SCHAEFFLER



Rolling Bearings

Technical principles and product data for the design of rolling bearing arrangements

SCHAEFFLER

§ Although we have prepared and checked all of the data in this catalogue with a great deal of care, we cannot guarantee 100% accuracy. We reserve the right to make corrections.

This catalogue is intended for general information only, in order to make reference to our product range. In particular, it neither serves as technical advice nor as guidance, and the illustrations and descriptions contained herein should not be regarded as assured product characteristics.

The continuous availability of the described products cannot be guaranteed. We also reserve the right to deliver comparable products to those described herein, where there is a phase-out or changeover of production, provided that:

- There are only negligible technical deviations from the description provided here
- The other product is, in abstract terms, at least equivalent in quality
- The change is also reasonable to you as the customer in all other respects, taking account of our interests

✎ *Issuer, copyright*

© Schaeffler Technologies AG & Co. KG

All rights reserved.

Reproduction, distribution and translation of this publication – in whole or in part – are only permitted with the written permission of the issuer and if the source is indicated.

January 2020. Older catalogue versions will be completely replaced by this version.



Rolling Bearings

Technical principles and product data for the design of rolling bearing arrangements

Contents



Foreword 6
1 X-life 10
2 ***medias*** *professional* 12
3 BEARINX 14
4 Criteria for bearing selection 17

Technical principles 32

1 Load carrying capacity and life 34
2 Rigidity 54
3 Friction and increases in temperature 56
4 Speeds 64
5 Noise 69
6 Lubrication 70
7 Bearing data 97
8 Design of bearing arrangements 141
9 Sealing of bearing positions 185
10 Mounting and dismounting 194

Product range A 212

Deep groove ball bearings 212
Angular contact ball bearings 282
Four point contact bearings 350
Self-aligning ball bearings 370
Cylindrical roller bearings 412
Tapered roller bearings 560
Barrel roller bearings 650
Spherical roller bearings 674
Needle roller and cage assemblies 820
Drawn cup needle roller bearings 848
Needle roller bearings 876
Drawn cup roller clutches 972
Sealing rings 990

Product range B 1004

Axial deep groove ball bearings 1004
Axial cylindrical roller bearings 1038
Axial needle roller bearings 1062
Axial spherical roller bearings 1080
Crossed roller bearings 1106
Super precision bearings 1140
Track rollers 1362
Radial insert ball bearings 1436
Bearing housings 1554
Fasteners and retainers 1678
Rolling elements 1736
Other products 1744
Product index 1786

Foreword

Schaeffler provides trendsetting solutions for Industrial and Automotive applications

Schaeffler is a leading worldwide supplier of rolling bearings, spherical plain bearings, plain bearings, linear products, accessories specific to bearings and comprehensive maintenance products and services. We have in excess of 40 000 catalogue products manufactured as standard, providing an extremely wide portfolio that gives secure coverage of applications from all 60 designated industrial market sectors.

Keys to success

The central factors responsible for this success are our outstanding strength in innovation, our global focus on local customer proximity, highly developed manufacturing methods, extremely high quality standards in all processes and our ability to transform specific customer requirements quickly and accurately into cost-effective solutions. Against this background of expertise, knowledge and experience together with our wide range of catalogue items, we see ourselves as a high performance, customer focussed partner.

Research and development

Research and development as a global approach

As a company looking to the future, we are especially active in the field of research and development. The key areas in this respect include not only research into fundamental principles, materials technology, tribology and calculation but also extensive inspection and test methods as well as activities to optimise manufacturing technology. This is oriented towards ensuring the continuous development, improvement and application of our products in the long term. We carry out research and development on a global basis. Our development centres are linked with each other worldwide and are thus in a position to exchange current information on a very short timescale as well as access and communicate the most recent data. This ensures that a uniform level of knowledge and information is available worldwide.

Innovations – progressive and future-oriented

With more than 2 300 patent applications a year and over 24 000 active patents and patent applications, Schaeffler ranks second among Germany's most innovative companies, according to the German Patent and Trademark Office. This makes us one of the most innovative leaders in the industry.



1 *Rolling bearings for the machine generation Industry 4.0 – measurable added value through the digital functional expansion of products*

Quality

Quality – precise and reliable

Our manufacturing expertise and holistic quality management system ensure a level of product quality that far exceeds the industry average. “Zero defects” is our objective. We have matched all our processes to this target. In addition, our many years of experience in forming, forging, heat treatment, surface technologies, grinding, honing and assembly ensure that our products fulfil the high quality level.

Numerous awards for Schaeffler products

Ongoing quality inspections are a defined component of the manufacturing process. These are integrated as a feedback function in the manufacturing process. As a result, all products continuously fulfil the same high standard of quality. This high standard of quality is verified by numerous awards and certificates to international standards.

All Schaeffler locations worldwide are certified in accordance with DIN EN ISO 9001:2008, ISO/TS 16949:2009. With the validation and certification of our manufacturing sites, we are taking a pioneering role in environmental protection. All larger manufacturing sites are certified to ISO 14001 and are also validated in accordance with the more stringent EC ECO Management and Audit Scheme (EMAS).

2
Inner ring of a spherical roller bearing under quality control

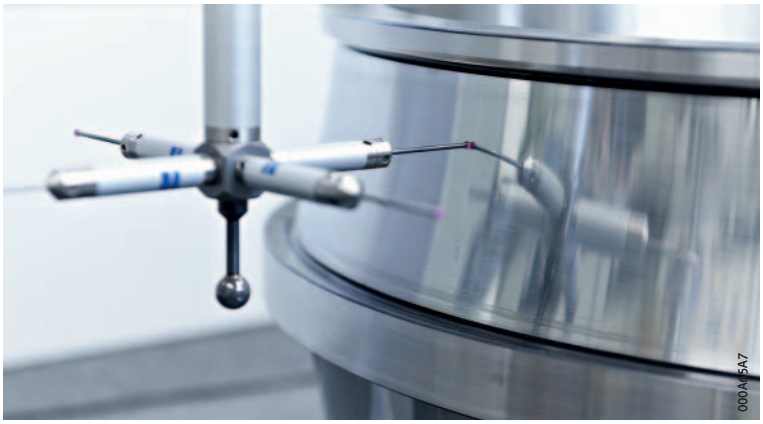

Worldwide presence

Close proximity to the customer worldwide in engineering and production

Close proximity to our customers is just one of the defining characteristics of Schaeffler. With around 170 locations worldwide, we are right there where our customers need us. We offer engineering, production and service on the ground, in the region and for the region. Together with our customers, we develop exactly those solutions that precisely fulfil the necessary functions and thus contribute to perfect meshing of all the components. In this way, our individually applied know-how sustainably supports the valuable brand promise of our customers. Our manufacturing locations provide seamless supply through short response times and customer-oriented service.

3
Schaeffler locations worldwide

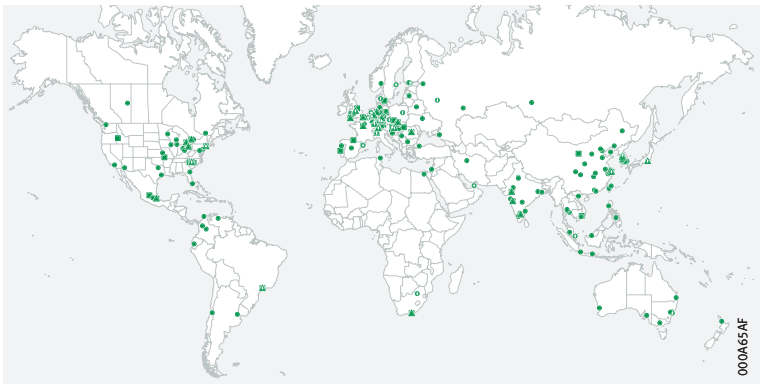

Product Catalogue HR 1

Rolling Bearing Catalogue HR 1 – the Engineering Compendium

Catalogue HR 1 is a fundamental information, selection and advisory tool for technical issues relating to the wide-ranging field of rotary rolling bearings. Since its first appearance, it has become established worldwide as an important engineering compendium for the calculation and design of rolling bearing arrangements. It describes the rolling bearings in accordance with DIN EN ISO that are required for original equipment manufacture, distribution and the aftermarket, specific rolling bearing accessories and further rolling bearing types and design variants. It shows which products can be considered for a bearing arrangement, the factors that must be taken into consideration in the design, the tolerances required on the adjacent construction and how the bearing arrangement is sealed. It gives detailed information on the calculation of bearing rating life, on temperatures and loads, on the lubricants that are most suitable for the bearing arrangement and, last but not least, on the correct mounting and maintenance of the products.

The catalogue has been completely revised

The catalogue has been completely revised in comparison with the previous valid edition. The emphasis in this revision was not simply on the updating of technical information and the inclusion of new products, but also on achieving the best possible ease of use for our customers. Among the volume of changes, the following examples can be given: as far as possible, the chapters now have the same structure. As a result, information applicable to multiple chapters is easier to find. Pictograms give simpler navigation within the book and contribute to better understanding of the data and descriptions. Selection matrices at the start of the product chapters provide clear and concise information on specific product features, thus allowing the designer to quickly make a preliminary assessment of whether the bearing is fundamentally suitable for the envisaged application. In terms of the sequence of information, the structure of the dimension tables now follows standard practice in the design of a rolling bearing arrangement. Links make reference to relevant electronic media and lead directly there.

Current level of technology and manufacture

The data in the catalogue represent the current level of technology and manufacture as of June 2018. They reflect not only progress in rolling bearing technology but also the experience gathered from numerous applications. Any data in earlier publications that do not correspond to the data in this catalogue are therefore invalid.

Benefits to you

Catalogue HR 1 stands for pioneering bearing arrangement technology, application-focussed representation, the highest product and performance density and continuous development. The benefits to you:

- Selection of products from a vast product range
- Maximum benefit, since the most suitable product is used in the right place
- Extensive worldwide product availability
- Short delivery times
- Long-term supply capability
- Security of planning for the long view
- Simplified stockholding
- Market-competitive prices
- Global service
- Comprehensive, application-focussed advice

This catalogue essentially describes standard products. Since these are used in numerous applications, we cannot make a judgement as to whether any malfunctions will cause harm to persons or property. It is always and fundamentally the responsibility of the designer and user to ensure that all specifications are observed and that all necessary information is communicated to the end user. This applies in particular to applications in which product failure and malfunction may constitute a hazard to human life.

Other product publications

Other technical publications

This catalogue contains a large proportion of the core rotary rolling bearing range of the brands INA and FAG. Furthermore, we develop and manufacture many other products and systems that are of significant interest in terms of technical progress and cost-effectiveness for rotary and linear bearing arrangements as well as for the automotive sector. These are covered in separate technical publications that can be obtained upon request.

Product ranges for specific market sectors

Special product ranges are available for specific market sectors. In addition to standard products, these also include special solutions. The range extends from simple, application-specific bearings via complete, ready-to-fit systems to special solutions that can be used to fulfil the most complex bearing technology requirements with high functional security and cost-effectiveness. Contact our Application Support Service at the earliest possible stage and benefit from the broad knowledge and considerable experience of these specialists for your projects.

Mobility for Tomorrow

Our objective: to fulfil tomorrow's challenges in partnership with you

Globalisation, urbanisation, digitalisation, scarcity of resources and the growing demand for affordable mobility are leading to increasingly dynamic market requirements. As a leader in innovation and technology, we have been making an important contribution to the mobility of the future for many years. With our products and our knowledge, we can continue to fulfil the challenges of your market in relation to rolling bearing arrangements in partnership with you. To this end, this catalogue is
an important instrument.



4
Mobility of the future

1 X-life

X-life

Schaeffler X-life rolling bearings of the brands INA and FAG are products with a particularly high performance density, which are identified by the premium brand XL. Their enhanced quality and performance are not, however, a special additional technical feature, which is available as an optional addition to a standard bearing design, but are fundamentally the Schaeffler standard for these products.

World leader

With its extensive range of X-life bearings, Schaeffler is a leader in the premium products segment over comparable competitors.

The success of X-life is signified by four factors

The high performance standard of rolling bearings is achieved through the systematic use of state-of-the-art production techniques and extensive changes to the internal construction of the bearing ➤*10*|*1*.

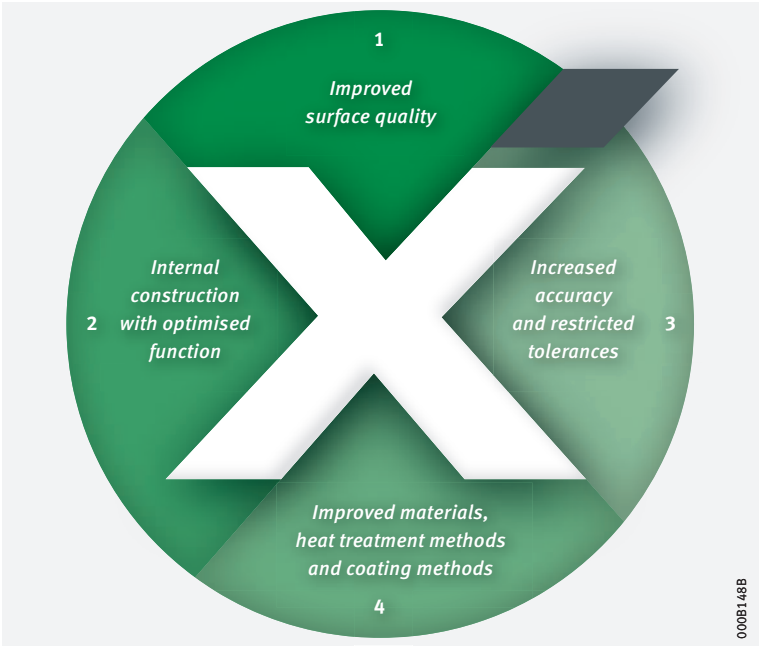

1
X-life premium quality, achieved by means of extensive technical enhancements to the products

The more favourable load distribution in the bearing results in a higher dynamic load carrying capacity

These design and production engineering measures lead to better and more uniform surfaces and contact zones, resulting in a considerable improvement in load distribution within the bearing and a significant reduction in frictional torque. This in turn leads to higher basic dynamic load ratings compared to the previous standard and thus to a longer bearing operating life ➤*10*|*2*.

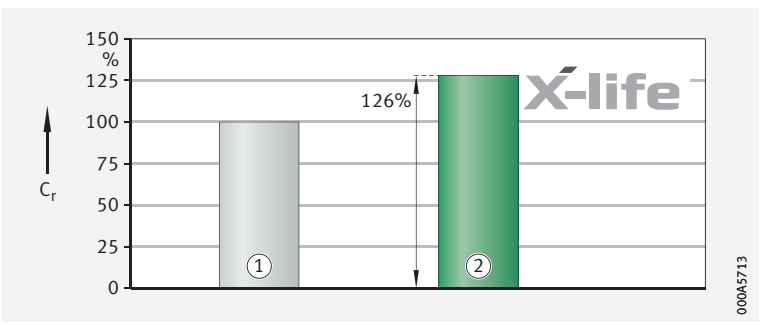

2
Cylindrical roller bearing with cage: comparison of basic dynamic load rating C_r with bearings without X-life quality

C_r = *radial basic dynamic load rating*

① *Bearing without X-life quality*
② *X-life cylindrical roller bearing*

1.1 Advantages for the user

Significantly increased customer benefits due to X-life

If a current standard bearing is substituted for an X-life bearing, this will give the designer a completely new level of design ➤*10*|*2* and ➤*11*|*3*:

- First of all, he will benefit from the longer bearing rating life and the extension of the maintenance intervals. This in turn improves the "Total Cost of Ownership" and the reliability of the specific machine or equipment.
- However, he can also use the higher basic load rating to place higher loads on the bearings, while achieving the same rating life.
- If he keeps to the old load and rating life, he can use a smaller bearing in place of the previous size and thus make the overall design more compact and lower in mass

Additional advantages

Other arguments in favour of using X-life bearings are their lower friction and lower noise levels, properties that are of central importance for many applications.

Lower operating costs, higher machine availability

In conclusion, X-life characteristics improve the overall cost-efficiency of a bearing position significantly and thus bring about a sustainable increase in the efficiency of the machine and equipment ➤*11*|*3*.

X-life rolling bearings in this catalogue include the suffix XL in the designation. The bearings are described in detail in the specific product chapters.

3
Extensive customer benefits of X-life

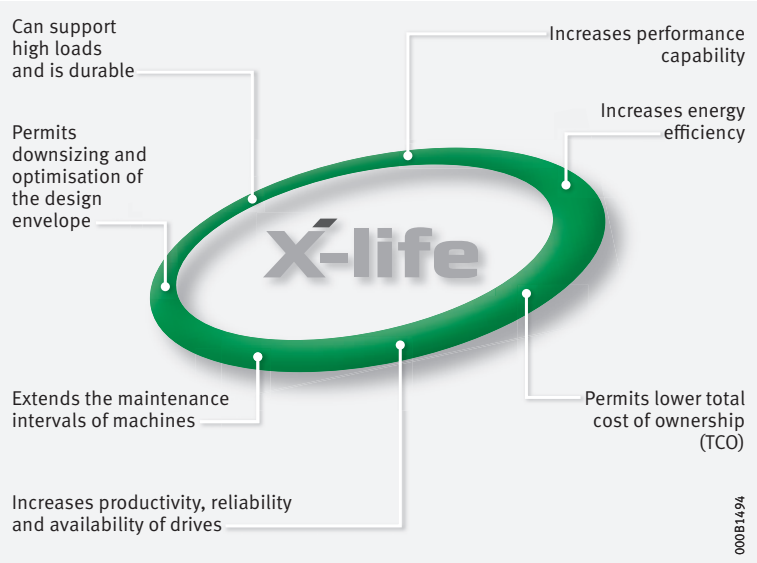

2 *medias professional*

✎ ***medias*** *can be used for dynamic selection of bearings for an application*

medias *professional*, the proven selection and information system, presents the INA and FAG catalogue products in electronic format. As with the printed catalogue, this gives our customers product information on both brands in a single data source. This saves time and gives easier handling.

✎ *The link to the program*

medias *professional* is available online; see link. The program is available in several languages, is easy to navigate and is particularly clear thanks to the use of numerous pictures, diagrams and models. There are also highly representative application examples, classified by market sector.

✎ ***medias*** *address*

medias *https://medias.schaeffler.com*

✎ *Expanded area of application*

Datasheets on the bearing series can be generated as PDF files. It includes a lubricant database and also the web2CAD link for direct download and inclusion of 3D models.

✎ *Calculations can be carried out quickly with* BEARINX

medias *professional* focusses on the individual bearing. The complete shaft can be simulated and any influences arising from its deformation on the bearings can be determined using the calculation program BEARINX. This program can also be made available to direct customers as BEARINX-online via the Internet (for conditions, see the INA/FAG homepage).

✎ *Comprehensive, reliable, fast, digital*

In conclusion, ***medias*** *professional* is a comprehensive, reliable system to help you help yourself answer many questions on rolling bearing technology by electronic means, quickly and at any location.

2.1 *medias*

✎ *Product characteristics, design envelope and basic load ratings*

The ***medias*** homepage guides the user dynamically by means of the product characteristics to delimitation according to design envelope and/or basic load ratings through to selection of the suitable rolling bearing from predetermined designs ➤*12*|🗀*1* to ➤*13*|🗀*4*.

🗀***1***
medias *homepage*

Rapid bearing selection by means of dynamic method

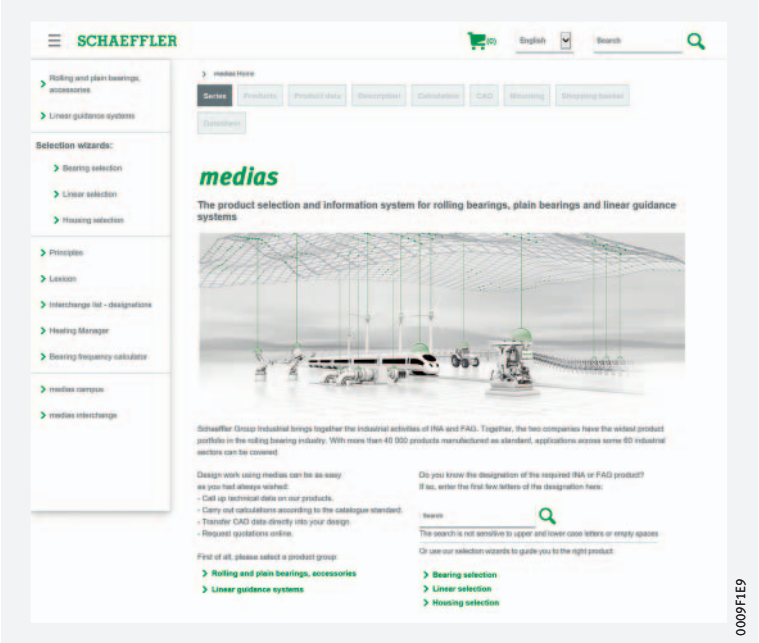

2

Bearing selection in accordance with product characteristics

Load directions, angular defects and misalignments (dynamic, static), sealing, corrosion protection etc.

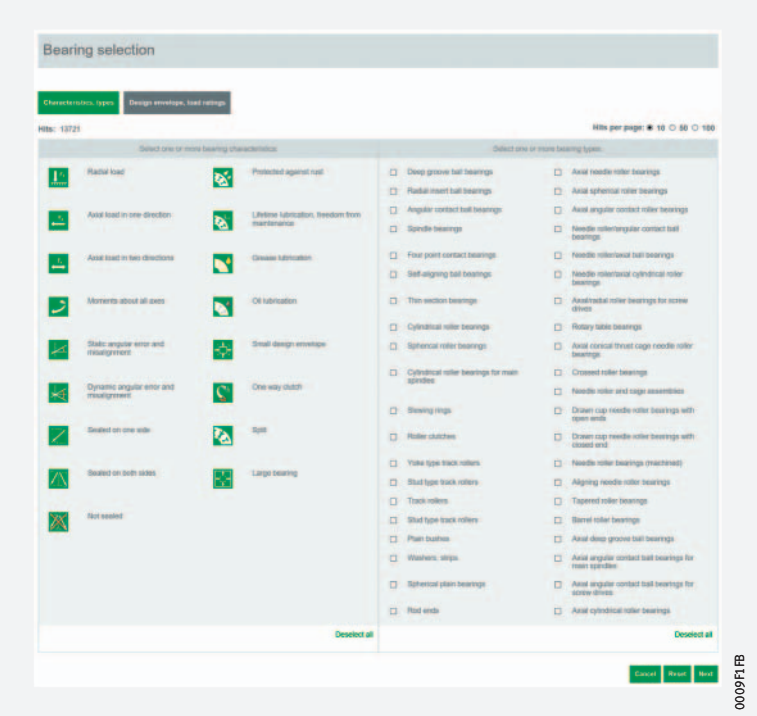

3

Input of data relating to dimensions and basic load ratings

Bore diameter, outside diameter, width, basic load ratings



4

Input of data relating to dimensions and basic load ratings

Stepwise process with the aid of wizards leads to the required bearing

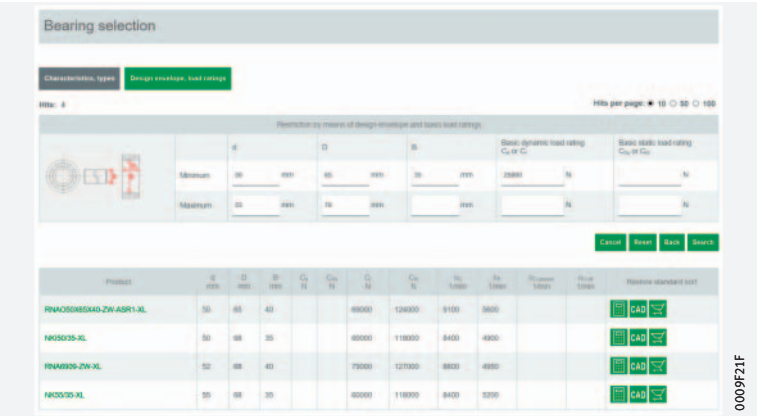

3 BEARINX

BEARINX is one of the leading programs for the calculation of rolling bearings. The program was developed at Schaeffler at the beginning of the 1990s and is a powerful tool for the design of rolling bearing arrangements in complex systems, starting from shaft and linear guidance systems through to sophisticated gearboxes ➤14|1 and ➤15|2. The bearings are not considered in a simple rigid, isolated form using reference conditions but at the location in the calculation model with the elasticities, loads and displacements that the complete system exerts on the bearing position.

In the in-house version, the detailed analysis options are available worldwide to every Schaeffler engineer. In line with the current status of standardisation, the adjusted reference rating life is calculated in accordance with ISO/TS 16281 and DIN 26281.

Values taken into consideration in calculation using BEARINX

The calculation models take account of factors including:

- the nonlinear, elastic deflection behaviour of every individual rolling contact
- the elastic behaviour of shafts and housings (FE influencing factor matrices can be incorporated)
- the influences of fit, temperature and speed on the operating clearance or preload of the bearings and on contact angle
- the profiles of rollers and raceways or raceway osculations
- the actual contact pressure taking account of the misalignment and profiling of rolling elements
- the influence of lubrication, contamination and actual contact pressure on the fatigue life

1
Manual automotive gearbox in elastic housing

Source: General Motors

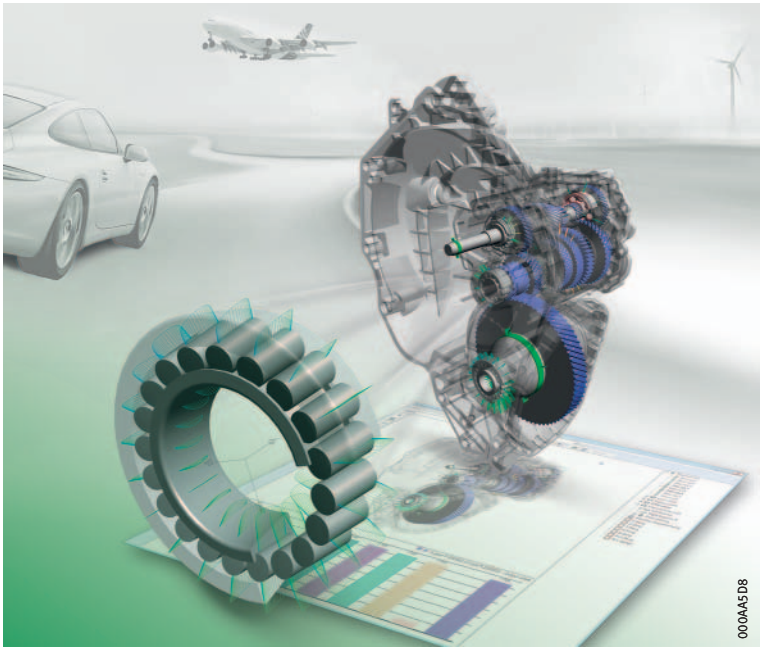

Further calculation possibilities with BEARINX

Optional calculation options, including:
- frictional torque calculation
- rotor dynamics
- export options, for example to BEARINX-MAP (three-dimensional bearing maps for further processing in MBS programs)

Documentation of the results

Comprehensive documentation of results with diagrams, tables, graphics and animations of the model allow appropriate presentation of the design to the customer.

3.1 BEARINX customer versions

Customer versions: calculation modules derived from the in-house version

In order that selected customer groups can assure themselves of our calculation possibilities in BEARINX and can be included intensively and at an early stage as a development partner in product development, Schaeffler makes available calculation modules derived from the in-house version *https://www.schaeffler.de/Calculation*:

Calculation possibilities matched to various target groups

- BEARINX-online Easy Module for “everyone”
  - BEARINX-online Easy Linear
  - BEARINX-online Easy Friction
  - BEARINX-online Easy Linearsystem
  - BEARINX-online Easy Ballscrew
  - BEARINX-online Easy RopeSheave
  - BEARINX-online Easy EMachine
  - BEARINX-online Easy Pump
- BEARINX-online calculations for Schaeffler customers, sales partners and colleges
  - BEARINX-online Shaft Calculation
  - BEARINX-online Spindle Calculation
  - BEARINX-online Linear Calculation
- BEARINX-VIP as a local version for development partners

When finalising the design, it is recommended that the in-house version should be used in order to benefit from the advisory and calculation services of Schaeffler.

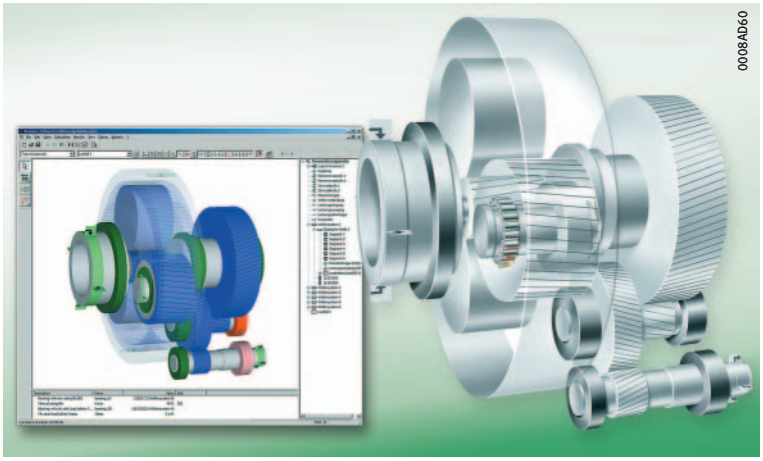

2
Calculation of a planetary gearbox for a wind turbine using BEARINX

Can be used free-of-charge by colleges

Colleges in particular can benefit from our offering, since BEARINX-online calculations can be made available free of charge for educational purposes.

Information about the customer versions and the possibility of applying for registration/usage can be found on the Schaeffler Internet portal at: *https://www.schaeffler.de/Calculation*

3.2 BEARINX-online Shaft Calculation

The customer himself can model and investigate complex shaft systems

The customer version used most often is the BEARINX-online Shaft Calculation ➤16|3. It is derived from the system level of the in-house version and offers the customer the possibility of modelling coaxially nested shaft systems himself online and analysing variants.

As in the case of the in-house version, BEARINX-online Shaft Calculation makes it possible to determine precisely the load distribution in the rolling bearing, taking account of shaft deflection and the nonlinear deflection behaviour of the rolling contacts.

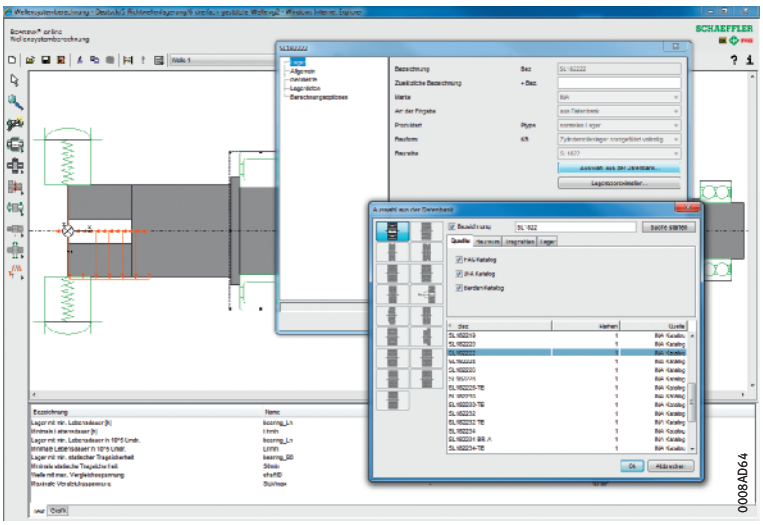

3 *Shaft calculation and bearing selection with BEARINX – screen representation*

Bearing selection is carried out by means of a product database to which BEARINX is linked

The BEARINX customer versions access a bearing database which holds all catalogue bearings of the Schaeffler brands. Special bearings are available by agreement. The internal component data, which are stored in non-viewable form, are incorporated in the rating life calculation. As a result, the quality of the calculation results is significantly higher than those of a bearing approximation, since the profile data not only of the raceways but also of the rolling elements are taken into consideration.

Extract from the performance portfolio of online shaft calculation using BEARINX

BEARINX-online Shaft Calculation – an overview:

- Simple modelling of shaft systems with the aid of wizards
- Calculation of the adjusted reference rating life in accordance with DIN 26281 (ISO/TS 16281)
- Results documentation can be stored locally
- Graphical representation of shaft reactions (shaft deflection and shaft inclination)
- Calculation of bearing rigidity at the operating point (optional)
- Rigid and elastic adjustment of bearings in the relevant shaft system
- Operating clearance calculation by means of wizards

§ Use is regulated by contract and requires initial participation in a training course and payment of a fee to cover costs. No maintenance or licence fees are incurred.

The calculations are performed online. There is no need for installation at the customer. The application files are stored for each customer in a separate directory on a powerful calculation server. Where necessary, application files can be interchanged: the customer can request checking of his calculation model or, vice versa, the Schaeffler engineering service can provide an application file or a special bearing.

4 Criteria for bearing selection

4.1 Features of individual bearing types

HR 1 contains an extensive range of bearing types

The Schaeffler catalogue HR 1 describes a multitude of bearing types, from which the designer can choose the one that best suits his needs. Due to the variety of applications and the different influences on the bearing position, it is not, however, possible to give generally applicable rules here for the selection of the bearing type. When deciding on a specific bearing type, it is often necessary to weigh up several criteria.

Factors that are usually important in the selection of bearings

The aim of the following descriptions is to assist the designer. They make reference to factors that play a primary role in the selection of the bearing type. More precise data on the individual bearing types, their characteristics and the available designs can be found in the specific product chapters.

Product matrix

Important features of the bearing types are described in an overview in the matrix ➤ *30* | *1*.

Criteria for selection of bearing type

Product characteristics that can play a role in selection of the bearing type are, for example:

- the available design envelope ➤ *18*
- the load values, load directions and the bearing arrangement concept (arrangement of the bearings) ➤ *20*
- the speeds of the bearings ➤ *24*
- the accuracy of the bearings ➤ *24*
- the axial displacement capability of the bearing rings (non-locating bearing function) ➤ *25*
- the compensation of misalignments ➤ *26*
- quiet running ➤ *27*
- the rigidity of the bearing arrangement ➤ *28*
- the friction in the bearings ➤ *28*
- the mounting and dismounting of the bearings ➤ *28*
- the sealing of the bearings and of the bearing position
- the lubrication of the bearings

This catalogue does not give the entire range of Schaeffler rolling bearings. Dedicated catalogues and technical descriptions are generally available for products which are not described here. These publications can be requested from Schaeffler: *https://www.schaeffler.de/std/1D51*.

4.2 Comparison of design envelope for particular bearing types

In many applications, it is frequently the case that one of the main dimensions of the rolling bearing is fixed by the overall design of the machine or piece of equipment. Due to the strength specifications of the shaft, this is generally the bore diameter of the bearing.

Bearings for small and large shaft diameters

For small shaft diameters, suitable bearings are ball bearings (especially deep groove ball bearings) and needle roller bearings. Where large diameters are present, the bearings available are cylindrical, tapered and spherical roller bearings, as well as deep groove ball bearings, but not excluding needle roller bearings.

Comparison of cylindrical roller bearings

A load carrying capacity of approximately the same magnitude can be achieved both with bearings that are narrow and have a large outside diameter and also with bearings that are wide and have a smaller outside diameter.

1
Cylindrical roller bearings with approximately comparable basic load rating C_0

SL183026 has a full complement roller set

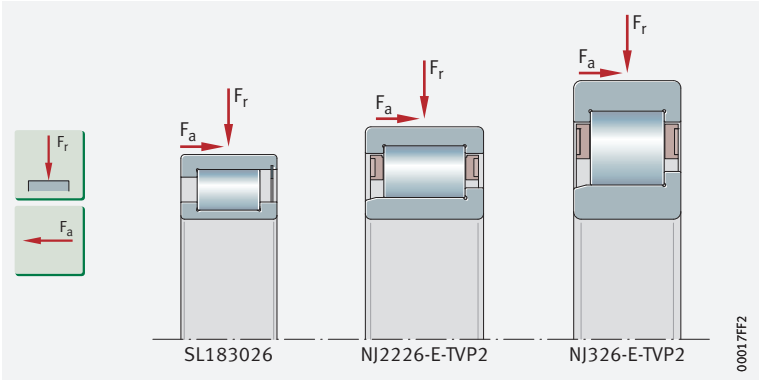

Bearings with small cross-sectional height

Low cross-sectional height and high load carrying capacity

If the design envelope is restricted in a radial direction – for example in high performance gearboxes for vehicles – bearings with a small cross-sectional height such as roller and needle roller and cage assemblies, drawn cup needle roller bearings with or without an inner ring, are particularly suitable ➤ *18* | *2*. These bearings have high radial load carrying capacity due to the line contact with low section height.

2
Bearings with small cross-sectional height – comparison of radial section height

① *Needle roller and cage assembly*
② *Drawn cup needle roller bearing with open ends*
③ *Needle roller bearing without inner ring*
④ *Needle roller bearing with inner ring*

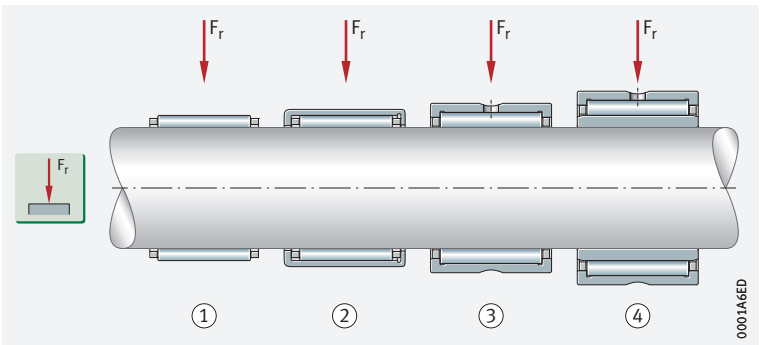

Bearings with small axial design envelope and combined load

Bearings for small axial design envelope and combined load

If the design envelope is small in an axial direction, the bearings suitable for bearing positions subjected to radial and axial load are certain series of cylindrical roller bearings – e.g. semi-locating bearings NJ in conjunction with deep groove ball bearings or combined needle roller bearings ➤19| 3 and ➤19| 4.

3
Semi-locating bearing for supporting axial forces in one direction in conjunction with a deep groove ball bearing

① *Cylindrical roller bearing NJ (semi-locating bearing)*
② *Deep groove ball bearing (locating bearing, functioning here as a semi-locating bearing)*

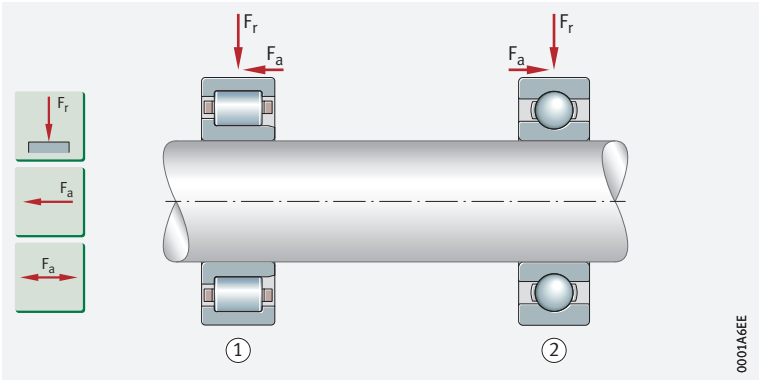

4
Combined needle roller bearings for supporting high radial forces and axial forces in one or both directions

① *Needle roller/axial deep groove ball bearing, without inner ring, without end cap for axial forces in one direction*
② *Needle roller/angular contact ball bearing with inner ring, for axial forces in both directions*

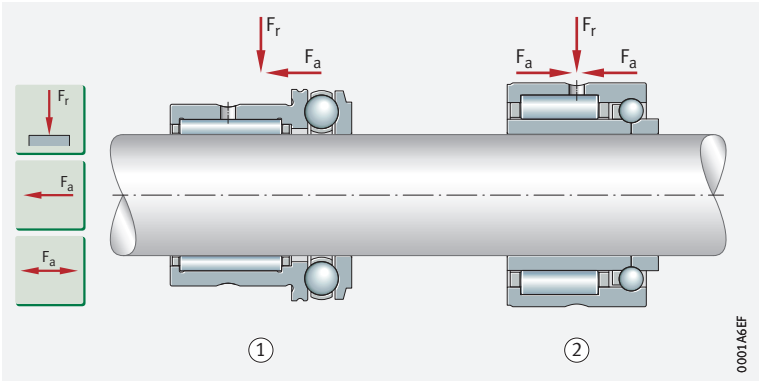

Bearings with pure axial load carrying capacity

Bearings for bearing arrangements under axial load only

If the bearing arrangement is under axial load only, suitable bearings are axial needle roller and axial cylindrical roller and cage assemblies, axial needle roller and axial cylindrical roller bearings and axial deep groove ball bearings with a small axial section height ➤19| 5.

5
Axial bearings – comparison of cross-sections

① *Axial needle roller and cage assembly*
② *Axial needle roller bearing*
③ *Axial deep groove ball bearing*
④ *Axial cylindrical roller bearing*

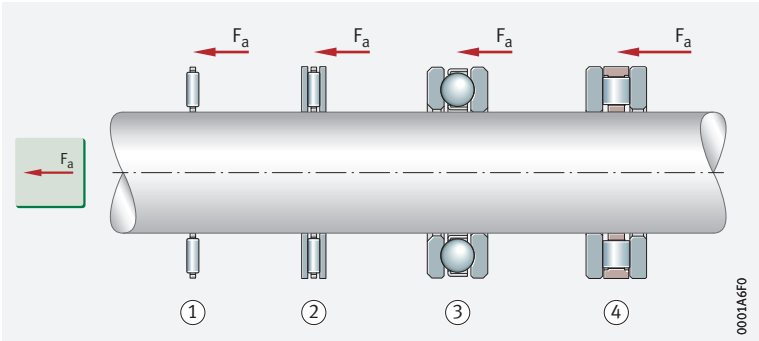

4.3 Load value and load directions

Influence of load on bearing type and bearing size

The load determines the type and size of the bearing

The bearing size is normally determined by the external load ➤20|6. In selection of the bearing, it must be noted that roller bearings can be subjected to higher loads due to the line contact than ball bearings of the same size.

6
Radial load carrying capacity – comparison of deep groove ball bearing/cylindrical roller bearing

① *Deep groove ball bearing – lower radial load carrying capacity*
② *Cylindrical roller bearing NU – higher radial load carrying capacity*

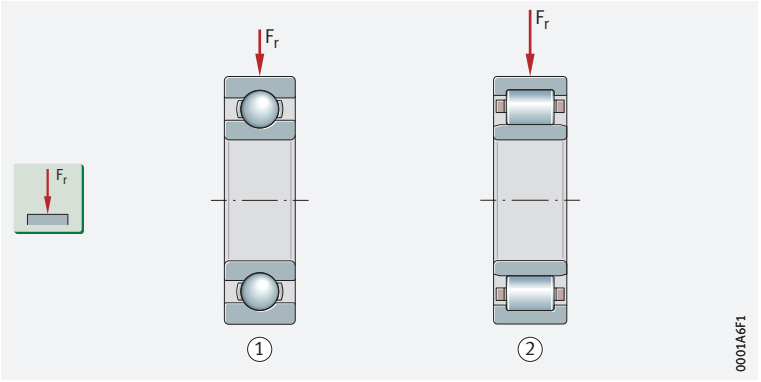

Bearings for predominantly radial loads

In the case of radial loads, the forces act perpendicular to the bearing axis

If radial loads (so-called transverse forces) are present – these are forces perpendicular to the longitudinal axis of the shaft – bearings are used that support exclusively or predominantly radial forces, which are therefore radial ball bearings and radial roller bearings.

Cylindrical roller bearings N and NU, needle roller and cage assemblies, drawn cup needle roller bearings with open ends and needle roller bearings can support radial forces only ➤20|7.

7
Radial bearings, bearings for predominantly radial load

① *Deep groove ball bearing, open*
② *Angular contact ball bearing*
③ *Cylindrical roller bearing NU*
④ *Tapered roller bearing*
⑤ *Spherical roller bearing*

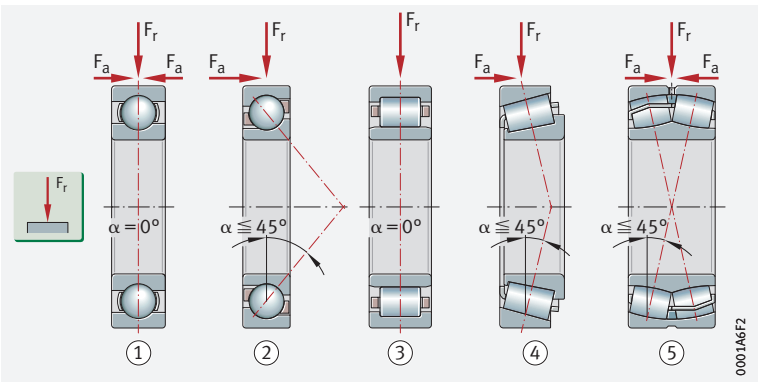

Bearings for predominantly axial loads

If mainly axial forces are present – these are forces in the direction of the longitudinal axis of the shaft – bearings are used that support exclusively or predominantly axial forces.

Low to moderate axial loads

If low to moderate pure axial loads are present, suitable bearings are axial deep groove ball bearings and four point contact bearings ➤*21*|*8*. If axial load in one direction is present, single direction axial deep groove ball bearings can be used.

Moderate to high axial loads

If moderate to high axial loads in one direction are present, the bearings available are axial needle roller bearings, axial cylindrical roller bearings, axial tapered roller bearings and axial spherical roller bearings ➤*21*|*8*. Axial cylindrical roller bearings or axial spherical roller bearings arranged adjacent to each other in pairs are suitable for high axial loads of alternating direction.

8

Bearings for predominantly axial load

① *Axial deep groove ball bearing, single direction*
② *Axial angular contact ball bearing, double row, double direction*
③ *Axial needle roller bearing, single direction*
④ *Axial cylindrical roller bearing, single direction*
⑤ *Axial spherical roller bearing*

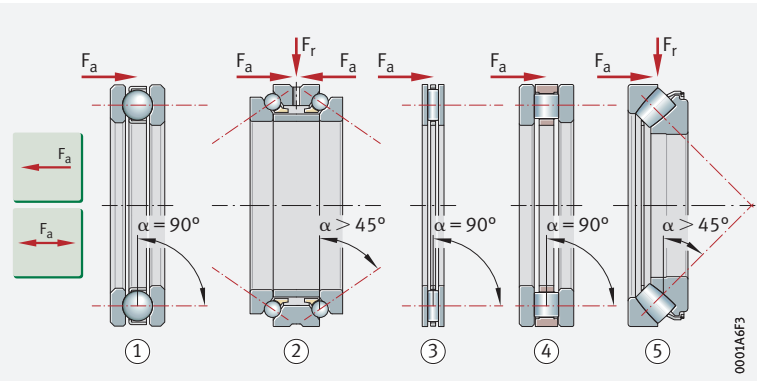

Bearings for combined loads

Certain rolling bearings can be subjected to combined loads (radial and axial).

The axial load carrying capacity of a bearing is determined by the nominal contact angle α. The greater this angle, the higher the axial load carrying capacity of the bearing. An indication of its axial load carrying capacity is also provided by the bearing-specific axial load factor Y in the product tables; the smaller this factor, the higher the axial load capacity.

Suitable bearings for combined load

Suitable bearings are deep groove ball bearings, four point contact bearings, single and double row angular contact ball bearings, spherical roller bearings and single row tapered roller bearings ➤*22*|*9*. Self-aligning ball bearings and cylindrical roller bearings NJ (semi-locating bearing) and NU (non-locating bearing) + L-section ring HJ (= semi-locating bearing unit) ➤*22*|*10* can also be used.

Axial loads present in one direction only can be supported by single row angular contact ball bearings and tapered roller bearings, cylindrical roller bearings NJ as well as NU + HJ and axial spherical roller bearings.
For alternating load directions, these bearings must always be mounted with a second bearing (the second bearing must provide support in the opposing direction). For mounting in sets, single row angular contact ball bearings as universal bearings and matched tapered roller bearing sets comprising two single bearings are available.

9
Bearings for combined load

① *Deep groove ball bearing*
② *Four point contact bearing*
③ *Single row angular contact ball bearing*
④ *Double row angular contact ball bearing*
⑤ *Tapered roller bearing*
⑥ *Spherical roller bearing*

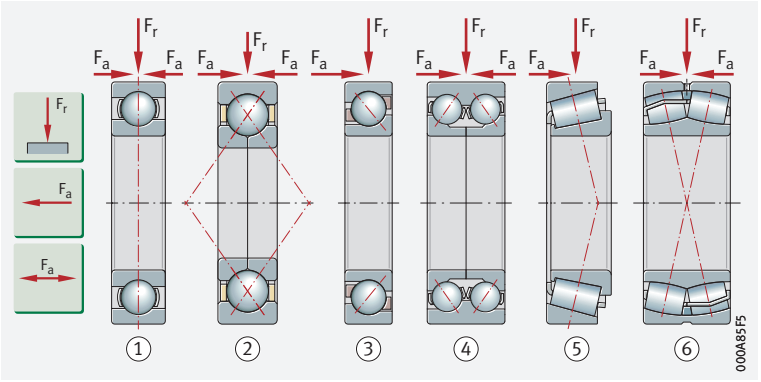
Fr
Fa
Fa
Fa
Fr
Fa
Fa
Fr
Fa
Fa
Fr

Bearings for supporting tilting moments

Moment load under eccentric force application

If a load acts eccentrically, the bearing is subjected to tilting moments. In addition to double row deep groove ball bearings and angular contact ball bearings, suitable bearings in this case are in particular the single row angular contact ball bearings or tapered roller bearings matched in and X or O arrangement ➤*23*|*12*.

12
Bearings for supporting tilting moments

M = *tilting moment*

① *Angular contact ball bearing, double row*

② *Angular contact ball bearing set, comprising two matched single row angular contact ball bearings, O arrangement*

③ *Tapered roller bearing set, comprising two matched single row tapered roller bearings, X arrangement*

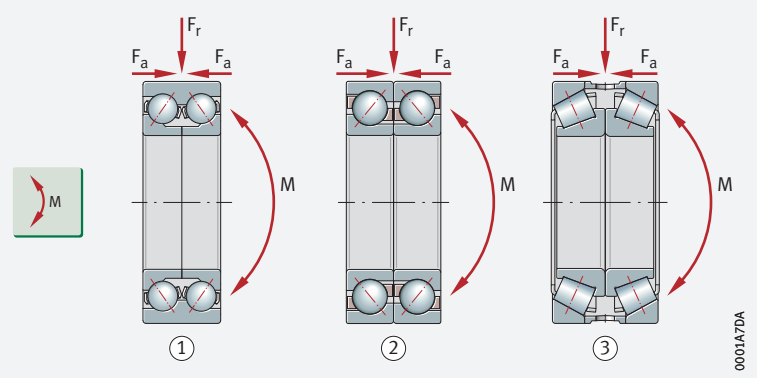

Double row deep groove ball bearing

In ➤*23*|*13*, the tilting moment produced by the eccentrically acting force F is supported by a double row deep groove ball bearing.

13
Unilateral bearing arrangement of shaft

M = *tilting moment*

F = *eccentrically acting radial force*

① *Deep groove ball bearing, double row*

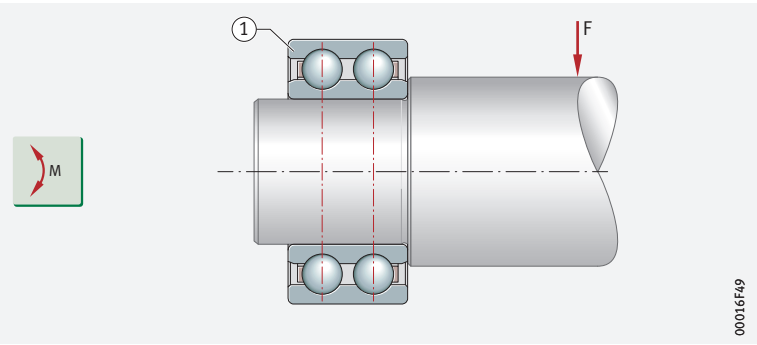

4.4 Speed suitability

Bearings for high and very high speeds

The permissible speed is restricted by the operating temperature

In general, the highest speed achievable by rolling bearings is determined by the permissible operating temperature. This is dependent on the frictional heat generated in the bearing, the heat introduced from external sources and the heat dissipated from the bearing arrangement. When conditions are in equilibrium, the bearing temperature is constant.

Bearings for very high speeds

The highest speeds are achieved by single row bearings with particularly low friction. Under pure radial load, these are open deep groove ball bearings, while under combined load they are angular contact ball bearings ➤*24*|*14*.

Due to their design, the permissible speeds for axial bearings are generally lower than those for radial bearings.

14
Bearings for high and very high speeds

① *Deep groove ball bearing, single row, open*
② *Angular contact ball bearing, single row, open*

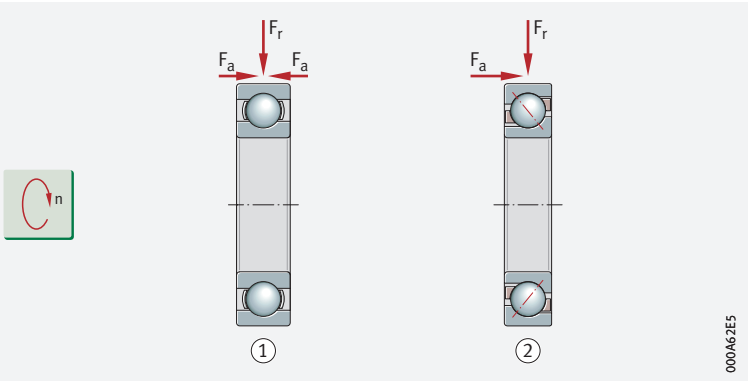

4.5 Accuracy

Bearings with increased accuracy

For most applications, the normal dimensional and running accuracy of rolling bearings is sufficient (tolerance class Normal). Where there are increased demands on running accuracy and in bearing arrangements with very high speeds, such as in the case of main spindles for machine tools, bearings with increased accuracy are necessary ➤*1140*.

4.6 Axial displacement facility

Compensation within the bearing

Axial displacement occurs within the bearing

A shaft is normally supported using a locating bearing and a non-locating bearing. The locating bearing gives tight axial guidance of the shaft in both directions. Non-locating bearings can be displaced in an axial direction and thus prevent the locating bearing and non-locating bearing from bracing against each other. In this way, non-locating bearings compensate for changes in axial length and thermal elongation ➤25 | 15.

15
Cylindrical roller bearing NU, non-locating bearing, length compensation within bearing

s = *axial displacement distance*

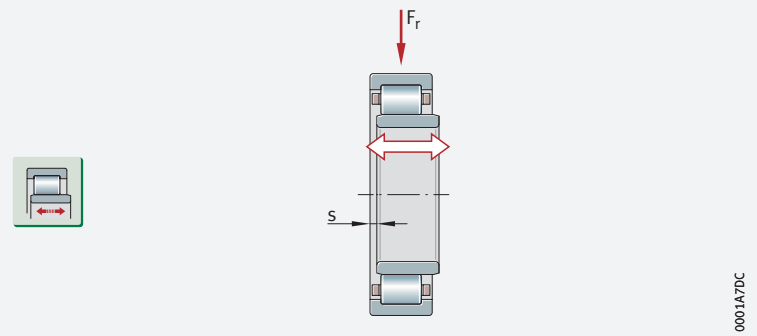

Suitable non-locating bearings for compensation within the bearing

Bearings suitable as non-locating bearings for compensations with the bearing include, in particular, cylindrical roller bearings NU and N with one ribless ring (inner or outer ring), cylindrical roller bearings NJ, some designs of full complement cylindrical roller bearings (SL bearings) and needle roller bearings ➤25 | 16.

16
Non-locating bearings for compensation within bearing

1. *Needle roller bearing*
2. *Cylindrical roller bearing NU*
3. *Cylindrical roller bearing N*
4. *Cylindrical roller bearing SL0248*

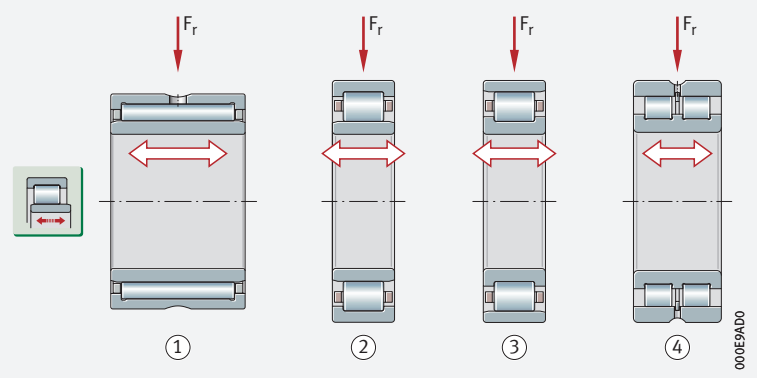

Compensation by means of sliding seat on a bearing ring

Non-separable bearings such as deep groove ball bearings and spherical roller bearings can also be used as non-locating bearings. However, one of the two bearing rings must then have a loose fit and must not be in axial contact, so that the relevant ring can be displaced on the seating surface ➤26|17.

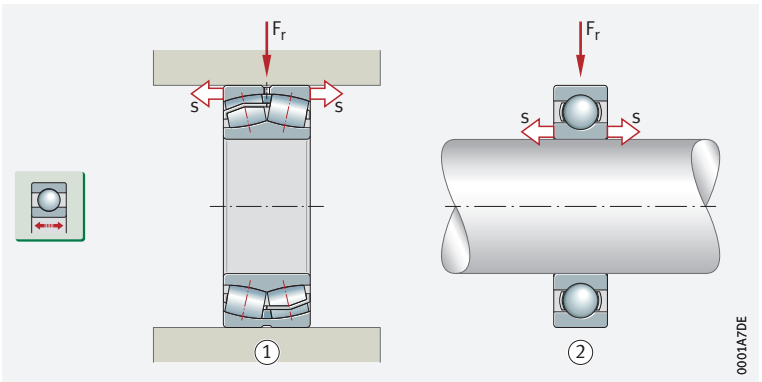

17
Length compensation by means of sliding seat

s = *axial displacement distance (loosely fitted bearing ring)*

① *Spherical roller bearing, outer ring capable of displacement (with loose fit)*

② *Deep groove ball bearing, inner ring capable of displacement (with loose fit)*

4.7 Compensation of misalignments

Skewing has a negative effect on bearing function and reduces the bearing operating life

If skewing occurs between the shaft and housing – for example if bearing seats are not aligned, the shaft deforms under load or the bearing positions are a considerable distance apart – this must be compensated by means of suitable bearings (self-aligning bearings). Misalignments should also be expected if individual housings, such as plummer block or flanged housings, are used. Similar effects (alignment inaccuracies of the bearing positions) are caused by angular defects between the radial seating surface and the lateral contact surface of a rolling bearing ring.

Self-aligning rolling bearings

The rings may only be swivelled while being simultaneously rotated, otherwise the raceways will be damaged.

Dynamic and static compensation of misalignments and angular defects

Misalignments and angular defects can be compensated within certain limits by means of self-aligning rolling bearings (see product chapter). These include bearings such as barrel roller bearings, spherical roller bearings, self-aligning ball bearings and axial spherical roller bearings ➤26|18. These bearings have a concave outer ring raceway in which the inner ring together with the rolling element set can swivel.

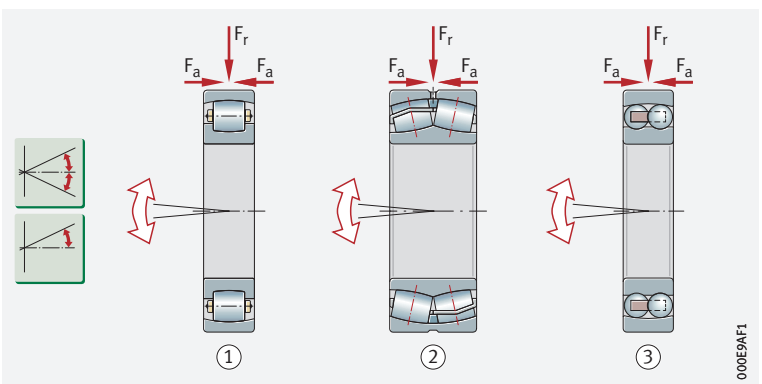

18
Bearings for static and dynamic adjustment motions

① *Barrel roller bearing*

② *Spherical roller bearing*

③ *Self-aligning ball bearing*

Bearings for compensation of static angular defects

Radial insert ball bearings and aligning needle roller bearings are suitable for static adjustment motions

Radial insert ball bearings and aligning needle roller bearings have a crowned (spherical) outer ring outside surface and can align themselves on the concave mating surface after mounting ➤27|19. These bearings are suitable for static adjustment motions. They must not, however, be used for dynamic adjustment motions, oscillating motions etc.

Axial deep groove ball bearings

Axial deep groove ball bearings cannot support tumbling motion of the shaft and therefore react with high sensitivity to angular defects.

Bearings with spherical housing locating washer

If the contact surface in the housing is not perpendicular to the rotational axis of the bearing, the angular defect can be compensated by means of axial deep groove ball bearings with a spherical housing locating washer and support washer ➤27|19.

19
Bearings for static angular defects (adjustment motions)

① *Radial insert ball bearing (radial bearing)*
② *Aligning needle roller bearing (radial bearing)*
③ *Axial deep groove ball bearing with spherical housing locating washer and support washer*

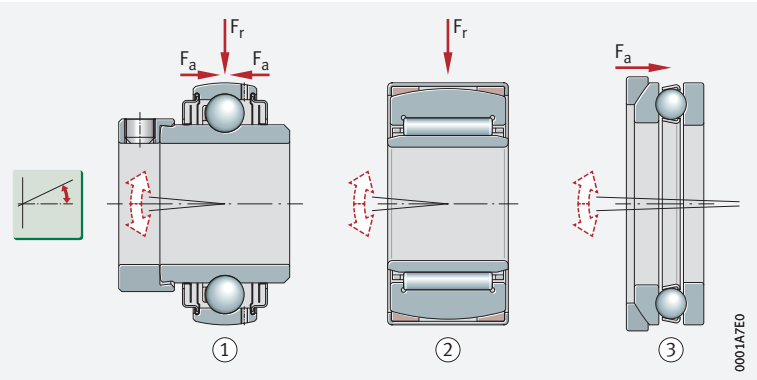

Self-alignment facility of deep groove ball bearings

Single row deep groove ball bearings have only a small self-alignment facility

In deep groove ball bearings, misalignments lead to unfavourable running of the balls and induce additional loads in the bearing that shorten the operating life of the bearing. In order to keep these loads at a low level, only small adjustment angles are therefore permitted as a function of the load for single row deep groove ball bearings.

Double row deep groove ball bearings cannot undergo angular motion. When using these bearings, therefore, misalignments are not permissible.

Self-alignment facility of cylindrical roller bearings, tapered roller bearings, needle roller bearings

The self-alignment facility is smaller than in the case of deep groove ball bearings

The self-alignment facility of cylindrical, tapered and needle roller bearings is smaller than that of deep groove ball bearings. The transverse form of the rolling elements and raceways of these roller bearings is designed such that, at the stated adjustment angles, the load on the material at the rolling contact is still uniform enough that the basic rating life is not impaired.

Where angular defects are larger than those indicated in the product chapters, rollers and needle rollers are no longer subjected uniformly to load over their full length. As a result, unacceptably high edge pressures may occur.

4.8 Quiet running

Deep groove ball bearings have very low running noise

In small electrical devices, such as office equipment or household applications, low running noise is often required. Deep groove ball bearings are particularly suitable for such requirements ➤24|14. A noise evaluation of the series is permitted by means of the Schaeffler Noise Index ➤69. It is advantageous to apply axial adjustment to the bearings, for example by means of disc springs.

4.9 Rigidity

Roller bearings are more rigid than ball bearings

The rigidity of a rolling bearing is determined by the type, bearing size and operating clearance. The rigidity increases with the number of rolling elements supporting the load. A particularly high level of system rigidity is the objective, for example in main spindle bearing arrangements and rotary table bearing arrangements in machine tools and in pinion bearing arrangements.

The rigidity of roller bearings is higher, due to the contact conditions between the rolling elements and raceways (line contact), than the rigidity of ball bearings.

4.10 Friction

Bearings with low bearing friction

In addition to the introduction and dissipation of heat, the decisive factor for the operating temperature of a bearing arrangement is bearing friction. Bearings with particularly low friction include open deep groove ball bearings, single row angular contact ball bearings and cylindrical roller bearings with cage under radial load ➤*20*|*7* and ➤*24*|*14*. Comparatively high friction is generated in bearings with contact seals, full complement cylindrical roller bearings and axial roller bearings.

4.11 Mounting and dismounting

Separable (non self-retaining) and non-separable bearings

In the case of separable bearings, the bearing rings can be mounted independently of each other

Bearings that are not self-retaining simplify the mounting and dismounting of bearings, since the bearing parts can be mounted individually. This is also an advantage if both rings have a tight fit. Separable bearings include four point contact bearings, double row angular contact ball bearings with a split inner ring, certain cylindrical roller bearings, tapered roller bearings, axial deep groove ball bearings, axial spherical roller bearings, axial cylindrical roller bearings and certain needle roller bearings ➤*28*|*20*.

20
Separable bearings

① *Cylindrical roller bearing NU*
② *Tapered roller bearing*
③ *Axial deep groove ball bearing*

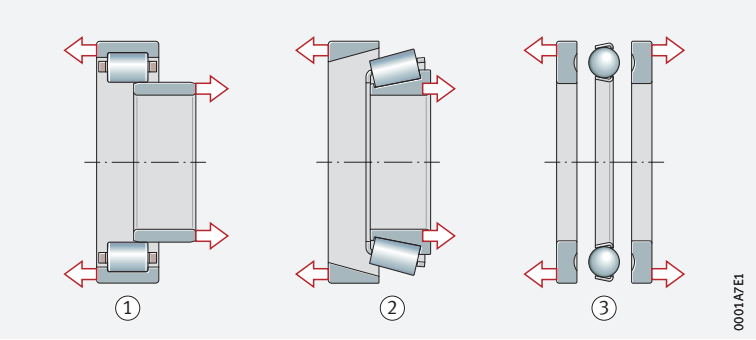

Non-separable bearings

Deep groove ball bearings, single row angular contact ball bearings, self-aligning ball bearings, barrel roller bearings and spherical roller bearings are not generally separable.

Bearings with tapered bore

With a tapered shaft seat, the radial internal clearance in the bearing can be set to a defined value

Mounting and dismounting of bearings can be aided by means of adapter and withdrawal sleeves

Bearings with a tapered bore can be mounted directly on a tapered shaft seat, for example in the case of single row and double row cylindrical roller bearings of a high precision variant. During mounting of these bearings, the radial internal clearance can be set to a defined value.

Where the requirements for running accuracy are low, adapter and extraction sleeves can be used to locate self-aligning ball bearings, barrel roller bearings and spherical roller bearings with a tapered bore on a cylindrical shaft seat in particular ➤29| 21. The mounting and dismounting of such bearing arrangements is particularly simple.

21
Bearings with tapered bore, adapter and withdrawal sleeve

① *Cylindrical roller bearing, double row*
② *Self-aligning ball bearing with adapter sleeve*
③ *Spherical roller bearing with withdrawal sleeve*

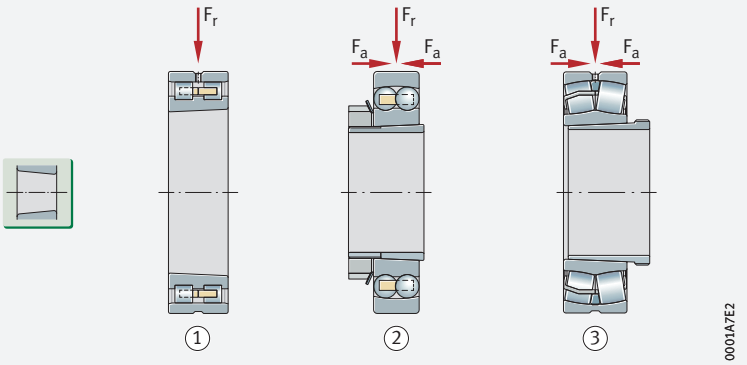

4.12 Matrix for preselection of bearing type

Suitable for an initial preliminary assessment

The matrix shows the features and characteristics of common bearing types ➤30| 1. It can used to make an initial preliminary assessment of whether the selected bearing is suitable for the application.

Limits of the matrix

If the focus is on criteria that cannot be resolved using the matrix, technical advice should be sought from Schaeffler. This also covers new types of bearing arrangements where relevant experience is not available or is insufficient, or where applications run under extreme operating conditions, high safety requirements apply or a possible risk to personal safety is involved.

When using the matrix, it must also be taken into consideration that certain characteristics are not dependent exclusively on the bearing type. For example, the preload of a tapered roller bearing arrangement may influence the rigidity of the bearing arrangement. This cannot, however, be derived from the matrix. A similar situation is present in the case of spindle bearings for the support of main spindles in machine tools. Depending on whether the bearings are designed with steel or ceramic balls, the preload may increase at very high speeds due to the high centrifugal forces in the bearing – the centrifugal forces act on the rolling elements and change their position in the bearing. In hybrid bearings – bearings with ceramic balls – this effect is far less pronounced than in bearings with steel balls.

In selection of the bearing type, attention must also be paid to the work involved in mounting and dismounting of the bearings, the costs of the bearing arrangement and the availability of the bearings. Decisions cannot be made on these points by means of the matrix.

1 Bearing types, designs and characteristics

The matrix gives an overview of the types and design features of rolling bearings.

It can be used to make a preliminary assessment of whether a bearing is fundamentally suitable for the envisaged application.

The additional information provided in the product chapter and in the Technical principles must, however, be observed in addition to this overview in selection of the bearing.

+++ extremely suitable
++ highly suitable
+ suitable
(+) suitable with restrictions
– not suitable/not applicable
✓ available

Design features and suitability			Radial bearings				
			Deep groove ball bearings	Angular contact ball bearings	Four point contact bearings	Self-aligning ball bearings	Radial insert ball bearings
Load carrying capacity	radial		++	++	(+)	++	+++
	axial, one direction		++[1]	++	++	(+)	+
	axial, both directions		++[1]	++	++	(+)	+
	moments		+[1]	++[1]	(+)	–	++
Compensation of angular misalignments	static		(+)[1]	–	–	+++	+++
	dynamic		(+)[1]	–	–	+++	–
Bearing design	cylindrical bore		✓	✓	✓	✓	✓
	tapered bore		–	–	–	✓	–
	separable		–	✓[1]	✓	–	–
Lubrication	greased		✓[1]	✓[1]	–	✓[1]	✓
Sealing	open		✓	✓	✓	✓	–
	non-contact		✓[1]	✓	–	–	✓
	contact		✓[1]	✓	–	✓[1]	✓
Suitability for	high speeds		+++[1]	+++[1]	(+)	+	++
	high running accuracy		++	++[1]	(+)	–	(+)
	low-noise running		+++	++	(+)	(+)	+
	high rigidity		+	++	+	(+)	+
	low friction		+++	++	+	++	(+)
	length compensation within bearing		–	–	–	–	–
	non-locating bearing arrangement		+	+	–	+	++[1]
	locating bearing arrangement		++	+++[1]	++	+	++
X-life bearings			–	✓[1]	✓[1]	–	✓[1]
Bearing bore[1][2] d in mm	from		2	5	17	5	12
	to		260	180	200	150	120
			212	**282**	**350**	**370**	**1436**

1) *Certain bearing designs.*

2) *Alternatively, inside diameter in bearings without an inner ring.*

	Radial bearings									Axial bearings				
	Cylindrical roller bearings, non-locating	Cylindrical roller bearings, semi-locating	Cylindrical roller bearings, locating	Tapered roller bearings	Barrel roller bearings	Spherical roller bearings	Needle roller bearings, machined, drawn cup, cages	Combined needle roller bearings	Crossed roller bearings	Axial deep groove ball bearings	Axial cylindrical roller bearings	Axial needle roller bearings	Axial spherical roller bearings	
	+++	+++	+++	+++	+++	+++	+++	+++	++	–	–	–	+	F_r
	–	+	+	+++	+	++	–	+++[1]	+++	++	++	++	+++	F_a
	–	–	+	+++[1]	+	++	–	++[1]	+++	++[1]	–	–	–	F_a
	–	–	–	(+)	–	–	–	–	++	–	–	–	–	M
	(+)	(+)	(+)	(+)	+++	+++	++[1]	–	–	(+)[1]	–	–	+++	
	(+)	(+)	(+)	(+)	+	+	–	–	–	–	–	–	+	
	✓	✓	✓	✓	✓	✓	✓	✓	✓	✓	✓	✓	✓	
	–	–	–	–	✓	✓	–	–	–	–	–	–	–	
	✓[1]	✓[1]	✓[1]	✓[1]	–	–	✓[1]	✓[1]	–	✓	✓	✓	✓	
	–	–	✓[1]	✓[1]	–	✓[1]	✓[1]	✓[1]	✓	–	–	–	–	
	✓	✓	✓	✓[1]	✓	✓	✓	✓	✓	✓	✓	✓	✓	
	–	–	–	–	–	–	–	–	–	–	–	–	–	
	–	–	✓[1]	✓[1]	–	✓[1]	✓[1]	–	–	–	–	–	–	
	++	++	++	+[1]	+	+	+++	+++[1]	(+)	+	(+)	++	+	n
	++	++	++	++	(+)	+[1]	++[1]	++[1]	++	+	++	–	+	
	+	(+)	(+)	(+)	(+)	+[1]	+	(+)	+	(+)	(+)	+	(+)	
	+++[1]	+++[1]	+++[1]	+++[1]	++	++	+++[1]	+++	+	++	++	+++	++	δ
	++	++	++	+	+	+	++[1]	++[1]	+	+	(+)	+++	++	
	+++	(+)	–	–	–	–	+++[1]	(+)	–	–	–	(+)	–	
	+++	+	–	(+)[1]	+	+	+++	–	–	–	–	–	–	
	–	+	++	+++	+	++	–	+[1]	+	+++	++	–	(+)	
	✓[1]	✓[1]	✓[1]	✓[1]	–	✓[1]	✓[1]	✓	–	–	–	–	✓	X-life
	15 710	15 500	15 400	15 673,1	20 260	20 1800	2 415	7 70	70 500	10 260	15 320	4 160	60 1600	
	412	***412***	***412***	***560***	***650***	***674***	***820***	***876***	***1106***	***1004***	***1038***	***1062***	***1080***	

Technical principles

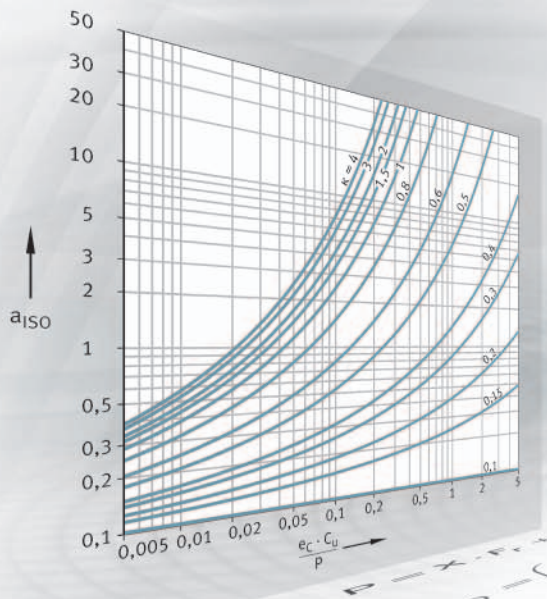



1 Load carrying capacity and life 34

1.1 Fatigue theory as a principle 34
1.2 Dimensioning of rolling bearings 34
1.3 Dynamic load carrying capacity and life 34
1.4 Calculation of the rating life 35
1.5 Basic rating life 35
1.6 Equivalent dynamic bearing load 36
1.7 Expanded adjusted rating life 37
1.8 Requisite minimum load 44
1.9 Equivalent operating values 45
1.10 Guide values for dimensioning 47
1.11 Static load carrying capacity 52
1.12 Equivalent static bearing load 53
1.13 Operating life 53

2 Rigidity 54

2.1 Calculation of the radial or axial displacement 54

3 Friction and increases in temperature 56

3.1 Heat dissipation 56
3.2 Determining the friction values 56
3.3 Load P_1 for ball bearings, tapered roller bearings, spherical roller bearings 61
3.4 Frictional torque for axially loaded radial cylindrical roller bearings 62

4 Speeds 64

4.1 Limiting speed 64
4.2 Thermal speed rating 64
4.3 Thermally safe operating speed 65

5 Noise 69

5.1 Schaeffler Noise Index 69

6 Lubrication 70

6.1 Basic principles 70
6.2 Grease lubrication 71
6.3 Oil lubrication 81
6.4 Lubricating grease groups 90
6.5 Arcanol rolling bearing greases 92

7 Bearing data 97

7.1 Main dimensions 97
7.2 Designation system 99
7.3 Determining the bearing bore 103
7.4 Radial internal clearance 103
7.5 Operating clearance 104
7.6 Axial internal clearance 106
7.7 Bearing materials 108
7.8 Cages 111
7.9 Operating temperature 113
7.10 Dimensional and running tolerances 115
7.11 Chamfer dimensions 137

8 Design of bearing arrangements 141

8.1 Arrangement of bearings 141
8.2 Radial location of bearings 146
8.3 Recommended fits 148
8.4 Tables of fits 151
8.5 Enveloping circle 169
8.6 Dimensional, geometrical and running accuracy of mating parts 170
8.7 Axial location of bearings 175
8.8 Raceways with direct bearing arrangement 182

9 Sealing of the bearing position 185

9.1 Non-contact seals 185
9.2 Contact seals 189

10 Mounting and dismounting 194

10.1 Handling 194
10.2 Guidelines for mounting 196
10.3 Accessories for mounting 197
10.4 Regulating the clearance during mounting 201
10.5 Accessories for dismounting 201
10.6 Special methods for mounting and dismounting 205
10.7 Tools and methods for the mounting and dismounting of rolling bearings 209

1 Load carrying capacity and life

"Expanded calculation of the adjusted rating life"

Schaeffler introduced the "Expanded calculation of the adjusted rating life" in 1997. This method was standardised for the first time in DIN ISO 281 Appendix 1 and has been a constituent part of the international standard ISO 281 since 2007. As part of the international standardisation work, the life adjustment factor a_{DIN} was renamed as a_{ISO} but without any change to the calculation method.

1.1 Fatigue theory as a principle

The basis of the rating life calculation in accordance with ISO 281 is Lundberg and Palmgren's fatigue theory which always gives a final rating life.

However, modern, high quality bearings can exceed by a considerable margin the values calculated for the basic rating life under favourable operating conditions. Ioannides and Harris have developed a further model for fatigue in rolling contact that expands on the Lundberg and Palmgren theory and gives a better description of the performance capability of modern bearings.

Values which must be taken into account in the "Expanded calculation of the adjusted rating life"

The method "Expanded calculation of the adjusted rating life" takes account of the following influences:

- the bearing load
- the fatigue limit of the material
- the extent to which the surfaces are separated by the lubricant
- the cleanliness in the lubrication gap
- additives in the lubricant
- the internal load distribution and frictional conditions in the bearing

The influencing factors, especially those relating to contamination, are extremely complex. A great deal of experience is essential for an accurate assessment. As a result, please consult Schaeffler for further advice.

The tables and diagrams in this chapter can only give guide values.

1.2 Dimensioning of rolling bearings

The required size of a rolling bearing is dependent on the demands made on its:

- rating life
- load carrying capacity
- operational reliability

1.3 Dynamic load carrying capacity and life

Basic dynamic load ratings

The dynamic load carrying capacity is described in terms of the basic dynamic load ratings. The basic dynamic load ratings are based on DIN ISO 281.

The basic dynamic load ratings for rolling bearings are matched to empirically proven performance standards published in previous FAG and INA catalogues.

The fatigue behaviour of the material determines the dynamic load carrying capacity of the rolling bearing.



Dynamic load carrying capacity

The dynamic load carrying capacity is described in terms of the basic dynamic load rating and the basic rating life.

Factors influencing the fatigue life

The fatigue life is dependent on:

- the load
- the operating speed
- the statistical probability of the first appearance of failure

Basic dynamic load rating C

The basic dynamic load rating C applies to rotating rolling bearings. It is:

- a constant radial load C_r for radial bearings
- a constant, concentrically acting axial load C_a for axial bearings

The basic dynamic load rating C is that load of constant magnitude and direction which a sufficiently large number of apparently identical bearings can endure for a basic rating life of one million revolutions.

1.4 Calculation of the rating life

Calculation methods

The methods for calculating the rating life are:

- basic rating life L_{10} and L_{10h} to ISO 281 ➤35| 1 and ➤35| 2
- expanded adjusted rating life L_{nm} to ISO 281 ➤37

1.5 Basic rating life

L_{10} or L_{10h}

The basic rating life in millions of revolutions (L_{10}) is determined in accordance with ➤35| 1, the basic rating life in operating hours (L_{10h}) is determined in accordance with ➤35| 2.

1
Rating life in revolutions

$$L_{10} = \left(\frac{C}{P}\right)^p$$

2
Rating life in operating hours

$$L_{10h} = \frac{16\,666}{n} \cdot \left(\frac{C}{P}\right)^p$$

Legend

L_{10}	10^6	The basic rating life in millions of revolutions, that is reached or exceeded by 90% of a sufficiently large number of apparently identical bearings before the first indications of material fatigue appear
L_{10h}	h	The basic rating life in operating hours, that is reached or exceeded by 90% of a sufficiently large number of apparently identical bearings before the first indications of material fatigue appear
C	N	Basic dynamic load rating, see product tables
P	N	Equivalent dynamic bearing load
p	–	Life exponent; for roller bearings: $p = 10/3$ for ball bearings: $p = 3$
n	min^{-1}	Operating speed.

1.6 Equivalent dynamic bearing load

The basic rating life L_{10} in accordance with ➤35| 1 is defined for a load of constant magnitude acting in a constant direction. In the case of radial bearings, this is a purely radial load, while in the case of axial bearings it is a purely axial load.

Equivalent dynamic load P is identical to the combined load occurring in practice

If the load and speed are not constant, equivalent operating values can be determined that induce the same fatigue as the actual loading conditions.

Equivalent operating values for variable load and speed ➤45| 1.9.

Equivalent dynamic radial bearing load

The equivalent dynamic load P on a bearing subjected to combined load (with a radial and axial load) is calculated in accordance with ➤36| 3.

3
Equivalent dynamic radial bearing load

$$P = X \cdot F_r + Y \cdot F_a$$

Legend

P	N	Equivalent dynamic radial bearing load
X	–	Radial load factor; see product tables
F_r	N	Radial load
Y	–	Axial load factor; see product tables
F_a	N	Axial load.

The calculation in accordance with ➤36| 3 cannot be applied to radial needle roller bearings, axial needle roller bearings and axial cylindrical roller bearings. Combined loads are not permissible with these bearings.

For radial needle roller bearings ➤36| 4, for axial bearings ➤36| 5.

4
Equivalent dynamic radial bearing load

$$P = F_r$$

Legend

P	N	Equivalent dynamic radial bearing load
F_r	N	Radial load.

Equivalent dynamic axial bearing load

In axial bearings with $\alpha = 90°$, only axial loads are possible

Axial deep groove ball bearings, axial cylindrical roller bearings, axial needle roller bearings and axial tapered roller bearings with the nominal contact angle $\alpha = 90°$ can only support purely axial forces.

For concentric axial load ➤36| 5.

5
Equivalent dynamic axial bearing load

$$P_a = F_a$$

Legend

P_a	N	Equivalent dynamic axial bearing load
F_a	N	Axial load.

In axial bearings with $\alpha \neq 90°$, axial and radial loads are possible

Axial angular contact ball bearings, axial spherical roller bearings and axial tapered roller bearings with the nominal contact angle $\alpha \neq 90°$ can support not only an axial force F_a but also a radial force F_r. The equivalent dynamic axial load P_a is thus determined in accordance with ➤36| 6.

6
Equivalent dynamic axial bearing load

$$P_a = X \cdot F_r + Y \cdot F_a$$

Legend

P_a	N	Equivalent dynamic axial bearing load
X	–	Radial load factor; see product tables
F_r	N	Radial load
Y	–	Axial load factor; see product tables
F_a	N	Axial load.

1.7 Expanded adjusted rating life

The calculation of the expanded adjusted rating life L_{nm} was standardised for the first time in DIN ISO 281 Appendix 1 and included in the global standard ISO 281 in 2007. It replaces the previously used adjusted rating life L_{na}. Computer-aided calculation to DIN ISO 281 Appendix 4 has been specified since 2008 in ISO/TS 16281 and standardised in DIN 26281 since 2010.

The expanded adjusted rating life L_{nm} is calculated in accordance with ➤37| f 7.

f 7 *Expanded adjusted rating life*

$$L_{nm} = a_1 \cdot a_{ISO} \left(\kappa, e_C, \frac{C_u}{P} \right) \cdot \left(\frac{C}{P} \right)^p$$

Legend

L_{nm}	10^6	Expanded adjusted rating life in millions of revolutions in accordance with ISO 281:2007
a_1	–	Life adjustment factor for a requisite reliability other than 90% ➤37| 1
a_{ISO}	–	Life adjustment factor for operating conditions
κ	–	Viscosity ratio
e_C	–	Life adjustment factor for contamination
C_u	kN	Fatigue limit load; see product tables
C	kN	Basic dynamic load rating; see product tables
P	kN	Equivalent dynamic bearing load
p	–	Life exponent.

Fatigue limit load C_u

The fatigue limit load C_u in accordance with ISO 281 is defined as the load below which, under laboratory conditions, no fatigue occurs in the material. The fatigue limit load C_u serves as a calculation value for determining the life adjustment factor a_{ISO} and not as a design criterion. With poor lubrication or contamination of the lubricant in particular, it is also possible for the material to undergo fatigue at loads which are significantly below the fatigue limit load C_u.

Life adjustment factor a_1

The values for the life adjustment factor a_1 were redefined in ISO 281:2007 and differ from the previous data ➤37| 1.

1 *Life adjustment factor a_1*

Requisite reliability	Expanded adjusted rating life	Life adjustment factor
%	L_{nm}	a_1
90	L_{10m}	1
95	L_{5m}	0,64
96	L_{4m}	0,55
97	L_{3m}	0,47
98	L_{2m}	0,37
99	L_{1m}	0,25
99,2	$L_{0,8m}$	0,22
99,4	$L_{0,6m}$	0,19
99,6	$L_{0,4m}$	0,16
99,8	$L_{0,2m}$	0,12
99,9	$L_{0,1m}$	0,093
99,92	$L_{0,08m}$	0,087
99,94	$L_{0,06m}$	0,08
99,95	$L_{0,05m}$	0,077

Life adjustment factor a_{ISO}

Influences on the life adjustment factor

The standardised method for calculating the life adjustment factor a_{ISO} essentially takes account of:

- the load on the bearing
- the lubrication conditions (viscosity and type of lubricant, speed, bearing size, additives)
- the fatigue limit of the material
- the type of bearing
- the residual stress in the material
- the environmental conditions
- contamination of the lubricant

f 8
Life adjustment factor for operating conditions

$$a_{ISO} = f\left[\frac{e_C \cdot C_u}{P}, \kappa\right]$$

Legend

a_{ISO}	–	Life adjustment factor for operating conditions ➤*39*|*1* to ➤*40*|*4*
e_C	–	Life adjustment factor for contamination ➤*43*|*2*
C_u	N	Fatigue limit load; see product tables
P	N	Equivalent dynamic bearing load
κ	–	Viscosity ratio ➤*41* For $\kappa > 4$ calculation should be carried out using $\kappa = 4$. This calculation method cannot be used for $\kappa < 0{,}1$.

Taking account of EP additives in the lubricant

In accordance with ISO 281, EP additives in the lubricant can be taken into consideration in the following way:

- For a viscosity ratio $\kappa < 1$ and a contamination factor $e_C \geqq 0{,}2$, calculation can be carried out using the value $\kappa = 1$ for lubricants with EP additives that have proven effective.
  Under severe contamination (contamination factor $e_C < 0{,}2$), the effectiveness of the additives under these contamination conditions must be demonstrated. The effectiveness of the EP additives can be demonstrated in the actual application or on a rolling bearing test rig FE8 to DIN 51819-1.
- If the EP additives are proven effective and calculation is carried out using the value $\kappa = 1$, the life adjustment factor must be restricted to $a_{ISO} \leqq 3$. If the value a_{ISO} calculated for the actual value κ is greater than 3, this value can be used in calculation

For practical purposes, the life adjustment factor should be restricted to $a_{ISO} \leqq 50$. This limit value also applies if $e_C \cdot C_u/P > 5$. For a viscosity ratio $\kappa > 4$, the value $\kappa = 4$ should be used; if $\kappa < 0{,}1$, the calculation is not valid.

The life adjustment factor a_{ISO} can – depending on the bearing type – be determined from ➤*39*\|*1* to ➤*40*\|*4*.

1

Life adjustment factor a_{ISO} for radial roller bearings

a_{ISO} = *life adjustment factor*
C_u = *fatigue limit load*
e_C = *contamination factor*
P = *equivalent dynamic bearing load*
κ = *parameter for the lubrication regime (viscosity ratio)*

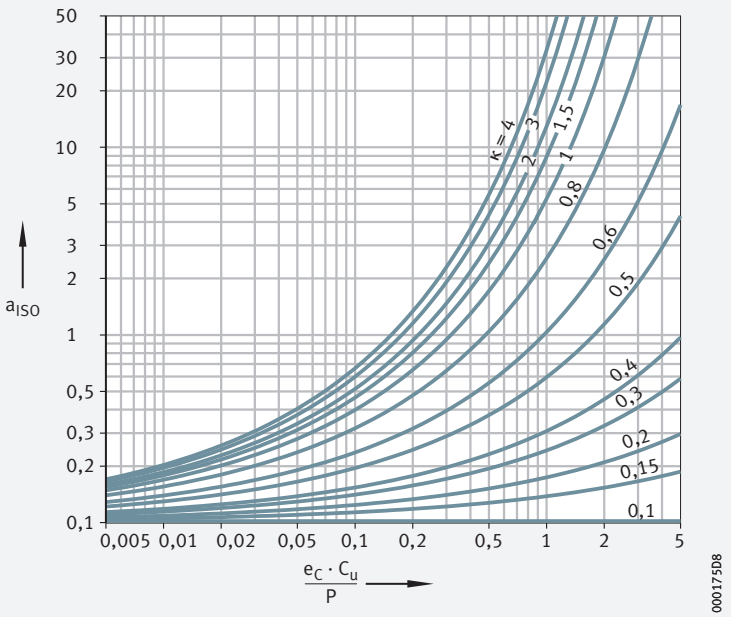

2

Life adjustment factor a_{ISO} for axial roller bearings

a_{ISO} = *life adjustment factor*
C_u = *fatigue limit load*
e_C = *contamination factor*
P = *equivalent dynamic bearing load*
κ = *parameter for the lubrication regime (viscosity ratio)*

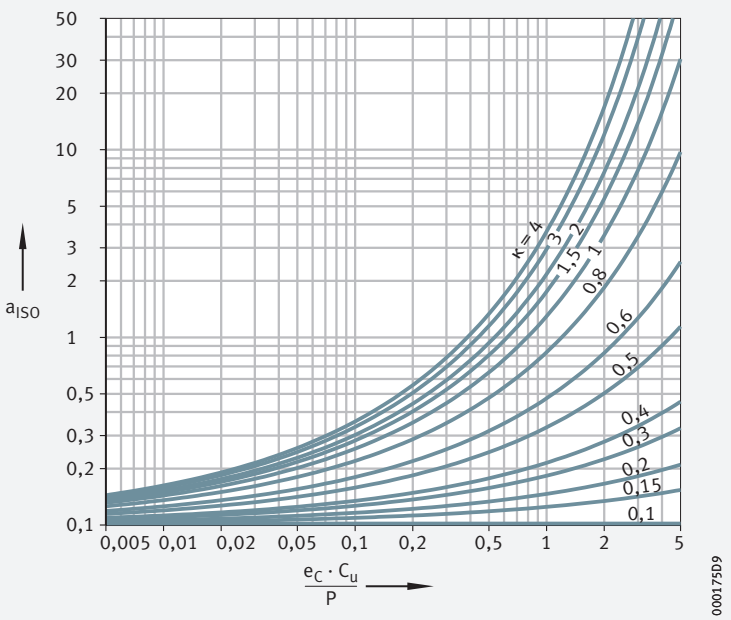

3
Life adjustment factor a_{ISO} for radial ball bearings

a_{ISO} = *life adjustment factor*
C_u = *fatigue limit load*
e_C = *contamination factor*
P = *equivalent dynamic bearing load*
κ = *parameter for the lubrication regime (viscosity ratio)*

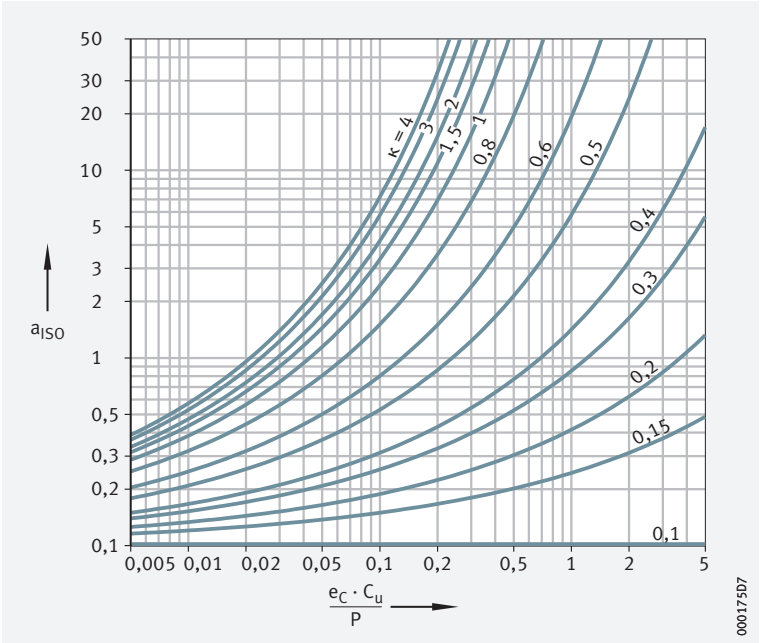

4
Life adjustment factor a_{ISO} for axial ball bearings

a_{ISO} = *life adjustment factor*
C_u = *fatigue limit load*
e_C = *contamination factor*
P = *equivalent dynamic bearing load*
κ = *parameter for the lubrication regime (viscosity ratio)*

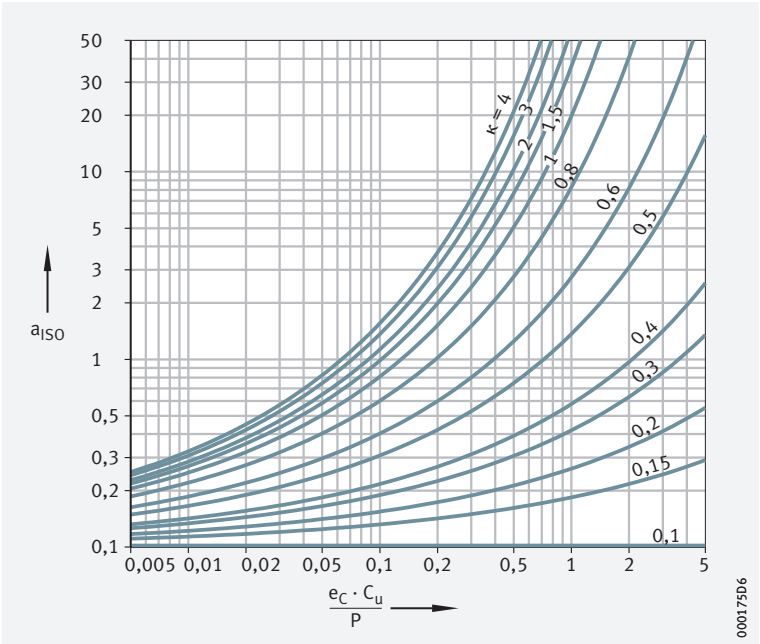

Viscosity ratio κ

The viscosity ratio κ is an indication of the quality of lubricant film formation ➤*41*|*f 9*.

f 9
Viscosity ratio

$$\kappa = \frac{\nu}{\nu_1}$$

Legend

κ	–	Viscosity ratio
ν	mm^2/s	Kinematic viscosity of the lubricant at operating temperature
ν_1	mm^2/s	Reference viscosity of the lubricant at operating temperature.

Reference viscosity

The reference viscosity ν_1 is determined from the mean bearing diameter $d_M = (D + d)/2$ and the operating speed n ➤*42*|*5*.

Nominal viscosity

The nominal viscosity of the oil at +40 °C is determined from the required operating viscosity ν and the operating temperature ϑ ➤*42*|*6*.
In the case of greases, ν is the operating viscosity of the base oil.

In the case of heavily loaded bearings with a high proportion of sliding contact, the temperature in the contact area of the rolling elements may be up to 20 K higher than the temperature measured on the stationary ring (without the influence of any external heat sources).

The inclusion of EP additives in calculation of the expanded adjusted rating life L_{nm} takes place in accordance with ISO 281 ➤*38*.

ν_1 for $n < 1000\ min^{-1}$ or $n \geqq 1000\ min^{-1}$

The reference viscosity ν_1 is calculated for $n < 1000\ min^{-1}$ in accordance with ➤*41*|*f 10*, for $n \geqq 1000\ min^{-1}$ in accordance with ➤*41*|*f 11*.
By differentiating between these cases, the effect of starvation at high speeds is taken into account.

f 10
Reference viscosity

$$\nu_1 = 45\,000 \cdot n^{-0,83} \cdot d_M{}^{-0,5}$$

f 11
Reference viscosity

$$\nu_1 = 4\,500 \cdot n^{-0,5} \cdot d_M{}^{-0,5}$$

Legend

ν_1	mm^2/s	Reference viscosity of the lubricant at operating temperature
n	min^{-1}	Operating speed
d_M	mm	Mean bearing diameter $d_M = (D + d)/2$.

ν_1 for synthetic oils

In accordance with ISO 281:2007, the equations ➤*41*|*f 10* and ➤*41*|*f 11* can also be used in approximate terms for synthetic oils, such as oils based on synthetic hydrocarbons (SHC) for example.

5
Reference viscosity ν_1

ν_1 = *reference viscosity*
d_M = *mean bearing diameter; (d + D)/2*
n = *operating speed*

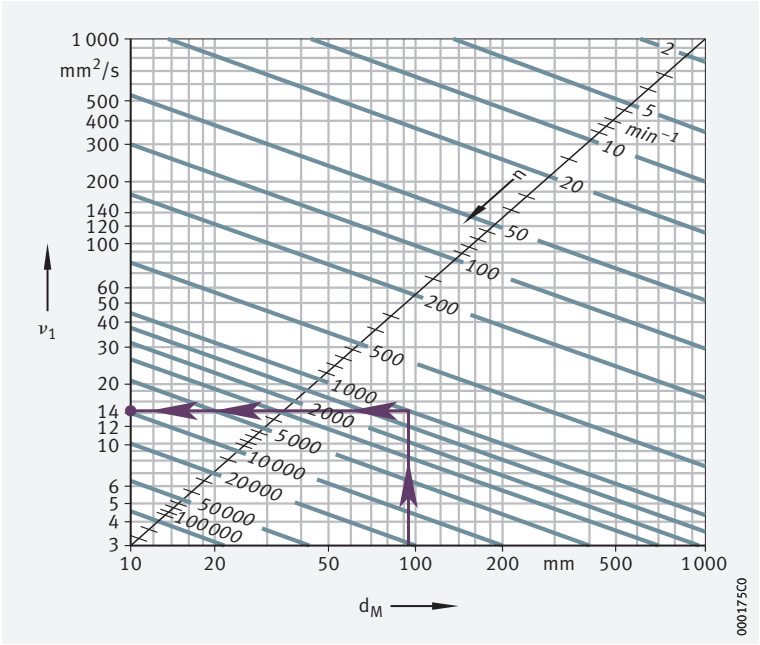

6
ν/ϑ diagram for mineral oils

ν = *operating viscosity*
ϑ = *operating temperature*
ν_{40} = *viscosity at +40 °C*

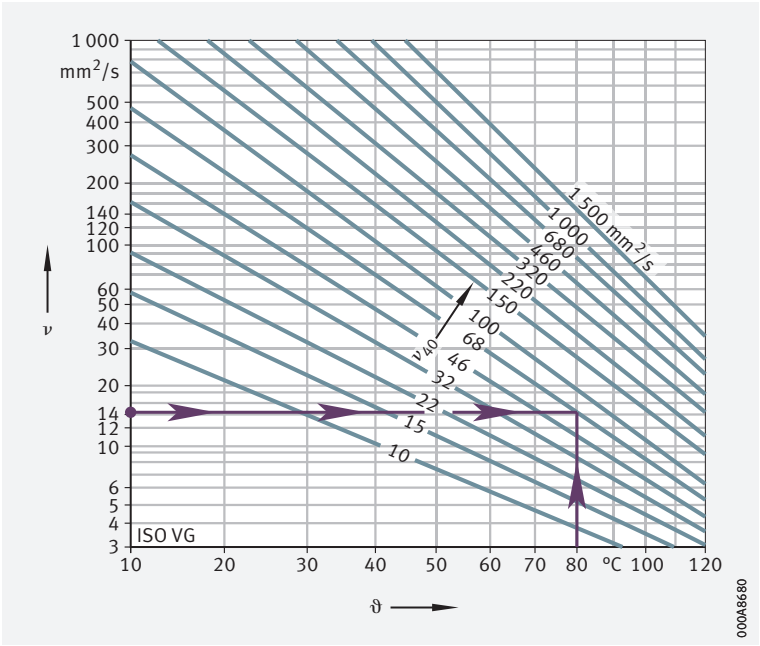

Life adjustment factor for contamination

✎ *Contamination factor e_C*

The life adjustment factor for contamination e_C takes account of the influence of contamination in the lubrication gap on the rating life ➤*43*|▦*2*.

The rating life is reduced by solid particles in the lubrication gap and is dependent on:

- the type, size, hardness and number of particles
- the relative lubrication film thickness
- the bearing size

Due to the complex interactions between these influencing factors, it is only possible to give approximate guide values. The values in the tables are valid for contamination by solid particles (factor e_C). No account is taken of other contamination such as that caused by water or other fluids. Under severe contamination ($e_C \rightarrow 0$) the bearings may fail due to wear. In this case, the operating life is substantially less than the calculated life.

➤*43*|▦*2* shows guide values for the contamination factor e_C. The values are given in DIN ISO 281. An aid to selecting the appropriate cleanliness class is given in DIN ISO 281 Appendix 3. This appendix also gives guidance on achieving the individual cleanliness classes.

▦ **2**
Guide values for the contamination factor e_C

d_M = *mean bearing diameter* $(d + D)/2$

Contamination	Contamination factor e_C			
	$d_M < 100$ mm		$d_M \geqq 100$ mm	
	from	to	from	to
Very high cleanliness: ■ Particle size within the order of magnitude of the lubricant film thickness ■ Laboratory conditions	1		1	
High cleanliness: ■ Oil filtered through extremely fine filter ■ Sealed, greased bearings	0,8	0,6	0,9	0,8
Standard cleanliness: ■ Oil filtered through fine filter	0,6	0,5	0,8	0,6
Slight contamination: ■ Slight contamination of oil	0,5	0,3	0,6	0,4
Typical contamination: ■ Bearing contaminated by wear debris from other machine elements	0,3	0,1	0,4	0,2
Heavy contamination: ■ Bearing environment is heavily contaminated ■ Bearing environment inadequately sealed	0,1	0	0,1	0
Very heavy contamination	0		0	

1.8 Requisite minimum load

In order to prevent damage due to slippage, a minimum radial or axial load must be applied to the bearings ➤44|▦3.

▦3
Recommended minimum radial and axial load for rolling bearings

Bearing type	Recommended minimum load
Deep groove ball bearings	$P > C_0/100$
Angular contact ball bearings	$P > C_0/100$
Self-aligning ball bearings	$P > C_0/100$
Cylindrical roller bearings	$P > C_0/60$
Tapered roller bearings	$P > C_0/60$
Barrel roller bearings	$P > C_0/60$
Spherical roller bearings	$P > C_0/100$
Needle roller bearings	$P > C_0/60$
Axial deep groove ball bearings	$F_{a\,min} = 1000 \cdot A \cdot \left(\frac{n_{max}}{1000}\right)^2$
Axial cylindrical roller bearings[1)]	$F_{a\,min} = 0{,}0005 \cdot C_{0a} + k_a \left(\frac{C_{0a} \cdot n}{10^8}\right)^2$
Axial needle roller bearings	$F_{a\,min} = 0{,}0005 \cdot C_{0a} + 3 \cdot \left(\frac{C_{0a} \cdot n}{10^8}\right)^2$
Axial spherical roller bearings[2)]	$F_{a\,min} = 0{,}0005 \cdot C_{0a} + k_a \left(\frac{C_{0a} \cdot n}{10^8}\right)^2$

1) $\overline{\text{Factor } k_a}$ ➤44|▦4
2) Factor k_a ➤44|▦5

▦4
Factor k_a for axial cylindrical roller bearings

Series	Factor k_a
K811	1,4
K812	0,9
K893	0,7
K894	0,5

▦5
Factor k_a for axial spherical roller bearings

Series	Factor k_a
292..-E	0,6
293..-E1(E)	0,9
294..-E1(E)	0,7

1.9 Equivalent operating values

Equivalent operating values for non-constant loads and speeds

The rating life equations assume a constant bearing load P and constant bearing speed n. If the load and speed are not constant, equivalent operating values can be determined that induce the same fatigue as the actual loading conditions.

The operating values calculated here already take account of the life adjustment factors a_{ISO}. They must not be applied again when calculating the adjusted rating life.

Variable load and speed

If the load and speed vary over a time period T, the speed n and the equivalent bearing load P ➤*45*| *f 12* and ➤*45*| *f 13* are calculated as follows. If only a basic rating life is to be calculated, the terms $1/a_{ISO}$ can be omitted from the equations ➤*45*| *f 12* to ➤*46*| *f 19*.

f 12 *Equivalent speed*

$$n = \frac{1}{T}\int_0^T n(t) \cdot dt$$

f 13 *Equivalent bearing load*

$$P = \sqrt[p]{\frac{\int_0^T \frac{1}{a_{ISO}(t)} \cdot n(t) \cdot F^p(t) \cdot dt}{\int_0^T n(t) \cdot dt}}$$

Variation in steps

If the load and speed vary in steps over a time period T, n and P are calculated as follows ➤*45*| *f 14* and ➤*45*| *f 15*.

f 14 *Equivalent speed*

$$n = \frac{q_1 \cdot n_1 + q_2 \cdot n_2 + \ldots + q_z \cdot n_z}{100}$$

f 15 *Equivalent bearing load*

$$P = \sqrt[p]{\frac{\frac{1}{a_{ISO\,i}} \cdot q_i \cdot n_i \cdot F_i^p + \ldots + \frac{1}{a_{ISO\,z}} \cdot q_z \cdot n_z \cdot F_z^p}{q_i \cdot n_i + \ldots + q_z \cdot n_z}}$$

Variable load at constant speed

If the function F describes the variation in the load over a time period T and the speed is constant, P is calculated as follows ➤*45*| *f 16*.

f 16 *Equivalent bearing load*

$$P = \sqrt[p]{\frac{1}{T}\int_0^T \frac{1}{a_{ISO}(t)} \cdot F^p(t) \cdot dt}$$

Load varying in steps at constant speed

If the load varies in steps over a time period T and the speed is constant, P is calculated as follows ➤*45*| *f 17*.

f 17 *Equivalent bearing load*

$$P = \sqrt[p]{\frac{\frac{1}{a_{ISO\,i}} \cdot q_i \cdot F_i^p + \ldots + \frac{1}{a_{ISO\,z}} \cdot q_z \cdot F_z^p}{100}}$$

Constant load at variable speed

If the speed varies but the load remains constant, the following applies ➤46| 18.

18
Equivalent speed

$$n = \frac{1}{T}\int_0^T \frac{1}{a_{ISO}(t)} \cdot n(t) \cdot dt$$

Constant load with speed varying in steps

If the speed varies in steps, the following applies ➤46| 19.

19
Equivalent speed

$$n = \frac{\frac{1}{a_{ISO\,i}} \cdot q_i \cdot n_i + \ldots + \frac{1}{a_{ISO\,z}} \cdot q_z \cdot n_z}{100}$$

Swivel motion

The equivalent speed is calculated in accordance with ➤46| 20.
If the swivel angle is smaller than twice the pitch angle of the rolling elements, there is a risk of false brinelling.

20
Equivalent speed

$$n = n_{osc} \cdot \frac{\varphi}{180°}$$

Legend

n	min^{-1}	Equivalent speed
T	min	Time period under consideration
P	N	Equivalent bearing load
p	–	Life exponent; for roller bearings: $p = 10/3$ for ball bearings: $p = 3$
$a_{ISO\,i}$, $a_{ISO}(t)$	–	Life adjustment factor a_{ISO} for current operating condition
n_i, $n(t)$	min^{-1}	Bearing speed for current operating condition
q_i	%	Duration of operating condition as a proportion of the total operating period; $q_i = (\Delta t_i/T) \cdot 100$
F_i, $F(t)$	N	Bearing load during the current operating condition
n_{osc}	min^{-1}	Frequency of swivel motion
φ	°	Swivel angle ➤46| 7.

7
Swivel motion, swivel angle

Complete swivel motion $= 2 \cdot \varphi_s$
φ_s = *swivel angle of the bearing*
φ_a = *swivel angle at which every point on the outer raceway is overrolled*

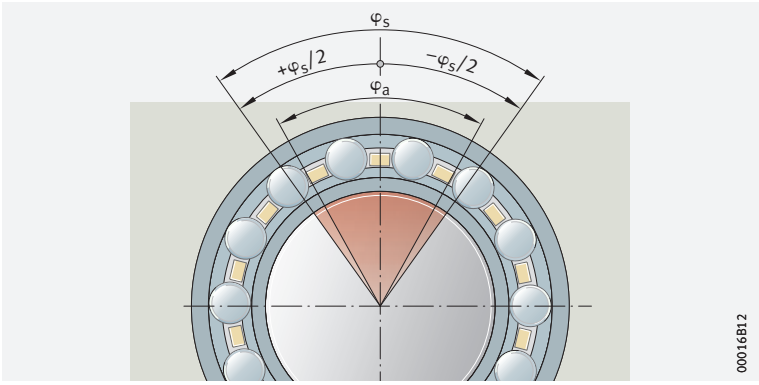

1.10 Guide values for dimensioning

✎ *Guide values for rating life*

The values for the recommended rating life are guide values for normal operating conditions ➤*47*|▦*6* to ➤*51*|▦*22*. In addition, the tables give the operating life values that are usually achieved in practice at various mounting locations.

Do not overspecify the bearings, otherwise it may not be possible to observe the requisite minimum load. Recommended minimum load ➤*44*|*1.8* and product chapter.

▦*6* *Motor vehicles*

Mounting location	Recommended rating life h			
	Ball bearings		Roller bearings	
	from	to	from	to
Motorcycles	400	2 000	400	2 400
Passenger car powertrains	500	1 100	500	1 200
Passenger car gearboxes protected against contamination	200	500	200	500
Passenger car wheel bearings	1 400	5 300	1 500	7 000
Light commercial vehicles	2 000	4 000	2 400	5 000
Medium commercial vehicles	2 900	5 300	3 600	7 000
Heavy commercial vehicles	4 000	8 800	5 000	12 000
Buses	2 900	11 000	3 600	16 000
Internal combustion engines	900	4 000	900	5 000

▦*7* *Rail vehicles*

Mounting location	Operating life Millions of kilometres	
	from	to
Wheelset bearings for freight wagons	0,1	0,1
Urban transport vehicles	1	2
Passenger carriages	2	3
Goods wagons	1	2
Tipper wagons	1	2
Powered units	2	3
Locomotives, external bearings	2	4
Locomotives, internal bearings	2	4
Shunting and industrial locomotives	0,5	1
Gearboxes for rail vehicles	0,5	2

▦*8* *Shipbuilding*

Mounting location	Recommended rating life h				Operating life h	
	Ball bearings		Roller bearings			
	from	to	from	to	from	to
Marine thrust bearings	–	–	20 000	50 000	30 000	80 000
Marine shaft bearings	–	–	50 000	200 000	30 000	80 000
Large marine gearboxes	14 000	46 000	20 000	75 000	30 000	80 000
Small marine gearboxes	4 000	14 000	5 000	20 000	5 000	20 000
Boat propulsion systems	1 700	7 800	2 000	10 000	2 000	10 000

9 *Agricultural machinery*

Mounting location	Recommended rating life h				Operating life h	
	Ball bearings		Roller bearings			
	from	to	from	to	from	to
Tractors	1 700	4 000	2 000	5 000	5 000	10 000
Self-propelled machinery	1 700	4 000	2 000	5 000	2 000	6 000
Seasonal machinery	500	1 700	500	2 000	500	2 000

10 *Construction machinery*

Mounting location	Recommended rating life h				Operating life h	
	Ball bearings		Roller bearings			
	from	to	from	to	from	to
Dozers, loaders	4 000	7 800	5 000	10 000	5 000	10 000
Excavators, travelling gear	500	1 700	500	2 000	500	2 000
Excavators, slewing gear	1 700	4 000	2 000	5 000	2 000	5 000
Vibratory road rollers, unbalance generators	1 700	4 000	2 000	5 000	5 000	30 000
Vibrator bodies	500	1 700	500	2 000	500	2 000

11 *Electric motors*

Mounting location	Recommended rating life h				Operating life h	
	Ball bearings		Roller bearings			
	from	to	from	to	from	to
Electric motors for household appliances	1 700	4 000	–	–	500	1 000
Series motors	21 000	32 000	35 000	50 000	20 000	30 000
Large motors	32 000	63 000	50 000	110 000	40 000	50 000
Wind energy generators	–	–	–	–	100 000	200 000
Generators	–	–	–	–	40 000	50 000

continued ▼

11 *Electric motors*

Mounting location	Recommended rating life h				Operating life km	
	Ball bearings		Roller bearings			
	from	to	from	to	from	to
Electric traction motors for	14 000	21 000	20 000	35 000	–	
mainline operation	–	–	–	–	2 000 000	2 500 000
trams	–	–	–	–	1 000 000	1 000 000
suburban and underground trains	–	–	–	–	1 500 000	1 500 000

continued ▲

12 *Rolling mills, steelworks equipment*

Mounting location	Recommended rating life h				Operating life h	
	Ball bearings		Roller bearings			
	from	to	from	to	from	to
Rolling mill frames	500	14 000	500	20 000	2 000	10 000
Rolling mill gearboxes	14 000	32 000	20 000	50 000	20 000	40 000
Roller tables	7 800	21 000	10 000	35 000	20 000	40 000
Centrifugal casting machines	21 000	46 000	35 000	75 000	30 000	60 000

13 *Machine tools*

Mounting location	Recommended rating life h				Operating life h	
	Ball bearings		Roller bearings			
	from	to	from	to	from	to
Headstock spindles, milling spindles	14 000	46 000	20 000	75 000	10 000	30 000
Drilling spindles	14 000	32 000	20 000	50 000	1 000	20 000
External grinding spindles	7 800	21 000	10 000	35 000	10 000	20 000
Hole grinding spindles	–				500	2 000
Workpiece spindles in grinding machines	21 000	63 000	35 000	110 000	20 000	30 000
Machine tool gearboxes	14 000	32 000	20 000	50 000	10 000	20 000
Presses, flywheels	21 000	32 000	35 000	50 000	20 000	30 000
Presses, eccentric shafts	14 000	21 000	20 000	35 000	10 000	20 000
Electric tools and compressed air tools	4 000	14 000	5 000	20 000	100	200

14 *Woodworking machinery*

Mounting location	Recommended rating life h				Operating life h	
	Ball bearings		Roller bearings			
	from	to	from	to	from	to
Milling spindles and cutter blocks	14 000	32 000	20 000	50 000	10 000	20 000
Saw frames, main bearings	–	–	35 000	50 000	–	
Saw frames, connecting rod bearings	–	–	10 000	20 000	–	
Circular saws	4 000	14 000	5 000	20 000	10 000	20 000

15 *Gearboxes in general machine building*

Mounting location	Recommended rating life h				Operating life h	
	Ball bearings		Roller bearings			
	from	to	from	to	from	to
Universal gearboxes	4 000	14 000	5 000	20 000	5 000	20 000
Geared motors	4 000	14 000	5 000	20 000	5 000	20 000
Large gearboxes, stationary	14 000	46 000	20 000	75 000	20 000	80 000

16 *Conveying equipment*

Mounting location	Recommended rating life h				Operating life h	
	Ball bearings		Roller bearings			
	from	to	from	to	from	to
Belt drives, mining	–	–	75 000	150 000	10 000	30 000
Conveyor belt rollers, mining	46 000	63 000	75 000	110 000	10 000	30 000
Conveyor belt rollers, general	7 800	21 000	10 000	35 000	10 000	30 000
Belt drums	–	–	50 000	75 000	10 000	30 000
Bucket wheel excavators, travel drive	7 800	21 000	10 000	35 000	5 000	15 000
Bucket wheel excavators, bucket wheel	–	–	75 000	200 000	30 000	50 000
Bucket wheel excavators, bucket wheel drive	46 000	83 000	75 000	150 000	30 000	50 000
Winding cable sheaves	32 000	46 000	50 000	75 000	50 000	80 000
Sheaves	7 800	21 000	10 000	35 000	8 000	30 000
Tunnel-boring machines: drill head main bearings	–	–	–	–	5 000	10 000

17 *Pumps, fans, compressors*

Mounting location	Recommended rating life h				Operating life h	
	Ball bearings		Roller bearings			
	from	to	from	to	from	to
Ventilators, fans	21 000	46 000	35 000	75 000	20 000	100 000
Large fans	32 000	63 000	50 000	110 000	10 000	–
Piston pumps	21 000	46 000	35 000	75 000	20 000	50 000
Centrifugal pumps	14 000	46 000	20 000	75 000	20 000	50 000
Hydraulic axial and radial piston engines	500	7 800	500	10 000	1 000	20 000
Gear pumps	500	7 800	500	10 000	1 000	20 000
Compressors	4 000	21 000	5 000	35 000	30 000	80 000

18 *Centrifuges, stirrers*

Mounting location	Recommended rating life h				Operating life h	
	Ball bearings		Roller bearings			
	from	to	from	to	from	to
Centrifuges	7 800	14 000	10 000	20 000	40 000	60 000
Large stirrers	21 000	32 000	35 000	50 000	40 000	50 000

19 *Textile machinery*

Mounting location	Recommended rating life h				Operating life h	
	Ball bearings		Roller bearings			
	from	to	from	to	from	to
Spinning machines, spinning spindles	21 000	46 000	35 000	75 000	10 000	50 000
Weaving and knitting machines	14 000	32 000	20 000	50 000		



20 *Plastics processing*

Mounting location	Recommended rating life h				Operating life h	
	Ball bearings		Roller bearings			
	from	to	from	to	from	to
Plastics worm extruders	14 000	21 000	20 000	35 000	20 000	100 000
Rubber and plastics calenders	21 000	46 000	35 000	75 000		

21 *Crushers, mills, screens*

Mounting location	Recommended rating life h				Operating life h	
	Ball bearings		Roller bearings			
	from	to	from	to	from	to
Jaw crushers	–	–	20 000	35 000	25 000	40 000
Gyratory crushers, roll crushers	–	–	20 000	35 000		
Rigid hammer mills, hammer mills, impact crushers	–	–	50 000	110 000	40 000	40 000
Tube mills	–	–	50 000	100 000	100 000	100 000
Vibration grinding mills	–	–	5 000	20 000	30 000	60 000
Grinding track mills	–	–	50 000	110 000	60 000	100 000
Vibrating screens	–	–	10 000	20 000	10 000	30 000
Briquette presses	–	–	35 000	50 000	40 000	40 000
Rotary kiln radial support rollers	–	–	50 000	110 000	100 000	–
Roller presses	–	–	–	–	40 000	40 000

22 *Paper and printing machinery*

Mounting location	Recommended rating life h				Operating life h	
	Ball bearings		Roller bearings			
	from	to	from	to	from	to
Paper machinery, wet section	–	–	110 000	150 000	50 000	100 000
Paper machinery, dry section	–	–	150 000	250 000	–	
Guide rolls					50 000	120 000
Dryer rolls					50 000	150 000
M.G. cylinders					50 000	200 000
Paper machinery, refiners	–	–	80 000	120 000	50 000	100 000
Paper machinery, calenders	–	–	80 000	110 000	50 000	100 000
Printing machinery	32 000	46 000	50 000	75 000	30 000	60 000

1.11 Static load carrying capacity

Plastic deformation limits the static load carrying capacity

If high, static or shock loads occur, the raceways and rolling elements may undergo plastic deformation. This deformation limits the static load carrying capacity of the rolling bearing with respect to the permissible noise level during operation of the bearing.

Basic static load rating

If a rolling bearing operates with only infrequent rotary motion or completely without rotary motion, its size is determined in accordance with the basic static load rating C_0.

In accordance with DIN ISO 76, this is:

- a constant radial load C_{0r} for radial bearings
- a constant, concentrically acting axial load C_{0a} for axial bearings

The basic static load rating C_0 is that load under which the Hertzian pressure at the most heavily loaded point between the rolling elements and raceways reaches the following values:

- for roller bearings, 4 000 N/mm^2
- for ball bearings, 4 200 N/mm^2
- for self-aligning ball bearings, 4 600 N/mm^2

Under normal contact conditions, this load causes a permanent deformation at the contact points of approx. 1/10 000 of the rolling element diameter.

Static load safety factor

In addition to dimensioning on the basis of the fatigue life, it is advisable to check the static load safety factor. Guide values and shock loads occurring during operation must be taken into consideration ➤52|▦23.

21
Static load safety factor

$$S_0 = \frac{C_0}{P_0}$$

Legend

S_0	–	Static load safety factor; guide values ➤52|▦23
C_{0r}, C_{0a}	N	Basic radial or axial static load rating; see product tables
P_{0r}, P_{0a}	N	Radial or axial equivalent static bearing load ➤53|22.

Guide values for static load safety factor

Guide values for the requisite static load safety factor S_0 are given in DIN ISO 76:2009-01 and in ➤52|▦23. Guide values for axial spherical roller bearings and high precision bearings: see corresponding product description. For drawn cup needle roller bearings, $S_0 \geqq 3$ is necessary.

23
Static load safety factor S_0 for ball and roller bearings – guide values

Operating conditions and application	Static load safety factor S_0 min.	
	Ball bearings	Roller bearings
Low-noise, smooth running, free from vibrations, high rotational accuracy	2	3
Normal, smooth running, free from vibrations, normal rotational accuracy	1	1,5
Pronounced shock loading[1)]	1,5	3

1) If the order of magnitude of the shock loading is not known, the values used for S_0 should be at least 1,5. If the order of magnitude of the shock loading is known precisely, lower values are possible.

1.12 Equivalent static bearing load

The equivalent static load P_0 is a calculated value. It corresponds to a radial load in radial bearings and a concentric axial load in axial bearings.

P_0 induces the same load at the centre point of the most heavily loaded contact point between the rolling element and raceway as the combined load occurring in practice.

f **22**
Equivalent static bearing load

$$P_0 = X_0 \cdot F_r + Y_0 \cdot F_a$$

Legend

P_0	N	Equivalent static bearing load
X_0	N	Radial load factor; see product tables or product description
F_r, F_a	N	Largest radial or axial load present
Y_0	N	Axial load factor; see product tables or product description.

The calculation cannot be applied to radial needle roller bearings, axial needle roller bearings and axial cylindrical roller bearings. Combined loads are not permissible with these bearings.

In the case of radial needle roller bearings and all radial cylindrical roller bearings:
$P_0 = F_{0r}$
For axial needle roller bearings and axial cylindrical roller bearings:
$P_0 = F_{0a}$

1.13 Operating life

The operating life is defined as the life actually achieved by the bearing. It may differ significantly from the calculated life.

Possible factors influencing the operating life

This may be due to wear or fatigue as a result of:

- deviating operating data
- misalignments between the shaft and housing
- insufficient or excessive operating clearance
- contamination
- insufficient lubrication
- excessive operating temperature
- oscillating bearing movement with very small swivel angles (false brinelling)
- high vibration and false brinelling
- very high shock loads (static overloading)
- prior damage during mounting

The operating life cannot be calculated

Due to the wide variety of possible installation and operating conditions, it is not possible to precisely predetermine the operating life. The most reliable way of arriving at a close estimate is by comparison with similar applications.

2 Rigidity

✎ *Roller bearings are more rigid than ball bearings*

The rigidity of a rolling bearing is dependent on the bearing type, size and operating clearance. The rigidity increases with the number of rolling elements supporting the load. Due to the line contact between the rolling elements and raceways, it is higher in roller bearings than in ball bearings. ➤ *54* | *1* shows typical characteristic curves for the radial deflection of various bearings with the same bore diameter.

1
Radial deflection of various radial bearings of bore diameter d = 50 mm

δ_r = *radial deflection*
F_r = *radial load*

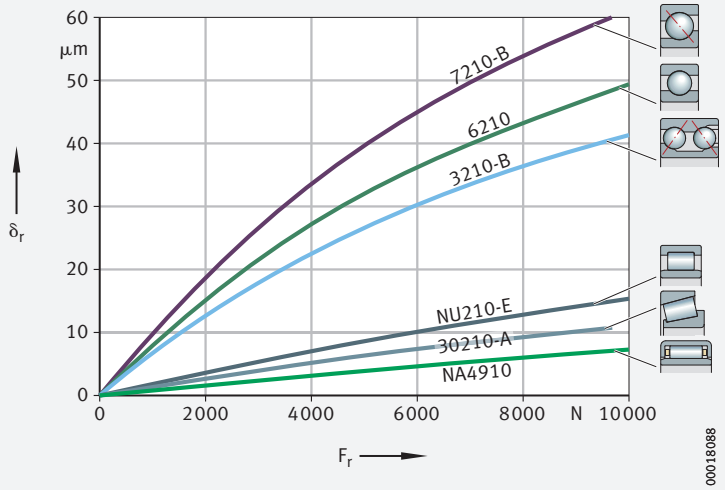

2.1 Calculation of the radial or axial displacement

✎ *Progressive deflection rate*

Rolling bearings have a progressive deflection rate. The displacement values for needle and cylindrical roller bearings can be determined using approximation equations ➤ *54* | *f 1* and ➤ *54* | *f 2*.

The equations are valid for bearings without misalignment and with a rigid surrounding structure. In axial bearings, a concentrically acting load is assumed.

f 1
Radial displacement

$$\delta_r = \frac{1}{c_s} \cdot F_r^{0,84} + \frac{s}{2}$$

f 2
Axial displacement

$$\delta_a = \frac{1}{c_s} \cdot \left[\left(F_{aV} + F_a \right)^{0,84} - F_{aV}^{0,84} \right]$$

f 3
Rigidity parameter

$$c_s = K_c \cdot d^{0,65}$$

Legend

c_s	$N^{0,84}/\mu m$	Rigidity parameter
d	mm	Bearing bore diameter
δ_r	µm	Radial displacement between shaft axis and centre of bore ➤ *55*	*2*
δ_a	µm	Axial displacement between shaft locating washer and housing locating washer ➤ *55*	*3*
s	µm	Radial operating clearance of fitted, unloaded bearing
F_r	N	Radial load
F_a	N	Axial load
F_{aV}	N	Axial preload force
K_c	–	Factor for determining the rigidity parameter ➤ *55*	*1*.

2
Radial cylindrical roller bearings, radial displacement

δ_r = *radial displacement*
F_r = *radial load*

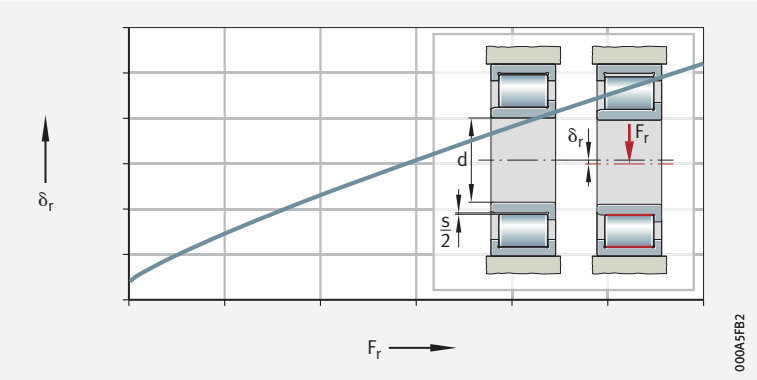

3
Axial cylindrical roller bearing, axial displacement

δ_a = *axial displacement*
F_a = *axial load*
F_{aV} = *axial preload force*

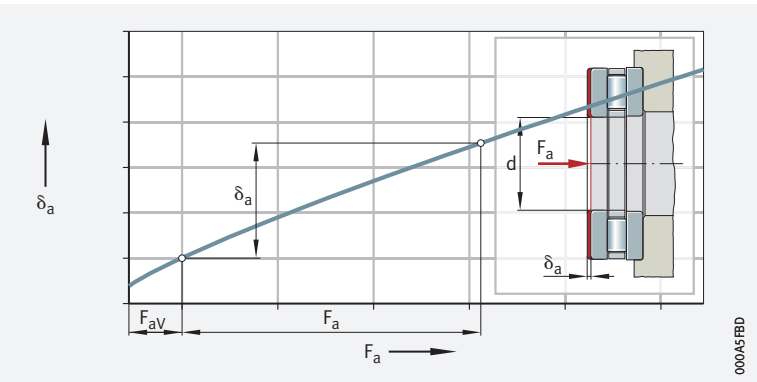

1
Factor K_c

Bearing series	Factor K_c	Series	Factor K_c
SL1818	12,8	K811, 811, K812, 812	36,7
SL1829, SL1830, SL1923	16	K893, 893, K894, 894	59,7
SL1850, SL0148, SL0248, SL0249	29,2	NJ2..-E	11,1
NA48	24,9	NJ3..-E	11,3
NA49	23,5	NJ22..-E	15,4
NA69	37,3	NJ23..-E	16,9
NKIS	21,3	NU10	9,5
NKI	$4,4 \cdot B^{0,8}/d^{0,2}$	NU19	11,3
HK, BK	$4,2 \cdot C^{0,8}/d^{0,2}$	NN30..-AS-K	18,6

This simplified calculation cannot be applied to other bearing types. The displacement and rigidity at the operating point can be determined using the calculation program BEARINX-online.

3 Friction and increases in temperature

Frictional components

The friction in a rolling bearing is made up of several components ➤56| *1*. Due to the large number of influencing factors, such as dynamics in speed and load, tilting and skewing resulting from installation, actual frictional torques and frictional power may deviate significantly from the calculated values.

If the frictional torque is an important design criterion, please consult Schaeffler.

The calculation module BEARINX-online Easy Friction, which is available from Schaeffler free of charge, can be used to calculate and analyse the frictional torque.

1 *Frictional component and influencing factor*

Frictional component	Influencing factor
Rolling friction	Magnitude of load
Sliding friction of rolling elements Sliding friction of cage	Magnitude and direction of load Speed and lubrication conditions, running-in condition
Fluid friction (flow resistance)	Type and speed Type, quantity and operating viscosity of lubricant
Seal friction	Type and preload of seal

Influencing factors on idling friction

The idling friction is dependent on the lubricant quantity, speed, operating viscosity of the lubricant, seals and the running-in condition of the bearing.

3.1 Heat dissipation

Friction is converted into heat. This must be dissipated from the bearing. The equilibrium between the frictional power and heat dissipation allows calculation of the thermally safe operating speed n_ϑ ➤65|4.3.

Lubricant

Lubricating oil dissipates a portion of the heat. Recirculating oil lubrication with additional cooling is particularly effective. Grease does not give dissipation of heat.

Shaft and housing

Heat dissipation via the shaft and housing is dependent on the temperature difference between the bearing and the surrounding structure. Any additional adjacent sources of heat or thermal radiation must be taken into consideration.

3.2 Determining the friction values

The speed and load must also be known. The type of lubrication, lubrication method and viscosity of the lubricant at operating temperature are further important factors in calculation.

f1 *Total frictional torque*

$$M_R = M_0 + M_1$$

f2 *Frictional power*

$$N_R = M_R \cdot \frac{n}{9550}$$



For $\nu \cdot n \geqq 2\,000$:

f 3 *Frictional torque as a function of speed*

$$M_0 = f_0 \cdot (\nu \cdot n)^{2/3} \cdot {d_M}^3 \cdot 10^{-7}$$

For $\nu \cdot n < 2\,000$:

f 4 *Frictional torque as a function of speed*

$$M_0 = f_0 \cdot 160 \cdot {d_M}^3 \cdot 10^{-7}$$

Frictional torque as a function of load for needle roller and cylindrical roller bearings:

f 5 *Frictional torque as a function of load*

$$M_1 = f_1 \cdot F \cdot d_M$$

Frictional torque as a function of load for ball bearings, tapered roller bearings and spherical roller bearings:

f 6 *Frictional torque as a function of load*

$$M_1 = f_1 \cdot P_1 \cdot d_M$$

Legend

M_R	Nmm	Total frictional torque
M_0	Nmm	Frictional torque as a function of speed
M_1	Nmm	Frictional torque as a function of load
N_R	W	Frictional power
n	min^{-1}	Operating speed
f_0	–	Bearing factor for frictional torque as a function of speed ➤ *58* | *1* and ➤ *58* | *2* to ➤ *60* | *13*
f_1	–	Bearing factor for frictional torque as a function of load ➤ *58* | *2* to ➤ *60* | *13*
ν	mm^2/s	Kinematic viscosity of lubricant at operating temperature. In the case of grease, the decisive factor is the viscosity of the base oil at operating temperature
F_r, F_a	N	Radial load for radial bearings, axial load for axial bearings
P_1	N	Decisive load for frictional torque. For ball bearings, tapered roller bearings and spherical roller bearings ➤ *61* | *3.3*
d_M	mm	Mean bearing diameter (d + D)/2.

Bearing factors

The bearing factors f_0 and f_1 are mean values from series of tests and correspond to the data in accordance with ISO 15312. They are valid for bearings after running-in and with uniform distribution of lubricant.
In the freshly greased state, the bearing factor f_0 can be two to five times higher.

If oil bath lubrication is used, the oil level must reach the centre of the lowest rolling element. If the oil level is higher, f_0 may be up to three times the value given in the table ➤ 58 | 1.

1
Increase in the bearing factor f_0, as a function of the oil level

h = *oil level*
d_M = *mean bearing diameter* $(d + D)/2$

① *Increase in the bearing factor f_0*

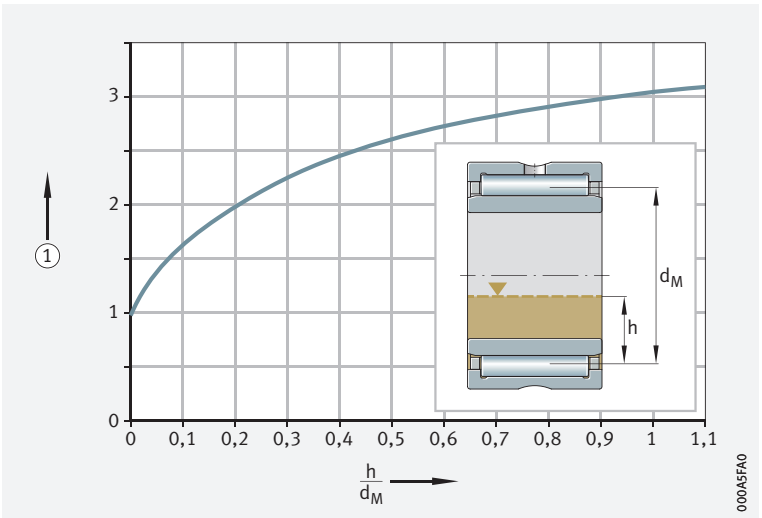

2
Bearing factor f_0, f_1 for needle roller bearings, drawn cup needle roller bearings with open ends or with closed end, needle roller and cage assemblies

Series	Bearing factor f_0		Bearing factor f_1
	Grease and oil mist	Oil bath and recirculating oil	
NA48	3	5	0,0005
NA49	4	5,5	
RNA48	3	5	
RNA49	4	5,5	
NA69	7	10	
RNA69			
NKI, NK, NKIS, NKS, NAO, RNO, RNAO, K	(12 · B)/(33 + d)	(18 · B)/(33 + d)	
NK..-TW, NKI..-TW, NK..-D	(10 · B)/(33 + d)	(15 · B)/(33 + d)	
HK, BK	(24 · B)/(33 + d)	(36 · B)/(33 + d)	
HN	(30 · B)/(33 + d)	(45 · B)/(33 + d)	

3
Bearing factor f_0, f_1 for cylindrical roller bearings, full complement

Series	Bearing factor f_0		Bearing factor f_1
	Grease and oil mist	Oil bath and recirculating oil	
SL1818	3	5	0,00055
SL1829	4	6	
SL1830	5	7	
SL1822	5	8	
SL0148, SL0248	6	9	
SL0149, SL0249	7	11	
SL1923	8	12	
SL1850	9	13	



4 *Bearing factor f_0, f_1 for cylindrical roller bearings with cage*

Series	Bearing factor f_0		Bearing factor f_1
	Grease and oil mist	Oil bath and recirculating oil	
LSL1923	1	3,7	0,00020
ZSL1923	1	3,8	0,00025
NU2..-E, NNU41	1,3	2	0,00030
NU3..-E			0,00035
NU4			0,00040
NU10, NU19			0,00020
NU22..-E	2	3	0,00040
NU23..-E	2,7	4	0,00040
NU30..-E, NN30..-E	1,7	2,5	0,00040

5 *Bearing factor f_0, f_1 for axial roller bearings*

Series	Bearing factor f_0		Bearing factor f_1
	Grease and oil mist	Oil bath and recirculating oil	
AXK, AXW	3	4	0,0015
810, K810, 811, K811	2	3	
812, K812			
893, K893			
894, K894			

6 *Bearing factor f_0, f_1 for combined bearings*

Series	Bearing factor f_0		Bearing factor f_1
	Grease and oil mist	Oil bath and recirculating oil	
ZARN, ZARF	3	4	0,0015
NKXR	2	3	
NX, NKX	2	3	$0,001 \cdot (P_0/C_0)^{0,33}$
ZKLN, ZKLF	4	6	
NKIA, NKIB	3	5	0,0005

7 *Bearing factor f_0, f_1 for tapered roller bearings*

Series	Bearing factor f_0		Bearing factor f_1
	Grease and oil mist	Oil bath and recirculating oil	
302, 303, 329, 320, 330, JK0S, T4CB, T4DB, T7FC	2	3	0,0004
313, 322, 323, 331, 332, T2EE, T2ED, T5ED	3	4,5	

8 *Bearing factor f_0, f_1 for axial and radial spherical roller bearings*

Series	Bearing factor f_0		Bearing factor f_1
	Grease and oil mist	Oil bath and recirculating oil	
213..-E1	2,3	3,5	$0,0005 \cdot (P_0/C_0)^{0,33}$
222..-E1	2,7	4	
223	3	4,5	$0,0008 \cdot (P_0/C_0)^{0,33}$
238, 239, 230			$0,00075 \cdot (P_0/C_0)^{0,5}$
231	3,7	5,5	$0,0012 \cdot (P_0/C_0)^{0,5}$
232	4	6	$0,0016 \cdot (P_0/C_0)^{0,5}$
240	4,3	6,5	$0,0012 \cdot (P_0/C_0)^{0,5}$
248, 249, 241	4,7	7	$0,0022 \cdot (P_0/C_0)^{0,5}$
292..-E	1,7	2,5	0,00023
293..-E	2	3	0,00030
294..-E	2,2	3,3	0,00033

9
Bearing factor f_0, f_1 for deep groove ball bearings

Series	Bearing factor f_0		Bearing factor f_1
	Grease and oil mist	Oil bath and recirculating oil	
618	1,1	1,7	$0{,}0005 \cdot (P_0/C_0)^{0,5}$
160, 60, 619	1,1	1,7	$0{,}0007 \cdot (P_0/C_0)^{0,5}$
622, 623	1,1	1,7	$0{,}0009 \cdot (P_0/C_0)^{0,5}$
62	1,3	2	
63, 630, 64	1,5	2,3	
60..-C	1,1	1,5	$0{,}0006 \cdot (P_0/C_0)^{0,5}$
62..-C	1,3	1,7	$0{,}0007 \cdot (P_0/C_0)^{0,5}$
63..-C	1,5	2	
42..-B	2,3	3,5	$0{,}0010 \cdot (P_0/C_0)^{0,5}$
43..-B	4	6	

10
Bearing factor f_0, f_1 for angular contact ball bearings

Series	Bearing factor f_0		Bearing factor f_1
	Grease and oil mist	Oil bath and recirculating oil	
708, 719, 70..-B	1,3	2	$0{,}001 \cdot (P_0/C_0)^{0,33}$
718..-B			
72..-B			
73..-B	2	3	
74..-B	2,5	4	
30..-B	2,3	3,5	
32..-B			
38..-B			
33..-B	4	6	
32..-BD	2	3	
33..-BD	3,5	5	

11
Bearing factor f_0, f_1 for self-aligning ball bearings

Series	Bearing factor f_0		Bearing factor f_1
	Grease and oil mist	Oil bath and recirculating oil	
10, 112	1,7	2	$0{,}0003 \cdot (P_0/C_0)^{0,4}$
12	1,7	2,5	
13	2,3	3,5	
22	2	3	
23	2,7	4	

12
Bearing factor f_0, f_1 for four point contact bearings

Series	Bearing factor f_0		Bearing factor f_1
	Grease and oil mist	Oil bath and recirculating oil	
QJ2	1,3	2	$0{,}001 \cdot (P_0/C_0)^{0,33}$
QJ3	2	3	
QJ10	1,3	2	

13
Bearing factor f_0, f_1 for axial deep groove ball bearings

Series	Bearing factor f_0		Bearing factor f_1
	Grease and oil mist	Oil bath and recirculating oil	
511, 512, 513, 514, 532, 533, 534	1	1,5	$0{,}0012 \cdot (F_a/C_0)^{0,33}$
522, 523, 524, 542, 543, 544	1,3	2	

3.3 Load P_1 for ball bearings, tapered roller bearings, spherical roller bearings

✎ P_1 for single bearings and bearing pairs

The calculation equations for load value P_1, which is the decisive load for frictional torque as a function of load M_1, are dependent on the bearing type ➤*61*|▦ *14*. If $P_1 \leqq F_r$, then $P_1 = F_r$.

The decisive load is based on DIN 732:2010.

▦ **14**
Decisive load P_1

Bearing type	Decisive load P_1	
	for single bearings	for bearing pairs
Deep groove ball bearings	$3{,}3 \cdot F_a - 0{,}1 \cdot F_r$	–
Angular contact ball bearings, single row	$F_a - 0{,}1 \cdot F_r$	$1{,}4 \cdot F_a - 0{,}1 \cdot F_r$
Angular contact ball bearings, double row	$1{,}4 \cdot F_a - 0{,}1 \cdot F_r$	–
Four point contact bearings	$1{,}5 \cdot F_a + 3{,}6 \cdot F_r$	–
Self-aligning ball bearings	$1{,}37 \cdot F_a/e - 0{,}1 \cdot F_r$ or F_r use the larger value	
Tapered roller bearings	$2 \cdot Y \cdot F_a$ or F_r use the larger value	$1{,}21 \cdot Y \cdot F_a$ or F_r use the larger value
Spherical roller bearings	$1{,}6 \cdot F_a/e$ if $F_a/F_r > e$ $F_r \cdot \{1 + 0{,}6 \cdot [F_a/(e \cdot F_r)]^3\}$ if $F_a/F_r \leqq e$	
Cylindrical roller bearings	F_r, the frictional component of axial load F_a must be taken into account using M_2	

3.4 Frictional torque for axially loaded radial cylindrical roller bearings

✎ *M_2 = frictional torque as a function of axial load*

In radial cylindrical roller bearings under axial load, sliding friction between the end faces of the rolling elements and the ribs on the rings leads to an additional frictional torque M_2. The total frictional torque M_R is calculated in accordance with ➤*62*| *f 7*, the frictional torque as a function of the axial load M_2 is calculated in accordance with ➤*62*| *f 8*.

f 7
Total frictional torque

$$M_R = M_0 + M_1 + M_2$$

Legend

M_R	Nmm	Total frictional torque for axially loaded cylindrical roller bearings
M_0	Nmm	Frictional torque as a function of speed
M_1	Nmm	Frictional torque as a function of radial load
M_2	Nmm	Frictional torque as a function of axial load ➤*62*| *f 8*.

f 8
Frictional torque as a function of axial load

$$M_2 = f_2 \cdot F_a \cdot d_M$$

Legend

f_2	–	Bearing factor as a function of the bearing series and of operating parameter $\nu \cdot n \cdot d_M$ ➤*63*| *2* and ➤*63*| *3*
F_a	N	Axial dynamic bearing load
d_M	mm	Mean bearing diameter (d + D)/2.

✎ *Higher axial load carrying capacity and lower axial frictional torque in bearings of TB design*

Bearings in TB design

In the case of bearings of TB design (rollers with a toroidal roller end), the axial load carrying capacity was significantly improved through the use of new calculation and manufacturing methods. Optimum contact conditions between the roller and rib are ensured by means of a special curvature of the roller end faces. As a result, axial surface pressures on the rib are significantly reduced and a lubricant film with improved load carrying capacity is achieved. Under normal operating conditions, wear and fatigue at the rib contact running and roller end faces is completely eliminated. In addition, axial frictional torque is reduced by up to 50%. The bearing temperature during operation is therefore significantly lower.

Bearing factor k_B

The bearing factor k_B in the equations takes into consideration the size and thus the load carrying capacity of the hydrodynamic contacts at the bearing ribs ➤*62*| *15*.

15
Bearing factor k_B

Series	Factor k_B
SL1818, SL0148	4,5
SL1829, SL0149	11
SL1830, SL1850	17
SL1822	20
LSL1923, ZSL1923	28
SL1923	30
NJ2..-E, NJ22..-E, NUP2..-E, NUP22..-E	15
NJ3..-E, NJ23..-E, NUP3..-E, NUP23..-E	20
NJ4	22

Bearing factor f_2 for cylindrical roller bearings

The bearing factor f_2 can vary significantly. The values in the diagrams are valid for recirculating oil lubrication with an adequate quantity of oil ➤63| 2 and ➤63| 3; the curves should not be extrapolated.

✎ f_2 as a function of operating parameter and series

➤63| 2 gives the values for bearings without toroidal end face, ➤63| 3 gives the factors for cylindrical roller bearings with toroidal end face (TB design).

2
Radial cylindrical roller bearing in standard design, bearing factor f_2 as a function of the operating parameter $\nu \cdot n \cdot d_M$

f_2 = *bearing factor*
ν = *operating viscosity*
n = *operating speed*
d_M = *mean bearing diameter*
$\nu \cdot n \cdot d_M$ = *operating parameter*
F_a = *axial dynamic bearing load*
A = *bearing parameter*

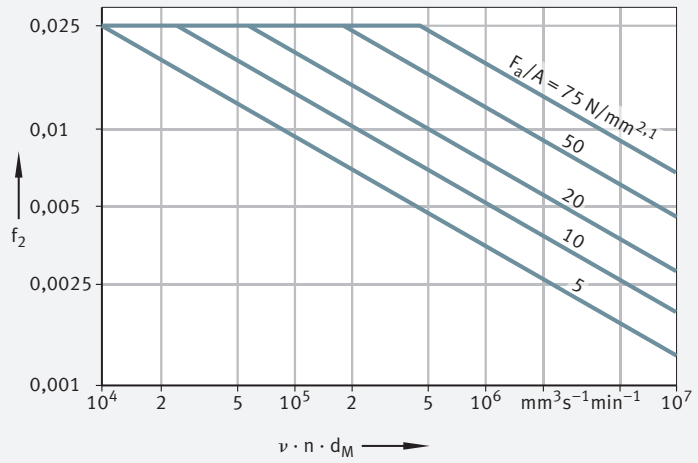

3
Radial cylindrical roller bearing in TB design, bearing factor f_2 as a function of the operating parameter $\nu \cdot n \cdot d_M$

f_2 = *bearing factor*
ν = *operating viscosity*
n = *operating speed*
d_M = *mean bearing diameter*
$\nu \cdot n \cdot d_M$ = *operating parameter*
F_a = *axial dynamic bearing load*
A = *bearing parameter*

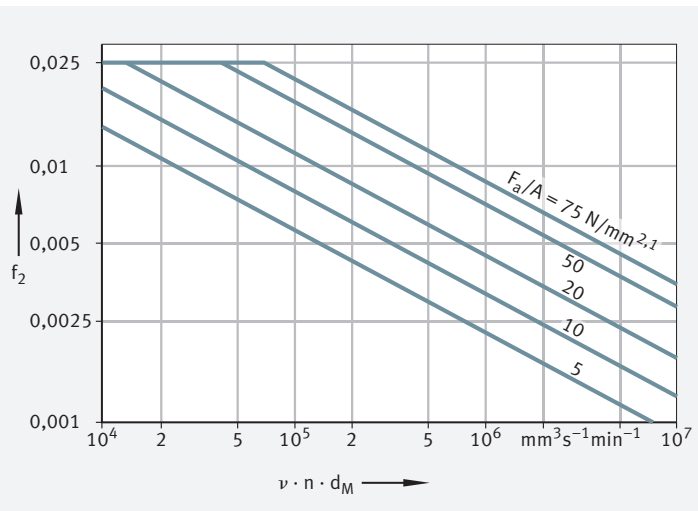

✎ Bearing parameter A for calculating M_2

In order that the bearing factor f_2 can be determined for the calculation of M_2 in ➤63| 2 and ➤63| 3, bearing parameter A must be obtained in accordance with ➤63| 9.

9
Bearing parameter

$$A = k_B \cdot 10^{-3} \cdot d_M^{2,1}$$

Legend

A	–	Bearing parameter
k_B	–	Bearing factor as a function of the bearing series ➤62| 15
d_M	mm	Mean bearing diameter (d + D)/2.

4 Speeds

The calculation of reference speeds is standardised in ISO 15312. The stated reference speeds have been calculated in accordance with this standard.

4.1 Limiting speed

The limiting speed n_G is based on practical experience and takes account of additional criteria such as smooth running, sealing function and centrifugal forces.

The limiting speeds indicated in the product tables must not be exceeded even under favourable operating conditions without prior consultation with Schaeffler.

4.2 Thermal speed rating

$n_{\vartheta r}$ is used to calculate n_ϑ

The thermal speed rating $n_{\vartheta r}$ is used as an ancillary value when calculating the thermally safe operating speed n_ϑ. This is the speed at which, under defined reference conditions, a bearing operating temperature of +70 °C is achieved.

The thermal speed rating is not a speed limit for the application of a bearing. It is primarily for the purpose of comparing the speed suitability of different bearing types under defined reference conditions.

A speed limit taking account of the thermal balance can be calculated using the thermally safe operating speed.

Reference conditions

The reference conditions are based on the normal operating conditions of the most significant bearing types and sizes.

They are defined as follows in ISO 15312:

- mean ambient temperature ϑ_{Ar} = +20 °C
- mean bearing temperature at the outer ring ϑ_r = +70 °C
- load on radial bearings $P_1 = 0{,}05 \cdot C_{0r}$
- load on axial bearings $P_1 = 0{,}02 \cdot C_{0a}$
- heat dissipation via the bearing seating surfaces ➤*64*| *1* to ➤*64*| *4*:

for radial bearings, bearing seat $A_r \leqq 50\,000$ mm² ➤*64*| *1*:

1 *Heat flow density*

$$q_r = 0{,}016 \text{ W/mm}^2$$

for radial bearings, bearing seat $A_r > 50\,000$ mm² ➤*64*| *2*:

2 *Heat flow density*

$$q_r = 0{,}016 \cdot \left(\frac{A_r}{50\,000}\right)^{-0{,}34} \text{ W/mm}^2$$

for axial bearings, bearing seat $A_r \leqq 50\,000$ mm² ➤*64*| *3*:

3 *Heat flow density*

$$q_r = 0{,}020 \text{ W/mm}^2$$

for axial bearings, bearing seat $A_r > 50\,000$ mm² ➤*64*| *4*:

4 *Heat flow density*

$$q_r = 0{,}020 \cdot \left(\frac{A_r}{50\,000}\right)^{-0{,}16} \text{ W/mm}^2$$

The following lubricants and lubrication methods are suitable:
- conventional mineral oils without EP additives and with the following kinematic viscosity ν_r at $\vartheta_r = +70$ °C,
  - for radial rolling bearings $\nu_r = 12$ mm²/s (ISO VG 32)
  - for axial rolling bearings $\nu_r = 24$ mm²/s (ISO VG 68)
- oil bath lubrication with an oil level up to the centre of the lowest rolling element
- lubricant contamination within the permissible values
- grease lubrication of radial bearings using a lithium soap grease with a mineral oil base and no EP additives (base oil viscosity 22 mm²/s at +70 °C); grease filling corresponds to 30% of the free bearing cavity

4.3 Thermally safe operating speed

The thermally safe operating speed n_ϑ is calculated in accordance with DIN 732:2010. The basis for the calculation is the heat balance in the bearing, the equilibrium between the frictional power as a function of speed and the heat dissipation as a function of temperature. When conditions are in equilibrium, the bearing temperature is constant.

Preconditions for calculation

The permissible operating temperature determines the thermally safe operating speed n_ϑ of the bearing. The preconditions for calculation are correct mounting, normal operating clearance and constant operating conditions.

Calculation not applicable

The calculation method is not valid for:
- sealed bearings with contact seals, since the maximum speed is restricted by the permissible sliding speed at the seal lip
- yoke and stud type track rollers
- aligning needle roller bearings
- axial deep groove and axial angular contact ball bearings

Limiting speed n_G

The limiting speed n_G must always be observed.

Calculate thermally safe operating speed

Precondition

In order to calculate the thermally safe operating speed n_ϑ at a constant operating temperature ϑ, the frictional power generated and the total dissipated heat flow of the rolling bearing must be in equilibrium ➤65| ƒ5, Parameters ➤68.

ƒ5 Equilibrium

$$N_R = \dot{Q}$$

Equilibrium between frictional power and heat flow

The generated frictional power of the rolling bearing is calculated using the total frictional torque ➤65| ƒ6. The total dissipated heat flow $\dot{Q}$ is calculated in accordance with ➤65| ƒ7.

The frictional power is equal to the dissipated heat flow ➤65| ƒ8.

ƒ6 Frictional power

$$N_R = M_R \cdot \omega = \left[10^{-7} \cdot f_0 \cdot \left(\nu \cdot n_\vartheta\right)^{\frac{2}{3}} \cdot {d_M}^3 + f_1 \cdot P_1 \cdot d_M \right] \cdot \frac{\pi \cdot n_\vartheta}{30 \cdot 10^3}$$

ƒ7 Total dissipated heat flow

$$\dot{Q} = \dot{Q}_S + \dot{Q}_L + \dot{Q}_E$$

ƒ8 Equilibrium between frictional power and heat flow

$$\left[10^{-7} \cdot f_0 \cdot \left(\nu \cdot n_\vartheta\right)^{\frac{2}{3}} \cdot {d_M}^3 + f_1 \cdot P_1 \cdot d_M \right] \cdot \frac{\pi \cdot n_\vartheta}{30 \cdot 10^3} = \dot{Q}_S + \dot{Q}_L + \dot{Q}_E$$

✎ *Conversion to more manageable form*

➤*65*| *f 8* can only be solved iteratively. The introduction of the lubricant parameter K_L, the load parameter K_P and the speed ratio f_n has made this more manageable ➤*66*| *f 9*.

f 9
Equilibrium in more manageable form

$$K_L \cdot f_n^{\frac{5}{3}} + K_P \cdot f_n = 1$$

✎ *Speed ratio f_n*

The speed ratio f_n can be calculated by means of iteration or in the normal operating range of $0{,}01 \leqq K_L \leqq 10$ and $0{,}01 \leqq K_P \leqq 10$ ➤*66*| *f 10* and ➤*66*| *1*.

f 10
Speed ratio

$$f_n = \frac{490{,}77}{1 + 498{,}78 \cdot K_L^{0{,}599} + 852{,}88 \cdot K_P^{0{,}963} - 504{,}5 \cdot K_L^{0{,}055} \cdot K_P^{0{,}832}}$$

1
Speed ratio f_n as a function of lubricant parameter and load parameter

f_n = *speed ratio*
K_L = *lubricant parameter*
K_P = *load parameter*

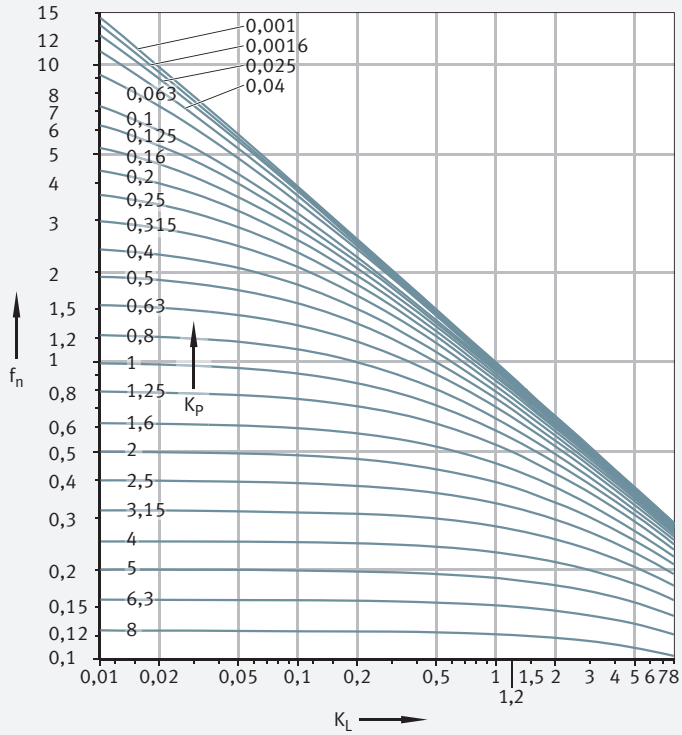

Thermally safe operating speed

The thermally safe operating speed n_ϑ is calculated by multiplying the thermal speed rating $n_{\vartheta r}$ by the speed ratio f_n ➤67| 11.

11 *Thermally safe operating speed*

$$n_\vartheta = n_{\vartheta r} \cdot f_n$$

Lubricant parameter K_L

The lubricant parameter K_L is calculated in accordance with ➤67| 12.

12 *Lubricant parameter*

$$K_L = 10^{-6} \cdot \frac{\pi}{30} \cdot n_{\vartheta r} \cdot \frac{10^{-7} \cdot f_0 \left(\nu \cdot n_{\vartheta r}\right)^{\frac{2}{3}} \cdot {d_M}^3}{\dot{Q}}$$

Load parameter K_P

The load parameter K_P is calculated in accordance with ➤67| 13.

13 *Load parameter*

$$K_P = 10^{-6} \cdot \frac{\pi}{30} \cdot n_{\vartheta r} \cdot \frac{f_1 \cdot P_1 \cdot d_M}{\dot{Q}}$$

Heat dissipation via the bearing seating surfaces

Heat dissipation via the bearing seating surfaces is calculated in accordance with ➤67| 14.

14 *Heat dissipation via the bearing seating surfaces*

$$\dot{Q}_S = k_q \cdot A_S \cdot \Delta\vartheta_A$$

2 *Heat transfer coefficient k_q as a function of the bearing seating surface*

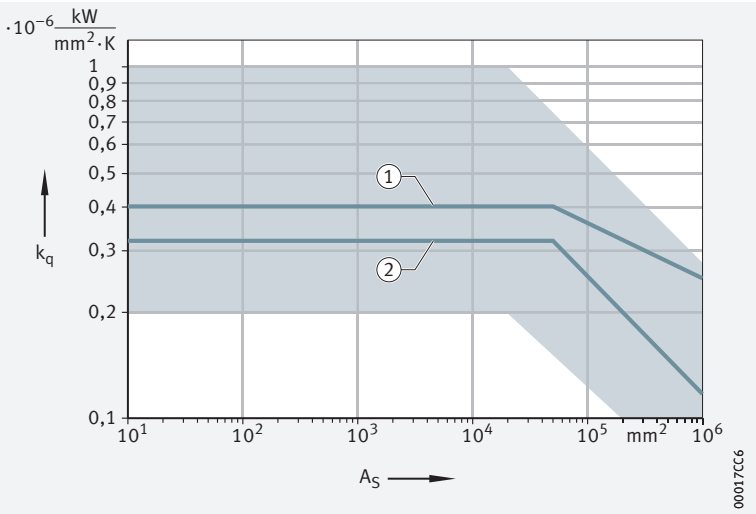

k_q = *heat transfer coefficient, as a function of the bearing seating surface*

A_S = *heat-dissipating bearing seating surface*

① *Reference condition for axial bearings*

② *Reference condition for radial bearings*

Heat dissipation via the lubricant

Heat dissipation via the lubricant is calculated in accordance with ➤67| 15.

15 *Heat dissipation via the lubricant*

$$\dot{Q}_L = 0{,}0286 \frac{\text{kW}}{\text{l/min} \cdot \text{K}} \cdot \dot{V}_L \cdot \Delta\vartheta_L$$

Legend

N_R	W	Frictional power
$\dot{Q}$	kW	Total dissipated heat flow
M_R	Nmm	Total frictional torque
f_0	–	Bearing factor for frictional torque as a function of speed
ν	mm^2/s	Kinematic viscosity of the lubricant at operating temperature
n_ϑ	min^{-1}	Thermally safe operating speed
d_M	mm	Mean bearing diameter (D + d)/2
d	mm	Bearing bore diameter
D	mm	Bearing outside diameter
f_1	–	Bearing factor for frictional torque as a function of load
P_1	N	Decisive load: radial load for radial bearings, axial load for axial bearings.
$\dot{Q}_S$	kW	Heat flow dissipated via the bearing seating surfaces
$\dot{Q}_L$	kW	Heat flow dissipated by the lubricant
$\dot{Q}_E$	kW	Heat flow. For heating by external source (+), for cooling by external source (–)
K_L	–	Lubricant parameter
f_n	–	Speed ratio
K_P	–	Load parameter
$n_{\vartheta r}$	min^{-1}	Thermal speed rating; see product tables
k_q	10^{-6} kW/($mm^2 \cdot K$)	Heat transfer coefficient, as a function of the bearing seating surface ➤67| 2. This is dependent on the housing design and size, the housing material and the installation position. For normal installation, the coefficient of heat transition for bearing seating surfaces up to 25 000 mm^2 is between $0{,}2 \cdot 10^{-6}$ kW/($mm^2 \cdot K$) and $1{,}0 \cdot 10^{-6}$ kW/($mm^2 \cdot K$)
A_S	mm^2	Heat-dissipating bearing seating surface: In general, $A_S = A_r$
A_r	mm^2	Heat-dissipating bearing seating surface under reference conditions.
		Radial bearings: $A_r = \pi \cdot B \cdot (D + d)$
		Axial bearings: $A_r = (\pi/2) \cdot (D^2 - d^2)$
		Tapered roller bearings: $A_r = \pi \cdot T \cdot (D + d)$
		Axial spherical roller bearings: $A_r = (\pi/4) \cdot (D^2 + {d_1}^2 - {D_1}^2 - d^2)$
$\Delta\vartheta_A$	K	Difference between mean bearing temperature and ambient temperature
$\dot{V}_L$	l/min	Oil flow
$\Delta\vartheta_L$	K	Difference between oil inlet temperature and oil outlet temperature

5 Noise

5.1 Schaeffler Noise Index

The Schaeffler Noise Index (SGI) has been developed as a new feature for comparing the noise level of different bearing types and series. As a result, a noise evaluation of rolling bearings can now be carried out for the first time.

The SGI value is based on the maximum permissible noise level of a bearing in accordance with internal standards, which is calculated on the basis of ISO 15242. In order that different bearing types and series can be compared, the SGI value is plotted against the basic static load rating C_0.

This permits direct comparisons between bearings with the same load carrying capacity. The upper limit value is given in each of the diagrams. This means that the average noise level of the bearings is lower than illustrated in the diagram.

The Schaeffler Noise Index is an additional performance characteristic in the selection of bearings for noise-sensitive applications. The specific suitability of a bearing for an application in terms of installation space, load carrying capacity or speed limit for example, must be checked independently of this.

Until now, the Noise Index has only been available for the main series of radial deep groove ball bearings, radial angular contact ball bearings, tapered roller bearings and cylindrical roller bearings. Additional bearing types and series will be updated and introduced in subsequent publications.

Further information:

- ***medias*** *https://medias.schaeffler.com*

Example of Noise Index calculation

If the requisite basic load rating is known for an application, the bearing arrangement can also be designed using the Noise Index as an additional performance characteristic. If the requisite basic static load rating is C_0 = 20 300 N for example, various ball bearings are available with a different SGI value ➤*69*| *1*. As a result, the calculation can be carried out for the bearing application using the smallest SGI value. Bearings of Generation C offer a particular advantage here.

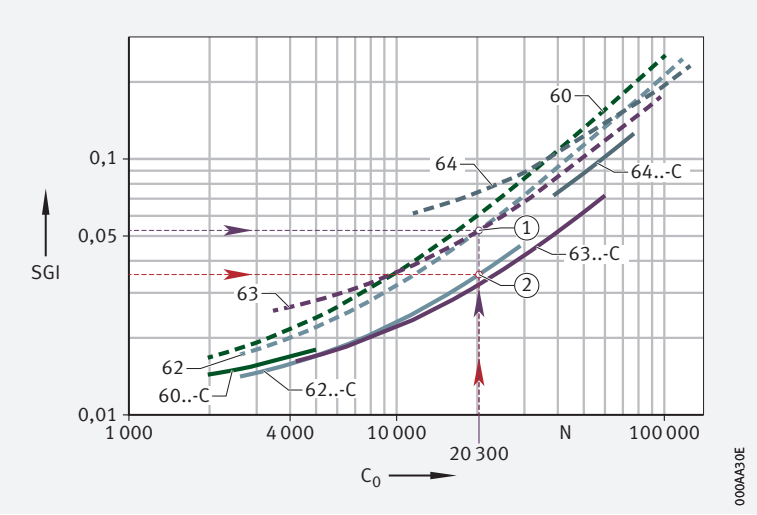

1
Example: comparison of deep groove ball bearings using the Schaeffler Noise Index

SGI = *Schaeffler Noise Index*
C_0 = *basic static load rating*
① = *standard series 62*
② = *series 62..-C (Generation C)*

6 Lubrication

6.1 Basic principles

Lubrication and maintenance are important for the reliable operation and long operating life of rolling bearings.

Functions of the lubricant

The lubricant should:

- form a lubricant film on the contact surfaces that is sufficiently capable of supporting loads and thus preventing wear and premature fatigue
- dissipate heat in the case of oil lubrication
- give additional sealing of the bearing, in the case of grease lubrication, against the entry of both solid and fluid contaminants
- dampen running noise
- give protection against corrosion

Selection of the type of lubrication

Oil or grease lubrication

It should be determined as early as possible in the design process whether bearings should be lubricated using grease or oil.

The following factors are decisive in determining the type of lubrication and quantity of lubricant:

- the operating conditions
- the type and size of the bearing
- the adjacent construction
- the lubricant feed

Grease lubrication

Criteria for grease lubrication

In the case of grease lubrication, the following criteria must be considered:

- very little design work required
- the sealing action
- the reservoir effect
- long operating life with little maintenance work (lifetime lubrication possible in certain circumstances)
- if relubrication is required, it may be necessary to provide collection areas for old grease and feed ducts
- no heat dissipation by the lubricant
- no rinsing out of wear debris and other particles

Oil lubrication

Criteria for oil lubrication

In the case of oil lubrication, the following criteria must be considered:

- good lubricant distribution and supply to contact areas
- dissipation of heat possible from the bearing (significant principally at high speeds and/or loads)
- rinsing out of wear debris
- very low friction losses with minimal quantity lubrication
- more work required on feed and sealing

Under extreme operating conditions (such as very high temperatures, vacuum, aggressive media), it may be possible to use special lubrication methods, such as solid lubricants, in consultation with Schaeffler.

Design of lubricant feeds

Observe guidelines

The feed lines and lubrication holes in the housings and shafts ➤71 | 1 and ➤71 | 2

- should lead directly to the lubrication hole in the rolling bearing
- should be as short as possible

A separate feed must be provided for each bearing.
Ensure that the feed lines are filled ➤71 | 1; the feed line should be bled if necessary. Follow the instructions provided by the lubrication device manufacturer.

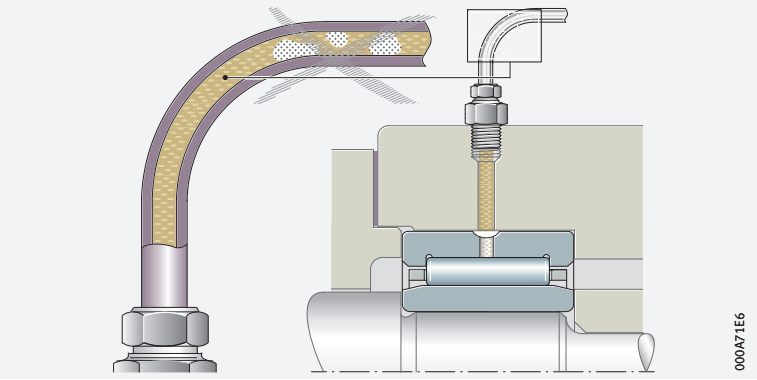

1
Lubricant feed lines

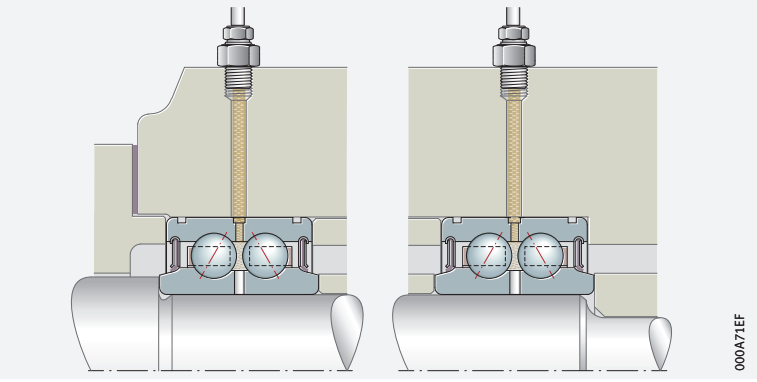

2
Arrangement of feed lines to more than one bearing on a shaft

Further information

Comprehensive information on the lubrication of rolling bearings is contained in Technical Product Information TPI 176. This publication can be requested from Schaeffler.

6.2 Grease lubrication

Greases can be differentiated in terms of their thickeners of varying composition and base oils. The base oils of greases are covered by the information in the section Oil lubrication ➤81.

Composition of a grease

Conventional greases have metal soaps as thickeners and a mineral base oil ➤72 | 3. They also contain additives. These have a specific influence on, for example, the characteristics in relation to wear prevention, corrosion prevention or resistance to ageing. These combinations of additives are not, however, fully effective across every temperature and load range.

Greases exhibit widely varying behaviour in response to environmental influences such as temperature and moisture.

3
Type of grease

① *Thickener*
② *Additives*
③ *Base oil*
④ *Grease*

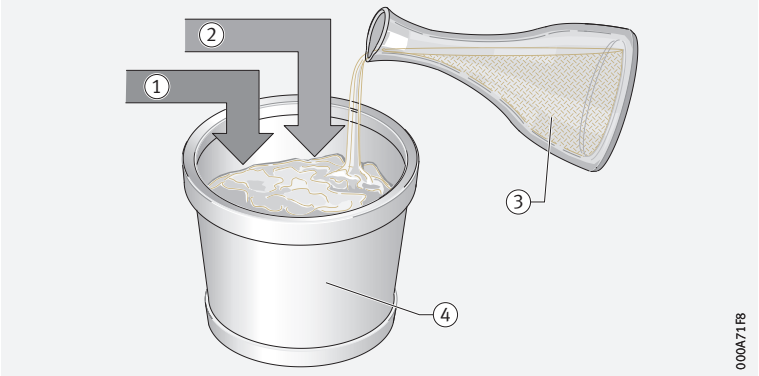

Lubricants must always be checked for their compatibility with:
- other lubricants
- anti-corrosion agents
- thermoplastics, thermosets and elastomers
- light and non-ferrous metals
- coatings
- colouring agents and paints
- and the environment. When considering compatibility with the environment, attention must be paid to toxicity, biodegradability and water pollution class

✎ *Type of grease*

The characteristics of a grease are dependent on:
- the base oil
- the viscosity of the base oil (this is significant for the speed range)
- the thickener (the shear strength is significant for the speed range)
- the additives

✎ *Consistency of greases*

Greases are subdivided into consistency classes (NLGI classes to DIN 51818). For rolling bearings, classes 1, 2, 3 should be used in preference ➤*72* | 4.

4
Consistency of greases

NLGI classes

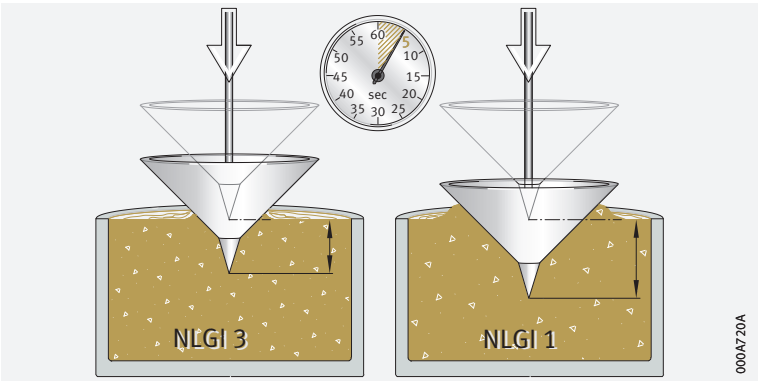

Selection of suitable grease

✎ *The grease is determined by the operating conditions*

Rolling bearing greases K to DIN 51825 are suitable.

Greases should be selected in accordance with the operating conditions of the bearing:
- temperature
- pressure conditions ➤*74*
- speed ➤*74*
- water and moisture ➤*74*

Operating temperature range

✎ The grease must correspond to the operating temperatures

The operating temperature range of the grease must correspond to the range of possible operating temperatures in the rolling bearing.

Grease manufacturers indicate an operating temperature range for their rolling bearing greases K to DIN 51825.

The upper value is determined in accordance with DIN 51821 by means of testing on the FAG rolling bearing grease test rig FE9. At the upper operating temperature, a 50% failure probability rate (F_{50}) of at least 100 hours must be achieved in this test.

The lower value is defined in accordance with DIN 51825 by means of flow pressure. The flow pressure of a grease is the pressure required to press a stream of grease through a defined nozzle. For greases of type K, the flow pressure at the lower operating temperature must be less than 1 400 mbar.

The use of flow pressure in determining the lower operating temperature only indicates, however, whether the grease can be moved at this temperature. This cannot be used to give an indication of its suitability for use in rolling bearings at low temperatures.

In addition to the lower operating temperature of a grease, therefore, the low temperature frictional torque is also determined in accordance with ASTM D 1478 or IP 186/93. At the lower operating temperature, the starting torque must not exceed 1 000 Nmm and the running torque must not exceed 100 Nmm.

Schaeffler recommends that greases should be used in accordance with the bearing temperature normally occurring in the standard operating range, in order to achieve a reliable lubricating action and an acceptable grease operating life ➤73 | 5.

At low temperatures, greases release very little base oil. This can result in lubricant starvation. Schaeffler therefore recommends that greases are not used below the lower continuous limit temperature $\vartheta_{lower\ limit}$ on a permanent basis ➤73 | 5. This is approx. 20 K above the lower operating temperature of the grease as stated by the grease manufacturer.

The reference temperature $\vartheta_{reference}$ should not be exceeded in order to avoid a temperature-induced reduction in the grease operating life, see Grease operating life ➤75.

! At consistently low temperatures (for example in cold store applications), it must be ensured that the grease releases sufficient oil in relation to the bearing type.

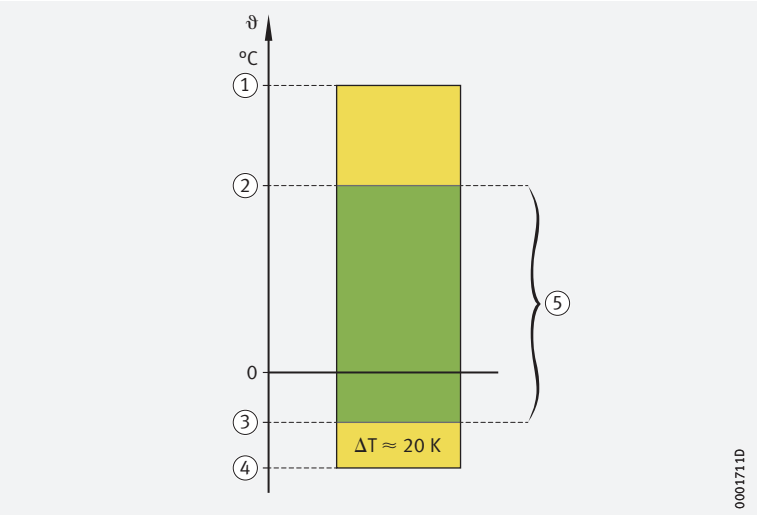

5
Operating temperature range

ϑ = operating temperature
ΔT = temperature difference

1. *Upper operating temperature according to grease manufacturer*
2. *$\vartheta_{reference}$*
3. *$\vartheta_{lower\ limit}$*
4. *Lower operating temperature according to grease manufacturer*
5. *Standard operating range*

Pressure properties

The pressure properties are dependent on the viscosity

The viscosity at operating temperature must be sufficiently high for the formation of a lubricant film capable of supporting loads. At high loads, greases with EP characteristics (“extreme pressure”) and high base oil viscosity should be used (KP grease to DIN 51825). Such greases should also be used for bearings with substantial sliding or line contact.

Silicone greases should only be used at low loads ($P \leqq 0{,}03 \cdot C$).

Greases with solid lubricants should preferably be used for applications with mixed or boundary friction conditions. The solid lubricant particle size must not exceed 5 µm.

Speed

Speed parameter $n \cdot d_M$ is a criterion for grease selection

Greases should be selected in accordance with the speed parameter $n \cdot d_M$ for grease ➤*90*

- For rolling bearings running at high speeds or with a low starting torque, greases with a high speed parameter should be used
- For bearings running at low speeds, greases with a low speed parameter should be used

Under centrifugal accelerations > 500 · g, separation (of the thickener and base oil) may occur. In this case, please consult the lubricant manufacturer.

The consistency of polycarbamide greases can be altered by shear stresses to a greater extent than that of metal soap greases.

Water and moisture

Water reduces the operating life

Water in the grease has a highly detrimental effect on the operating life of bearings:

- the static behaviour of greases in the presence of water is assessed in accordance with DIN 51807 ➤*74*
- the anti-corrosion characteristics can be tested according to DIN 51802 (Emcor test) – information is given in the grease manufacturer’s data sheets

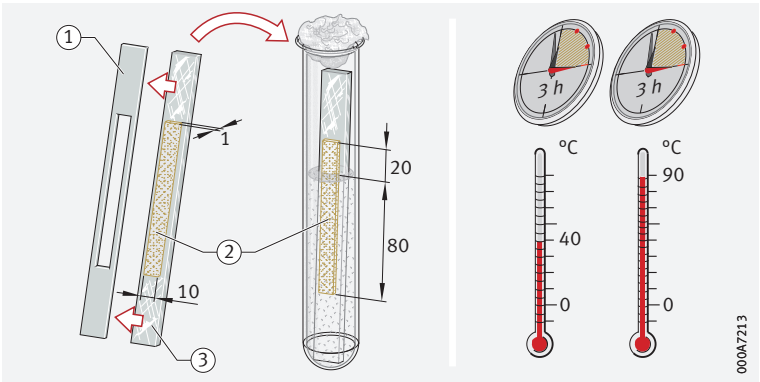

6
Behaviour in the presence of water in accordance with DIN 51807

① *Blank*
② *Grease sample*
③ *Glass slide*

Grease operating life

The grease operating life t_{fG} is a decisive factor where this is below the calculated bearing life and the bearings are not relubricated.

A guide value can be determined in approximate terms in accordance with ➤75| 1:

1
Guide value for grease operating life

$$t_{fG} = t_f \cdot K_T \cdot K_P \cdot K_R \cdot K_U$$

Legend

t_{fG}	h	Guide value for grease operating life
t_f	h	Basic grease operating life
K_T, K_P, K_R, K_U	–	Correction factors for temperature, load, oscillation and environment.

If a grease operating life > 3 years is required, this must be agreed in consultation with the lubricant manufacturer.

Guidelines on calculating the grease operating life ➤76.

Basic grease operating life

This applies under the preconditions according to ➤75| 1.

1
Preconditions for the basic grease operating life

	Precondition
Bearing temperature	Reference temperature $\vartheta_{reference}$
Load ratio	$C_0/P = 20$
Speed and load	Constant
Load in main direction	Radial in radial bearings, axial in axial bearings
Axis of rotation	Horizontal for radial bearings
Inner ring	Rotating
Environmental influences	No disruptive influences

The basic grease operating life t_f is dependent on the bearing-specific speed parameter $k_f \cdot n \cdot d_M$ and is calculated using ➤75| 7.

Legend

k_f	–	Bearing type factor ➤76| 2
n	min^{-1}	Operating speed or equivalent speed
d_M	mm	Mean bearing diameter (d + D)/2.

Calculation of basic grease operating life

7
Calculation of basic grease operating life

t_f = *basic grease operating life*
$k_f \cdot n \cdot d_M$ = *bearing-specific speed parameter*

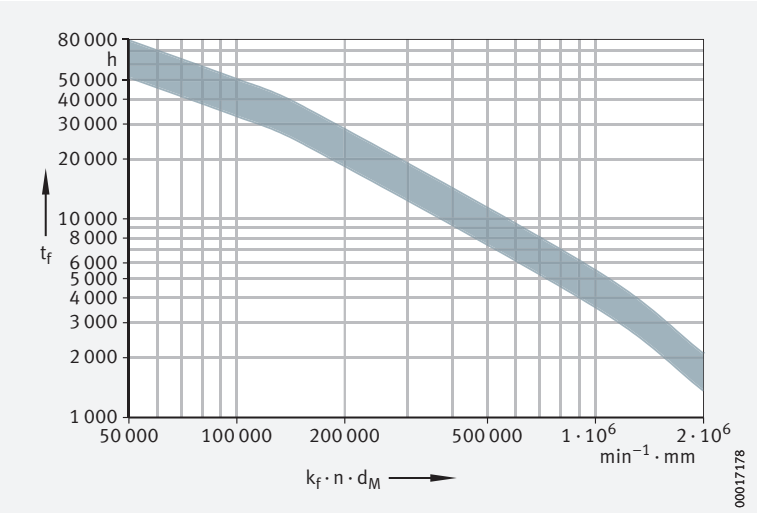

2 *Factor k_f – as a function of bearing type*

Bearing type	Factor k_f
Deep groove ball bearings, single row, Generation C	0,8
Deep groove ball bearings, single row	1
Deep groove ball bearings, double row	1,5
Angular contact ball bearings, single row	1,6
Angular contact ball bearings, single row, X-life	1,3
Angular contact ball bearings, double row	2
Angular contact ball bearings, double row, X-life	1,6
Four point contact bearings	1,6
Four point contact bearings, X-life	1,3
Self-aligning ball bearings	1,45
Axial deep groove ball bearings	5,5
Axial angular contact ball bearings, single row	1,8
Axial angular contact ball bearings, double row	2
Cylindrical roller bearings, single row	2
Cylindrical roller bearings LSL, ZSL	3
Cylindrical roller bearings, double row	3
Cylindrical roller bearings, full complement	6
Tapered roller bearings	4
Spherical roller bearings	8
Needle roller and cage assemblies, needle roller bearings	3,6
Drawn cup needle roller bearings	4,2
Yoke type track rollers, stud type track rollers with cage, stud type track rollers with full complement cylindrical roller set	20
Yoke type track rollers, stud type track rollers, full complement needle roller set	40
Ball bearing type track rollers, single row	1
Ball bearing type track rollers, double row	2
Yoke type track rollers PWTR, stud type track rollers PWKR	6
Crossed roller bearings	4,4
Axial needle roller bearings, axial cylindrical roller bearings	58
Radial insert ball bearings, housing units	1

Guidelines on calculating the grease operating life

For a more precise calculation, the use of BEARINX or BEARINX-online is recommended.

Combined rolling bearings

The radial and axial bearing components must be calculated separately; the decisive value is the shorter grease operating life.

Rotating outer ring

If the outer ring rotates, there may be a reduction in the grease operating life.

In the case of yoke and stud type track rollers:

- the angular misalignment must be zero
- the effect of the rotating outer ring on the grease operating life is taken into consideration in the bearing type factor k_f

Restrictions of the calculation

The grease operating life cannot be determined using the method described in the following cases:

- if the grease can leave the bearing arrangement
  - there is excessive evaporation of the base oil
  - in bearing positions without seals
  - in axial bearings with a horizontal axis of rotation
- if air is sucked into the rolling bearing during operation
  - this can cause the grease to oxidise
- for bearing arrangements that have a vertical shaft
- in combined rotary and linear motion (the grease is distributed over the whole stroke length)
- if contamination, water or other fluids enter the bearing
- for spindle bearings
- for drawn cup roller clutches
- for screw drive bearings
- for high precision bearings for combined loads
- for super precision cylindrical roller bearings NN30

The additional guidelines on lubrication in the product chapters must be observed.

Correction factors for determining the grease operating life

Temperature factor K_T

If the bearing temperature is higher than the reference temperature $\vartheta_{reference}$, K_T must be determined from the diagram ➤77|8.

The diagram must not be used if the bearing temperature is higher than the upper operating temperature of the grease used ➤90|6.
If necessary, a different grease must be selected or contact must be made with Schaeffler.

Depending on the grease quality, temperature factors $K_T > 1$ are also possible below the reference temperature.

8 *Temperature factor*

K_T = *temperature factor*

① *K above* $\vartheta_{reference}$
②, ③ ➤90|6 ➤92|7

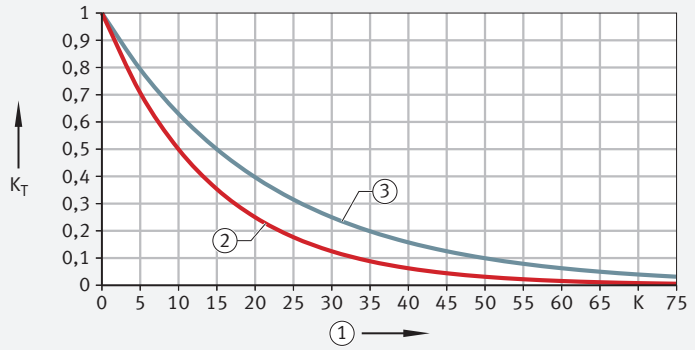

Load factor K_P

The factor K_P is dependent on the bearing and describes the reduction at higher load (this places greater strain on the grease) ➤78|9 and ➤78|3.

9
Load correction factor K_P

K_P = *load correction factor*
C_0/P = *ratio between basic static load rating and equivalent dynamic bearing load*

①, ②, ③, ④ ➤ *78* | 3

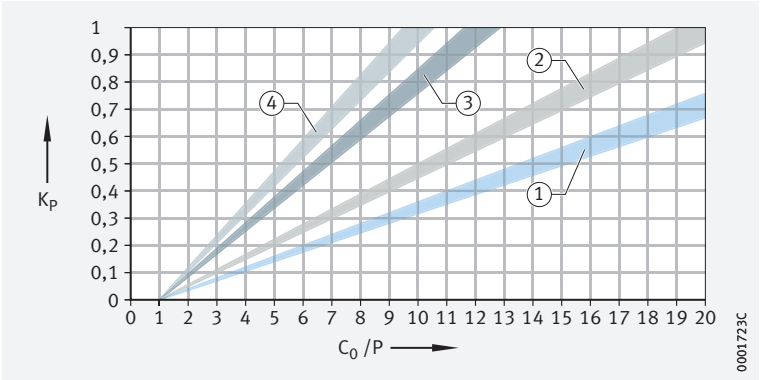

3
Correction factor for load K_P

Curve ➤ *78* | 9	Bearing type
①	Axial angular contact ball bearings, double row
	Axial deep groove ball bearings
	Axial needle roller bearings, axial cylindrical roller bearings
	Crossed roller bearings
②	Spherical roller bearings with central rib
	Needle roller and cage assemblies, needle roller bearings
	Drawn cup needle roller bearings
	Cylindrical roller bearings, double row
	Yoke type track rollers PWTR, stud type track rollers PWKR
	Yoke and stud type track rollers with cage, full complement cylindrical roller set
	Yoke and stud type track rollers, full complement needle roller set
③	Four point contact bearings
	Cylindrical roller bearings LSL, ZSL
	Cylindrical roller bearings, full complement
	Cylindrical roller bearings, single row (constant or alternating load)
	Tapered roller bearings
	Barrel roller bearings
	Spherical roller bearings without central rib (E1)
④	Deep groove ball bearings (single or double row)
	Angular contact ball bearings (single or double row)
	Self-aligning ball bearings
	Ball bearing track rollers (single or double row)
	Radial insert ball bearings, housing units.

✎ *Oscillation factor K_R*

The factor K_R applies for an angle of oscillation $\varphi < 180°$ ➤ *79* | *10*. Oscillating motion places a greater strain on the grease than does rotating motion.

In order to reduce fretting corrosion, the lubrication interval should be reduced.

If the rolling elements do not undergo complete rotation, please consult Schaeffler.

10
Correction factor for oscillation K_R

K_R = *correction factor for oscillation*
φ = *angle of oscillation*
① *Angle of oscillation $\varphi < 5°$ requires special lubricants*

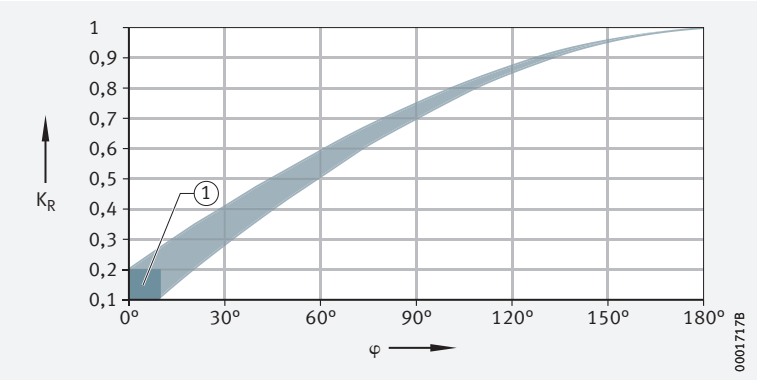

Environmental factor K_U

The factor K_U takes account of the influences of moisture, shaking forces, slight vibration (leading to fretting corrosion) and shocks ➤*79*|▦*4*.
It does not take account of extreme environmental influences such as water, aggressive media, contamination, radiation and extreme vibrations such as those occurring in vibratory machines.

In relation to contamination, the influence of contamination on rating life calculation must also be noted.

4
Environment factor K_U

Environmental influence	Factor K_U
Slight (e.g. test rig)	1
Moderate (standard)	0,8
Heavy (e.g. outdoor application)	0,5

Relubrication intervals

Observe lubrication intervals

Where rolling bearings are relubricated, attention must be paid to the lubrication interval in order to ensure reliable function of the bearings.

The precise lubrication interval should be determined by tests conducted under application conditions. To do this:

- sufficiently long observation periods must be used
- the condition of the grease must be checked at regular intervals

For reasons of operational reliability, relubrication intervals of > 1 year are not recommended.

Lubrication interval guide value

Experience shows that the guide value for most applications is ➤*79*|𝑓⃞*2*.

𝑓⃞2
Guide value for relubrication interval

$$t_{fR} = 0{,}5 \cdot t_{fG}$$

Legend

t_{fR}	h	Guide value for relubrication interval
t_{fG}	h	Guide value for grease operating life ➤*75*.

Relubrication conditions

The grease used for relubrication must be the same as that used in initial greasing. If other greases are used, the miscibility and compatibility of the greases must be checked ➤*80*.

Relubrication quantity

Due to the compact construction of the bearings, relubrication should be carried out using 50% to 80% of the initial greasing quantity (recommendation).

If feed lines filled with air are present, the filling volume of the feed lines should be included in calculation of the relubrication quantity.

Relubrication

Relubrication should always be carried out as follows:

- with the bearing still warm from operation and rotating if safe to do so
- before the bearing comes to rest if safe to do so
- before extended breaks in operation

Relubrication should continue until a fresh collar of grease appears at the seal gaps. Old grease must be allowed to leave the bearing unhindered.

✎ *Grease reservoir*

The initial greasing quantity is between 30% and 100% of the available volume in the bearing, dependent on the bearing type and operating conditions.

A grease reservoir can extend the grease operating life. The grease in the reservoir must be in constant contact with the grease on the raceway. The grease operating life does not increase proportionally with the size of the grease reservoir.

The volume of the grease reservoir should correspond to the volume in the bearing between the inner and outer ring (not taking account of the cage and rolling elements) ➤*80*|*11* and ➤*80*|*12*.

Evaporation of the base oil should be prevented by design measures, for example by sealing shields ➤*80*|*11* and ➤*80*|*12*.

The grease operating life and relubrication interval are doubled when hybrid ball bearings are used.

11
Grease reservoir on one side

① *Sealing washer*
② *Grease reservoir*

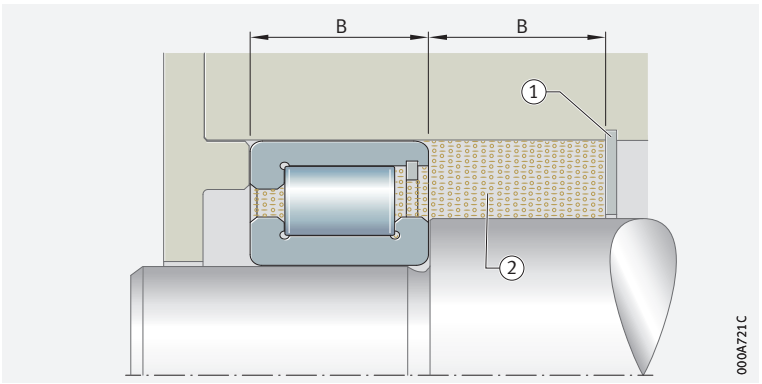

12
Grease reservoir on both sides

① *Sealing washer*
② *Grease reservoir*

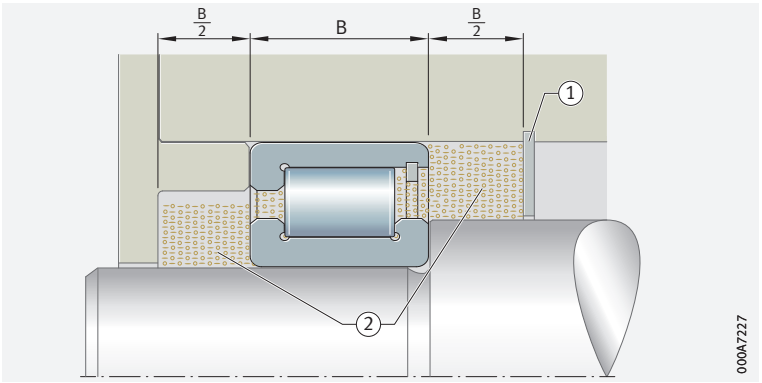

Miscibility

✎ *Preconditions*

Mixtures of greases should be avoided if at all possible.
If they are unavoidable, the following preconditions must be fulfilled:

- The base oil must be the same
- The thickener types must match
- The base oil viscosities must be similar (they must not differ by more than one ISO VG class)
- The consistency must be identical (NLGI class)

Miscibility of greases must always be agreed in consultation with the lubricant manufacturer.

Even when these preconditions are fulfilled, impairment of the performance capability of the mixed grease cannot be ruled out.

If a decision is taken to change to a different grease grade, the grease should be rinsed out if this is possible. Further relubrication should be carried out after a shortened period.

If incompatible greases are mixed, this can lead to considerable structural changes. Substantial softening of the grease mixture may also occur. Definite statements on miscibility can only be obtained by means of suitable tests.

Storage life

In general, the greases can be stored for 3 years.

Preconditions

The preconditions are:

- a closed room or store
- temperatures between 0 °C and +40 °C
- relative humidity no more than 65%
- no influence of chemical agents (vapours, gases, fluids)
- the rolling bearings are sealed

Lubricants age due to environmental influences. The information provided by lubricant manufacturers must always be observed.

After long periods of storage, the start-up frictional torque of greased bearings can be temporarily higher than normal. The lubricity of the grease may also have deteriorated.

Since the lubrication characteristics of greases vary and different raw materials may be used for greases of the same name, Schaeffler cannot offer any guarantees either for the lubricants used by customers for relubrication or for their characteristics.

6.3 Oil lubrication

Mineral oils or synthetic oils are suitable

For the lubrication of rolling bearings, mineral oils and synthetic oils are essentially suitable. Oils with a mineral oil base are used most frequently. They must, as a minimum, fulfil the requirements in accordance with DIN 51517 or DIN 51524.

Special oils, often synthetic oils, are used under extreme operating conditions or where there are special requirements relating to oil resistance. In these cases, please consult the lubricant manufacturers or Schaeffler.

Operating temperatures

The information provided by the lubricant manufacturer should be taken as authoritative.

Selection of suitable oil

The achievable bearing life and security against wear are higher with better separation of the contact surfaces by a lubricant film ➤81|13.

13
Lubricant film in the contact zones

h_{min} = *minimum lubricant film thickness*

① *Entry zone*
② *Pressure curve according to EHD theory*
③ *Exit zone*
④ *Lubricant*

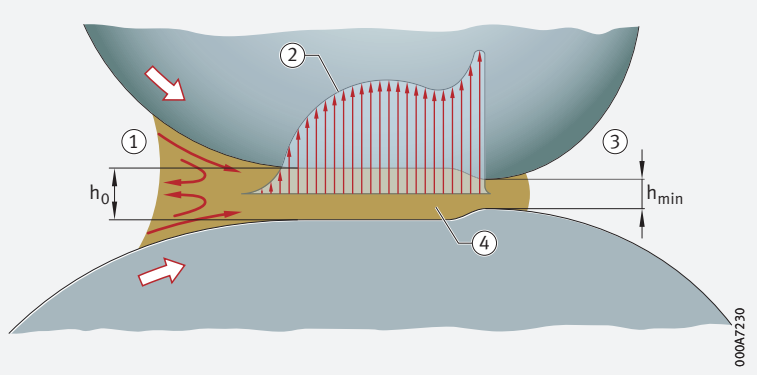

Reference viscosity for mineral oils

✎ *Guide value for ν_1*

The guide value for ν_1 is dependent on the mean bearing diameter d_M and the speed n. It takes account of the EHD theory of lubricant film formation and practical experience.

Depending on the operating speed, the oil at operating temperature must have at least the reference viscosity ν_1 ➤82 | 14 and ➤82 | 15.

14
Calculating the reference viscosity ν_1

ν_1 = *reference viscosity*
d_M = *mean bearing diameter*
n = *speed*

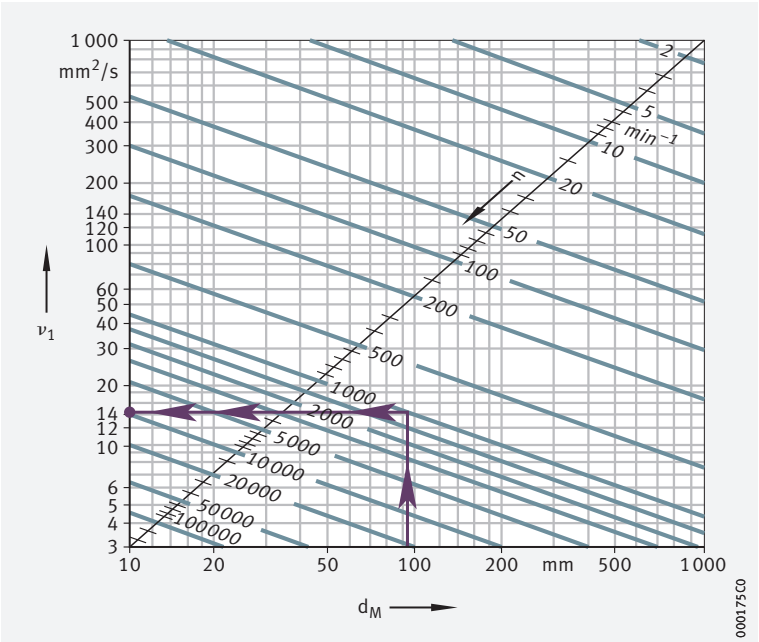

15
ν/ϑ diagram for mineral oils

ν = *operating viscosity*
ϑ = *operating temperature*
ν_{40} = *viscosity at +40 °C*

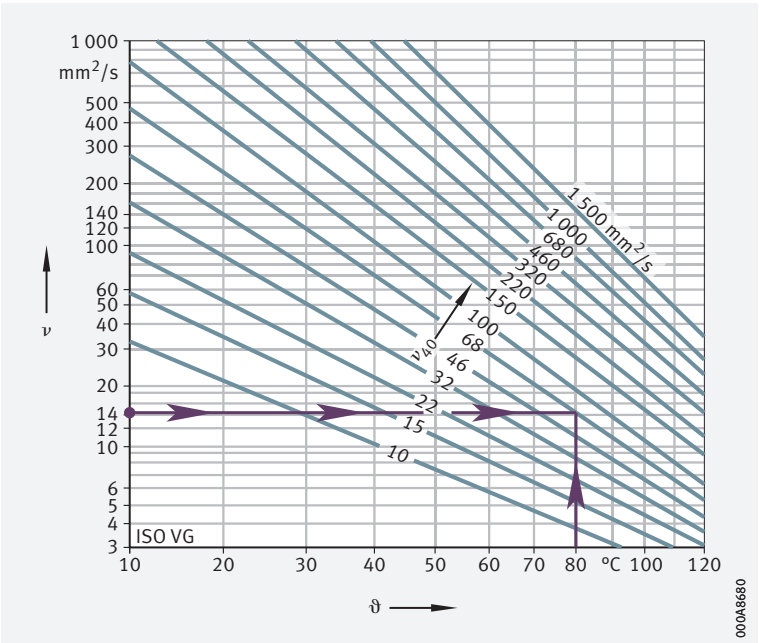

Calculation of reference viscosity

Determine ν_1

The reference viscosity ν_1 is calculated as follows:

- Allocate ν_1 to a nominal viscosity between ISO VG 10 and ISO VG 1500 (mid-point viscosity in accordance with ISO 3448)
- Round intermediate values to the nearest ISO VG (due to the steps between groups)

This method cannot be used for synthetic oils, since these have different V/P (viscosity/pressure) and V/T (viscosity/temperature) characteristics. In these cases, please consult Schaeffler.

Influence of temperature on viscosity

Aim for VI of 95

As the temperature increases, the viscosity of the oil decreases. This temperature-dependent change in the viscosity is described using the viscosity index VI. For mineral oils, the viscosity index should be at least 95.

When selecting the viscosity, the lower operating temperature must be taken into consideration, since the increasing viscosity will reduce the flowability of the lubricant. As a result, the level of power losses may increase.

Viscosity ratio κ

A very long life can be achieved with a viscosity ratio $\kappa = \nu/\nu_1 = 3$ to 4 (ν = operating viscosity). Highly viscous oils do not, however, bring only advantages. In addition to the power losses arising from lubricant friction, there may be problems with the feed and removal of oil at low or even at normal temperatures.

Aim for long fatigue life

The oil selected must be sufficiently viscous that it gives the highest possible fatigue life. It must also be ensured that the bearings are always supplied with adequate quantities of oil.

Pressure properties and anti-wear additives

Oils with wear additives

If the bearings are subjected to high loads or if the operating viscosity ν is less than the reference viscosity ν_1, oils with anti-wear additives (type P in accordance with DIN 51502) should be used. Such oils are also necessary for rolling bearings with a substantial proportion of sliding contact (for example, bearings with line contact). These additives form boundary layers to reduce the harmful effects of metallic contact occurring at various points (wear).

The suitability of these additives varies and is normally heavily dependent on temperature. Their effectiveness can only be assessed by means of testing in the rolling bearing (for example on our test rig FE8 to DIN 51819).

Silicone oils should only be used for low loads ($P \leqq 0{,}03 \cdot C$).

Compatibility

Check compatibility prior to use

Before an oil is used, its behaviour must be checked in relation to plastics, seal materials (elastomers) and light and non-ferrous metals. This must always be checked under dynamic loading and at operating temperature.

Synthetic oils must always be checked for their compatibility. The lubricant manufacturer must be consulted on this at the same time.

Miscibility

Avoid mixing different oils

The mixing of different oils should be avoided wherever possible. In particular, the presence of different additive packages may lead to undesirable interactions.

In general, oils with a mineral oil base and the same classification are miscible, for example type HLP with type HLP. The viscosities should vary by no more than one ISO VG class.

Synthetic oils must always be checked for their compatibility. The lubricant manufacturer must be consulted on this at the same time.

Miscibility must be checked in advance for each individual case.

Cleanliness

An oil filter should be used

The cleanliness of the oil has a considerable influence on the rating life of the bearings ➤*34*. Schaeffler therefore recommends that an oil filter should be provided; attention must be paid to the filtration rate. The filter mesh should be $< 25\ \mu m$.

Lubrication methods

Proven methods

The essential lubrication methods are:

- drip feed oil lubrication
- pneumatic oil lubrication (to protect the environment, this should be used as a substitute for oil mist lubrication)
- oil bath lubrication (immersion or sump lubrication)
- recirculating oil lubrication

Drip feed oil lubrication

This is suitable for bearings running at high speeds ➤*84*|*16*. The oil quantity required is dependent on the type and size of bearing, the operating speed and the load. The guide value is between 3 drops/min and 50 drops/min for each rolling element raceway (one drop weighs approx. 0,025 g).

Excess oil must be allowed to flow out of the bearing arrangement.

16
Drip feed oil lubrication

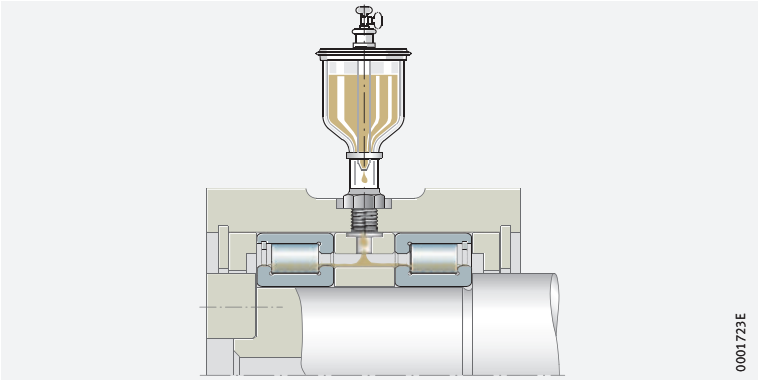

Pneumatic oil lubrication

This method is particularly suitable for radial bearings running at high speeds and under low loads ($n \cdot d_M = 800\,000$ to $3\,000\,000\ min^{-1} \cdot mm$) ➤*85*|*17*. Clean compressed air free from moisture feeds oil to the bearing. This generates an excess pressure, which prevents contaminants from entering the bearing.

With a pneumatic oil lubrication system designed for minimal quantity lubrication, low frictional torque and a low operating temperature can be achieved.

Parameters

Parameters for design of the lubrication system should be requested from the equipment manufacturers.

Pneumatic oil lubrication of axial bearings should be avoided if possible.

The oil quantity required for adequate supply is dependent on the bearing type.

Pneumatic oil lubrication has little cooling effect.

Follow the instructions provided by the manufacturers of the lubrication systems.

17
Pneumatic oil lubrication

① *To the pneumatic oil unit*

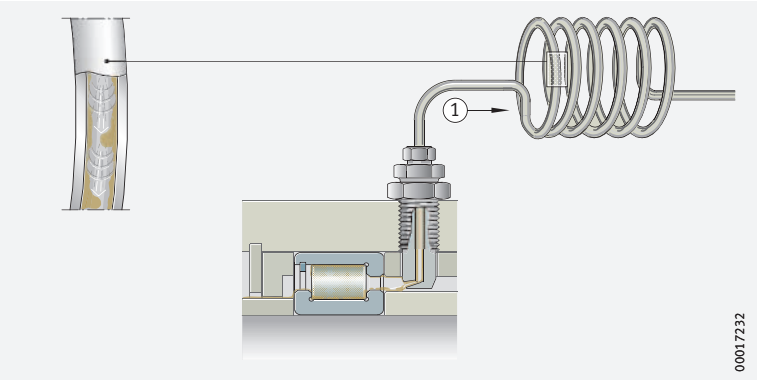

Oil bath lubrication

The oil level should reach the centre line of the lowest rolling element ➤*85*|*18*. If the oil level is higher than this, the bearing temperature may increase at high circumferential velocities (with losses due to splashing). Furthermore, foaming of the oil may occur.

$n \cdot d_M$ values

In general, it is suitable for speeds up to $n \cdot d_M = 300\,000\ min^{-1} \cdot mm$. At $n \cdot d_M < 150\,000\ min^{-1} \cdot mm$, the bearing may be completely immersed.

In bearings with an asymmetrical cross-section, oil return ducts must be provided due to the pumping effect so that recirculation can be achieved.

Axial bearings

In axial bearings, the oil level must cover the inside diameter of the axial cage.

Proportion oil quantity adequately

The oil quantity in the housing must be adequately proportioned, as otherwise very short oil change intervals will be necessary.

18
Oil bath lubrication

① *Oil sump*

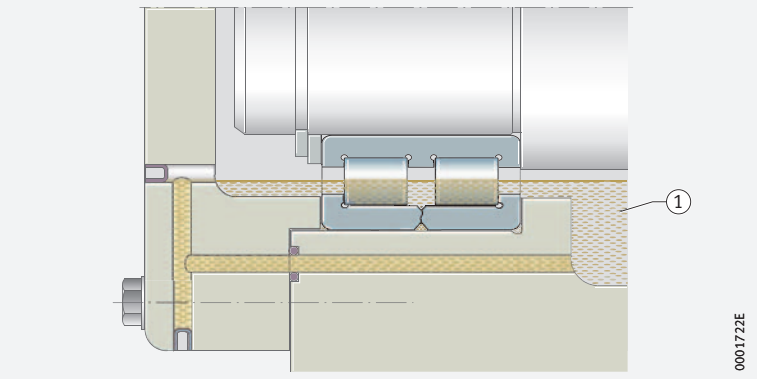

Recirculating oil lubrication

In recirculating oil lubrication, the oil is subjected to additional cooling ➤*85*|*19*. The oil can therefore dissipate heat from the bearing. The quantity of oil required for heat dissipation is dependent on the cooling conditions.

19
Recirculating oil lubrication

① *Filter*
② *Pump*
③ *Cooling system*

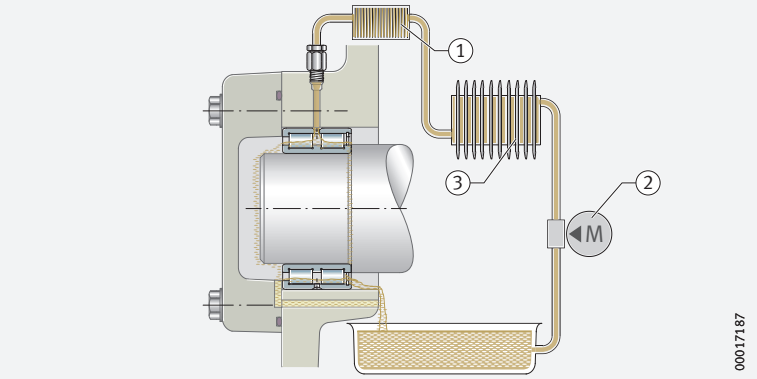

Oil quantity

The oil quantities are matched to the operating conditions ➤*86*|*20*. The diagram indicates oil quantities that can be fed through the bearing without pressure with a side feed arrangement and banking up to the lower edge of the shaft.

Bearings with asymmetrical cross-section

For bearings with an asymmetrical cross-section (such as angular contact ball bearings, tapered roller bearings, axial spherical roller bearings), larger throughput quantities are permissible due to the pumping effect than for bearings with a symmetrical cross-section. Large quantities can be used to dissipate wear debris or heat.

20
Oil quantities

$\dot{V}$ = *oil quantity*
D = *outside bearing diameter*
a = *oil quantity sufficient for lubrication*
b = *upper limit for bearings of symmetrical design*
c = *upper limit for bearings of asymmetrical design*
a_1; b_1; c_1: $D/d > 1{,}5$
a_2; b_2; c_2: $D/d \leqq 1{,}5$
① *Increasing oil quantity required for heat dissipation*
② *No heat dissipation required*

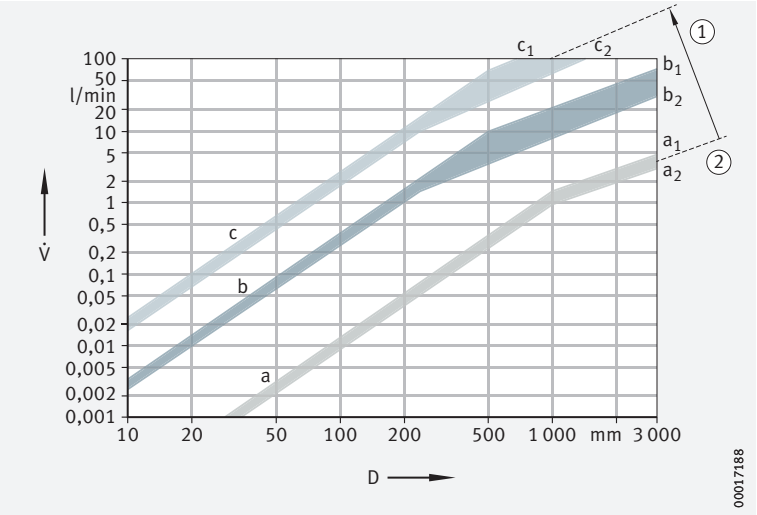

Design of adjacent construction for oil lubrication

The lubrication holes in the housing and shaft must align with those in the rolling bearings. Adequate cross-sections must be provided for annular slots, pockets, etc. The oil must be able to flow out without pressure (this prevents oil build-up and additional heating of the oil).

Axial bearings

In axial bearings, the oil must always be fed from the inside to the outside.

Guide values

The cross-section of the oil outlet hole should be significantly larger than that of the inlet ➤*86*|*21*.

The cross-section A_{rab} is dependent on the oil quantity and the viscosity ➤*86*|*3*.

3
Outlet cross section

$$A_{rab} = A_{ab} \cdot K_{ab}$$

Legend

A_{rab}	mm^2	Outlet cross-section taking account of viscosity
K_{ab}	–	Correction factor for viscosity ➤*87*|*5*
A_{ab}	mm^2	Outlet cross-section ➤*86*|*21*.

21
Outlet cross-section (guide values)

A_{ab} = *cross-section for pressure-free oil runout*
$\dot{V}$ = *oil quantity*

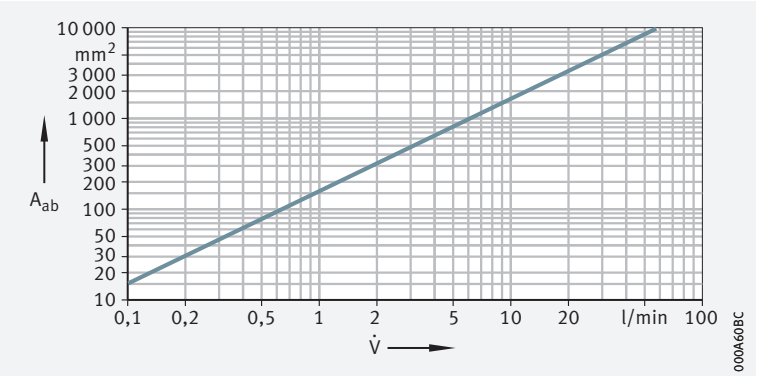

5 *Correction factor K_{ab}*

Viscosity ν mm^2/s		Factor K_{ab}	
from	to	from	to
–	30	1	–
30	60	1,2	1,6
60	90	1,8	2,2
90	120	2,4	2,8
120	150	3	3,4

Oil injection lubrication

Advantages and disadvantages

In bearings running at high speeds, the oil is injected into the gap between the cage and bearing ring ➤87| 22. Injection lubrication using large recirculation quantities is associated with high power loss.

Heating of the bearings can only be held within limits with a considerable amount of effort. The appropriate upper limit for the speed parameter $n \cdot d_M = 1\,000\,000\ min^{-1} \cdot mm$ for recirculating lubrication with suitable bearings (for example spindle bearings) can be exceeded to a considerable degree when using injection lubrication.

22 *Oil injection lubrication*

① *Angular contact ball bearing*
② *Tapered roller bearing*
③ *Oil outlet holes*

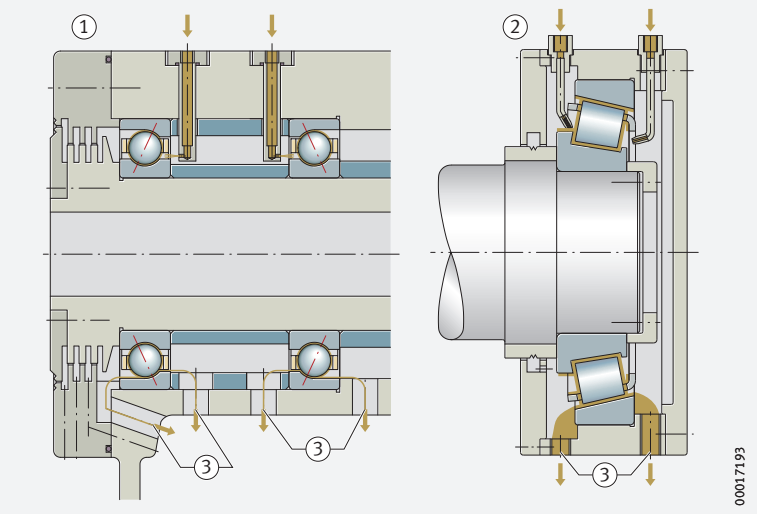

Heat dissipation by the lubricant

Values $\dot{Q}_L$ and $\dot{V}_L$ can be calculated

Oil can dissipate frictional heat from the bearing. It is possible to calculate the heat flow $\dot{Q}_L$ that is dissipated with the lubricant and the necessary lubricant volume flow $\dot{V}_L$.

Heat flow

The total dissipated heat flow due to possible heating by an external source can be calculated using ➤87| 4, while the heat flow dissipated by the lubricant can be calculated using ➤87| 5.

4 *Total dissipated heat flow*

$$\dot{Q} = 10^{-6} \cdot \frac{\pi}{30} \cdot n \cdot \left(M_0 + M_1\right) + \dot{Q}_E$$

5 *Heat flow dissipated by the lubricant*

$$\dot{Q}_L = \dot{Q} - \dot{Q}_S$$

Legend

$\dot{Q}$	kW	Total dissipated heat flow
n	min^{-1}	Operating speed or equivalent speed
M_0	Nmm	Frictional torque as a function of speed
M_1	Nmm	Frictional torque as a function of load
$\dot{Q}_E$	kW	Heat flow due to heating by external source
$\dot{Q}_L$	kW	Heat flow dissipated by the lubricant
$\dot{Q}_S$	kW	Heat flow dissipated via the bearing seating surfaces.

Lubricant volume flow

The lubricant volume flow can be calculated approximately ➤88| ƒ6.

ƒ6
Lubricant volume flow

$$\dot{V}_L = \frac{\dot{Q}_L}{0{,}0286 \cdot \Delta\vartheta_L}$$

Legend

$\dot{V}_L$	l/min	Lubricant volume flow
$\dot{Q}_L$	kW	Heat flow dissipated by the lubricant
$\Delta\vartheta_L$	K	Difference between oil inlet temperature and oil outlet temperature.

Guide values

If these values cannot be calculated, the guide values according to ➤88| 23 apply for the temperature difference of $\Delta\vartheta_L$ = 10 K.

23
Guide values for the oil quantity in cooling and lubrication

N_R = *frictional power*
$\dot{V}$ = *oil quantity*

① *No account is taken of thermal conduction, radiation or convection*
② *Empirical values for normal cooling conditions*
③ *Empirical values for very good cooling conditions*

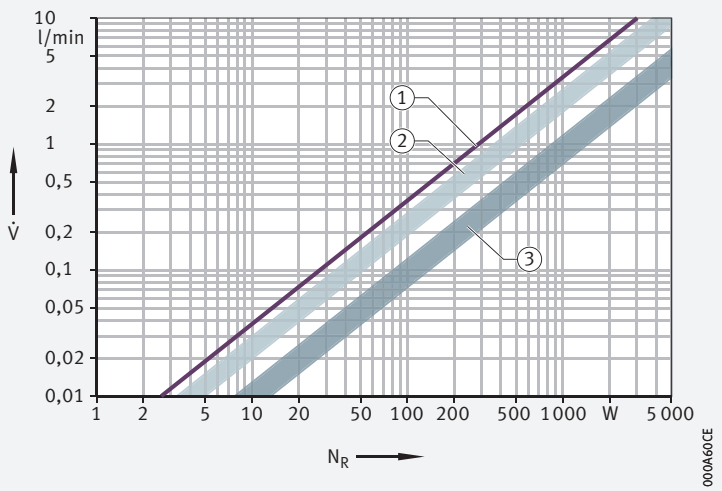

Oil changes

One oil change per year is usually sufficient

At temperatures in the bearing of less than +50 °C and with only slight contamination, an oil change once per year is generally sufficient. Guide values for oil change intervals are given in ➤88| 24. The precise oil change intervals should be agreed in consultation with the oil manufacturer.

Severe operating conditions

Under severe conditions, the oil should be changed more frequently. This applies, for example, in the case of higher temperatures and low oil quantities with a high circulation index. The circulation index indicates how often the entire oil volume available is recirculated or pumped per hour ➤88| ƒ7.

ƒ7
Circulation index

$$\text{Circulation index} = \frac{\text{Pump displacement m}^3/\text{h}}{\text{Container volume m}^3}$$

24
Oil change intervals

ϑ = *oil sump temperature*
t = *oil change interval*

① *Synthetic gearbox oils*
② *Mineral gearbox oils*

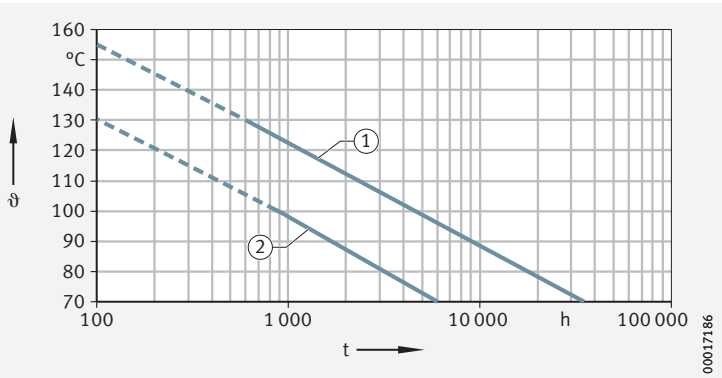



6.4 Lubricating grease groups

6 Greases

$\vartheta_{reference}$ = *reference temperature*

K_T = *temperature factor* ➤77| 8

Desig-nation[4]	Classification	Type of grease
GA08	Grease for line contact	Lithium complex soap Mineral oil
GA11	Rolling bearing grease resistant to media for temperatures up to +250 °C	PTFE Alkoxyfluoroether
GA13	Standard ball bearing and insert bearing grease for D > 62 mm	Lithium soap Mineral oil
GA14	Low-noise ball bearing grease for D ≦62 mm	Lithium soap Mineral oil
GA15	Low-noise ball bearing grease for high speeds	Lithium soap Ester oil/SHC
GA16	Low-noise ball bearing grease for temperatures up to +160 °C	Polycarbamide Mineral oil/SHC
GA17	Ball and radial insert ball bearing grease for wide temperature range	Polycarbamide Ester oil
GA22	Free-running grease with low frictional torque	Lithium soap Ester oil, mineral oil
GA26	Standard grease for drawn cup roller clutches	Calcium/lithium soap Mineral oil
GA28	Screw drive bearing grease	Lithium soap Synthetic oil/mineral oil
GA47	Rolling bearing grease resistant to media for temperatures up to +140 °C	Barium complex soap Mineral oil

1) *The reference temperature $\vartheta_{reference}$ should not be exceeded in order to avoid a temperature-induced reduction in the grease operating life.*

2) *At the reference temperature, the temperature factor $K_T = 1$*

3) *Dependent on bearing type.*

4) ***GA..** Stands for **G**rease **A**pplication Group.., based on Grease Spec 00.*

Operating temperature range °C		$\vartheta_{reference}$ [1] °C	K_T [2] Curve	NLGI class		Speed parameter $n \cdot d_M$ $min^{-1} \cdot mm$	ISO-VG class (base oil) [3]		Designation [4]	Recommended Arcanol grease for relubrication
from	to			from	to		from	to		
–20	+140	+105	②	2	3	500 000	150	320	**GA08**	**LOAD150**
–30	+260	+200	③	2	–	300 000	460	680	**GA11**	**TEMP200**
–20	+120	+75	③	3	–	500 000	68	150	**GA13**	**MULTI3**
–20	+120	+75	③	2	–	500 000	68	150	**GA14**	**MULTI2**
–40	+120	+80	②	2	3	1 000 000	22	32	**GA15**	–
–30	+160	+110	②	2	3	500 000	100	150	**GA16**	**TEMP90**
–40	+180	+120	②	2	–	700 000	68	220	**GA17**	–
–50	+120	+65	③	2	–	1 500 000	10	22	**GA22**	–
–20	+80	–	–	2	–	500 000	10	22	**GA26**	–
–30	+140	+105	②	2	–	800 000	15	100	**GA28**	**MULTITOP**
–20	+130	+70	②	1	2	350 000	150	320	**GA47**	–

6.5 Arcanol rolling bearing greases

7 *Arcanol rolling bearing greases*

+++ = *extremely suitable*
++ = *highly suitable*
\+ = *suitable*
– = *less suitable*
–– = *not suitable*

$\vartheta_{reference}$ = *reference temperature*
K_T = *temperature factor* ➤77|8

Available containers ➤96|8

	Grease	Characteristic applications	Operating temperature °C		$\vartheta_{reference}$ °C	K_T Curve
			from	to		
Multi-purpose greases	MULTITOP	Ball and roller bearings in: ■ Rolling mills ■ Construction machinery ■ Spinning and grinding spindles ■ Automotive engineering	–50[1]	+140	+105	②
	MULTI2	Ball bearings up to D ≦ 62 mm in: ■ Electric motors ■ Agricultural and construction machinery ■ Household appliances	–30	+120	+75	③
	MULTI3	Ball bearings from D > 62 mm in: ■ Electric motors ■ Agricultural and construction machinery ■ Fans	–30	+120	+90	②
High loads	LOAD150	■ Ball, roller and needle roller bearings ■ Linear guidance systems in machine tools	–20	+140	+105	②
	LOAD220	Ball and roller bearings in: ■ Rolling mill plant ■ Paper machinery ■ Rail vehicles	–20	+140	+80	③
	LOAD400	Ball and roller bearings in: ■ Mining machinery ■ Construction machinery ■ Wind turbine main bearings	–40[1]	+130	+80	③
	LOAD460	Ball and roller bearings in: ■ Wind turbines ■ Bearings with pin cage	–40[1]	+130	+80	③
	LOAD1000	Ball and roller bearings in: ■ Mining machinery ■ Construction machinery ■ Cement plant	–30[1]	+130	+90	②

1) *Measurement values according to Schaeffler FE8 low temperature test.*

Thickener	Base oil	Consistency NLGI	Base oil viscosity at +40 °C mm²/s	Temperatures		Low friction, high speed	High load, low speed	Vibrations	Support for seals	Relubrication facility
				Low	High					
Lithium soap	Partially synthetic oil	2	82	+++	++	++	+++	++	+	+++
Lithium soap	Mineral oil	2	110	++	+	+	+	+	+	+++
Lithium soap	Mineral oil	3	80	++	+	+	+	++	++	++
Lithium complex soap	Mineral oil	2	160	+	++	–	+++	++	++	++
Lithium/ calcium soap	Mineral oil	2	245	+	+	–	+++	++	++	++
Lithium/ calcium soap	Mineral oil	2	400	+	+	–	+++	++	++	++
Lithium/ calcium soap	Mineral oil	1	400	++	+	–	+++	++	–	++
Lithium/ calcium soap	Mineral oil	2	1 000	+	+	––	+++	++	++	++

continued ▼

7
Arcanol rolling bearing greases

+++ = *extremely suitable*
++ = *highly suitable*
\+ = *suitable*
– = *less suitable*
–– = *not suitable*

$\vartheta_{reference}$ = *reference temperature*
K_T = *temperature factor* ➤77|8

Available containers ➤96|8

	Grease	Characteristic applications	Operating temperature °C		$\vartheta_{reference}$ °C	K_T Curve
			from	to		
High temperatures	TEMP90	Ball and roller bearings in: ■ Couplings ■ Electric motors ■ Automotive engineering	–40	+160	+110	②
	TEMP110	Ball and roller bearings in: ■ Electric motors ■ Automotive engineering	–35	+160	+110	③
	TEMP120	Ball and roller bearings in: ■ Continuous casting plant ■ Paper machinery	–30	+180	+120	③
	TEMP200	Ball and roller bearings in: ■ Guide rollers for baking machinery ■ Kiln trucks and chemical plant ■ Piston pins in compressors	–30	+260	+200	③
Special requirements	SPEED2,6	■ Ball bearings in machine tools ■ Spindle bearings ■ Rotary table bearings ■ Instrument bearings	–40	+120	+80	②
	VIB3	Ball and roller bearings in: ■ Rotors for wind turbines (blade adjustment) ■ Packaging machinery ■ Rail vehicles	–30	+150	+90	③
	FOOD2	Ball and roller bearings in: ■ Applications with food contact (NSF-H1 registration, kosher and halal certification)	–30	+120	+70	③
	CLEAN-M	■ Ball, roller and needle roller bearings as well as linear guidance systems in clean room applications	–30	+180	+90	③
	MOTION2	■ Ball and roller bearings in oscillating operation ■ Slewing rings in wind turbines	–40	+130	+100	②
	SEMIFLUID	■ Flowable grease for linear guidance systems, gear teeth and gearboxes	–40	+160	–	–

Thickener	Base oil	Consistency NLGI	Base oil viscosity at +40 °C mm²/s	Temperatures		Low friction, high speed	High load, low speed	Vibrations	Support for seals	Relubrication facility
				Low	High					
Polycarbamide	Partially synthetic oil	3	148	+++	++	+	+	+	++	++
Lithium complex soap	Partially synthetic oil	2	130	+++	+++	++	+	+	+	+
Polycarbamide	Alkoxyfluoro oil	2	400	++	+++	–	+++	+	++	+
PTFE	Fluoridated polyether oil	2	550	++	+++	––	++	+	+	+
Lithium complex soap	Synthetic oil	2 – 3	25	+++	+	+++	––	–	+	+
Lithium complex soap	Mineral oil	3	170	++	++	–	++	+++	++	–
Aluminium complex soap	Synthetic oil	2	150	++	–	+	+	+	+	+++
Polycarbamide	Ester	2	103	+++	+++	+	+	+	+	++
Lithium soap	Synthetic oil	2	50	+++	+	–	++	+++	++	+
Lithium complex soap	Synthetic oil	00	170	++	+	–	+	–	––	++

continued ▲

Available containers

8 *Grease container sizes*

Arcanol grease[1)]	Tube		Cartridge	Can	Bucket		Hobbock		Drum
	70 g	250 g	400 g	1 kg	5 kg	12,5 kg	25 kg	50 kg	180 kg
MULTITOP	–	●	●	●	●	●	●	–	●
MULTI2	–	●	●	●	●	●	●	–	●
MULTI3	–	●	●	●	●	●	–	–	●
LOAD150	–	–	●	●	–	●	–	●	–
LOAD220	–	–	●	●	–	●	●	–	●
LOAD400	–	–	●	●	●	●	●	●	●
LOAD460	–	–	●	●	●	●	–	●	●
LOAD1000	–	–	–	–	●	–	●	●	●
TEMP90	–	–	●	●	●	–	●	–	●
TEMP110	–	–	●	●	–	–	–	●	–
TEMP120	–	–	●	●	●	–	●	–	–
TEMP200	●	–	–	●	–	–	–	–	–
SPEED2,6	–	●	●	●	–	–	●	–	–
VIB3	–	–	●	●	●	–	●	●	–
FOOD2	–	–	●	●	–	●	●	–	–
CLEAN-M	–	●	●	●	–	–	–	–	–
MOTION2	–	●	●	●	●	●	●	●	–
SEMIFLUID	–	–	●	–	–	–	–	–	–

1) *Other containers are available by agreement.*

Grease App from Schaeffler

Schaeffler Based on its expertise in rolling bearings and tribology, Schaeffler offers a digital assistant for determining lubrication parameters.

Schaeffler customers can use the Grease App to calculate specific values for the grease lubrication of rolling bearings:

- initial grease quantity for the rolling bearing
- relubrication intervals
- relubrication quantities
- recommendation of suitable Arcanol lubricants and their properties

The calculation takes different cage designs and cage geometries into account and determines the free volume in the rolling bearing. This allows the relevant lubrication parameters to be precisely determined.

https://greaseapp.com/

7 Bearing data

7.1 Main dimensions

The main dimensions are the key dimensions of a rolling bearing. They include ➤97| 1:

- the bore diameter (d)
- the outside diameter (D)
- the width or height (B, C, T or H)
- the chamfer dimensions (r)

1 *Main dimensions*

① *Deep groove ball bearing (radial bearing)*
② *Axial deep groove ball bearing (axial bearing)*

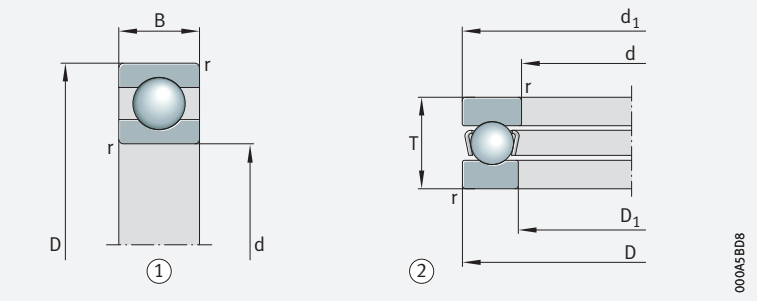

Standardised and non-standardised dimensions

External dimensions are standardised

The dimensions which determine the installation space are standardised. Standardisation is not, however, applied to the internal dimensions, such as the size and quantity of the rolling elements for example. The main dimensions of metric rolling bearings are defined in the following ISO dimension plans:

- ISO 15:2017 for radial rolling bearings, excluding single row needle roller bearings, insert bearings and tapered roller bearings
- ISO 355:2007 for tapered roller bearings
- ISO 104:2015 for axial bearings

DIN 616 describes dimension plans for radial and axial bearings. An overview of ISO and DIN rolling bearing standards is given in DIN 611:2010-05.

ISO dimension plans

Standard dimensions

Experience has shown that the predominant proportion of all bearing arrangement tasks can be fulfilled using bearings with standard dimensions, which are contained in ISO dimension plans.

Advantages of dimension plans

The dimension plans are valid for different bearing types. Standard rolling bearings of different types can thus be manufactured to the same external dimensions. As a result, a designer working on the same design envelope can make a selection between bearings of several types with the same external dimensions.

Several outside diameters/ width dimensions are assigned to one bearing bore

In the dimension plans, one bearing bore is allocated several outside diameters and width dimensions ➤102| 10. In this way, it is possible to design several bearings of the same type that, for the same bore, exhibit different load carrying capacities. The development of new bearing series and individual new rolling bearings in accordance with the dimension plans has considerable advantages for users and manufacturers.

Width and diameter series

Bearing series are described using numbers

Width and diameter series are described using numbers. In the case of radial bearings in accordance with DIN 616 and ISO 15, these are as follows:

- for width series, the numbers 8, 9, 0, 1, 2, 3, 4, 5, 6, 7 ➤*98*|*2*
- for the identification of diameter series, the numbers 7, 8, 9, 0, 1, 2, 3, 4, 5 ➤*98*|*3*

2
Identification of width series

For radial bearings to DIN 616 and ISO 15

① *Width series*

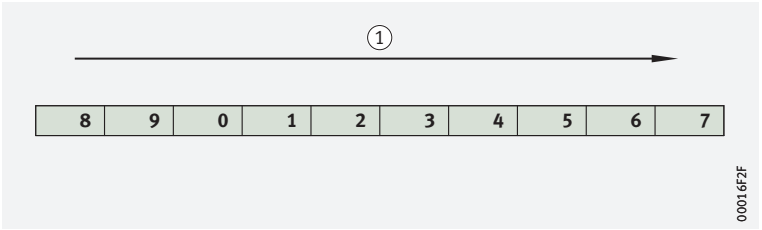

3
Identification of diameter series

For radial bearings to DIN 616 and ISO 15

① *Diameter series*

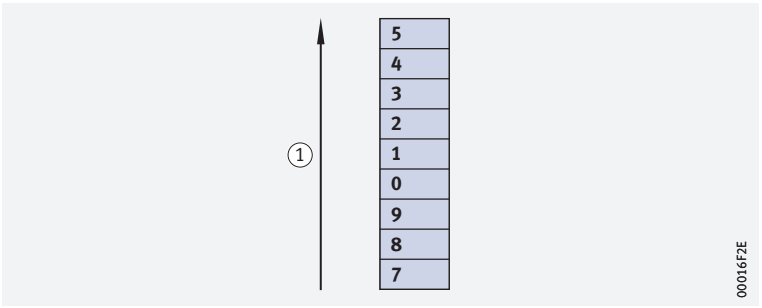

Dimension series

The dimension series is created from the width series and the diameter series

The specific number of the width and diameter series, when combined, identifies the dimension series ➤*98*|*1*. When this table is used, for example, for a radial bearing of the width series 2 and the diameter series 3, this gives the dimension series 23 ➤*98*|*1* and ➤*99*|*4*. If the bearing bore code is then added, ➤*103*|*7.3*, the bearing size is completely defined.

1
Dimension series for radial bearings (excluding tapered roller and needle roller bearings)

Width series – increase in cross-sectional width											
		8	**9**	**0**	**1**	**2**	**3**	**4**	**5**	**6**	**7**
Diameter series – increase in cross-sectional height	**5**	–	–	–	–	–	–	–	–	–	–
	4	–	–	04	–	24	–	–	–	–	–
	3	83	–	03	12	23	33	–	–	–	–
	2	82	–	02	12	22	32	42	52	62	–
	1	–	–	01	11	21	31	41	51	61	–
	0	–	–	00	10	20	30	40	50	60	–
	9	–	–	09	19	29	39	49	59	69	–
	8	–	–	08	18	28	38	48	58	68	–
	7	–	–	–	17	27	37	47	–	–	–

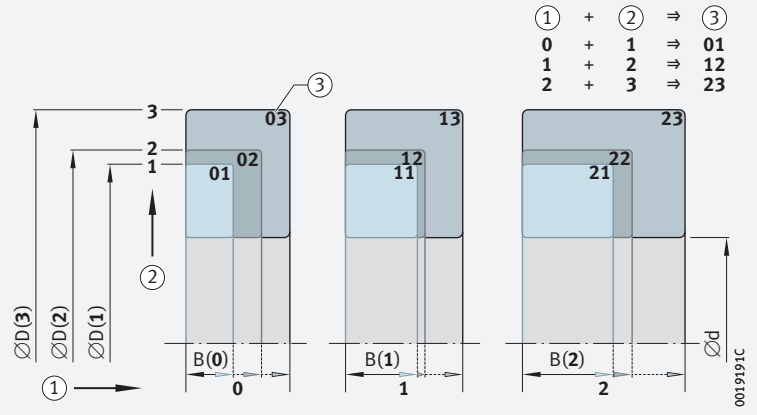

4 Generation of the dimension series

① Width series
② Diameter series
③ Dimension series

Dimension plan for metric tapered roller bearings to ISO 355

Tapered roller bearings can generally also be classified in the dimension plans to ISO 355 ➤*99*|*5*. The dimension series are designated in these by a combination of three symbols, e.g. 3FE ➤*99*|*5*.

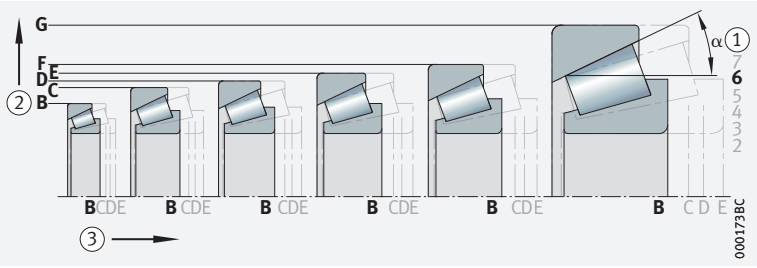

5 Dimension plan for tapered roller bearings (excerpt) to ISO 355

① Contact angle series (range of contact angles)
② Diameter series
③ Width series

7.2 Designation system

✎ *Clear designation*

Each rolling bearing has a designation that clearly indicates the type, dimensions, tolerances and internal clearance, if necessary with other important features.

✎ *Interchangeability*

Bearings that have the same standardised designation are interchangeable with each other. In the case of separable bearings, it cannot always be ensured that individual parts with the same origin can be interchanged with each other.

In Germany, the bearing designations are standardised in DIN 623-1. These designations are also used in many other countries.

Designation

✎ *The designation is a code comprising numbers and letters*

The designation for the bearing series comprises numbers and letters or letters and numbers. It indicates the type of bearing, the diameter series and, in many cases, the width series too ➤*100*|*6*, ➤*100*|*7* and ➤*102*|*10*. The diameter and width series are described in ➤*97*|*7.1*.

Basic designation, prefix and suffix

✎ *Basic designation*

The basic designation contains the symbols for the bearing series and the bearing bore ➤*100*|*6*, ➤*100*|*7* and ➤*102*|*10*.

✎ *Prefix*

The prefix normally identifies individual bearing parts of complete bearings (in certain cases, this may also be part of the basic designation) ➤*100*|*6* and ➤*100*|*7*.

✎ *Suffix*

The suffix defines special designs and features ➤*100*|*6* and ➤*100*|*7*. The prefix and suffix describe other features of the bearing but are not standardised in all cases and may vary in use depending on the manufacturer.

Designations – examples

Examples of the composition of designations on the basis of their definition in accordance with ➤*100*|*6* are shown on ➤*100*|*7*.

6
Composition of designations

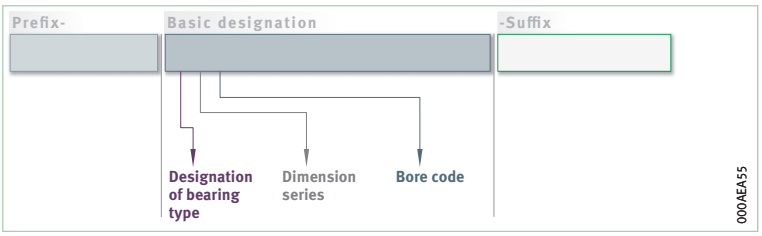

7
Examples of bearing designations, constructed in accordance with ➤6

① *Spherical roller bearing*
② *Deep groove ball bearing*
③ *Axial cylindrical roller bearing*

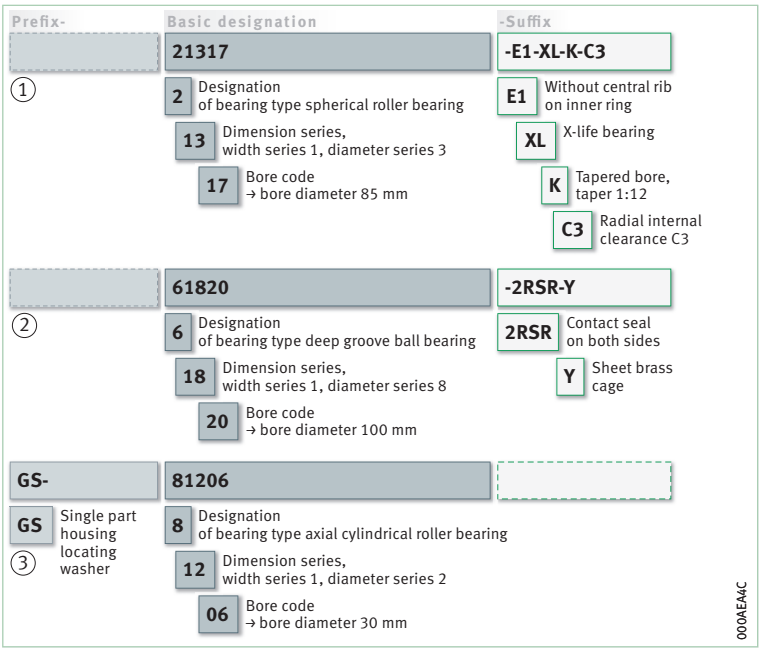

Designations of metric tapered roller bearings according to ISO 355 and ISO 10317

Structure of bearing designation for metric tapered roller bearings

➤*101*|*8* describes as an example the structure of the designation for a metric tapered roller bearing (dimension series to ISO 355, designation to ISO 10317). The 3 indicates the contact angle range. The first letter (F in this case) indicates a diameter series. Each diameter series has a certain ratio D/d (outside diameter to bore diameter). The second letter (E in this case) indicates a width series. Each width series has a certain ratio of bearing width T to the height of the bearing cross-section. The addition of the letter T (for tapered roller bearing) at the start and a three-digit number at the end for the bearing bore diameter in mm (in this case 120) gives the complete designation of a tapered roller bearing (e.g. T3FE 120 ➤*101*|*8*).

DIN ISO

DIN 720 Appendix 1 gives an interchange table for DIN and ISO designations.

8 Composition of designation for metric tapered roller bearings to ISO 10317

Dimension series to ISO 355, designation to ISO 10317

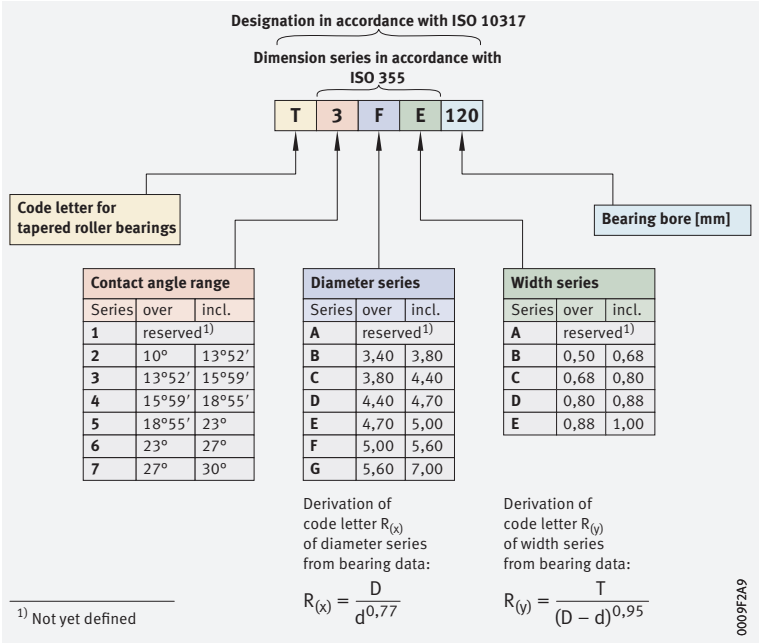

9 Example designation for metric tapered roller bearings to DIN 720

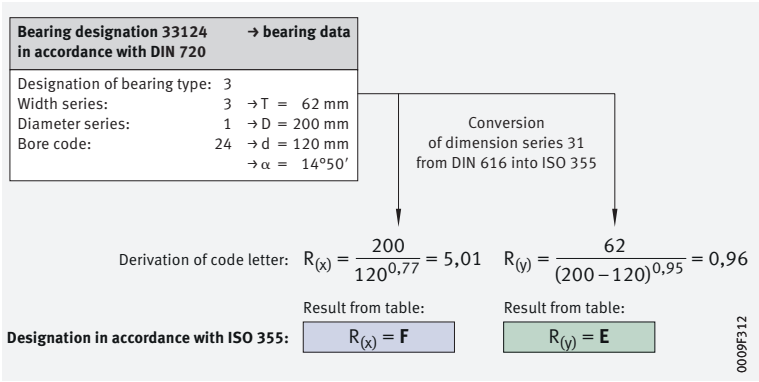

10 Bearing designations in accordance with DIN 623-1:1993 – basic designation structure

The bore code is derived from the diameter d of the bearing bore: with a factor of 5 or the addition of an oblique

d ≦ 9 mm — /+d = bore code

Bore code	/0,6	1	/1,5	2	/2,5	3	4	5	6	7	8	9
Bearing bore d	0,6	1	1,5	2	2,5	3	4	5	6	7	8	9

10 mm ≦ d ≦ 32 mm — d calculated by different means

Bore code	00	01	02	03	04	/22	05	/28	06	/32		
Bearing bore d	10	12	15	17	20	22	25	28	30	32		

35 mm ≦ d < 500 mm — d = 5 · bore code

Bore code	07	08	09	10	11	12	...	80	84	88	92	96
Bearing bore d	35	40	45	50	55	60	...	400	420	440	460	480

d ≧ 500 mm — /+d = bore code

Bore code	/500	/530	/560	/600	/630	/670	/710	/750	/800	/850	/900	...
Bearing bore d	500	530	560	600	630	670	710	750	800	850	900	...

Basic designation

Bearing series
Bore code

2 1 2 | 0 5

Dimension series

Diameter series
Series of various outside diameters D, which are assigned to each bore diameter d

5 4 3

Width series
For radial bearings: series of various bearing widths B, which are assigned to each bearing bore diameter d and each diameter series

8 9 0 1 2 2 3 4 5 6 7

Height series
For axial bearings: series of various bearing heights H, which are assigned to each bearing bore diameter d and each diameter series

1 0 9 8 7

Bearing type

0	1	2	3	4	5	6	7	8	N	NN	QJ
					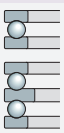						
									NU NJ NUP	NNC NNCL NNF NNU	

Bearing series

0	1	2	3	4	5	6	7	8	N	NN	QJ
(0)38	1(0)0	238	329	4(2)2	511	6(0)8	718	893	..19	..48	QJ10
(0)30	1(0)2	248	320	4(2)3	512	618	7(1)0	894	..10	..49	QJ(0)2
(0)32	112	239	330		513	6(0)9	7(0)2	811	..(0)2	..30	QJ(0)3
(0)33	(1)22	249	331		514	619	7(0)3	812	..22	..41	
	1(0)3	230	302		532	16(0)0	7(0)4		..(0)3		
	(1)23	240	322		533	6(1)0			..23		
		231	332			6(0)2			..(0)4		
		241	303		522	622					
		222	313		523	6(0)3					
		232	323		542	623					
		213			543	6(0)4					
		223									
		202									
		203									
		292									
		293									
		294									
Double row angular contact ball bearing	Self-aligning ball bearing	Spherical roller bearing, barrel roller bearing, axial spherical roller bearing	Tapered roller bearing	Double row deep groove ball bearing	Axial deep groove ball bearing	Single row deep groove ball bearing	Single row angular contact ball bearing	Axial cylindrical roller bearing	Single row cylindrical roller bearing	Double row cylindrical roller bearing	Four point contact bearing
0	1	2	3	4	5	6	7	8	N	NN	QJ

000E9B98

7.3 Determining the bearing bore

✎ For d < 10 mm, the bore diameter is stated in the basic designation

For certain bearing types, the bearing bores are stated directly or in an encoded form in accordance with DIN 623-1. Up to d < 10 mm, the bearing bore diameter is specified in the dimension-specific part of the designation (basic designation) directly as a number indicating the diameter ➤ *102* | *10*.

✎ Example

Deep groove ball bearing 623, bore diameter = 3 mm.

Bore code

✎ The bore code describes the bearing bore from d ≧ 10 mm

For nominal dimensions d ≧ 10 mm to d < 500 mm, the diameter is described by means of a bore code ➤ *102* | *10*.

For bores from 10 mm to 17 mm, the following applies:

d = 10 mm, bore code 00
d = 12 mm, bore code 01
d = 15 mm, bore code 02
d = 17 mm, bore code 03.

For all rolling bearings in the range from d = 20 mm to d = 480 mm (excluding double direction axial bearings), the bore code is formed by dividing the dimension of the bearing bore by 5.

✎ Example

Bearing bore d = 360 mm divided by 5 (360 : 5), bore code = 72.

✎ From d > 480 mm

From d > 480 mm, the unencoded bore diameter is given with an oblique after the bearing series, e.g. 618/500 with bore diameter d = 500 mm.

✎ Intermediate sizes

The intermediate sizes, such as bore diameter d = 22, 28 and d = 32 mm for example, are also given with an oblique as /22, /28 and /32.

✎ Magneto bearings

In the case of magneto bearings, the unencoded nominal bore dimension is given.

7.4 Radial internal clearance

✎ The radial internal clearance is determined on the dismounted bearing

The radial internal clearance applies to bearings with an inner ring and is determined on the unmounted bearing. It is defined as the amount by which the inner ring can be moved in a radial direction from one extreme position to the other in relation to the outer ring ➤ *103* | *11*.

The radial internal clearance groups are defined in DIN 620-4 and ISO 5753-1 and are described in DIN 620-4 by means of codes that comprise the capital letter C and a number. ISO 5753-1 designates the groups by the word "Group" and a number ➤ *103* | *11* and ➤ *104* | *2*.

11
Internal clearance groups

C2, CN, C3, C4, C5 = *radial internal clearance groups according to DIN 620-4*

Group 2, N, 3, 4, 5 = *radial internal clearance groups according to ISO 5753-1*

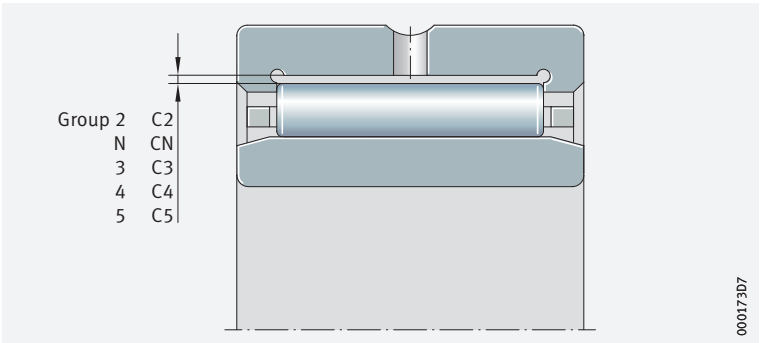

2 *Radial internal clearance groups*

Internal clearance group		Description	Application
DIN 620-4	ISO 5753-1		
C2	Group 2	Internal clearance < CN	For heavy alternating loads combined with swivel motion
CN	Group N	Normal internal clearance, CN is not included in bearing designations	For normal operating conditions with shaft and housing tolerances
C3	Group 3	Internal clearance > CN	For bearing rings with press fits and large temperature differential between the inner and outer ring
C4	Group 4	Internal clearance > C3	
C5	Group 5	Internal clearance > C4	

Enveloping circle

For bearings without an inner ring, the enveloping circle F_w is used. This is the inner inscribed circle of the rolling elements in clearance-free contact with the outer raceway ➤ *104* | *12*.

12 *Enveloping circle*

F_w = *enveloping circle diameter*

① *Rolling element*
② *Outer raceway*

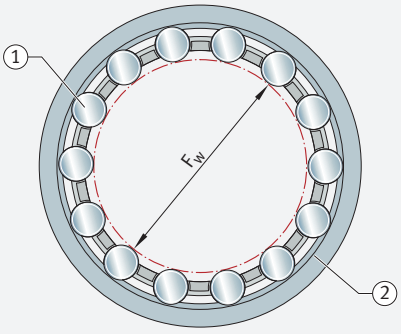

7.5 Operating clearance

The operating clearance is determined on a bearing still warm from operation

The operating clearance is determined on a mounted bearing still warm from operation. It is defined as the amount by which the shaft can be moved in a radial direction from one extreme position to the other.

The operating clearance is derived from the radial internal clearance and the change in the radial internal clearance as a result of interference fit and thermal influences in the mounted condition.

A normal operating clearance is usually achieved with internal bearing clearance CN

The operating clearance value is dependent on the operating and installation conditions of the bearing. A larger operating clearance is, for example, necessary if heat is transferred via the shaft, the shaft undergoes deflection or if misalignment occurs. An operating clearance smaller than CN should only be used in special cases, for example in high precision bearing arrangements. Normal operating clearance is achieved with an internal clearance of CN or, for larger bearings, more usually C3 if the recommended shaft and housing tolerances are maintained.

Calculation of operating clearance

The operating clearance is determined in accordance with ➤ *104* | *f* 1.

f 1 *Operating clearance*

$$s = s_r - \Delta s_P - \Delta s_T$$

Legend

s	µm	Radial operating clearance of mounted bearing warm from operation
s_r	µm	Radial internal clearance
Δs_P	µm	Reduction in radial internal clearance due to fit
Δs_T	µm	Reduction in radial internal clearance due to temperature.

Reduction in radial internal clearance due to fit

The radial internal clearance is reduced due to the fit as a result of expansion of the inner ring and contraction of the outer ring ➤105| 2.

2
Reduction in radial internal clearance

$$\Delta s_P = \Delta d + \Delta D$$

Legend

Δs_P	µm	Reduction in radial internal clearance due to fit
Δd	µm	Expansion of the inner ring
ΔD	µm	Contraction of the outer ring.

The expansion of the inner ring is calculated in accordance with ➤105| 3.

3
Expansion of the inner ring

$$\Delta d \approx 0{,}9 \cdot U \cdot d/F \approx 0{,}8 \cdot U$$

Legend

d	mm	Bore diameter of the inner ring
U	µm	Theoretical interference of the fitted parts with firm seating. The theoretical oversize of the fitted parts with a firm seating is determined from the mean deviations and the upper and lower deviations of the tolerance zones of the fitted parts reduced by $^1/_3$ of their acceptable value. The amount of surface smoothing during assembly must be subtracted from this.
F	mm	Raceway diameter of the inner ring.

! For very thin-walled housings and light metal housings, the reduction in the radial internal clearance must be determined by mounting trials.

The contraction of the outer ring is calculated in accordance with ➤105| 4.

4
Contraction of the outer ring

$$\Delta D \approx 0{,}8 \cdot U \cdot E/D \approx 0{,}7 \cdot U$$

Legend

ΔD	µm	Contraction of the outer ring
E	mm	Raceway diameter of the outer ring
D	mm	Outside diameter of the outer ring.

Reduction in radial internal clearance due to temperature

The radial internal clearance can alter considerably if there is a substantial temperature differential between the inner and outer ring ➤105| 5.

5
Reduction in radial internal clearance due to temperature

$$\Delta s_T = \alpha \cdot d_M \cdot 1\,000 \cdot \left(\vartheta_{IR} - \vartheta_{AR}\right)$$

Legend

Δs_T	µm	Reduction in radial internal clearance due to temperature
α	K^{-1}	Coefficient of thermal expansion of steel: $\alpha = 0{,}000011\ K^{-1}$
d_M	mm	Mean bearing diameter (d + D)/2
ϑ_{IR}	°C, K	Temperature of the inner ring
ϑ_{AR}	°C, K	Temperature of the outer ring (usual temperature difference between inner and outer ring: 5 K to 10 K).

! A larger radial internal clearance should be used for shafts running at high speeds, since adequate thermal compensation between the bearing, shaft and housing does not occur in this situation. Δs_T can, in this case, be significantly higher in this case than for continuous operation.

7.6 Axial internal clearance

The axial internal clearance s_a is defined as the amount by which one bearing ring can be moved relative to the other, without load, along the bearing axis ➤*106*|*13*.

13
Axial internal clearance in comparison with radial internal clearance

s_a = *axial internal clearance*
s_r = *radial internal clearance*

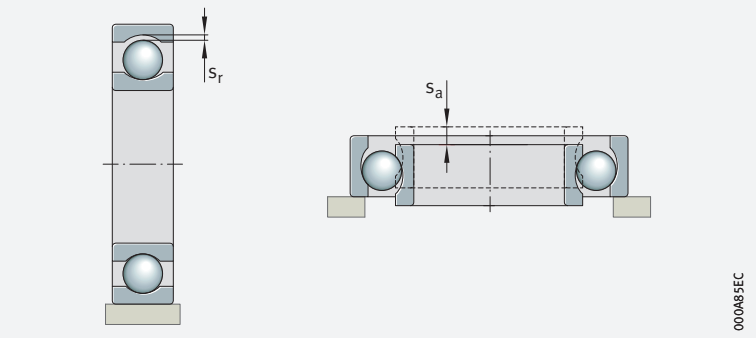

✎ *Relationship between radial and axial internal clearance*

With various bearing types, the radial internal clearance s_r and the axial internal clearance s_a are dependent on each other. Guide values for the correlation between radial and axial internal clearance are shown for some bearing types ➤*106*|*3*.

3
Correlation between axial internal clearance and radial internal clearance

Bearing type		Ratio between axial and radial internal clearance s_a/s_r
Self-aligning ball bearings		$2{,}3 \cdot Y_0$ [1]
Spherical roller bearings		$2{,}3 \cdot Y_0$ [1]
Tapered roller bearings	Single row, arranged in pairs	$4{,}6 \cdot Y_0$ [1]
	Matched pairs (DF)	$2{,}3 \cdot Y_0$ [1]
Angular contact ball bearings	Double row, series 32 and 33	1,4
	Double row, series 32..-B and 33..-B	2
Four point contact bearings		1,4

[1] Y_0 = *axial load factor in accordance with product table.*

If the operating clearance is an important design criterion, please consult Schaeffler.

The calculation module BEARINX-online Shaft Calculation, which is available from Schaeffler free of charge, can be used to calculate and analyse the operating clearance.

Calculation example

✎ *Example: deep groove ball bearing 6008-C3*

For deep groove ball bearings, the calculation of the axial internal clearance is shown in the following example:

Deep groove ball bearing		6008-C3
Bore diameter d		40 mm
Radial internal clearance before fitting		15 µm to 33 µm
Actual radial internal clearance		24 µm
Mounting tolerance	Shaft	k5
	Housing	J6
Reduction in radial internal clearance during fitting		14 µm
Radial internal clearance after fitting		24 µm – 14 µm = 10 µm
Ratio s_a/s_r ➤*107*|*14*		13

✎ *Axial internal clearance*

$s_a = 13 \cdot 10\ \mu m = 130\ \mu m$

14

Approximate calculation of the ratio of radial to axial internal clearance for deep groove ball bearings

s_a = *axial internal clearance*
s_r = *radial internal clearance*
d = *bearing bore diameter*

① *Bearing series*

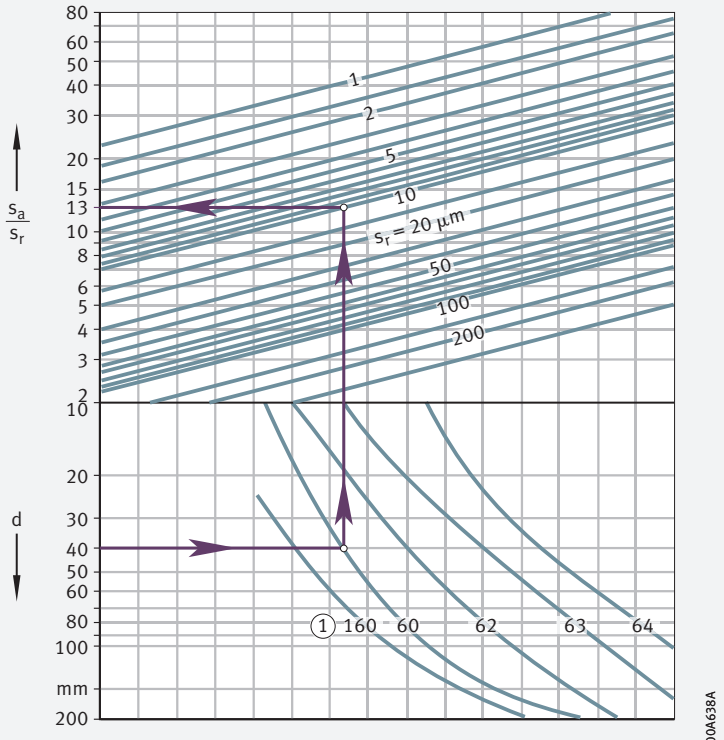

7.7 Bearing materials

Standard steels

Schaeffler rolling bearings fulfil the requirements for fatigue strength, wear resistance, hardness, toughness and structural stability.
The material used for the rings and rolling elements is generally a low-alloy, through hardening chromium steel of high purity. For bearings subjected to considerable shock loads and reversed bending stresses, case hardening steel is also used (supplied by agreement). The results of research as well as practical experience confirm that bearings made from the steel currently used as standard can achieve their endurance limit if loads are not excessively high and the lubrication and cleanliness conditions are favourable.

High Nitrogen Steel

For the most challenging conditions

Through the use of special bearings made from HNS (High Nitrogen Steel, supplied by agreement), it is possible to achieve adequate service life even under the most challenging conditions (high temperatures, moisture, contamination).

High performance steels Cronidur and Cronitect

Steels for increased requirements

For increased performance requirements, highly corrosion-resistant, nitrogen-alloyed martensitic HNS steels are available, such as Cronidur and Cronitect.

In contrast to Cronidur, the more economical alternative Cronitect has nitrogen introduced into the structure by means of a surface layer hardening process.

Both steels are clearly superior to conventional corrosion-resistant steels for rolling bearings in terms of corrosion resistance and fatigue strength.

Ceramic materials

Hybrid bearings

Ceramic hybrid spindle bearings contain balls made from silicon nitride. These ceramic balls are substantially lighter than steel balls.
The centrifugal forces and friction are significantly lower.

Hybrid bearings allow very high speeds, even with grease lubrication, as well as long operating life and low operating temperatures.

Materials and bearing components

Suitable materials and their use in rolling bearing technology ➤ *108* | ▦ *4*.

▦ **4**
Materials and bearing components

Material	Bearing components (example)
Through hardening chromium steel – rolling bearing steel in accordance with ISO 683-17	Outer and inner ring, axial washer
HNS – High Nitrogen Steel	Outer and inner ring
Corrosion-resistant steel – rolling bearing steel in accordance with ISO 683-17	Outer and inner ring
Case hardening steel	For example, outer ring of yoke type track rollers
Flame or induction hardening steel	Roller stud of stud type track rollers
Steel strip to EN 10139, SAE J403	Outer ring for drawn cup needle roller bearings
Silicon nitride	Ceramic balls
Brass alloy	Cage
Aluminium alloy	Cage
Polyamide (thermoplastic)	Cage
NBR, FKM, TPU	Sealing ring

Corrosion protection by Corrotect

Rolling bearings are not resistant to corrosion by water or agents containing alkalis or acids but are often exposed to these corrosion-inducing agents. In these applications, corrosion protection is therefore a decisive factor in achieving a long operating life of the bearings.

In principle, corrosion-resistant steels to ISO 683-17 can be used. These bearings have the prefix S. For higher requirements, it may be advisable to use the high performance steels Cronidur and Cronitect.

Corrotect coating

Special coatings

An extensive modular coating concept currently offers a wide range of surface improvements aimed at increasing the performance and rating life of bearing components. The “added value in the form of coatings” thus provided, is now established as a standard procedure for a wide variety of Schaeffler components.

Various coating variants and coating thicknesses

Thin anti-corrosion coating systems of 0,5 µm – 3 µm and 2 µm – 5 µm are available for bearing applications. Various Corrotect variants with coating thicknesses > 5 µm also exist, which can be applied as necessary. The Corrotect coatings thus offer corrosion protection times – as a function of the coating variant and coating thickness – of ≧ 720 h against base metal corrosion (in accordance with DIN EN ISO 9227).

Cr(VI)-free coatings

Systems are free from Cr(VI), provide effective protection against corrosion and, as result, extend the useful life of Schaeffler components. In isolated cases, the dimensional changes brought about by the coating must be taken into account in a further processing operation.

Detailed information on the modular coating concept and individual coating systems can be found in Technical Product Information TPI 186 “Higher Performance Capacity Through the Use of Coatings”. This publication can be requested from Schaeffler.

Advantages of Corrotect thin coating

The advantages of the special coating Corrotect are all-round corrosion protection, including the turned surfaces of chamfers and radii ➤ *109*| *15*. It also gives long-term prevention of rust penetration beneath seals and smaller bright spots are protected against corrosion by the cathodic protection effect. In comparison with uncoated parts, operating life is significantly increased by the corrosion protection. There is no decrease in load carrying capacity (such as occurs in the use of corrosion-resistant steels). It is therefore theoretically possible to replace uncoated bearings by coated bearings of the same dimensions. However, it is advisable to check the suitability for the specific application in advance since, for example, abrasion may occur. During storage, there is no need to use organic preservatives.

Mounting of Corrotect-coated bearings

Before bearings with Corrotect coating are mounted, compatibility with the media should always be checked.

For lower press-in forces, the surface of the parts should be lightly greased, the tolerances are increased by the thickness of the coating.

15
Coated and uncoated part after a salt spray test

Test time 24 h in salt spray

① *With Corrotect coating*
② *Uncoated*

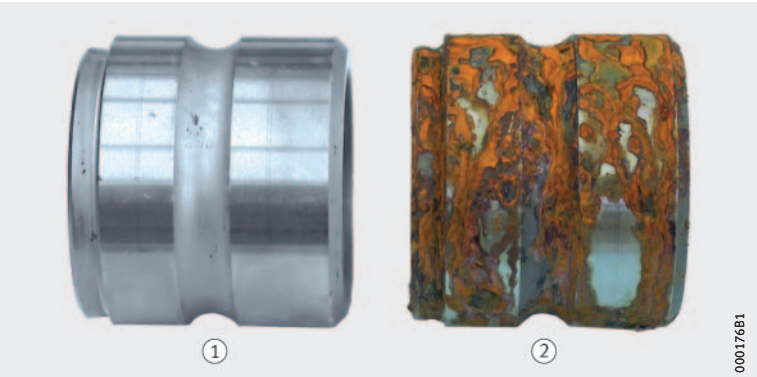

Information on REACH

The components of our products may be produced from alloys that contain the substance lead (CAS 7439-92-1, EINECS 231-100-4) from the SVHC list in mass fractions $w_B \geqq 0{,}1$ %. Lead is frequently used in copper, steel and aluminium alloys.

Examples:

- rolling bearings with brass cages
- plain bearings with bronze bushes
- housings with brass lubrication nipples
- linear rolling and plain bearings with brass or bronze components

Notification requirements and regulations:

- notification requirement in accordance with Directive (EC) 1907/2006 (REACH)
- observe occupational safety regulations such as TRGS 505, (German) Federal Institute for Occupational Safety and Health *https://www.baua.de*

7.8 Cages

The functions of cages

Cage is a retainer with pockets for the rolling elements

Cage pockets, which are separated from each other by bars and are uniformly distributed around the circumference of the cage, maintain the spacing of the rolling elements relative to each other and ensure the distribution of load. In addition, the bars prevent sliding friction between adjacent rolling elements and guide the rolling elements parallel to the bearing axis in the load-free zone. In the case of cylindrical and needle roller bearings, they additionally prevent skewing of the rolling elements by guiding the rolling elements parallel to the bearing axis.

Cages ensure spacing between the rolling elements, even in the load-free zone

In the load-free zone, the rolling elements are no longer driven by the inner or outer ring. As a result, they fall behind relative to the direction of rotation of the rings. Cages ensure that the spacing between the rolling elements is maintained, even in the load-free zone.

Where bearings are separable and can be swivelled, the rolling elements cannot escape from the bearing

In the case of bearings that are separable and can be swivelled, such as tapered roller, spherical roller and some cylindrical roller bearings, cages prevent rolling elements from falling out of the bearing. The rolling element set and cage can thus be mounted and dismounted as a complete unit.

Sheet metal or solid cages

Sheet metal cages

Rolling bearing cages are subdivided into sheet metal and solid cages. The cages are predominantly made from steel and, for some bearings, from brass ➤ *112* | *16*. In comparison with solid cages made from metal, sheet metal cages are of lower mass. Since a sheet metal cage only fills a small proportion of the gap between the inner and outer ring, lubricant can easily reach the interior of the bearing and is held on the cage. In general, a sheet steel cage is only included in the bearing designation if it is not defined as a standard version of the bearing.

Solid cages

These cages are made from metal, laminated fabric or plastic ➤ *112* | *17*. They can be identified from the bearing designation.

Solid cages made from metal or laminated fabric

Solid cages made from metal are used where there are requirements for high cage strength and at high temperatures. Solid cages are also used if the cage must be guided on ribs. Rib-guided cages for bearings running at high speeds are made in many cases from light materials, such as light metal or laminated fabric, in order to achieve low inertia forces.

Solid cages made from polyamide PA66

Solid cages made from polyamide PA66 are produced using the injection moulding process ➤ *112* | *18*. As a result, cage types can generally be realised that allow designs with particularly high load carrying capacity. The elasticity and low mass of polyamide are favourable under shock type bearing loads, high accelerations and decelerations and tilting of the bearing rings in relation to each other. Polyamide cages have very good sliding and emergency running characteristics.

Cages made from glass fibre reinforced polyamide PA66 are suitable for continuous temperatures up to +120 °C. For higher operating temperatures, plastics such as PA46 or PEEK can be used.

When using oil lubrication, additives in the oil can impair the cage operating life. Aged oil can also impair the cage operating life at high temperatures, so attention must be paid to compliance with the oil change intervals.

Cage designs

Proven cage designs ➤*112*|*16* to ➤*112*|*18*.

16
Sheet steel cages

① *Riveted cage for deep groove ball bearings*
② *Window cage for needle roller bearings*
③ *Window cage for spherical roller bearings*

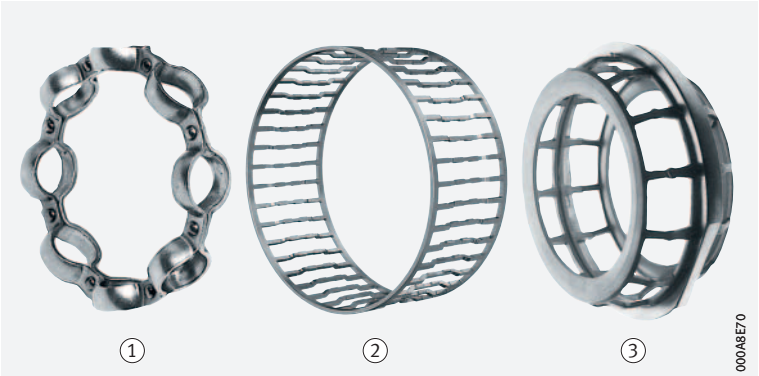

17
Solid brass cages

① *Riveted solid cage for deep groove ball bearings*
② *Window cage for angular contact ball bearings*
③ *Riveted cage with crosspiece rivets for cylindrical roller bearings*



18
Solid cages made from glass fibre reinforced polyamide

① *Window cage for single row angular contact ball bearings*
② *Window cage for cylindrical roller bearings*
③ *Window cage for needle roller bearings*

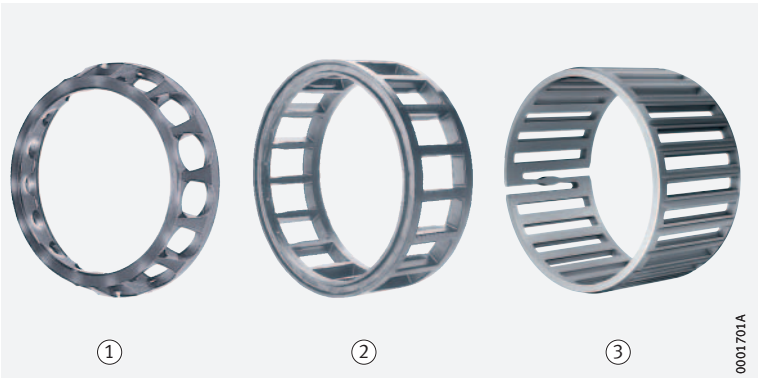

Guidance of cages

The cages are guided by rolling elements or ribs

A further means of distinguishing between cages is their guidance method ➤*113*|*19*. Most cages are guided by the rolling elements and do not have a suffix for the guidance method. If guidance is by the bearing outer ring, the suffix A is used. Cages that are guided on the inner ring have the suffix B.

Standard cages are suitable under normal operating conditions

Under normal operating conditions, the cage design defined as the standard cage is generally suitable. Standard cages, which may differ within a bearing series according to the bearing size, are described in the product chapters. Under special operating conditions, a cage that is suitable for the specific conditions must be selected.

19
Guidance of cages

① *Guided by rolling elements*
② *Guided by ribs*

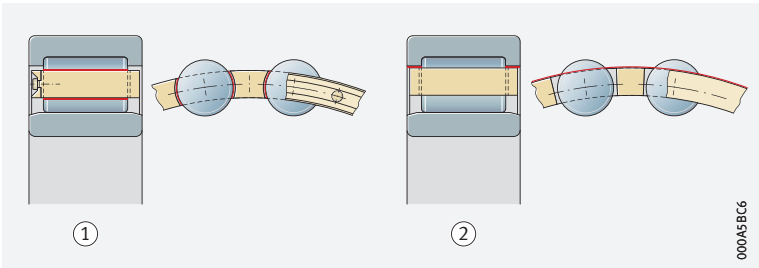

7.9 Operating temperature

Standard rolling bearings can be used up to +120 °C

Rolling bearings are heat treated such that, depending on the bearing type, they are generally dimensionally stable up to +120 °C (certain bearings up to +150 °C). Operating temperatures above +150 °C require special heat treatment. Bearings treated in this way are available by agreement and are identified by the suffix S1, S2, S3 or S4 to DIN 623-1 ➤*113*|*5*.

Above S1, there is a reduction in hardness that must be taken into consideration in the rating life calculation.

5
Operating temperature and suffixes for dimensionally stabilised bearings

Maximum operating temperature °C	Suffix for dimensionally stabilised bearings
+120	SN[1] (suffix SN not stated)
+150	S0[1]
+150	S0B[2] (suffix B not stated)
+200	S1[1]
+250	S2[1]
+300	S3[1]
+350	S4[1]

1) *Inner ring and outer ring stabilised for stated operating temperature*
2) *Inner ring stabilised up to +150 °C*

Track rollers

Normal operating temperature = +70 °C

An operating temperature of +70 °C is regarded as a normal operating temperature. Further temperature data in the product descriptions must be observed.

Sealed bearings

Temperature limits

The permissible temperature for sealed bearings is dependent on the requirements for the operating life of the grease filling and on the action of the contact seals. Sealed bearings are greased with specially tested, high performance, high quality greases. These greases can withstand +120 °C for short periods. At or above continuous temperatures of +70 °C, a reduction in the operating life of standard greases with a lithium soap base must be expected.

Special greases are often required for high temperatures

In many cases, adequate operating life values are only achieved at high temperatures through the use of special greases. In these cases, it must also be checked whether seals made from especially heat-resistant materials must be used. The operating limit of normal contact seals is +100 °C.

If high temperature synthetic materials are used for seals and greases, it must be noted that the particularly high performance materials containing fluoride may give off harmful gases and vapours when heated to approx. +300 °C and above. This may occur, for example, if a welding torch is used in the dismounting of a bearing.

Observe safety data sheets at high temperatures

High temperatures are critical especially in the case of seals made from fluoro rubber (FKM, FPM, e.g. Viton®) or greases containing fluoride, such as the rolling bearing greases Arcanol TEMP200 and greases to GA11. If high temperatures are unavoidable, attention must be paid to the valid safety data sheet for the specific fluoride-containing material, which can be obtained upon request.

7.10 Dimensional and running tolerances

International standards are usually valid for the main dimensions and running accuracy of rolling bearings. Unless specified otherwise, the tolerances for radial rolling bearings correspond to ISO 492:2014 and, for axial rolling bearings, to ISO 199:2014. Information on which bearings are supplied with which tolerances is provided in the relevant product chapters.

Main dimensions

Main dimensions of bearings ➤115|20.

20
Main dimensions of bearings

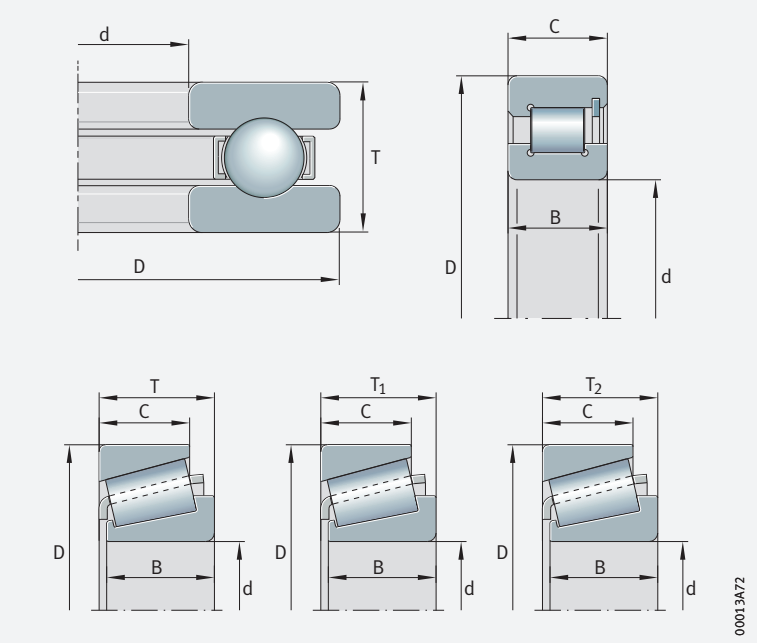

Accuracy (tolerance classes)

Tolerance class Normal

The dimensional and running accuracy of rolling bearings corresponds to tolerance class Normal. For bearings with increased accuracy, the tolerances are restricted to values in the classes 6, 5, 4 and 2. Tolerance tables for the individual tolerance classes ➤124|8 to ➤137|28.

Super precision bearings

In addition to the standardised tolerance classes, super precision bearings are also produced to the tolerance classes P4S, SP and UP. These tolerances are listed in the relevant product descriptions.

Tolerance symbols, toleranced characteristics, deviations for radial and axial rolling bearings

The following restrictions apply to the stated specification modifiers in ➤117|6 and ➤122|7:

- The specification modifier (LP) is not indicated on a drawing if the two-point size is defined as the default specification.
- The specification modifier (GN) is not suitable for cases where there is no material with mating contact, for example the outer ring of a tapered roller bearing with significant edge rounding on the back face and small front face. Solutions must be developed within the framework of the GPS system and taken into consideration in the future

6 *Symbols for nominal dimensions, characteristics and specification modifiers for radial rolling bearings in accordance with ISO 492:2014*

Symbol for nominal dimension[1)2)] Tolerance symbol for characteristic[2)]	GPS symbol and specification modifier Symbols in accordance with ISO 1101 and ISO 14405-1	Description for radial bearings In accordance with ISO 492:2014 (based on ISO 1101, ISO 5459 and ISO 14405-1)	Old term In accordance with ISO 1132-1: 2000
		Width	
B	–	Nominal inner ring width	Nominal inner ring width
$t_{\Delta Bs}$	(LP)	**Symmetrical rings** Deviation of a two-point size of inner ring width from its nominal size $\Delta Bs = Bs - B$ Bs = single two-point size of inner ring width	Deviation of a single inner ring width
	(GN) ALS ◇ (LP)	**Asymmetrical rings, upper limit** Deviation of a minimum circumscribed size of inner ring width, between two opposite lines, in any longitudinal section which includes the inner ring bore axis, from its nominal size	
		Asymmetrical rings, lower limit Deviation of a two-point size of inner ring width from its nominal size	
t_{VBs}	(LP) (SR)	**Symmetrical rings** Range of two-point sizes of inner ring width VBs = Bs max – Bs min	Variation of inner ring width
	(GN) ALS (SR) ◇	**Asymmetrical rings** Range of minimum circumscribed sizes of inner ring width, between two opposite lines, obtained from any longitudinal section which includes the inner ring bore axis	
C	–	Nominal outer ring width	Nominal outer ring width
$t_{\Delta Cs}$	(LP)	**Symmetrical rings** Deviation of a two-point size of outer ring width from its nominal size $\Delta Cs = Cs - C$ Cs = single two-point size of outer ring width	Deviation of a single outer ring width
	(GN) ALS ◇ (LP)	**Asymmetrical rings, upper limit** Deviation of a minimum circumscribed size of outer ring width, between two opposite lines, in any longitudinal section which includes the outer ring outside surface axis, from its nominal size	
		Asymmetrical rings, lower limit Deviation of a two-point size of outer ring width from its nominal size	

continued ▼

1) *Symbols for the nominal dimension are printed in bold; they indicate size dimensions and spacings.*

2) *Symbols in accordance with ISO 15241 (exception: font).*

6
Symbols for nominal dimensions, characteristics and specification modifiers for radial rolling bearings in accordance with ISO 492:2014

Symbol for nominal dimension[1)2)] Tolerance symbol for characteristic[2)]	GPS symbol and specification modifier Symbols in accordance with ISO 1101 and ISO 14405-1	Description for radial bearings In accordance with ISO 492:2014 (based on ISO 1101, ISO 5459 and ISO 14405-1)	Old term In accordance with ISO 1132-1: 2000
t_{VCs}	(LP)(SR)	**Symmetrical rings** Range of two-point sizes of outer ring width VCs = Cs max – Cs min	Variation of outer ring width
	(GN)ALS(SR) 	**Asymmetrical rings** Range of minimum circumscribed sizes of outer ring width, between two opposite lines, obtained from any longitudinal section which includes the outer ring outside surface axis	
C_1	–	Nominal outer ring flange width	Nominal outer ring flange width
$t_{\Delta C1s}$	(LP)	Deviation of a two-point size of outer ring flange width from its nominal size	Deviation of a single outer ring flange width
t_{VC1s}	(LP)(SR)	Range of two-point sizes of outer ring flange width VC1s = C1s max – C1s min	Variation of outer ring flange width
		Diameter	
d	–	Nominal bore diameter of a cylindrical bore or at the theoretical small end of a tapered bore	Nominal bore diameter
$t_{\Delta ds}$	(LP)	Deviation of a two-point size of bore diameter from its nominal size $\Delta ds = ds - d$	Deviation of a single bore diameter
t_{Vdsp}	(LP)(SR)ACS	Range of two-point sizes of bore diameter in any cross-section of a cylindrical or tapered bore Vdsp = ds max – ds min	Variation of bore diameter in a single plane
$t_{\Delta dmp}$	(LP)(SD)ACS	**Cylindrical bore** Deviation of a mid-range size (out of two-point sizes) of bore diameter in any cross-section from its nominal size dmp = (d max + d min)/2 $\Delta dmp = dmp - d$	Deviation of mean bore diameter in a single plane
	(LP)(SD)SCS	**Tapered bore** Deviation of a mid-range size (out of two-point sizes) of bore diameter at the theoretical small end of a tapered bore from its nominal size	

continued ▲▼

1) *Symbols for the nominal dimension are printed in bold; they indicate size dimensions and spacings.*

2) *Symbols in accordance with ISO 15241 (exception: font).*



6
Symbols for nominal dimensions, characteristics and specification modifiers for radial rolling bearings in accordance with ISO 492:2014

Symbol for nominal dimension[1)2)] Tolerance symbol for characteristic[2)]	GPS symbol and specification modifier Symbols in accordance with ISO 1101 and ISO 14405-1	Description for radial bearings In accordance with ISO 492:2014 (based on ISO 1101, ISO 5459 and ISO 14405-1)	Old term In accordance with ISO 1132-1: 2000
t_{Vdmp}	(LP)(SD)ACS(SR)	Range of mid-range sizes (out of two-point sizes) of bore diameter obtained from any cross-section of a cylindrical bore Vdmp = dmp max – dmp min	Variation of mean bore diameter
$\mathbf{d_1}$	–	Nominal diameter at the theoretical large end of a tapered bore	–
$t_{\Delta d1mp}$	(LP)(SD)SCS	Deviation of a mid-range size (out of two-point sizes) of bore diameter at the theoretical large end of a tapered bore from its nominal size	–
D	–	Nominal outside diameter	Nominal outside diameter
$t_{\Delta Ds}$	(LP)	Deviation of a two-point size of outside diameter from its nominal size	Deviation of a single outside diameter
t_{VDsp}	(LP)(SR)ACS	Range of two-point sizes of outside diameter in any cross-section	Variation of outside diameter in a single plane
$t_{\Delta Dmp}$	(LP)(SD)ACS	Deviation of a mid-range size (out of two-point sizes) of outside diameter in any cross-section from its nominal size Dmp = (D max + D min)/2 ΔDmp = Dmp – D	Deviation of mean outside diameter in a single plane
t_{VDmp}	(LP)(SD)ACS(SR)	Range of mid-range sizes (out of two-point sizes) of outside diameter obtained from any cross-section VDmp = Dmp max – Dmp min	Variation of mean outside diameter
$\mathbf{D_1}$	–	Nominal outside diameter of outer ring flange	–
$t_{\Delta D1s}$	(LP)	Deviation of a two-point size of outside diameter of outer ring flange from its nominal size	–

continued ▲▼

1) *Symbols for the nominal dimension are printed in bold; they indicate size dimensions and spacings.*

2) *Symbols in accordance with ISO 15241 (exception: font).*

6
Symbols for nominal dimensions, characteristics and specification modifiers for radial rolling bearings in accordance with ISO 492:2014

Symbol for nominal dimension[1)2)] Tolerance symbol for characteristic[2)]	GPS symbol and specification modifier Symbols in accordance with ISO 1101 and ISO 14405-1	Description for radial bearings In accordance with ISO 492:2014 (based on ISO 1101, ISO 5459 and ISO 14405-1)	Old term In accordance with ISO 1132-1:2000
		Running accuracy	
t_{Kea}	↗ [3)]	Circular radial run-out of outer ring outside surface of assembled bearing with respect to datum, i.e. axis, established from the inner ring bore surface	Radial run-out of outer ring of assembled bearing
t_{Kia}	↗ [3)]	Circular radial run-out of inner ring bore surface of assembled bearing with respect to datum, i.e. axis, established from the outer ring outside surface	Radial run-out of inner ring of assembled bearing
t_{Sd}	↗ [3)]	Circular axial run-out of inner ring face with respect to datum, i.e. axis, established from the inner ring bore surface	Perpendicularity of inner ring face with respect to the bore
t_{SD}	⊥	Perpendicularity of outer ring outside surface axis with respect to datum established from the outer ring face	Perpendicularity of outer ring outside surface with respect to the face
t_{SD1}	⊥	Perpendicularity of outer ring outside surface axis with respect to datum established from the outer ring flange back face	Perpendicularity of outer ring outside surface with respect to the flange back face
t_{Sea}	↗ [3)]	Circular axial run-out of outer ring face of assembled bearing with respect to datum, i.e. axis, established from the inner ring bore surface	Axial run-out of outer ring of assembled bearing
t_{Sea1}	↗ [3)]	Circular axial run-out of outer ring flange back face of assembled bearing with respect to datum, i.e. axis, established from the inner ring bore surface	Axial run-out of outer ring flange back face of assembled bearing
t_{Sia}	↗ [3)]	Circular axial run-out of inner ring face of assembled bearing with respect to datum, i.e. axis, established from the outer ring outside surface	Axial run-out of inner ring of assembled bearing
		Tapered bore	
SL	–	Taper slope: Taper slope is the difference between nominal diameters at the theoretical large end and small end of a tapered bore $SL = d_1 - d$ SL = spacing	–
$t_{\Delta SL}$	–	Deviation of taper slope of a tapered inner ring bore from its nominal size (description based on DIN EN ISO 1119) $\Delta SL = \Delta d1mp - \Delta dmp$	–
α	–	Frustum angle of tapered inner ring bore	–

continued ▲▼

1) *Symbols for the nominal dimension are printed in bold; they indicate size dimensions and spacings.*
2) *Symbols in accordance with ISO 15241 (exception: font).*
3) *Specification modifiers for the direction of action of the mass, as well as fixed and movable parts necessary in accordance with ISO/TS 17863.*

6
Symbols for nominal dimensions, characteristics and specification modifiers for radial rolling bearings in accordance with ISO 492:2014

Symbol for nominal dimension[1)2)] Tolerance symbol for characteristic[2)]	GPS symbol and specification modifier Symbols in accordance with ISO 1101 and ISO 14405-1	Description for radial bearings In accordance with ISO 492:2014 (based on ISO 1101, ISO 5459 and ISO 14405-1)	Old term In accordance with ISO 1132-1:2000
		Width of assembled bearing	
T	–	Nominal assembled bearing width	Nominal bearing width
$t_{\Delta Ts}$	GN [3)]	Deviation of minimum circumscribed size of assembled bearing width from its nominal size	Deviation of the actual bearing width
$\mathbf{T_1}$	–	Nominal effective width of inner subunit assembled with a master outer ring	Nominal effective width of inner subunit
$t_{\Delta T1s}$	GN [3)]	Deviation of minimum circumscribed size of effective width (inner subunit assembled with a master outer ring) from its nominal size	Deviation of the actual effective width of inner subunit
$\mathbf{T_2}$	–	Nominal effective width of outer ring assembled with a master inner subunit	Nominal effective width of outer ring
$t_{\Delta T2s}$	GN [3)]	Deviation of minimum circumscribed size of effective width (outer ring assembled with a master inner subunit) from its nominal size	Deviation of the actual effective width of outer ring
$\mathbf{T_F}$	–	Nominal assembled flanged bearing width	–
$t_{\Delta TFs}$	GN [3)]	Deviation of minimum circumscribed size of assembled flange bearing width from its nominal size	–
$\mathbf{T_{F2}}$	–	Nominal effective width of flanged outer ring assembled with a master inner subunit	–
$t_{\Delta TF2s}$	GN [3)]	Deviation of minimum circumscribed size of effective width (flanged outer ring assembled with a master inner subunit) from its nominal size	–

continued ▲

1) *Symbols for the nominal dimension are printed in bold; they indicate size dimensions and spacings.*

2) *Symbols in accordance with ISO 15241 (exception: font).*

3) *Specification modifiers for the direction of action of the mass, as well as fixed and movable parts necessary in accordance with ISO/TS 17863.*

7 *Symbols for nominal dimensions, characteristics and specification modifiers for axial rolling bearings in accordance with ISO 199:2014*

Symbol for nominal dimension[1)2)] Tolerance symbol for characteristic[2)]	GPS symbol and specification modifier Symbols in accordance with ISO 1101 and ISO 14405-1	Description for axial bearings In accordance with ISO 199:2014 (based on ISO 1101, ISO 5459 and ISO 14405-1)	Old term In accordance with ISO 1132-1:2000
		Diameter	
d	–	Nominal bore diameter of shaft washer, single-direction bearing	Nominal bore diameter of shaft washer
$t_{\Delta dmp}$	(LP)(SD)ACS	Deviation of a mid-range size (out of two-point sizes) of shaft washer bore diameter in any cross-section from its nominal size dmp = (d max + d min)/2 Δdmp = dmp – d	Deviation of mean bore diameter in a single plane
t_{Vdsp}	(LP)(SR)ACS	Range of two-point sizes of shaft washer bore diameter in any cross-section Vdsp = ds max – ds min	Variation of bore diameter in a single plane
$\mathbf{d_2}$	–	Nominal bore diameter of central shaft washer, double-direction bearing	–
$t_{\Delta d2mp}$	(LP)(SD)ACS	Deviation of a mid-range size (out of two-point sizes) of central shaft washer bore diameter in any cross-section from its nominal size d2mp = (d2 max + d2 min)/2	–
t_{Vd2sp}	(LP)(SR)ACS	Range of two-point sizes of central shaft washer bore diameter in any cross-section	Variation of bore diameter in a single plane
D	–	Nominal outside diameter of housing washer	Nominal outside diameter of bore (housing washer)
$t_{\Delta Dmp}$	(LP)(SD)ACS	Deviation of a mid-range size (out of two-point sizes) of housing washer outside diameter in any cross-section from its nominal size Dmp = (D max + D min)/2 ΔDmp = Dmp – D	Deviation of mean outside diameter in a single plane
t_{VDsp}	(LP)(SR)ACS	Range of two-point sizes of housing washer outside diameter in any cross-section VDsp = Ds max – Ds min	Variation of outside diameter in a single plane

continued ▼

1) *Symbols for the nominal dimension are printed in bold; they indicate size dimensions and spacings.*

2) *Symbols in accordance with ISO 1101 and ISO 14405-1.*

7
Symbols for nominal dimensions, characteristics and specification modifiers for axial rolling bearings in accordance with ISO 199:2014

Symbol for nominal dimension[1)2)] Tolerance symbol for characteristic[2)]	GPS symbol and specification modifier Symbols in accordance with ISO 1101 and ISO 14405-1	Description for axial bearings In accordance with ISO 199:2014 (based on ISO 1101, ISO 5459 and ISO 14405-1)	Old term In accordance with ISO 1132-1: 2000
		Height	
T	–	Nominal assembled bearing height, single-direction bearing	Nominal bearing height
$t_{\Delta Ts}$	(GN) [3)]	Deviation of minimum circumscribed size of assembled bearing height from its nominal size, single-direction bearing	Deviation of the actual bearing height
$\mathbf{T_1}$	–	Nominal assembled bearing height, double-direction bearing	–
$t_{\Delta T1s}$	(GN) [3)]	Deviation of minimum circumscribed size of assembled bearing height from its nominal size, double-direction bearing	–
t_{Se} [4)]	(LP)(SR)	**Axial cylindrical roller bearings** Range of two-point sizes of thickness between housing washer raceway and the back face	Variation in thickness between housing washer raceway and back face
	(LS)(SN)ALS(SR) 	**Axial ball bearings** Range of minimum spherical sizes between the raceway and the opposite back face of the housing washer, obtained from any longitudinal section which includes the housing washer outside surface axis	
t_{Si} [4)]	(LP)(SR)	**Axial cylindrical roller bearings** Range of two-point sizes of thickness between shaft washer raceway and the back face	Variation in thickness between shaft washer raceway and back face
	(LS)(SN)ALS(SR) 	**Axial ball bearings** Range of minimum spherical sizes between the raceway and the opposite back face of the shaft washer, obtained from any longitudinal section which includes the shaft washer bore axis	

continued ▲

1) *Symbols for the nominal dimension are printed in bold; they indicate size dimensions and spacings.*
2) *Symbols in accordance with ISO 1101 and ISO 14405-1.*
3) *Specification modifiers for the direction of action of the mass in accordance with ISO/TS 17863.*
4) *Valid only for axial ball bearings and axial cylindrical roller bearings with a 90° contact angle.*

Radial bearings, excluding tapered roller bearings

8 *Tolerance class Normal, inner ring*

Tolerance symbols in accordance with ISO 492 ➤ *117* | 6
U = *upper limit deviation*
L = *lower limit deviation*

Nominal bore diameter d		Bore deviation $t_{\Delta dmp}$		Variation				Radial runout
				t_{Vdsp} µm max.			t_{Vdmp}	t_{Kia}
mm		µm		Diameter series			µm	µm
over	incl.	U	L	9	0, 1	2, 3, 4	max.	max.
–	2,5	0	−8	10	8	6	6	10
2,5	10	0	−8	10	8	6	6	10
10	18	0	−8	10	8	6	6	10
18	30	0	−10	13	10	8	8	13
30	50	0	−12	15	12	9	9	15
50	80	0	−15	19	19	11	11	20
80	120	0	−20	25	25	15	15	25
120	180	0	−25	31	31	19	19	30
180	250	0	−30	38	38	23	23	40
250	315	0	−35	44	44	26	26	50
315	400	0	−40	50	50	30	30	60
400	500	0	−45	56	56	34	34	65
500	630	0	−50	63	63	38	38	70
630	800	0	−75	–	–	–	–	80
800	1 000	0	−100	–	–	–	–	90
1 000	1 250	0	−125	–	–	–	–	100
1 250	1 600	0	−160	–	–	–	–	120
1 600	2 000	0	−200	–	–	–	–	140

9 *Tolerance class Normal, inner ring width tolerances*

Tolerance symbols in accordance with ISO 492 ➤ *117* | 6
U = *upper limit deviation*
L = *lower limit deviation*

Nominal bore diameter d		Deviation of inner ring width $t_{\Delta Bs}$ µm			Variation of inner ring width t_{VBs}
mm		All	Normal	Modified[1)]	µm
over	incl.	U	L	L	max.
–	2,5	0	−40	–	12
2,5	10	0	−120	−250	15
10	18	0	−120	−250	20
18	30	0	−120	−250	20
30	50	0	−120	−250	20
50	80	0	−150	−380	25
80	120	0	−200	−380	25
120	180	0	−250	−500	30
180	250	0	−300	−500	30
250	315	0	−350	−500	35
315	400	0	−400	−630	40
400	500	0	−450	–	50
500	630	0	−500	–	60
630	800	0	−750	–	70
800	1 000	0	−1 000	–	80
1 000	1 250	0	−1 250	–	100
1 250	1 600	0	−1 600	–	120
1 600	2 000	0	−2 000	–	140

1) *Only for bearings manufactured specifically for use as matched pairs, with the exception of deep groove ball bearings.*

10 Tolerance class Normal, outer ring[1]

Tolerance symbols in accordance with ISO 492 ➤117|6

U = *upper limit deviation*

L = *lower limit deviation*

Nominal size of outside diameter D		Deviation of outside diameter $t_{\Delta Dmp}$		Variation					Radial runout
				t_{VDsp} µm max.				t_{VDmp}[2]	t_{Kea}
				Open bearings			Bearings with sealing shields or sealing washers		
mm		µm		Diameter series				µm	µm
over	incl.	U	L	9	0, 1	2, 3, 4		max.	max.
–	6	0	−8	10	8	6	10	6	15
6	18	0	−8	10	8	6	10	6	15
18	30	0	−9	12	9	7	12	7	15
30	50	0	−11	14	11	8	16	8	20
50	80	0	−13	16	13	10	20	10	25
80	120	0	−15	19	19	11	26	11	35
120	150	0	−18	23	23	14	30	14	40
150	180	0	−25	31	31	19	38	19	45
180	250	0	−30	38	38	23	–	23	50
250	315	0	−35	44	44	26	–	26	60
315	400	0	−40	50	50	30	–	30	70
400	500	0	−45	56	56	34	–	34	80
500	630	0	−50	63	63	38	–	38	100
630	800	0	−75	94	94	55	–	55	120
800	1 000	0	−100	125	125	75	–	75	140
1 000	1 250	0	−125	–	–	–	–	–	160
1 250	1 600	0	−160	–	–	–	–	–	190
1 600	2 000	0	−200	–	–	–	–	–	220
2 000	2 500	0	−250	–	–	–	–	–	250

1) *$t_{\Delta Cs}$, $t_{\Delta C1s}$, t_{VCs} and t_{VC1s} are identical to $t_{\Delta Bs}$ and t_{VBs} for the inner ring of the corresponding bearing ➤124|9*

2) *Applies before assembly of the bearing and after removal of internal and/or external snap rings.*

Radial bearings, excluding tapered roller bearings

11 Tolerance class 6, inner ring

Tolerance symbols in accordance with ISO 492 ➤ 117 | ▦ 6
U = *upper limit deviation*
L = *lower limit deviation*

Nominal bore diameter d		Bore deviation $t_{\Delta dmp}$		Variation				Radial runout
				t_{Vdsp} μm max.			t_{Vdmp}	t_{Kia}
mm		μm		Diameter series			μm	μm
over	incl.	U	L	9	0, 1	2, 3, 4	max.	max.
–	2,5	0	–7	9	7	5	5	5
2,5	10	0	–7	9	7	5	5	6
10	18	0	–7	9	7	5	5	7
18	30	0	–8	10	8	6	6	8
30	50	0	–10	13	10	8	8	10
50	80	0	–12	15	15	9	9	10
80	120	0	–15	19	19	11	11	13
120	180	0	–18	23	23	14	14	18
180	250	0	–22	28	28	17	17	20
250	315	0	–25	31	31	19	19	25
315	400	0	–30	38	38	23	23	30
400	500	0	–35	44	44	26	26	35
500	630	0	–40	50	50	30	30	40

12 Tolerance class 6, inner ring width tolerances

Tolerance symbols in accordance with ISO 492 ➤ 117 | ▦ 6
U = *upper limit deviation*
L = *lower limit deviation*

Nominal bore diameter d		Deviation of inner ring width $t_{\Delta Bs}$ μm			Variation of inner ring width t_{VBs}
mm		All	Normal	Modified[1)]	μm
over	incl.	U	L	L	max.
–	2,5	0	–40	–	12
2,5	10	0	–120	–250	15
10	18	0	–120	–250	20
18	30	0	–120	–250	20
30	50	0	–120	–250	20
50	80	0	–150	–380	25
80	120	0	–200	–380	25
120	180	0	–250	–500	30
180	250	0	–300	–500	30
250	315	0	–350	–500	35
315	400	0	–400	–630	40
400	500	0	–450	–	45
500	630	0	–500	–	50

1) *Only for bearings manufactured specifically for use as matched pairs, with the exception of deep groove ball bearings.*

13 Tolerance class 6, outer ring[1]

Tolerance symbols in accordance with ISO 492 ➤117|⊞6

U = *upper limit deviation*

L = *lower limit deviation*

Nominal size of outside diameter D		Deviation of outside diameter $t_{\Delta Dmp}$		Variation					Radial runout
				t_{VDsp} μm max.				t_{VDmp}[2]	t_{Kea}
				Open bearings			Bearings with sealing shields or sealing washers		
mm		μm		Diameter series				μm	μm
over	incl.	U	L	9	0, 1	2, 3, 4		max.	max.
–	6	0	−7	9	7	5	9	5	8
6	18	0	−7	9	7	5	9	5	8
18	30	0	−8	10	8	6	10	6	9
30	50	0	−9	11	9	7	13	7	10
50	80	0	−11	14	11	8	16	8	13
80	120	0	−13	16	16	10	20	10	18
120	150	0	−15	19	19	11	25	11	20
150	180	0	−18	23	23	14	30	14	23
180	250	0	−20	25	25	15	–	15	25
250	315	0	−25	31	31	19	–	19	30
315	400	0	−28	35	35	21	–	21	35
400	500	0	−33	41	41	25	–	25	40
500	630	0	−38	48	48	29	–	29	50
630	800	0	−45	56	56	34	–	34	60
800	1 000	0	−60	75	75	45	–	45	75

[1] *$t_{\Delta Cs}$, $t_{\Delta C1s}$, t_{VCs} and t_{VC1s} are identical to $t_{\Delta Bs}$ and t_{VBs} for the inner ring of the corresponding bearing ➤126|⊞12*

[2] *Applies before assembly of the bearing and after removal of internal and/or external snap rings.*

Radial bearings, excluding tapered roller bearings

14
Tolerance class 5, inner ring

Tolerance symbols in accordance with ISO 492 ➤117|6
U = *upper limit deviation*
L = *lower limit deviation*

Nominal bore diameter d mm		Bore deviation $t_{\Delta dmp}$ µm		Variation t_{Vdsp} µm max. Diameter series		t_{Vdmp} µm	Radial runout t_{Kia} µm	Axial runout t_{Sd} µm
over	incl.	U	L	9	0, 1, 2, 3, 4	max.	max.	max.
–	2,5	0	–5	5	4	3	4	7
2,5	10	0	–5	5	4	3	4	7
10	18	0	–5	5	4	3	4	7
18	30	0	–6	6	5	3	4	8
30	50	0	–8	8	6	4	5	8
50	80	0	–9	9	7	5	5	8
80	120	0	–10	10	8	5	6	9
120	180	0	–13	13	10	7	8	10
180	250	0	–15	15	12	8	10	11
250	315	0	–18	18	14	9	13	13
315	400	0	–23	23	18	12	15	15

15
Tolerance class 5, width tolerances, inner ring

Tolerance symbols in accordance with ISO 492 ➤117|6
U = *upper limit deviation*
L = *lower limit deviation*

Nominal bore diameter d mm		Deviation of inner ring width $t_{\Delta Bs}$ µm			Variation of inner ring width t_{VBs} µm	Axial runout of lateral inner ring face t_{Sia}[1] µm
		All	Normal	Modified[2]		
over	incl.	U	L	L	max.	max.
–	2,5	0	–40	–250	5	7
2,5	10	0	–40	–250	5	7
10	18	0	–80	–250	5	7
18	30	0	–120	–250	5	8
30	50	0	–120	–250	5	8
50	80	0	–150	–250	6	8
80	120	0	–200	–380	7	9
120	180	0	–250	–380	8	10
180	250	0	–300	–500	10	13
250	315	0	–350	–500	13	15
315	400	0	–400	–630	15	20

1) *Only for deep groove and angular contact ball bearings.*
2) *Only for bearings manufactured specifically for use as matched pairs, with the exception of deep groove ball bearings.*

16 Tolerance class 5, outer ring[1]

Tolerance symbols in accordance with ISO 492 ➤117|▦6

U = *upper limit deviation*

L = *lower limit deviation*

Nominal size of outside diameter D		Deviation of outside diameter $t_{\Delta Dmp}$		Variation				Radial runout t_{Kea}	Perpendicularity t_{SD}	Axial runout t_{Sea}[4]
				t_{VDsp}[2] µm max.		t_{VDmp}[3]	t_{VCs}			
mm		µm		Diameter series		µm	µm	µm	µm	µm
over	incl.	U	L	9	0, 1, 2, 3, 4	max.	max.	max.	max.	max.
–	6	0	−5	5	4	3	5	5	4	8
6	18	0	−5	5	4	3	5	5	4	8
18	30	0	−6	6	5	3	5	6	4	8
30	50	0	−7	7	5	4	5	7	4	8
50	80	0	−9	9	7	5	6	8	4	10
80	120	0	−10	10	8	5	8	10	4,5	11
120	150	0	−11	11	8	6	8	11	5	13
150	180	0	−13	13	10	7	8	13	5	14
180	250	0	−15	15	11	8	10	15	5,5	15
250	315	0	−18	18	14	9	11	18	6,5	18
315	400	0	−20	20	15	10	13	20	6,5	20
400	500	0	−23	23	17	12	15	23	7,5	23
500	630	0	−28	28	21	14	18	25	9	25
630	800	0	−35	35	26	18	20	30	10	30

1) *$t_{\Delta Cs}$ is identical to $t_{\Delta Bs}$ for the inner ring of the corresponding bearing ➤128|▦15*

2) *No values are given for radial ball bearings with sealing shields or sealing washers.*

3) *Applies before assembly of the bearing and after removal of internal and/or external snap rings.*

4) *Only for deep groove and angular contact ball bearings.*

Radial bearings, excluding tapered roller bearings

17 Tolerance class 4, inner ring

Tolerance symbols in accordance with ISO 492 ➤117|⊞6
U = *upper limit deviation*
L = *lower limit deviation*

Nominal bore diameter d		Bore deviation $t_{\Delta dmp}$		Deviation of a single bore diameter $t_{\Delta ds}$		Variation t_{Vdsp}		t_{Vdmp}	Radial runout t_{Kia}
		Diameter series							
mm		9		0, 1, 2, 3, 4		9	0, 1, 2, 3, 4	µm	µm
over	incl.	U	L	U	L	max.	max.	max.	max.
–	2,5	0	−4	0	−4	4	3	2	2,5
2,5	10	0	−4	0	−4	4	3	2	2,5
10	18	0	−4	0	−4	4	3	2	2,5
18	30	0	−5	0	−5	5	4	2,5	3
30	50	0	−6	0	−6	6	5	3	4
50	80	0	−7	0	−7	7	5	3,5	4
80	120	0	−8	0	−8	8	6	4	5
120	180	0	−10	0	−10	10	8	5	6
180	250	0	−12	0	−12	12	9	6	8

18 Tolerance class 4, width tolerances, inner ring

Tolerance symbols in accordance with ISO 492 ➤117|⊞6
U = *upper limit deviation*
L = *lower limit deviation*

Nominal bore diameter d		Deviation of inner ring width $t_{\Delta Bs}$			Variation of inner ring width t_{VBs}	Axial runout	
						t_{Sia} [1]	t_{Sd}
mm		All	Normal	Modified [2]	µm	µm	µm
over	incl.	U	L	L	max.	max.	max.
–	2,5	0	−40	−250	2,5	3	3
2,5	10	0	−40	−250	2,5	3	3
10	18	0	−80	−250	2,5	3	3
18	30	0	−120	−250	2,5	4	4
30	50	0	−120	−250	3	4	4
50	80	0	−150	−250	4	5	5
80	120	0	−200	−380	4	5	5
120	180	0	−250	−380	5	7	6
180	250	0	−300	−500	6	8	7

1) *Only for deep groove and angular contact ball bearings.*
2) *Only for bearings manufactured specifically for use as matched pairs, with the exception of deep groove ball bearings.*

19
Tolerance class 4, outer ring

Tolerance symbols in accordance with ISO 492 ➤117|▦6

U = *upper limit deviation*

L = *lower limit deviation*

Nominal size of outside diameter D		Deviation of outside diameter $t_{\Delta Dmp}$		Deviation of a single outside diameter $t_{\Delta Ds}$		Variation t_{VDsp} [1]		t_{VDmp}	Radial runout t_{Kea}
		Diameter series							
mm		9		0, 1, 2, 3, 4		9	0, 1, 2, 3, 4	µm	µm
over	incl.	U	L	U	L	µm max.		max.	max.
–	6	0	−4	0	−4	4	3	2	3
6	18	0	−4	0	−4	4	3	2	3
18	30	0	−5	0	−5	5	4	2,5	4
30	50	0	−6	0	−6	6	5	3	5
50	80	0	−7	0	−7	7	5	3,5	5
80	120	0	−8	0	−8	8	6	4	6
120	150	0	−9	0	−9	9	7	5	7
150	180	0	−10	0	−10	10	8	5	8
180	250	0	−11	0	−11	11	8	6	10
250	315	0	−13	0	−13	13	10	7	11
315	400	0	−15	0	−15	15	11	8	13

continued ▼

[1] *No values are given for bearings with sealing shields or sealing washers.*

19
Tolerance class 4, outer ring

Nominal size of outside diameter D		Perpendicularity t_{SD} t_{SD1}	Axial runout t_{Sea} [1]	Deviation of a single outer ring width $t_{\Delta Cs}$	Variation of outer ring width t_{VCs}
mm		µm	µm	µm	µm
over	incl.	max.	max.		max.
–	6	2	5	$t_{\Delta Cs}$ is identical to $t_{\Delta Bs}$ for the inner ring of the corresponding bearing ➤130|▦18	2,5
6	18	2	5		2,5
18	30	2	5		2,5
30	50	2	5		2,5
50	80	2	5		3
80	120	2,5	6		4
120	150	2,5	7		5
150	180	2,5	8		5
180	250	3,5	10		7
250	315	4	10		7
315	400	5	13		8

continued ▲

[1] *Only for deep groove and angular contact ball bearings.*

Radial bearings, excluding tapered roller bearings

20 *Tolerance class 2, inner ring*

Tolerance symbols in accordance with ISO 492 ➤ *117* | ▦ *6*
U = *upper limit deviation*
L = *lower limit deviation*

Nominal bore diameter d		Bore deviation $t_{\Delta dmp}$		Deviation of a single bore diameter $t_{\Delta ds}$		Variation t_{Vdsp}	Variation t_{Vdmp}	Radial runout t_{Kia}
		µm		µm				
		Diameter series						
mm		9		0, 1, 2, 3, 4		µm	µm	µm
over	incl.	U	L	U	L	max.	max.	max.
–	2,5	0	−2,5	0	−2,5	2,5	1,5	1,5
2,5	10	0	−2,5	0	−2,5	2,5	1,5	1,5
10	18	0	−2,5	0	−2,5	2,5	1,5	1,5
18	30	0	−2,5	0	−2,5	2,5	1,5	2,5
30	50	0	−2,5	0	−2,5	2,5	1,5	2,5
50	80	0	−4	0	−4	4	2	2,5
80	120	0	−5	0	−5	5	2,5	2,5
120	150	0	−7	0	−7	7	3,5	2,5
150	180	0	−7	0	−7	7	3,5	5
180	250	0	−8	0	−8	8	4	5

21 *Tolerance class 2, width tolerances, inner ring*

Tolerance symbols in accordance with ISO 492 ➤ *117* | ▦ *6*
U = *upper limit deviation*
L = *lower limit deviation*

Nominal bore diameter d		Deviation of inner ring width $t_{\Delta Bs}$			Axial runout t_{Sd}	Axial runout t_{Sia} [1]	Variation of inner ring width t_{VBs}
		µm			µm	µm	µm
mm		All	Normal	Modified [2]	µm	µm	µm
over	incl.	U	L	L	max.	max.	max.
–	2,5	0	−40	−250	1,5	1,5	1,5
2,5	10	0	−40	−250	1,5	1,5	1,5
10	18	0	−80	−250	1,5	1,5	1,5
18	30	0	−120	−250	1,5	2,5	1,5
30	50	0	−120	−250	1,5	2,5	1,5
50	80	0	−150	−250	1,5	2,5	1,5
80	120	0	−200	−380	2,5	2,5	2,5
120	150	0	−250	−380	2,5	2,5	2,5
150	180	0	−250	−380	4	5	4
180	250	0	−300	−500	5	5	5

1) *Only for deep groove and angular contact ball bearings.*

2) *Only for bearings manufactured specifically for use as matched pairs, with the exception of deep groove ball bearings.*

22 Tolerance class 2, outer ring

Tolerance symbols in accordance with ISO 492 ➤117|▦6

U = *upper limit deviation*

L = *lower limit deviation*

Nominal outside diameter D		Deviation of outside diameter				Variation		Radial runout
		$t_{\Delta Dmp}$ µm		$t_{\Delta Ds}$ µm		t_{VDsp} [1]	t_{VDmp}	t_{Kea}
		Diameter series						
mm		9		0, 1, 2, 3, 4		µm	µm	µm
over	incl.	U	L	U	L	max.	max.	max.
–	6	0	−2,5	0	−2,5	2,5	1,5	1,5
6	18	0	−2,5	0	−2,5	2,5	1,5	1,5
18	30	0	−4	0	−4	4	2	2,5
30	50	0	−4	0	−4	4	2	2,5
50	80	0	−4	0	−4	4	2	4
80	120	0	−5	0	−5	5	2,5	5
120	150	0	−5	0	−5	5	2,5	5
150	180	0	−7	0	−7	7	3,5	5
180	250	0	−8	0	−8	8	4	7
250	315	0	−8	0	−8	8	4	7
315	400	0	−10	0	−10	10	5	8

continued ▼

[1] *No values are given for bearings with sealing shields or sealing washers.*

22 Tolerance class 2, outer ring

Tolerance symbols in accordance with ISO 492 ➤117|▦6

U = *upper limit deviation*

L = *lower limit deviation*

Nominal outside diameter D		Perpendicularity t_{SD} t_{SD1}	Axial runout t_{Sea} [1]	Deviation of a single outer ring width $t_{\Delta Cs}$	Variation of outer ring width t_{VCs}
mm		µm	µm	µm	µm
over	incl.	max.	max.	max.	max.
–	6	0,75	1,5	$t_{\Delta Cs}$ is identical to $t_{\Delta Bs}$ for the inner ring of the corresponding bearing ➤132|▦21	1,5
6	18	0,75	1,5		1,5
18	30	0,75	2,5		1,5
30	50	0,75	2,5		1,5
50	80	0,75	4		1,5
80	120	1,25	5		2,5
120	150	1,25	5		2,5
150	180	1,25	5		2,5
180	250	2	7		4
250	315	2,5	7		5
315	400	3,5	8		7

continued ▲

[1] *Only for deep groove and angular contact ball bearings.*

Bearings with tapered bore

23
Tolerances for tapered bores in accordance with ISO 492, taper 1:12, tolerance class Normal

Tolerance symbols in accordance with ISO 492 ➤*132*|▦*21*
U = *upper limit deviation*
L = *lower limit deviation*

Nominal bore diameter d mm		Bore deviation $t_{\Delta dmp}$ µm		Variation t_{Vdsp} [1] µm	Deviation of taper slope $t_{\Delta SL}$ µm	
over	incl.	U	L	max.	U	L
18	30	+33	0	13	+21	0
30	50	+39	0	16	+25	0
50	80	+46	0	19	+30	0
80	120	+54	0	22	+35	0
120	180	+63	0	40	+40	0
180	250	+72	0	46	+46	0
250	315	+81	0	52	+52	0
315	400	+89	0	57	+57	0
400	500	+97	0	63	+63	0
500	630	+110	0	70	+70	0
630	800	+125	0	–	+80	0
800	1 000	+140	0	–	+90	0

1) *Valid in any radial cross-section of the bore.*

24
Tolerances for tapered bores, taper 1:30, tolerance class Normal

Tolerance symbols in accordance with ISO 492 ➤*132*|▦*21*
U = *upper limit deviation*
L = *lower limit deviation*

Nominal bore diameter d mm		Bore deviation $t_{\Delta dmp}$ µm		Variation t_{Vdsp} [1] µm	Deviation of taper slope $t_{\Delta SL}$ µm	
over	incl.	U	L	max.	U	L
–	80	+15	0	19	+35	0
80	120	+20	0	25	+40	0
120	180	+25	0	31	+50	0
180	250	+30	0	38	+55	0
250	315	+35	0	44	+60	0
315	400	+40	0	50	+65	0
400	500	+45	0	56	+75	0
500	630	+50	0	63	+85	0
630	800	+75	0	–	+100	0
800	1 000	+100	0	–	+100	0

1) *Valid in any radial cross-section of the bore.*

Taper 1:12

✎ Taper 1:12 is standardised

For rolling bearings with a tapered bore, the standardised taper is 1:12. This corresponds to a half taper angle ($\alpha/2 = 2°23'9{,}4''$); basic taper angle $\alpha = 4°46'18{,}8''$. An exception is spherical roller bearings of the dimension series 40, 41 and 42 (the taper in this case is 1:30).

For the dimensions and tolerances defined in ISO 492:2014 for a tapered bore ➤*134*|▭*21*.

21
Tolerances for tapered bores

Taper 1:12
Half of taper angle
$\alpha/2 = 2°23'9{,}4''$;
theoretical large end diameter
$d_1 = d + 1/12 \cdot B$
$SL = d_1 - d = 2B \cdot \tan(\alpha/2)$
$\Delta SL = \Delta d1mp - \Delta dmp$

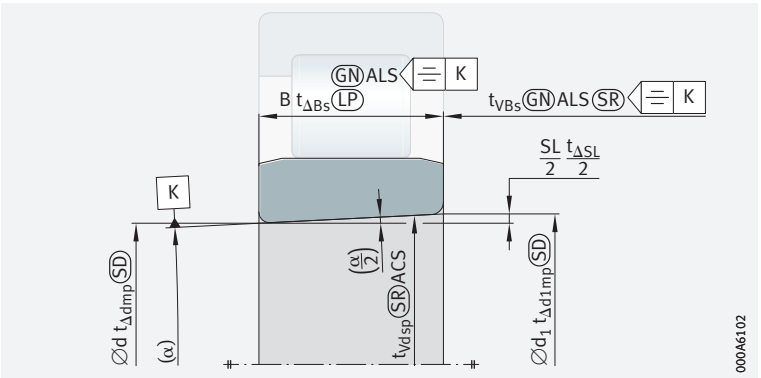

Axial bearings

25 *Bore diameter tolerances for shaft locating washers to ISO 199:2014*

Tolerance symbols in accordance with ISO 199 ➤ *122*|*7*
U = *upper limit deviation*
L = *lower limit deviation*

Nominal bore diameter d mm		Tolerance class Normal, 6 and 5			Tolerance class 4		
		Bore deviation $t_{\Delta dmp}$ µm		Variation t_{Vdsp} µm	Bore deviation $t_{\Delta dmp}$ µm		Variation t_{Vdsp} µm
over	incl.	U	L	max.	U	L	max.
–	18	0	−8	6	0	−7	5
18	30	0	−10	8	0	−8	6
30	50	0	−12	9	0	−10	8
50	80	0	−15	11	0	−12	9
80	120	0	−20	15	0	−15	11
120	180	0	−25	19	0	−18	14
180	250	0	−30	23	0	−22	17
250	315	0	−35	26	0	−25	19
315	400	0	−40	30	0	−30	23
400	500	0	−45	34	0	−35	26
500	630	0	−50	38	0	−40	30
630	800	0	−75	55	0	−50	40
800	1 000	0	−100	75	0	–	–
1 000	1 250	0	−125	95	0	–	–

26 *Outside diameter tolerances for housing locating washers to ISO 199:2014*

Tolerance symbols in accordance with ISO 199 ➤ *122*|*7*
U = *upper limit deviation*
L = *lower limit deviation*

Nominal outside diameter D mm		Tolerance class Normal, 6 and 5			Tolerance class 4		
		Deviation of outside diameter $t_{\Delta Dmp}$ µm		Variation t_{VDsp} µm	Deviation of outside diameter $t_{\Delta Dmp}$ µm		Variation t_{VDsp} µm
over	incl.	U	L	max.	U	L	max.
10	18	0	−11	8	0	−7	5
18	30	0	−13	10	0	−8	6
30	50	0	−16	12	0	−9	7
50	80	0	−19	14	0	−11	8
80	120	0	−22	17	0	−13	10
120	180	0	−25	19	0	−15	11
180	250	0	−30	23	0	−20	15
250	315	0	−35	26	0	−25	19
315	400	0	−40	30	0	−28	21
400	500	0	−45	34	0	−33	25
500	630	0	−50	38	0	−38	29
630	800	0	−75	55	0	−45	34
800	1 000	0	−100	75	0	−60	45
1 000	1 250	0	−125	95	–	–	–
1 250	1 600	0	−160	120	–	–	–

27
Variation in washer thickness for shaft and housing locating washers to ISO 199:2014

Tolerance symbols in accordance with ISO 199 ➤122|27

Nominal bore diameter d		Tolerance class				Tolerance class Normal, 6, 5, 4
		Normal	6	5	4	
		Variation in thickness between shaft washer raceway and back face t_{Si} µm				Variation in thickness between housing washer raceway and back face t_{Se} µm
mm						
over	incl.	max.				max.
–	18	10	5	3	2	Identical to t_{Si} for the shaft locating washer of the corresponding bearing
18	30	10	5	3	2	
30	50	10	6	3	2	
50	80	10	7	4	3	
80	120	15	8	4	3	
120	180	15	9	5	4	
180	250	20	10	5	4	
250	315	25	13	7	5	
315	400	30	15	7	5	
400	500	30	18	9	6	
500	630	35	21	11	7	
630	800	40	25	13	8	
800	1 000	45	30	15	–	
1 000	1 250	50	35	18	–	

Tolerances for nominal bearing height

Tolerances and symbols for nominal size

The tolerances for nominal height are given in ➤137|28.
The corresponding symbols for nominal size are shown in ➤136|22.

22
Nominal size symbols for nominal bearing height

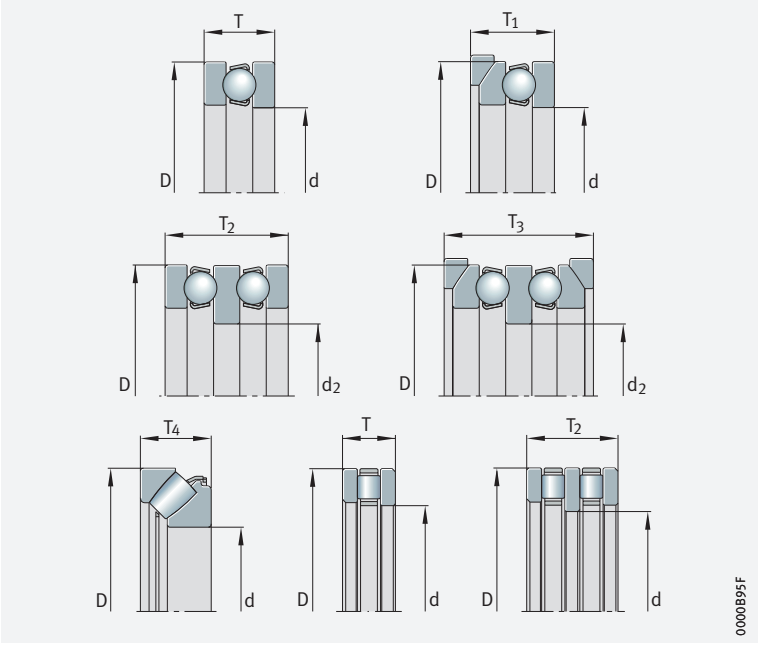

28 Tolerances for nominal bearing height

Tolerance symbols in accordance with ISO 199 ➤122|28
U = upper limit deviation
L = lower limit deviation

Nominal bore diameter d		t_{Ts}		t_{T1s}		t_{T2s}	
mm		µm		µm		µm	
over	incl.	U	L	U	L	U	L
–	30	20	−250	100	−250	150	−400
30	50	20	−250	100	−250	150	−400
50	80	20	−300	100	−300	150	−500
80	120	25	−300	150	−300	200	−500
120	180	25	−400	150	−400	200	−600
180	250	30	−400	150	−400	250	−600
250	315	40	−400	200	−400	350	−700
315	400	40	−500	200	−500	350	−700
400	500	50	−500	300	−500	400	−900
500	630	60	−600	350	−600	500	−1 100
630	800	70	−750	400	−750	600	−1 300
800	1 000	80	−1 000	450	−1 000	700	−1 500
1 000	1 250	100	−1 400	500	−1 400	900	−1 800

continued ▼

28 Tolerances for nominal bearing height

Tolerance symbols in accordance with ISO 199 ➤122|28
U = upper limit deviation
L = lower limit deviation

Nominal bore diameter d		t_{T3s}		t_{T4s}	
mm		µm		µm	
over	incl.	U	L	U	L
–	30	300	−400	20	−300
30	50	300	−400	20	−300
50	80	300	−500	20	−400
80	120	400	−500	25	−400
120	180	400	−600	25	−500
180	250	500	−600	30	−500
250	315	600	−700	40	−700
315	400	600	−700	40	−700
400	500	750	−900	50	−900
500	630	900	−1 100	60	−1 200
630	800	1 100	−1 300	70	−1 400
800	1 000	1 300	−1 500	80	−1 800
1 000	1 250	1 600	−1 800	100	−2 400

continued ▲

7.11 Chamfer dimensions

Radial bearings, excluding tapered roller bearings

Minimum and maximum values

The minimum and maximum values for the bearings are given in the table Limit values for chamfer dimensions to DIN 620-6 ➤138|29, ➤138|23.

For drawn cup needle roller bearings with open ends HK, drawn cup needle roller bearings with closed end BK and aligning needle roller bearings PNA and RPNA, the chamfer dimensions deviate from DIN 620-6. The lower limit values for r are given in the product tables.

Tapered roller bearings

Chamfer dimensions for tapered roller bearings ➤139|24 and ➤139|30, for axial bearings ➤140|25 and ➤140|31.

23

Chamfer dimensions for radial bearings (not including tapered roller bearings)

① *Symmetrical ring cross-section with identical chamfers on both rings*
② *Symmetrical ring cross-section with different chamfers on both rings*
③ *Asymmetrical ring cross-section*
④ *Annular slot on outer ring, bearing with rib washer*
⑤ *L-section ring*

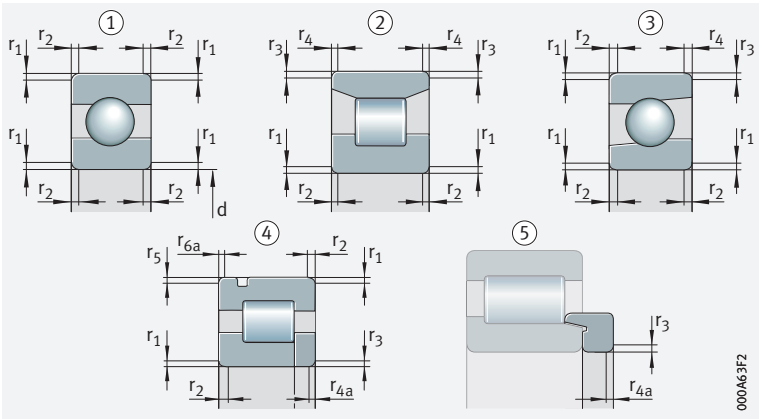

29

Limit values for chamfer dimensions to DIN 620-6

r[1] mm	d mm		r_1 to r_{6a} mm	r_1, r_3, r_5 mm	r_2, r_4, r_6[2] mm	r_{4a}, r_{6a} mm
	over	incl.	min.	max.	max.	max.
0,05	–	–	0,05	0,1	0,2	0,1
0,08	–	–	0,08	0,16	0,3	0,16
0,1	–	–	0,1	0,2	0,4	0,2
0,15	–	–	0,15	0,3	0,6	0,3
0,2	–	–	0,2	0,5	0,8	0,5
0,3	–	40	0,3	0,6	1	0,8
	40	–	0,3	0,8	1	0,8
0,5	–	40	0,5	1	2	1,5
	40	–	0,5	1,3	2	1,5
0,6	–	40	0,6	1	2	1,5
	40	–	0,6	1,3	2	1,5
1	–	50	1	1,5	3	2,2
	50	–	1	1,9	3	2,2
1,1	–	120	1,1	2	3,5	2,7
	120	–	1,1	2,5	4	2,7
1,5	–	120	1,5	2,3	4	3,5
	120	–	1,5	3	5	3,5
2	–	80	2	3	4,5	4
	80	220	2	3,5	5	4
	220	–	2	3,8	6	4
2,1	–	280	2,1	4	6,5	4,5
	280	–	2,1	4,5	7	4,5
2,5	–	100	2,5	3,8	6	5
	100	280	2,5	4,5	6	5
	280	–	2,5	5	7	5
3	–	280	3	5	8	5,5
	280	–	3	5,5	8	5,5
4	–	–	4	6,5	9	6,5
5	–	–	5	8	10	8
6	–	–	6	10	13	10
7,5	–	–	7,5	12,5	17	12,5
9,5	–	–	9,5	15	19	15
12	–	–	12	18	24	18
15	–	–	15	21	30	21
19	–	–	19	25	38	25

1) *The nominal chamfer dimension r is identical to the smallest permissible chamfer dimension r_{min}.*
2) *For bearings with a width of 2 mm or less, the values for r_1 apply.*

Tapered roller bearings

Minimum and maximum values

Minimum and maximum values for metric tapered roller bearings ➤139 | 24 and ➤139 | 30.

24
Chamfer dimensions for metric tapered roller bearings

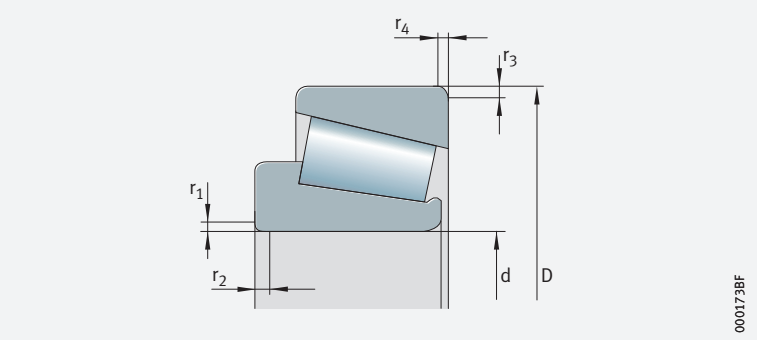

30
Limit values for chamfer dimensions

r[1] mm	d, D mm		r_1 to r_4 mm	r_1, r_3 mm	r_2, r_4 mm
	over	incl.	min.	max.	max.
0,3	–	40	0,3	0,7	1,4
	40	–	0,3	0,9	1,6
0,6	–	40	0,6	1,1	1,7
	40	–	0,6	1,3	2
1	–	50	1	1,6	2,5
	50	–	1	1,9	3
1,5	–	120	1,5	2,3	3
	120	250	1,5	2,8	3,5
	250	–	1,5	3,5	4
2	–	120	2	2,8	4
	120	250	2	3,5	4,5
	250	–	2	4	5
2,5	–	120	2,5	3,5	5
	120	250	2,5	4	5,5
	250	–	2,5	4,5	6
3	–	120	3	4	5,5
	120	250	3	4,5	6,5
	250	400	3	5	7
	400	–	3	5,5	7,5
4	–	120	4	5	7
	120	250	4	5,5	7,5
	250	400	4	6	8
	400	–	4	6,5	8,5
5	–	180	5	6,5	8
	180	–	5	7,5	9
6	–	180	6	7,5	10
	180	–	6	9	11

[1] *The nominal chamfer dimension r is identical to the smallest permissible chamfer dimension r_{min}.*

Axial bearings

Minimum and maximum values

Minimum and maximum values for the bearings ➤ *140*| *25* and ➤ *140*| *31*. The values in the table correspond to DIN 620-6.
In the case of axial deep groove ball bearings, the tolerances for the chamfer dimensions are identical in both axial and radial directions.

25
Chamfer dimensions for axial bearings

① *Single direction axial deep groove ball bearing with flat housing locating washer*
② *Double direction axial deep groove ball bearing with spherical housing locating washers and seating washers*
③ *Single direction axial cylindrical roller bearing*
④ *Single direction axial spherical roller bearing*

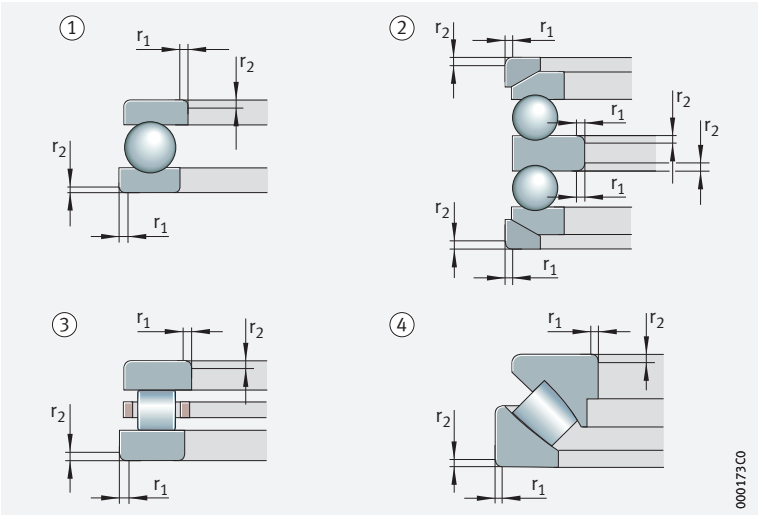

31
Limit values for chamfer dimensions

r[1)] mm	r_1, r_2 mm min.	mm max.
0,05	0,05	0,1
0,08	0,08	0,16
0,1	0,1	0,2
0,15	0,15	0,3
0,2	0,2	0,5
0,3	0,3	0,8
0,6	0,6	1,5
1	1	2,2
1,1	1,1	2,7
1,5	1,5	3,5
2	2	4
2,1	2,1	4,5
3	3	5,5
4	4	6,5
5	5	8
6	6	10
7,5	7,5	12,5
9,5	9,5	15
12	12	18
15	15	21
19	19	25

1) *The nominal chamfer dimension r is identical to the smallest permissible chamfer dimension r_{min}.*

8 Design of bearing arrangements

8.1 Arrangement of bearings

Support of a shaft normally requires two bearings

The guidance and support of a rotating machine part generally requires at least two bearings arranged at a certain distance from each other (exceptions: four point contact, crossed roller and slewing bearings). Depending on the application, a decision is made between a locating/non-locating bearing arrangement, an adjusted bearing arrangement and a floating bearing arrangement.

Locating/non-locating bearing arrangement

The non-locating bearing compensates for differences in distance

On a shaft supported by two radial bearings, the distances between the bearing seats on the shaft and in the housing frequently do not coincide as a result of manufacturing tolerances. The distances may also change as a result of temperature increases during operation. These differences in distance are compensated in the non-locating bearing. Examples of locating/non-locating bearing arrangements ➤ *142* | *1*.

Non-locating bearings

Suitable non-locating bearings

Ideal non-locating bearings are cylindrical roller bearings with cage of series N and NU or needle roller bearings. In these bearings, the roller and cage assembly can be displaced on the raceway of the bearing ring without ribs. All other bearing types, for example deep groove ball bearings and spherical roller bearings, can only act as non-locating bearings if one bearing ring has a fit that allows displacement. The bearing ring subjected to point load therefore has a loose fit; this is normally the outer ring.

Locating bearings

The locating bearing guides the shaft in an axial direction and supports external axial forces. In order to prevent axial bracing, shafts with more than two bearings have only one locating bearing. The type of bearing selected as a locating bearing depends on the magnitude of the axial forces and the accuracy with which the shafts must be axially guided.

Suitable locating bearings

A double row angular contact ball bearing, for example, will give closer axial guidance than a deep groove ball bearing or a spherical roller bearing. A pair of symmetrically arranged angular contact ball bearings or tapered roller bearings used as locating bearings will also provide extremely close axial guidance.

There are particular advantages in using angular contact ball bearings of the universal design. The bearings can be fitted in pairs in any O or X arrangement without shims. Angular contact ball bearings of the universal design are matched so that, in an X or O arrangement, they have a low axial internal clearance (design UA), zero clearance (UO) or slight preload (UL).

In gearboxes, a four point contact bearing is sometimes fitted directly adjacent to a cylindrical roller bearing to give a locating bearing arrangement. The four point contact bearing, without radial support of the outer ring, can only support axial forces. The radial force is supported by the cylindrical roller bearing.

If a lower axial force is present, a cylindrical roller bearing with cage of series NUP can also be used as a locating bearing.

No adjustment or setting work with matched pairs of tapered roller bearings

Fitting is also made easier when using matched pairs of tapered roller bearings as locating bearings (313..-DF). They are matched with appropriate axial internal clearance so that no adjustment or setting work is required.

1
Locating/non-locating bearing arrangements

⟺ = non-locating bearing

① *Locating bearing:*
deep groove ball bearing
Non-locating bearing:
deep groove ball bearing

② *Locating bearing:*
spherical roller bearing
Non-locating bearing:
spherical roller bearing

③ *Locating bearing:*
deep groove ball bearing
Non-locating bearing:
cylindrical roller bearing NU

④ *Locating bearing:*
double row angular contact ball bearing
Locating bearing:
cylindrical roller bearing NU

⑤ *Locating bearing:*
four point contact bearing and cylindrical roller bearing NU (outer ring of four point contact bearing not radially retained)
Non-locating bearing:
cylindrical roller bearing NU

⑥ *Locating bearing:*
tapered roller bearing
Non-locating bearing:
cylindrical roller bearing NU

⑦ *Locating bearing:*
cylindrical roller bearing NUP
Non-locating bearing:
cylindrical roller bearing NU

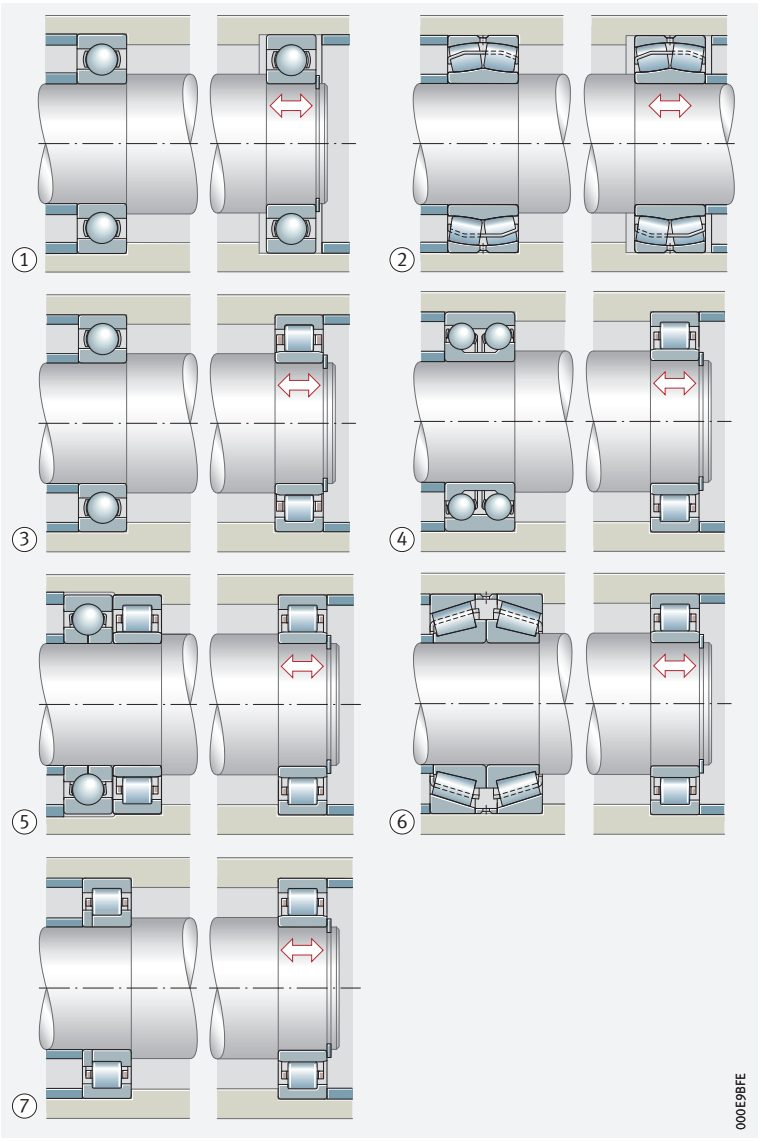

Adjusted bearing arrangement

The "adjustment" process

An adjusted bearing arrangement is generally constructed from two angular contact bearings (angular contact ball bearings, tapered roller bearings) in a mirror image arrangement ➤143| 2 and ➤143| 3. The inner and outer rings of the bearings are displaced relative to each other until the required clearance or the required preload is achieved. This process is known as "adjustment".

Angular contact bearings and deep groove ball bearings suitable for adjusted bearing arrangements

Angular contact bearings support radial and axial forces

Angular contact bearings support forces comprising a radial and an axial component. These are thus a combination of a radial and an axial bearing. Depending on the size of the nominal contact angle α, angular contact bearings are classified as radial or axial bearings.

✎ *Deep groove ball bearings are also suitable*

For an adjusted bearing arrangement, deep groove ball bearings can also be used; these then act as angular contact ball bearings with a small nominal contact angle.

Due to the possibility of regulating the clearance, adjusted bearing arrangements are particularly suitable if close guidance is necessary.

O or X arrangement

✎ *Two arrangements*

In an adjusted bearing arrangement, an O or X arrangement of the bearings is essentially possible.

✎ *The contact cone apexes point outwards or inwards*

In the O arrangement, the cones and their apexes formed by the contact lines (the contact cone apexes S) point outwards, in the X arrangement, the cones point inwards ➤ *143* | 2.

In angular contact ball bearings and tapered roller bearings, the contact lines of the rolling element forces coincide at the contact cone apexes S ➤ *143* | 2 and ➤ *143* | 3. In adjusted bearing arrangements, the bearing spacing is therefore defined as the spacing of the contact cone apexes.

✎ *The support spacing is larger in an O arrangement*

The resulting support spacing H is larger in an O arrangement than in an X arrangement. An O arrangement should be used in preference if the component with small bearing spacing must be guided with the smallest possible tilting clearance or tilting forces must be supported.

2
Adjusted bearing arrangement with angular contact ball bearings

S = *contact cone apex*
H = *support spacing*
① *O arrangement*
② *X arrangement*

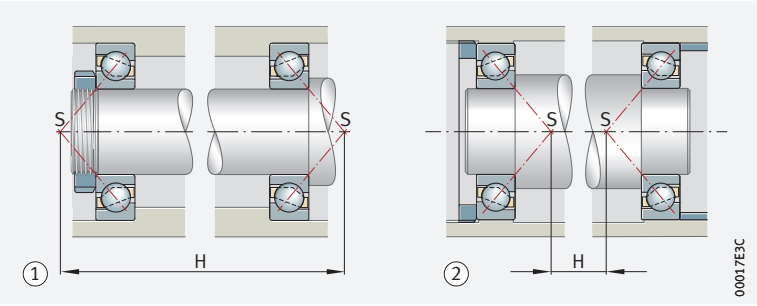

Influence of thermal expansion in O and X arrangements

When deciding between an O and X arrangement, attention must also be paid to the temperature conditions and thermal expansions. This is based on the position of the roller cone apexes R. The roller cone apex R represents the intersection point of the extended, inclined outer ring raceway with the bearing axis ➤ *143* | 3.

✎ *X arrangement*

If the shaft is warmer than the housing ($T_W > T_G$), the shaft expands more than the housing in an axial and radial direction. As a result, the clearance set in an X arrangement decreases in every case (assuming the following precondition: shaft and housing of same material).

3
Adjusted bearing arrangement with tapered roller bearings

X arrangement

R = *roller cone apex*
S = *contact cone apex*

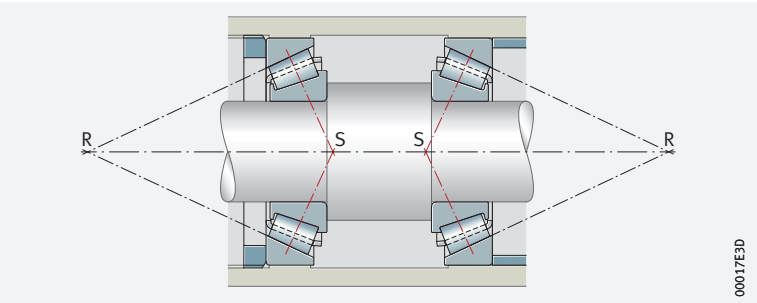

Temperature behaviour and thermal expansion in an O arrangement

The behaviour is different in an O arrangement. A distinction must be drawn between three cases here:

- If the roller cone apexes R coincide at a point, the axial and radial thermal expansion cancel each other out and the clearance set is maintained ➤ *144*|*4*
- If the roller cones overlap with a small bearing spacing, the radial expansion has a stronger effect than the axial expansion on the bearing clearance ➤ *144*|*5*: the axial clearance is reduced. This must be taken into consideration in the adjustment of bearings
- In the third case, the roller cones do not overlap with a large bearing spacing ➤ *144*|*6*. The radial expansion then has a weaker effect than the axial expansion on the bearing clearance: the axial clearance is increased

4
Adjusted bearings in an O arrangement, the roller cone apexes coincide

R = *roller cone apex*
S = *contact cone apex*

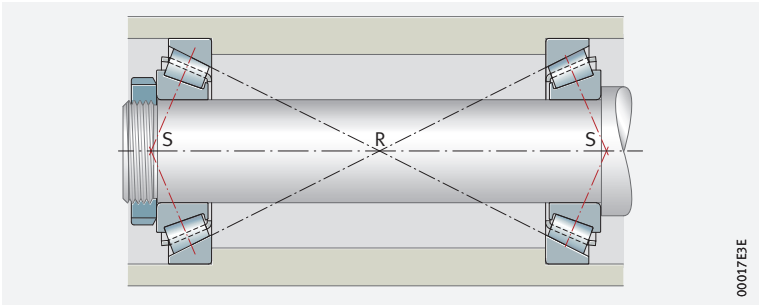

5
Adjusted bearings in an O arrangement, the roller cone apexes overlap

R = *roller cone apex*
S = *contact cone apex*

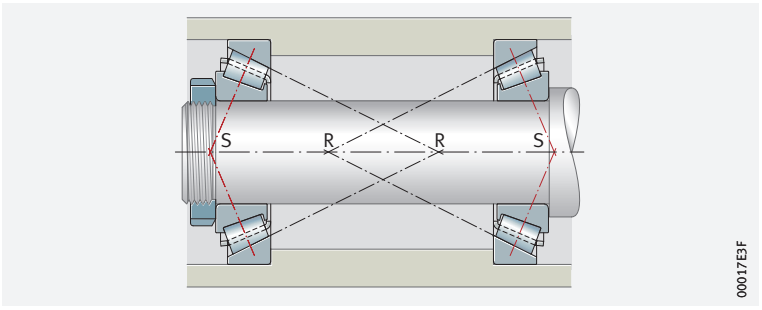

6
Adjusted bearings in an O arrangement, the roller cone apexes do not overlap

R = *roller cone apex*
S = *contact cone apex*

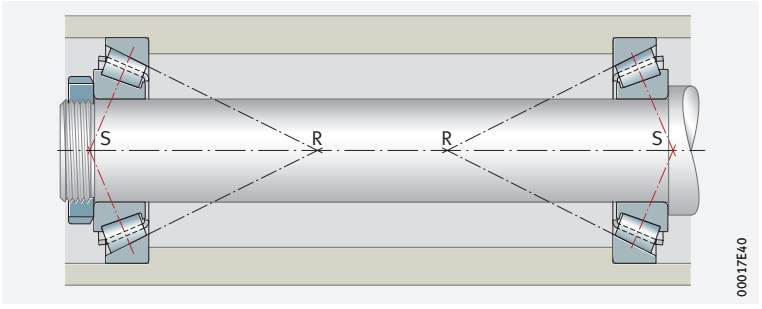

Sliding seat only permissible on the bearing ring with point load

Sliding seat in the bearing ring to be adjusted

Whether the inner ring or outer ring is adjusted depends on the degree of accessibility of the adjustment elements, such as nuts and covers. Since the bearing ring to be adjusted must be easily displaced, attention must also be paid in these considerations to the fits of the bearing rings.

A sliding seat should fundamentally only be permitted on the ring that is subject to point load.

Elastic adjustment

Preloading using springs

Adjusted bearing arrangements can also be achieved by preloading using springs ➤ 145 | 7. This elastic adjustment method compensates for thermal expansion. It can also be used where bearing arrangements are at risk of vibration while stationary.

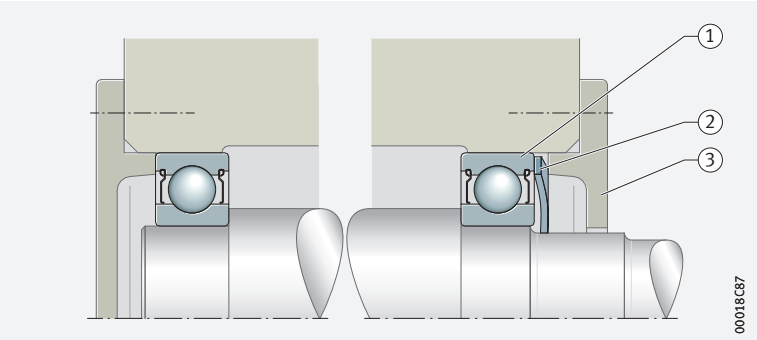

7
Bearing arrangement adjusted by means of spring washer

① *Deep groove ball bearing*
② *Spring washer (spring preload)*
③ *Cover*

Floating bearing arrangement

Difference from the adjusted bearing arrangement: this does not give close axial guidance

The floating bearing arrangement is essentially similar in its arrangement to the adjusted bearing arrangement. While freedom from clearance or even preload is desirable when warm from operation in the latter case, floating bearing arrangements always have an axial clearance s of several tenths of a millimetre depending on the bearing size ➤ 145 | 8. The value s is defined as a function of the required guidance accuracy such that the bearings are not axially stressed even under unfavourable thermal conditions.

Suitable bearing types

A floating bearing arrangement is suitable for bearings that must not be adjusted

For a floating bearing arrangement, almost all bearing types can be considered that must not be adjusted; examples ➤ 145 | 8. Floating arrangements are thus possible with, for example, deep groove ball bearings, self-aligning ball bearings and spherical roller bearings; one ring of each of the two bearings (usually the outer ring) then has a sliding seat. In the floating bearing arrangement with cylindrical roller bearings NJ, length compensation is possible within the bearing.

Tapered roller bearings and angular contact ball bearings are not generally suitable for a floating bearing arrangement with large axial clearance.

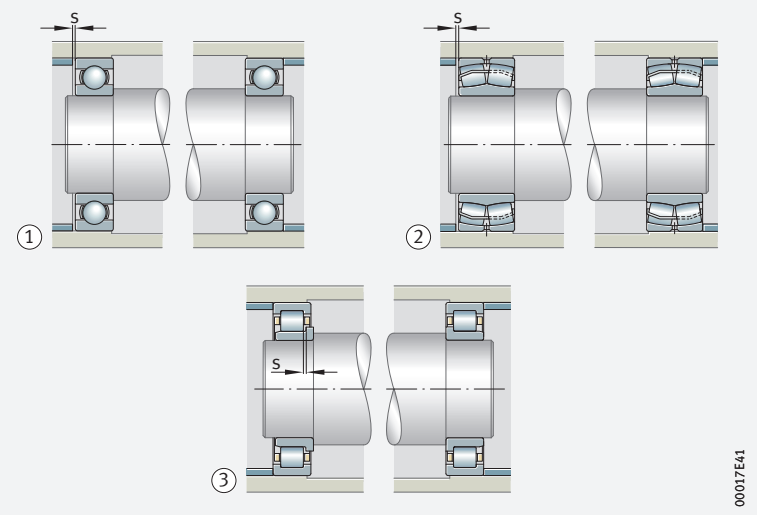

8
Floating bearing arrangements

s = *axial displacement distance (axial clearance)*

① *Deep groove ball bearing*
② *Spherical roller bearing*
③ *Cylindrical roller bearing NJ*

8.2 Radial location of bearings

Location of the bearing rings in a radial and tangential direction by fit, in an axial direction by form fit

Rolling bearings must be located on the shaft and in the housing in a radial, axial and tangential direction in accordance with their function. In a radial and tangential direction, this occurs by means of a tight fit. However, this is only possible under certain conditions in an axial direction, therefore rolling bearings are generally axially located by means of form fit.

Criteria for selection of fits

Points to be observed in the selection of fits

The following must be taken into consideration in determining the fit:

- The rolling bearing rings must be well supported over their entire circumference in order to allow full utilisation of the load carrying capacity of the bearing
- The rings must not creep on their mating parts, otherwise the seating surfaces will be damaged
- The non-locating bearing must compensate changes in the length of the shaft and housing and one ring must therefore be axially adjustable
- Mounting and dismounting of the bearings should be possible without a large amount of work

Interference fits

Interference fits lead to expansion of the inner ring raceway and contraction of the outer ring raceway. The resulting stresses occurring in the rings and the reduction in the radial internal clearance must be taken into consideration in the selection of the fit; see ➤*148* and ➤*151*.

Tight fit necessary

Good support of the bearing rings on their circumference requires rigid seating. The requirement that rings must not creep on their mating parts also requires firm seating. If non-separable bearings must be mounted and dismounted, a tight fit can only be achieved for one bearing ring.
In the case of cylindrical roller bearings N, NU and needle roller bearings, both rings can have tight fits, since the length compensation takes place within the bearing and since the rings can be mounted separately.
With tight fits and a temperature differential between the inner and outer ring, the radial internal clearance of the bearing is reduced. This must be taken into consideration when selecting the radial internal clearance.

Materials other than cast iron or steel

If materials other than cast iron or steel are used for the adjacent construction, the modulus of elasticity and the differing coefficients of thermal expansion of the materials must also be be taken into consideration to achieve rigid seating. For aluminium housings, thin-walled housings and hollow shafts, a closer fit should be selected if necessary in order to achieve the same force locking as with cast iron, steel or solid shafts.

Higher loads

Higher loads, especially shocks, require a fit with larger interference and narrower geometrical tolerances.

Bearing seat for axial bearings

Axial bearings, which support axial loads only, must not be guided radially (with the exception of axial cylindrical roller bearings which have a degree of freedom in the radial direction due to flat raceways). In the case of groove-shaped raceways this is not present and must be achieved by a loose seat for the stationary washer. A rigid seat is normally selected for the rotating washer.

Where axial bearings also support radial forces, such as in axial spherical roller bearings, fits should be selected in the same way as for radial bearings.

Contact surfaces of the mating parts

The contact surfaces of the mating parts must be perpendicular to the axis of rotation (total axial runout tolerance to IT5 or better), in order to ensure uniform load distribution over all the rolling elements.

Conditions of rotation

Point or circumferential load

The conditions of rotation indicate the motion of one bearing ring with respect to the load direction and are expressed as either circumferential load or point load ➤ 147 | 1.

For point load, a loose fit is also possible

If the bearing ring is stationary relative to the load direction (point load on the ring), no forces occur that could cause creep of the ring. A tight fit would be desirable here in order to give better support, but a loose fit is also possible since there is no risk that the ring will undergo creep. There is essentially a risk, however, that fretting corrosion will occur.

For circumferential load, a firm bearing seat is necessary

A bearing ring that rotates relative to the load direction (circumferential load on the ring) will roll on its seat if a loose fit is present and will thus creep in a circumferential direction. If shock type load is present, the ring will slip. In both cases, there is a risk that the seats of the ring and mating part will be damaged by fretting corrosion and wear.

The possible creep or slippage of a bearing ring can only be effectively prevented by a firm bearing seat.

1 *Differentiation between point load and circumferential load*

Condition of rotation	Example	Schematic	Load case	Fit
Rotating inner ring, stationary outer ring Constant load direction	Shaft with weight load	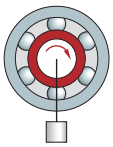	Circumferential load on inner ring and point load on outer ring	Inner ring: tight fit necessary Outer ring: loose fit permissible
Stationary inner ring, rotating outer ring Load direction rotates with outer ring	Hub bearing arrangement with significant imbalance	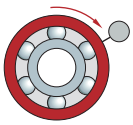		
Stationary inner ring, rotating outer ring Constant load direction	Passenger car front wheel track roller (hub bearing arrangement)	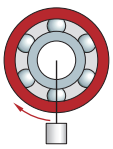	Point load on inner ring and circumferential load on outer ring	Inner ring: loose fit permissible Outer ring: tight fit necessary
Rotating inner ring, stationary outer ring Load direction rotates with inner ring	Centrifuge, vibrating screen	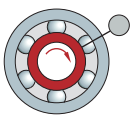		

8.3 Recommended fits

Shaft and housing tolerances

ISO tolerance classes

The tolerances are defined in the form of ISO tolerance classes to ISO 286-1 and ISO 286-2. The designation of the tolerance classes, e.g. “E8”, comprises one or two upper case letters for housings or lower case letters for shafts (= fundamental deviation identifier, which defines the tolerance position relative to the zero line, e.g. “E”) and the grade number of the standard tolerance grade (this defines the tolerance quality, e.g. “8”). A schematic illustration of the most common rolling bearing fits is shown in ➤ *148* | *9*.

9
Shaft and housing fits for rolling bearings

D = *nominal bearing outside diameter*
d = *nominal bearing bore diameter*
$t_{\Delta Dmp}$ = *deviation of mean bearing outside diameter (in accordance with ISO 492)*
$t_{\Delta dmp}$ = *deviation of mean bearing bore diameter (in accordance with ISO 492)*

① *Zero line*
② *Housing*
③ *Shaft*
④ *Clearance fit*
⑤ *Transition fit*
⑥ *Interference fit*

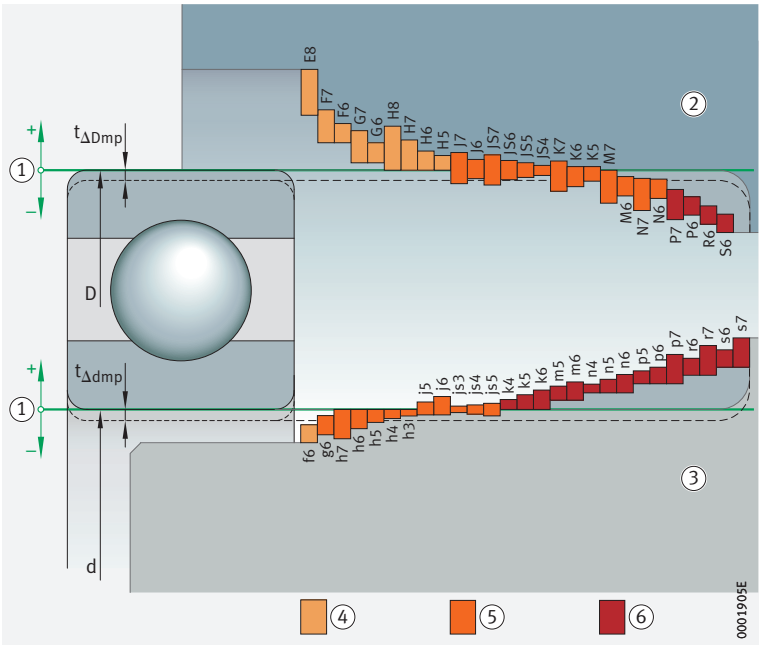

Recommendations for shaft and housing tolerances

The tables ➤ *149* | ▦ *2* to ➤ *150* | ▦ *5* contain recommendations for the selection of shaft and housing tolerances that are valid for normal mounting and operating conditions. Deviations are possible if particular requirements apply, for example in relation to running accuracy, smooth running or operating temperature. Increased running accuracies thus require closer tolerances such as standard tolerance grade 5 instead of 6. If the inner ring is warmer than the shaft during operation, the seating may loosen to an impermissible extent. A tighter fit must then be selected, for example m6 instead of k6.

Objective: the best overall solution

In some applications, the question of fits can only be resolved by a compromise. The individual requirements must be weighed against each other and those selected that give the best overall solution.

Principle of recommended fits

The principle of recommended fits relates to the risk of co-rotating (creeping) rings. The local expansion in the ring below the rolling contact, which is proportional to the Hertzian pressure, is the decisive factor here. The measure for Hertzian pressure at catalogue calculation level is C_0/P_0. This applies regardless of whether the bearing is subjected to static or dynamic load.



2
Tolerance classes for cylindrical shaft seats (radial bearings)

Condition of rotation[1]	Bearing type	Shaft diameter mm over	Shaft diameter mm incl.	Displacement facility Load	Tolerance class[2] of shaft
Point load on inner ring	Ball bearings, roller bearings	All sizes		Inner ring easily displaced	g6 (g5)
				Inner ring not easily displaced, angular contact ball bearings and tapered roller bearings with adjusted inner ring	h6 (j6)
	Needle roller bearings			Non-locating bearing	h6 (g6)[3]
Circumferential load on inner ring or indeterminate load direction	Ball bearings	–	50	Normal loads[4]	j6 (j5)
		50	100	Low loads[5]	j6 (j5)
				Normal and high loads[6]	k6 (k5)
		100	200	Low loads[4]	k6 (m6)
				Normal and high loads[7]	m6 (m5)
		200	–	Low loads	m6 (m5)
				Normal and high loads	n6 (n5)
	Roller bearings	–	60	Low loads	j6 (j5)
				Normal and high loads	k6 (k5)
		60	200	Low loads	k6 (k5)
				Normal loads	m6 (m5)
				High loads	n6 (n5)
		200	500	Normal loads	m6 (n6)
				High loads, shocks	p6
		500	–	Normal loads	n6 (p6)
				High loads	p6
	Needle roller bearings	–	50	Low loads	k6
				Normal and high loads	m6
		50	120	Low loads	m6
				Normal and high loads	n6
		120	250	Low loads	n6
				Normal and high loads	p6
		250	400	Low loads	p6
				Normal and high loads	r6
		400	500	Low loads	r6
				Normal and high loads	s6
		500	–	Low loads	r6
				Normal and high loads	s6

1) *Condition of rotation* ➤ *147* | *1.*
2) *The envelope requirement* Ⓔ ➤ *170* | *11 applies.*
3) *For easy fitting.*
4) $C_0/P_0 > 10$.
5) $C_0/P_0 > 12$.
6) $C_0/P_0 < 12$.
7) $C_0/P_0 < 10$.

3
Tolerance classes for cylindrical shaft seats (axial bearings)

Load	Bearing type	Shaft diameter mm over	Shaft diameter mm incl.	Operating conditions	Tolerance class[1] of shaft
Axial load	Axial deep groove ball bearings	All sizes		–	j6
	Axial deep groove ball bearings, double direction			–	k6
	Axial cylindrical roller bearings with shaft locating washer			–	h8
	Axial cylindrical roller and cage assemblies			–	h8
Combined load	Axial spherical roller bearings	All sizes		Point load on shaft locating washer	j6
		–	200	Circumferential load on shaft locating washer	j6 (k6)
		200	–		k6 (m6)

1) *The envelope requirement* Ⓔ ➤ *170* | *11 applies.*

4 Tolerance classes for bearing seats in housings (radial bearings)

Condition of rotation[1]	Displacement facility Load	Operating conditions	Tolerance class[2] of bore
Point load on outer ring	Outer ring easily displaced, housing unsplit	The tolerance grade is determined by the running accuracy required	H7 (H6)[3]
	Outer ring easily displaced, housing split		H8 (H7)
	Outer ring not easily displaced, housing unsplit	High running accuracy required	H6 (J6)
	Outer ring not easily displaced, angular contact ball bearings and tapered roller bearings with adjusted outer ring, housing split	Normal running accuracy	H7 (J7)
	Outer ring easily displaced	Heat input via shaft	G7[4]
Circumferential load on outer ring or indeterminate load direction	Low loads, outer ring cannot be displaced	High requirements for running accuracy: K6, M6, N6 and P6	K7 (K6)
	Normal loads, shocks, outer ring cannot be displaced		M7 (M6)
	High loads, shocks ($C_0/P_0 < 6$), outer ring cannot be displaced		N7 (N6)
	High loads, severe shocks, thin-walled housing, outer ring cannot be displaced		P7 (P6)

1) *Condition of rotation* ➤ *147* | ▦ *1.*

2) *The envelope requirement* Ⓔ ➤ *170* | ⧉ *11 applies.*

3) *G7 for housings made from flake graphite cast iron, with bearing outside diameter D > 250 mm and temperature differential between outer ring and housing > 10 K.*

4) *F7 for housings made from flake graphite cast iron, with bearing outside diameter D > 250 mm and temperature differential between outer ring and housing > 10 K.*

5 Tolerance classes for bearing seats in housings (axial bearings)

Load	Bearing type	Operating conditions	Tolerance class[1] of bore
Axial load	Axial deep groove ball bearings	Normal running accuracy	E8
		High running accuracy	H6
	Axial cylindrical roller bearings with housing locating washer	–	H9
	Axial cylindrical roller and cage assemblies	–	H10
	Axial spherical roller bearings	Normal loads	E8
		High loads	G7
Combined loads, point load on housing locating washer		–	H7
Combined loads, circumferential load on housing locating washer		–	K7

1) *The envelope requirement* Ⓔ ➤ *170* | ⧉ *11 applies.*

8.4 Tables of fits

✎ *Clearance, transition and interference fits for shafts and housing bores*

Machining tolerances for shafts and housing bores are shown in ➤*148*|*9*, ➤*152*|*6* and ➤*160*|*7*. The values are valid for solid steel shafts and flake graphite cast iron housings. In the table header, below the nominal diameters, are the normal tolerances for the bore or outside diameter of radial bearings (excluding tapered roller bearings). Below these are the deviations for the most important tolerance classes for mounting of rolling bearings.

✎ *Example for shaft fit, tolerance class j5*

For the shaft ∅ 40 j5 Ⓔ, ➤*152*|*6* gives an example of how to read the numerical values.

✎ *Example for housing fit, tolerance class K6*

For the housing bore ∅ 100 K6 Ⓔ, ➤*160*|*7* gives an example explaining the group of numbers.

6 Shaft fits

		Nominal shaft diameter in mm											
		over	**3**		**6**		**10**		**18**		**30**		**50**	
		incl.	**6**		**10**		**18**		**30**		**50**		**65**	
		Deviations of bearing bore diameter in µm (tolerance class Normal)												
		$t_{\Delta dmp}$	0	−8	0	−8	0	−8	0	−10	0	−12	0	−15
		Shaft deviation, fit interference or fit clearance in µm												
Clearance fit	**f6**	−10	−18	2	7	18	−13	−22	5	11	22	−16	−27	8	15	27	−20	−33	10	17	33	−25	−41	13	22	41	−30	−49	15	26	49
Transition fit	**g5**	−4	−9	**4**	**0**	9	−5	−11	**3**	2	11	−6	−14	**2**	3	14	−7	−16	**3**	3	16	−9	−20	**3**	5	20	−10	−23	**5**	4	23
	g6	−4	−12	**4**	1	12	−5	−14	**3**	3	14	−6	−17	**2**	4	17	−7	−20	**3**	5	20	−9	−25	**3**	6	25	−10	−29	**5**	6	29
	h5	0	−5	**8**	**4**	5	0	−6	**8**	**3**	6	0	−8	**8**	**3**	8	0	−9	**10**	**4**	9	0	−11	**12**	**4**	11	0	−13	**15**	**6**	13
	h6	0	−8	**8**	**3**	8	0	−9	**8**	**2**	9	0	−11	**8**	**2**	11	0	−13	**10**	**2**	13	0	−16	**12**	**3**	16	0	−19	**15**	**4**	19
	j5	+3	−2	**11**	**7**	2	+4	−2	**12**	**7**	2	+5	−3	**13**	**8**	3	+5	−4	**15**	**9**	4	+6	−5	**18**	**10**	5	+6	−7	**21**	**12**	7
	j6	+6	−2	**14**	**8**	2	+7	−2	**15**	**9**	2	+8	−3	**16**	**10**	3	+9	−4	**19**	**11**	4	+11	−5	**23**	**14**	5	+12	−7	**27**	**16**	7
	js5	+2,5	−2,5	**11**	**6**	3	+3	−3	**11**	**6**	3	+4	−4	**12**	**6**	4	+4,5	−4,5	**15**	**9**	5	+5,5	−5,5	**18**	**10**	6	+6,5	−6,5	**22**	**13**	7
	js6	+4	−4	**12**	**7**	4	+4,5	−4,5	**13**	**7**	5	+5,5	−5,5	**14**	**8**	6	+6,5	−6,5	**17**	**9**	7	+8	−8	**20**	**11**	8	+9,5	−9,5	**25**	**13**	10
Interference fit	**k5**	+6	+1	**14**	**9**	**1**	+7	+1	**15**	**10**	**1**	+9	+1	**17**	**12**	**1**	+11	+2	**21**	**15**	**2**	+13	+2	**25**	**17**	**2**	+15	+2	**30**	**21**	**2**
	k6	+9	+1	**17**	**11**	**1**	+10	+1	**18**	**12**	**1**	+12	+1	**20**	**14**	**1**	+15	+2	**25**	**17**	**2**	+18	+2	**30**	**21**	**2**	+21	+2	**36**	**25**	**2**
	m5	+9	+4	**17**	**13**	**4**	+12	+6	**20**	**15**	**6**	+15	+7	**23**	**18**	**7**	+17	+8	**27**	**21**	**8**	+20	+9	**32**	**24**	**9**	+24	+11	**39**	**30**	**11**
	m6	+12	+4	**20**	**15**	**4**	+15	+6	**23**	**17**	**6**	+18	+7	**26**	**20**	**7**	+21	+8	**31**	**23**	**8**	+25	+9	**37**	**27**	**9**	+30	+11	**45**	**34**	**11**

Example: shaft ∅ 40 j5 Ⓔ

Maximum material value	+6	**18**	Interference or fit clearance if the maximum material values are combined.
		10	Probable interference or fit clearance.
Minimum material value	−5	5	Interference or fit clearance if the minimum material values are combined.

Values **in bold type** in the group of three indicate fit interference, values in normal type indicate fit clearance.

	65 80		80 100		100 120		120 140		140 160		160 180		180 200		200 220		220 250	
	0 −15		0 −20		0 −20		0 −25		0 −25		0 −25		0 −30		0 −30		0 −30	
−30 −49	15 26 49		−36 −58	16 30 58	−36 −58	16 30 58	−43 −68	18 34 68	−43 −68	18 34 68	−43 −68	18 34 68	−50 −79	20 40 79	−50 −79	20 40 79	−50 −79	20 40 79
−10 −23	**5** 4 23		−12 −27	**8** 4 27	−12 −27	**8** 4 27	−14 −32	**11** 3 32	−14 −32	**11** 3 32	−14 −32	**11** 3 32	−15 −35	**15** 2 35	−15 −35	**15** 2 35	−15 −35	**15** 2 35
−10 −29	**5** 6 29		−12 −34	**8** 6 34	−12 −34	**8** 6 34	−14 −39	**11** 6 39	−14 −39	**11** 6 39	−14 −39	**11** 6 39	−15 −44	**15** 5 44	−15 −44	**15** 5 44	−15 −44	**15** 5 44
0 −13	**15** **6** 13		0 −15	**20** **8** 15	0 −15	**20** **8** 15	0 −18	**25** **11** 18	0 −18	**25** **11** 18	0 −18	**25** **11** 18	0 −20	**30** **13** 20	0 −20	**30** **13** 20	0 −20	**30** **13** 20
0 −19	**15** **4** 19		0 −22	**20** **6** 22	0 −22	**20** **6** 22	0 −25	**25** **8** 25	0 −25	**25** **8** 25	0 −25	**25** **8** 25	0 −29	**30** **10** 29	0 −29	**30** **10** 29	0 −29	**30** **10** 29
+6 −7	**21** **12** 7		+6 −9	**26** **14** 9	+6 −9	**26** **14** 9	+7 −11	**32** **18** 11	+7 −11	**32** **18** 11	+7 −11	**32** **18** 11	+7 −13	**37** **20** 13	+7 −13	**37** **20** 13	+7 −13	**37** **20** 13
+12 −7	**27** **16** 7		+13 −9	**33** **19** 9	+13 −9	**33** **19** 9	+14 −11	**39** **22** 11	+14 −11	**39** **22** 11	+14 −11	**39** **22** 11	+16 −13	**46** **26** 13	+16 −13	**46** **26** 13	+16 −13	**46** **26** 13
+6,5 −6,5	**22** **13** 7		+7,5 −7,5	**28** **16** 8	+7,5 −7,5	**28** **16** 8	+9 −9	**34** **20** 9	+9 −9	**34** **20** 9	+9 −9	**34** **20** 9	+10 −10	**40** **23** 10	+10 −10	**40** **23** 10	+10 −10	**40** **23** 10
+9,5 −9,5	**25** **13** 10		+11 −11	**31** **17** 11	+11 −11	**31** **17** 11	+12,5 −12,5	**38** **21** 13	+12,5 −12,5	**38** **21** 13	+12,5 −12,5	**38** **21** 13	+14,5 −14,5	**45** **25** 15	+14,5 −14,5	**45** **25** 15	+14,5 −14,5	**45** **25** 15
+15 +2	**30** **21** **2**		+18 +3	**38** **26** **3**	+18 +3	**38** **26** **3**	+21 +3	**46** **32** **3**	+21 +3	**46** **32** **3**	+21 +3	**46** **32** **3**	+24 +4	**54** **37** **4**	+24 +4	**54** **37** **4**	+24 +4	**54** **37** **4**
+21 +2	**36** **25** **2**		+25 +3	**45** **31** **3**	+25 +3	**45** **31** **3**	+28 +3	**53** **36** **3**	+28 +3	**53** **36** **3**	+28 +3	**53** **36** **3**	+33 +4	**63** **43** **4**	+33 +4	**63** **43** **4**	+33 +4	**63** **43** **4**
+24 +11	**39** **30** **11**		+28 +13	**48** **36** **13**	+28 +13	**48** **36** **13**	+33 +15	**58** **44** **15**	+33 +15	**58** **44** **15**	+33 +15	**58** **44** **15**	+37 +17	**67** **50** **17**	+37 +17	**67** **50** **17**	+37 +17	**67** **50** **17**
+30 +11	**45** **34** **11**		+35 +13	**55** **42** **13**	+35 +13	**55** **42** **13**	+40 +15	**65** **48** **15**	+40 +15	**65** **48** **15**	+40 +15	**65** **48** **15**	+46 +17	**76** **56** **17**	+46 +17	**76** **56** **17**	+46 +17	**76** **56** **17**

6 Shaft fits

		Nominal shaft diameter in mm									
		over incl.	**250** **280**		**280** **315**		**315** **355**		**355** **400**		**400** **450**	
		Deviations of bearing bore diameter in µm (tolerance class Normal)										
		$t_{\Delta dmp}$	0 −35		0 −35		0 −40		0 −40		0 −45	
		Shaft deviation, fit interference or fit clearance in µm										
Clearance fit	**f6**	−56 −88	21 44 88	−56 −88	21 44 88	−62 −98	22 47 98	−62 −98	22 47 98	−68 −108	23 51 108
Transition fit	**g5**	−17 −40	**18** 1 40	−17 −40	**18** 1 40	−18 −43	**22** **0** 43	−18 −43	**22** **0** 43	−20 −47	**25** **1** 47
	g6	−17 −49	**18** 4 49	−17 −49	**18** 4 49	−18 −54	**22** 3 54	−18 −54	**22** 3 54	−20 −60	**25** 3 60
	h5	0 −23	**35** **16** 23	0 −23	**35** **16** 23	0 −25	**40** **18** 25	0 −25	**40** **18** 25	0 −27	**45** **21** 27
	h6	0 −32	**35** **13** 32	0 −32	**35** **13** 32	0 −36	**40** **15** 36	0 −36	**40** **15** 36	0 −40	**45** **17** 40
	j5	+7 −16	**42** **23** 16	+7 −16	**42** **23** 16	+7 −18	**47** **25** 18	+7 −18	**47** **25** 18	+7 −20	**52** **28** 20
	j6	+16 −16	**51** **29** 16	+16 −16	**51** **29** 16	+18 −18	**58** **33** 18	+18 −18	**58** **33** 18	+20 −20	**65** **37** 20
	js5	+11,5 −11,5	**47** **27** 12	+11,5 −11,5	**47** **27** 12	+12,5 −12,5	**53** **32** 13	+12,5 −12,5	**53** **32** 13	+13,5 −13,5	**59** **35** 14
	js6	+16 −16	**51** **29** 16	+16 −16	**51** **29** 16	+18 −18	**58** **33** 18	+18 −18	**58** **33** 18	+20 −20	**65** **37** 20
Interference fit	**k5**	+27 +4	**62** **43** **4**	+27 +4	**62** **43** **4**	+29 +4	**69** **47** **4**	+29 +4	**69** **47** **4**	+32 +5	**77** **53** **5**
	k6	+36 +4	**71** **49** **4**	+36 +4	**71** **49** **4**	+40 +4	**80** **55** **4**	+40 +4	**80** **55** **4**	+45 +5	**90** **62** **5**
	m5	+43 +20	**78** **59** **20**	+43 +20	**78** **59** **20**	+46 +21	**86** **64** **21**	+46 +21	**86** **64** **21**	+50 +23	**95** **71** **23**
	m6	+52 +20	**87** **65** **20**	+52 +20	**87** **65** **20**	+57 +21	**97** **72** **21**	+57 +21	**97** **72** **21**	+63 +23	**108** **80** **23**

Values **in bold type** in the group of three indicate fit interference, values in normal type indicate fit clearance.

450 500		500 560		560 630		630 710		710 800		800 900	
0 −45		0 −50		0 −50		0 −75		0 −75		0 −100	
−68 −108	23 51 108	−76 −120	26 58 120	−76 −120	26 58 120	−80 −130	5 47 130	−80 −130	5 47 130	−86 −146	**14** 39 146
−20 −47	**25** **1** 47	–	–	–	–	–	–	–	–	–	–
−20 −60	**25** 3 60	−22 −66	**28** 4 66	−22 −66	**28** 4 66	−24 −74	**51** **9** 74	−24 −74	**51** **9** 74	−26 −82	**74** **24** 82
0 −27	**45** **21** 27	0 −32	**50** **23** 32	0 −32	**50** **23** 32	0 −36	**75** **38** 36	0 −36	**75** **38** 36	0 −40	**100** **53** 40
0 −40	**45** **17** 40	0 −44	**50** **18** 44	0 −44	**50** **18** 44	0 −50	**75** **33** 50	0 −50	**75** **33** 50	0 −56	**100** **48** 56
+7 −20	**52** **28** 20	–	–	–	–	–	–	–	–	–	–
+20 −20	**65** **37** 20	–	–	–	–	–	–	–	–	–	–
+13,5 −13,5	**59** **35** 14	+16 −16	**65** **38** 16	+16 −16	**65** **38** 16	+18 −18	**91** **55** 18	+18 −18	**91** **55** 18	+20 −20	**118** **72** 20
+20 −20	**65** **37** 20	+22 −22	**72** **40** 22	+22 −22	**72** **40** 22	+25 −25	**100** **58** 25	+25 −25	**100** **58** 25	+28 −28	**128** **76** 28
+32 +5	**77** **53** **5**	–	–	–	–	–	–	–	–	–	–
+45 +5	**90** **62** **5**	+44 0	**94** **62** **0**	+44 0	**94** **62** **0**	+50 0	**125** **83** **0**	+50 0	**125** **83** **0**	+56 0	**156** **104** **0**
+50 +23	**95** **71** **23**	–	–	–	–	–	–	–	–	–	–
+63 +23	**108** **80** **23**	+70 +26	**120** **88** **26**	+70 +26	**120** **88** **26**	+80 +30	**155** **113** **30**	+80 +30	**155** **113** **30**	+90 +34	**190** **138** **34**

6 Shaft fits

	Nominal shaft diameter in mm											
	over incl.	**3** **6**		**6** **10**		**10** **18**		**18** **30**		**30** **50**		**50** **65**	
	Deviations of bearing bore diameter in µm (tolerance class Normal)												
	$t_{\Delta dmp}$	0 −8		0 −8		0 −8		0 −10		0 −12		0 −15	
	Shaft deviation, fit interference or fit clearance in µm												
Interference fit	**n5**	+13 +8	**21** **17** **8**	+16 +10	**24** **19** **10**	+20 +12	**28** **23** **12**	+24 +15	**34** **28** **15**	+28 +17	**40** **32** **17**	+33 +20	**48** **39** **20**
	n6	+16 +8	**24** **19** **8**	+19 +10	**27** **21** **10**	+23 +12	**31** **25** **12**	+28 +15	**38** **30** **15**	+33 +17	**45** **36** **17**	+39 +20	**54** **43** **20**
	p6	+20 +12	**28** **23** **12**	+24 +15	**32** **26** **15**	+29 +18	**37** **31** **18**	+35 +22	**45** **37** **22**	+42 +26	**54** **45** **26**	+51 +32	**66** **55** **32**
	p7	+24 +12	**32** **25** **12**	+30 +15	**38** **30** **15**	+36 +18	**44** **35** **18**	+43 +22	**53** **43** **22**	+51 +26	**63** **51** **26**	+62 +32	**77** **62** **32**
	r6	+23 +15	**31** **25** **15**	+28 +19	**36** **30** **19**	+34 +23	**42** **35** **23**	+41 +28	**51** **44** **28**	+50 +34	**62** **53** **34**	+60 +41	**75** **64** **41**
	r7	+27 +15	**35** **28** **15**	+34 +19	**42** **34** **19**	+41 +23	**49** **40** **23**	+49 +28	**59** **49** **28**	+59 +34	**71** **59** **34**	+71 +41	**86** **71** **41**
	s6	+27 +19	**35** **30** **19**	+32 +23	**40** **34** **23**	+39 +28	**47** **41** **28**	+48 +35	**58** **50** **35**	+59 +43	**71** **62** **43**	+72 +53	**87** **76** **53**

Values **in bold type** in the group of three indicate fit interference, values in normal type indicate fit clearance.

65 80		80 100		100 120		120 140		140 160		160 180		180 200		200 220		220 250	
0 −15		0 −20		0 −20		0 −25		0 −25		0 −25		0 −30		0 −30		0 −30	
+33 +20	**48 39 20**	+38 +23	**58 46 23**	+38 +23	**58 46 23**	+45 +27	**70 56 27**	+45 +27	**70 56 27**	+45 +27	**70 56 27**	+51 +31	**81 64 31**	+51 +31	**81 64 31**	+51 +31	**81 64 31**
+39 +20	**54 43 20**	+45 +23	**65 51 23**	+45 +23	**65 51 23**	+52 +27	**77 60 27**	+52 +27	**77 60 27**	+52 +27	**77 60 27**	+60 +31	**90 70 31**	+60 +31	**90 70 31**	+60 +31	**90 70 31**
+51 +32	**66 55 32**	+59 +37	**79 65 37**	+59 +37	**79 65 37**	+68 +43	**93 76 43**	+68 +43	**93 76 43**	+68 +43	**93 76 43**	+79 +50	**109 89 50**	+79 +50	**109 89 50**	+79 +50	**109 89 50**
+62 +32	**77 62 32**	+72 +37	**92 73 37**	+72 +37	**92 73 37**	+83 +43	**108 87 43**	+83 +43	**108 87 43**	+83 +43	**108 87 43**	+96 +50	**126 101 50**	+96 +50	**126 101 50**	+96 +50	**126 101 50**
+62 +43	**77 66 43**	+73 +51	**93 79 51**	+76 +54	**96 82 54**	+88 +63	**113 97 63**	+90 +65	**115 99 65**	+93 +68	**118 102 68**	+106 +77	**136 116 77**	+109 +80	**139 119 80**	+113 +84	**143 123 84**
+73 +43	**88 73 43**	+86 +51	**106 87 51**	+89 +54	**109 90 54**	+103 +63	**128 107 63**	+105 +65	**130 109 65**	+108 +68	**133 112 68**	+123 +77	**153 128 77**	+126 +80	**156 131 80**	+130 +84	**160 135 84**
+78 +59	**93 82 59**	+93 +71	**113 99 71**	+101 +79	**121 107 79**	+117 +92	**142 125 92**	+125 +100	**150 133 100**	+133 +108	**158 141 108**	+151 +122	**181 161 122**	+159 +130	**189 169 130**	+169 +140	**199 179 140**

6 *Shaft fits*

		Nominal shaft diameter in mm									
		over incl.	**250** **280**		**280** **315**		**315** **355**		**355** **400**		**400** **450**
		Deviations of bearing bore diameter in µm (tolerance class Normal)									
		$t_{\Delta dmp}$	0 −35		0 −35		0 −40		0 −40		0 −45
		Shaft deviation, fit interference or fit clearance in µm									
Interference fit	**n5**	+57 +34	**92** **73** **34**	+57 +34	**92** **73** **34**	+62 +37	**102** **80** **37**	+62 +37	**102** **80** **37**	+67 +40	**112** **88** **40**
	n6	+66 +34	**101** **79** **34**	+66 +34	**101** **79** **34**	+73 +37	**113** **88** **37**	+73 +37	**113** **88** **37**	+80 +40	**125** **97** **40**
	p6	+88 +56	**123** **101** **56**	+88 +56	**123** **101** **56**	+98 +62	**138** **113** **62**	+98 +62	**138** **113** **62**	+108 +68	**153** **125** **68**
	p7	+108 +56	**143** **114** **56**	+108 +56	**143** **114** **56**	+119 +62	**159** **127** **62**	+119 +62	**159** **127** **62**	+131 +68	**176** **139** **68**
	r6	+126 +94	**161** **138** **94**	+130 +98	**165** **142** **98**	+144 +108	**184** **159** **108**	+150 +114	**190** **165** **114**	+166 +126	**211** **183** **126**
	r7	+146 +94	**181** **152** **94**	+150 +98	**185** **156** **98**	+165 +108	**205** **173** **108**	+171 +114	**211** **179** **114**	+189 +126	**234** **198** **126**
	s6	+190 +158	**225** **203** **158**	+202 +170	**237** **215** **170**	+226 +190	**266** **241** **190**	+244 +208	**284** **259** **208**	+272 +232	**317** **289** **232**

Values **in bold type** in the group of three indicate fit interference, values in normal type indicate fit clearance.



	450 500		500 560		560 630		630 710		710 800		800 900	
	0 −45		0 −50		0 −50		0 −75		0 −75		0 −100	
+67 +40	**112 88 40**	–	–	–	–	–	–	–	–	–	–	–
+80 +40	**125 97 40**	+88 +44	**138 106 44**	+88 +44	**138 106 44**	+100 +50	**175 133 50**	+100 +50	**175 133 50**	+112 +56	**212 160 56**
+108 +68	**153 125 68**	+122 +78	**172 140 78**	+122 +78	**172 140 78**	+138 +88	**213 171 88**	+138 +88	**213 171 88**	+156 +100	**256 204 100**
+131 +68	**176 139 68**	+148 +78	**198 158 78**	+148 +78	**198 158 78**	+168 +88	**243 199 88**	+168 +88	**243 199 88**	+190 +100	**290 227 100**
+172 +132	**217 189 132**	+194 +150	**244 212 150**	+199 +155	**249 217 155**	+225 +175	**300 258 175**	+235 +185	**310 268 185**	+266 +210	**366 314 210**
+195 +132	**240 204 132**	+220 +150	**270 230 150**	+225 +155	**275 235 155**	+255 +175	**330 278 175**	+265 +185	**340 288 185**	+300 +210	**400 337 210**
+292 +252	**337 309 252**	+324 +280	**374 343 280**	+354 +310	**404 373 310**	+390 +340	**465 423 340**	+430 +380	**505 463 380**	+486 +430	**586 534 430**

7 Housing fits

		Nominal housing bore diameter in mm					
		over	**6**	**10**		**18**	
		incl.	**10**	**18**		**30**	
		Deviations of bearing outside diameter in µm (tolerance class Normal)					
		$t_{\Delta Dmp}$	0 −8	0 −8		0 −9	
		Housing deviation, fit interference or fit clearance in µm					
Clearance fit	**E8**	+47 +25	25 35 55	+59 +32	32 44 67	+73 +40	40 54 82
	F7	+28 +13	13 21 36	+34 +16	16 25 42	+41 +20	20 30 50
	G6	+14 +5	5 11 22	+17 +6	6 12 25	+20 +7	7 14 29
	G7	+20 +5	5 13 28	+24 +6	6 15 32	+28 +7	7 17 37
	H6	+9 0	**0** 6 17	+11 0	**0** 6 19	+13 0	**0** 7 22
	H7	+15 0	**0** 8 23	+18 0	**0** 9 26	+21 0	**0** 10 30
	H8	+22 0	**0** 10 30	+27 0	**0** 12 35	+33 0	**0** 14 42
Transition fit	**J6**	+5 −4	**4** 2 13	+6 −5	**5** 1 14	+8 −5	**5** 2 17
	J7	+8 −7	**7** 1 16	+10 −8	**8** 1 18	+12 −9	**9** 1 21
	JS6	+4,5 −4,5	**4,5** 2 12,5	+5,5 −5,5	**5,5** 1 13,5	+6,5 −6,5	**6,5** **0** 15,5
	JS7	+7,5 −7,5	**7,5** 1 15,5	+9 −9	**9** **0** 17	+10,5 −10,5	**10,5** **1** 19,5
	K6	+2 −7	**7** **1** 10	+2 −9	**9** **3** 10	+2 −11	**11** **4** 11
	K7	+5 −10	**10** **2** 13	+6 −12	**12** **3** 14	+6 −15	**15** **5** 15

Example: housing ∅ 100 K6 Ⓔ

Minimum material value	+4	**18**	Interference or fit clearance if the maximum material values are combined.
		6	Probable interference or fit clearance.
Maximum material value	−18	19	Interference or fit clearance if the minimum material values are combined.

Values **in bold type** in the group of three indicate fit interference, values in normal type indicate fit clearance.

30 **50**		**50** **80**		**80** **120**		**120** **150**		**150** **180**	
0 −11		0 −13		0 −15		0 −18		0 −25	
+89 +50	50 67 100	+106 +60	60 79 119	+126 +72	72 85 141	+148 +85	85 112 166	+148 +85	85 114 173
+50 +25	25 37 61	+60 +30	30 44 73	+71 +36	36 53 86	+83 +43	43 62 101	+83 +43	43 64 108
+25 +9	9 18 36	+29 +10	10 21 42	+34 +12	12 24 49	+39 +14	14 28 57	+39 +14	14 31 64
+34 +9	9 21 45	+40 +10	10 24 53	+47 +12	12 29 62	+54 +14	14 33 72	+54 +14	14 36 79
+16 0	**0** 9 27	+19 0	**0** 11 32	+22 0	**0** 12 37	+25 0	**0** 14 43	+25 0	**0** 17 50
+25 0	**0** 12 36	+30 0	**0** 14 43	+35 0	**0** 17 50	+40 0	**0** 19 58	+40 0	**0** 22 65
+39 0	**0** 17 50	+46 0	**0** 20 59	+54 0	**0** 23 69	+63 0	**0** 27 81	+63 0	**0** 29 88
+10 −6	**6** 3 21	+13 −6	**6** 5 26	+16 −6	**6** 6 31	+18 −7	**7** 7 36	+18 −7	**7** 10 43
+14 −11	**11** 1 25	+18 −12	**12** 2 31	+22 −13	**13** 4 37	+26 −14	**14** 5 44	+26 −14	**14** 8 51
+8 −8	**8** 1 19	+9,5 −9,5	**9,5** **0** 22,5	+11 −11	**11** 1 26	+12,5 −12,5	**12,5** 1 30,5	+12,5 −12,5	**12,5** 3 37,5
+12,5 −12,5	**12,5** **1** 23,5	+15 −15	**15** **1** 28	+17,5 −17,5	**17,5** **1** 32,5	+20 −20	**20** 1 38	+20 −20	**20** 1 45
+3 −13	**13** **4** 14	+4 −15	**15** **4** 17	+4 −18	**18** **6** 19	+4 −21	**21** **7** 22	+4 −21	**21** **4** 29
+7 −18	**18** **6** 18	+9 −21	**21** **7** 22	+10 −25	**25** **8** 25	+12 −28	**28** **9** 30	+12 −28	**28** **6** 37

7 *Housing fits*

		Nominal housing bore diameter in mm					
		over incl.	**180** **250**		**250** **315**		**315** **400**	
		Deviations of bearing outside diameter in µm (tolerance class Normal)					
		$t_{\Delta Dmp}$	0 −30		0 −35		0 −40	
		Housing deviation, fit interference or fit clearance in µm					
Clearance fit	**E8**	+172 +100	100 134 202	+191 +110	110 149 226	+214 +125	125 168 254
	F7	+96 +50	50 75 126	+108 +56	56 85 143	+119 +62	62 94 159
	G6	+44 +15	15 35 74	+49 +17	17 39 84	+54 +18	18 43 94
	G7	+61 +15	15 40 91	+69 +17	17 46 104	+75 +18	18 50 115
	H6	+29 0	**0** 20 59	+32 0	**0** 22 67	+36 0	**0** 25 76
	H7	+46 0	**0** 25 76	+52 0	**0** 29 87	+57 0	**0** 32 97
	H8	+72 0	**0** 34 102	+81 0	**0** 39 116	+89 0	**0** 43 129
Transition fit	**J6**	+22 −7	**7** 13 52	+25 −7	**7** 15 60	+29 −7	**7** 18 69
	J7	+30 −16	**16** 9 60	+36 −16	**16** 13 71	+39 −18	**18** 14 79
	JS6	+14,5 −14,5	**14,5** 5 44,5	+16 −16	**16** 7 51	+18 −18	**18** 6 58
	JS7	+23 −23	**23** 2 53	+26 −26	**26** 3 61	+28,5 −28,5	**28,5** 3 68,5
	K6	+5 −24	**24** **4** 35	+5 −27	**27** **5** 40	+7 −29	**29** **4** 47
	K7	+13 −33	**33** **8** 43	+16 −36	**36** **7** 51	+17 −40	**40** **8** 57

Values **in bold type** in the group of three indicate fit interference, values in normal type indicate fit clearance.

400 500		500 630		630 800		800 1000		1000 1250	
0 −45		0 −50		0 −75		0 −100		0 −125	
+232 +135	135 182 277	+255 +145	145 199 305	+285 +160	160 227 360	+310 +170	170 250 410	+360 +195	195 292 485
+131 +68	68 104 176	+146 +76	76 116 196	+160 +80	80 132 235	+176 +86	86 149 276	+203 +98	98 175 328
+60 +20	20 48 105	+66 +22	22 54 116	+74 +24	24 66 149	+82 +26	26 78 182	+94 +28	28 93 219
+83 +20	20 56 128	+92 +22	22 62 142	+104 +24	24 76 179	+116 +26	26 89 216	+133 +28	28 105 258
+40 0	**0** 28 85	+44 0	**0** 32 94	+50 0	**0** 42 125	+56 0	**0** 52 156	+66 0	**0** 64 191
+63 0	**0** 36 108	+70 0	**0** 40 120	+80 0	**0** 52 155	+90 0	**0** 63 190	+105 0	**0** 77 230
+97 0	**0** 47 142	+110 0	**0** 54 160	+125 0	**0** 67 200	+140 0	**0** 80 240	+165 0	**0** 97 290
+33 −7	**7** 21 78	–	–	–	–	–	–	–	–
+43 −20	**20** 16 88	–	–	–	–	–	–	–	–
+20 −20	**20** 8 65	+22 −22	**22** 10 72	+25 −25	**25** 17 100	+28 −28	**28** 24 128	+33 −33	**33** 31 158
+31,5 −31,5	**31,5** 4 76,5	+35 −35	**35** 5 85	+40 −40	**40** 12 115	+45 −45	**45** 18 145	+52,5 −52,5	**52** 24 177
+8 −32	**32** **4** 53	0 −44	**44** **12** 50	0 −50	**50** **8** 75	0 −56	**56** **4** 100	0 −66	**66** **2** 125
+18 −45	**45** **9** 63	0 −70	**70** **30** 50	0 −80	**80** **28** 75	0 −90	**90** **27** 100	0 −105	**105** **28** 125

7 *Housing fits*

	Nominal housing bore diameter in mm						
	over incl.	**6** **10**		**10** **18**		**18** **30**	
	Deviations of bearing outside diameter in µm (tolerance class Normal)						
	$t_{\Delta Dmp}$	0 –8		0 –8		0 –9	
	Housing deviation, fit interference or fit clearance in µm						
Transition fit	**M6**	–3 –12	**12** **6** 5	–4 –15	**15** **9** 4	–4 –17	**17** **10** 5
	M7	0 –15	**15** **7** 8	0 –18	**18** **9** 8	0 –21	**21** **11** 9
	N6	–7 –16	**16** **10** 1	–9 –20	**20** **14** 1	–11 –24	**24** **17** 2
	N7	–4 –19	**19** **11** 4	–5 –23	**23** **14** 3	–7 –28	**28** **18** 2
Interference fit	**P6**	–12 –21	**21** **15** **4**	–15 –26	**26** **20** **7**	–18 –31	**31** **24** **9**
	P7	–9 –24	**24** **16** **1**	–11 –29	**29** **20** **3**	–14 –35	**35** **25** **5**

Values **in bold type** in the group of three indicate fit interference, values in normal type indicate fit clearance.

	30 **50**		**50** **80**		**80** **120**		**120** **150**		**150** **180**	
	0 −11		0 −13		0 −15		0 −18		0 −25	
−4 −20	**20** **11** 7	−5 −24	**24** **13** 8	−6 −28	**28** **16** 9	−8 −33	**33** **19** 10	−8 −33	**33** **16** 17
0 −25	**25** **13** 11	0 −30	**30** **16** 13	0 −35	**35** **18** 15	0 −40	**40** **21** 18	0 −40	**40** **18** 25
−12 −28	**28** **19** 1	−14 −33	**33** **22** 1	−16 −38	**38** **26** 1	−20 −45	**45** **31** 2	−20 −45	**45** **28** 5
−8 −33	**33** **21** 3	−9 −39	**39** **25** 4	−10 −45	**45** **28** 5	−12 −52	**52** **33** 3	−12 −52	**52** **30** 13
−21 −37	**37** **28** **10**	−26 −45	**45** **34** **13**	−30 −52	**52** **40** **15**	−36 −61	**61** **47** **18**	−36 −61	**61** **44** **11**
−17 −42	**42** **30** **6**	−21 −51	**51** **37** **8**	−24 −59	**59** **42** **9**	−28 −68	**68** **49** **10**	−28 −68	**68** **46** **3**

7 *Housing fits*

	Nominal housing bore diameter in mm						
	over incl.	**180** **250**		**250** **315**		**315** **400**	
	Deviations of bearing outside diameter in µm (tolerance class Normal)						
	$t_{\Delta Dmp}$	0 −30		0 −35		0 −40	
	Housing deviation, fit interference or fit clearance in µm						
Transition fit	**M6**	−8 −37	**37** **17** 22	−9 −41	**41** **19** 26	−10 −46	**46** **21** 30
	M7	0 −46	**46** **21** 30	0 −52	**52** **23** 35	0 −57	**57** **25** 40
	N6	−22 −51	**51** **31** 8	−25 −57	**57** **35** 10	−26 −62	**62** **37** 14
	N7	−14 −60	**60** **35** 16	−14 −66	**66** **37** 21	−16 −73	**73** **41** 24
Interference fit	**P6**	−41 −70	**70** **50** **11**	−47 −79	**79** **57** **12**	−51 −87	**87** **62** **11**
	P7	−33 −79	**79** **54** **3**	−36 −88	**88** **59** **1**	−41 −98	**98** **66** **1**

Values **in bold type** in the group of three indicate fit interference, values in normal type indicate fit clearance.

400 **500**		**500** **630**		**630** **800**		**800** **1000**		**1000** **1250**	
0 −45		0 −50		0 −75		0 −100		0 −125	
−10 −50	**50** **22** 35	−26 −70	**70** **38** 24	−30 −80	**80** **38** 45	−34 −90	**90** **38** 66	−40 −106	**106** **45** 85
0 −63	**63** **27** 45	−26 −96	**96** **56** 24	−30 −110	**110** **58** 45	−34 −124	**124** **61** 66	−40 −145	**145** **68** 85
−27 −67	**67** **39** 18	−44 −88	**88** **56** 6	−50 −100	**100** **58** 25	−56 −112	**112** **60** 44	−66 −132	**132** **67** 59
−17 −80	**80** **44** 28	−44 −114	**114** **74** 6	−50 −130	**130** **78** 25	−56 −146	**146** **83** 44	−66 −171	**171** **94** 59
−55 −95	**95** **67** **10**	−78 −122	**122** **90** **28**	−88 −138	**138** **96** **13**	−100 −156	**156** **104** **0**	−120 −186	**186** **121** 5
−45 −108	**108** **72** **0**	−78 −148	**148** **108** **28**	−88 −168	**168** **126** **13**	−100 −190	**190** **127** **0**	−120 −225	**225** **148** 5

Shaft tolerances for adapter sleeves and withdrawal sleeves are shown in ➤ *168* | ▦ *8*.

▦ **8**
Shaft tolerances for adapter sleeves and withdrawal sleeves

The numbers printed in italics give guide values for the cylindricity tolerance t_1 (DIN EN ISO 1101) ➤ *170* | ⧉ *11*.

Nominal shaft diameter		Shaft tolerance					
		h7/ $\frac{IT5}{2}$		**h8**/ $\frac{IT5}{2}$		**h9**/ $\frac{IT6}{2}$	
mm		µm		µm		µm	
over	incl.						
3	**6**	0 −12	*2,5*	0 −18	*2,5*	0 −30	*4*
6	**10**	0 −15	*3*	0 −22	*3*	0 −36	*4,5*
10	**18**	0 −18	*4*	0 −27	*4*	0 −43	*5,5*
18	**30**	0 −21	*4,5*	0 −33	*4,5*	0 −52	*6,5*
30	**50**	0 −25	*5,5*	0 −39	*5,5*	0 −62	*8*
50	**65**	0 −30	*6,5*	0 −46	*6,5*	0 −74	*9,5*
65	**80**	0 −30	*6,5*	0 −46	*6,5*	0 −74	*9,5*
80	**100**	0 −35	*7,5*	0 −54	*7,5*	0 −87	*11*
100	**120**	0 −35	*7,5*	0 −54	*7,5*	0 −87	*11*
120	**140**	0 −40	*9*	0 −63	*9*	0 −100	*12,5*
140	**160**	0 −40	*9*	0 −63	*9*	0 −100	*12,5*
160	**180**	0 −40	*9*	0 −63	*9*	0 −100	*12,5*
180	**200**	0 −46	*10*	0 −72	*10*	0 −115	*14,5*
200	**220**	0 −46	*10*	0 −72	*10*	0 −115	*14,5*
220	**250**	0 −46	*10*	0 −72	*10*	0 −115	*14,5*
250	**280**	0 −52	*11,5*	0 −81	*11,5*	0 −130	*16*
280	**315**	0 −52	*11,5*	0 −81	*11,5*	0 −130	*16*
315	**355**	0 −57	*12,5*	0 −89	*12,5*	0 −140	*18*
355	**400**	0 −57	*12,5*	0 −89	*12,5*	0 −140	*18*
400	**450**	0 −63	*13,5*	0 −97	*13,5*	0 −155	*20*
450	**500**	0 −63	*13,5*	0 −97	*13,5*	0 −155	*20*
500	**560**	0 −70	*16*	0 −110	*16*	0 −175	*22*
560	**630**	0 −70	*16*	0 −110	*16*	0 −175	*22*
630	**710**	0 −80	*18*	0 −125	*18*	0 −200	*25*
710	**800**	0 −80	*18*	0 −125	*18*	0 −200	*25*
800	**900**	0 −90	*20*	0 −140	*20*	0 −230	*28*

8.5 Enveloping circle

For bearings without an inner ring, the enveloping circle F_w ➤169|10 is used. This is the inner inscribed circle of the rolling elements in clearance-free contact with the outer raceway. The enveloping circle for unfitted machined needle roller bearings is in the tolerance class F6 and for drawn cup needle roller bearings in the tolerance class F8. Deviations for F6 and F8 ➤169|9.

For cylindrical roller bearings without an inner ring, the enveloping circle F is used. For the tolerances of these designs, please consult Schaeffler.

10
Enveloping circle

F_w = *enveloping circle diameter*

① *Rolling element*
② *Outer raceway*

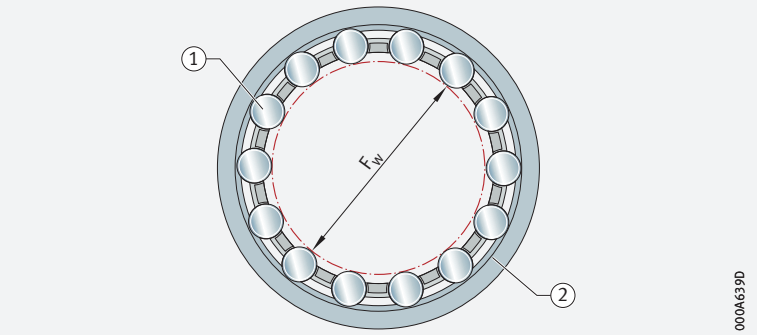

9
Deviations for the enveloping circle diameter

Enveloping circle diameter F_w mm		Tolerance class F6 Tolerance for enveloping circle diameter F_w		Tolerance class F8 Tolerance for enveloping circle diameter F_w	
		Upper deviation	Lower deviation	Upper deviation	Lower deviation
over	incl.	µm	µm	µm	µm
3	6	+18	+10	+28	+10
6	10	+22	+13	+35	+13
10	18	+27	+16	+43	+16
18	30	+33	+20	+53	+20
30	50	+41	+25	+64	+25
50	80	+49	+30	+76	+30
80	120	+58	+36	+90	+36
120	180	+68	+43	+106	+43
180	250	+79	+50	+122	+50
250	315	+88	+56	+137	+56
315	400	+98	+62	+151	+62
400	500	+108	+68	+165	+68

8.6 Dimensional, geometrical and running accuracy of mating parts

In order to achieve the required fit, the bearing seats and fit surfaces of the shaft and housing bore must conform to certain tolerances ➤170|11 and ➤171|10.

11
Guide values for the geometrical and positional tolerances of bearing seating surfaces

t_1 = *roundness tolerance*
t_2 = *parallelism tolerance*
t_3 = *total axial runout tolerance of abutment shoulders*
t_4 = *coaxiality tolerance*

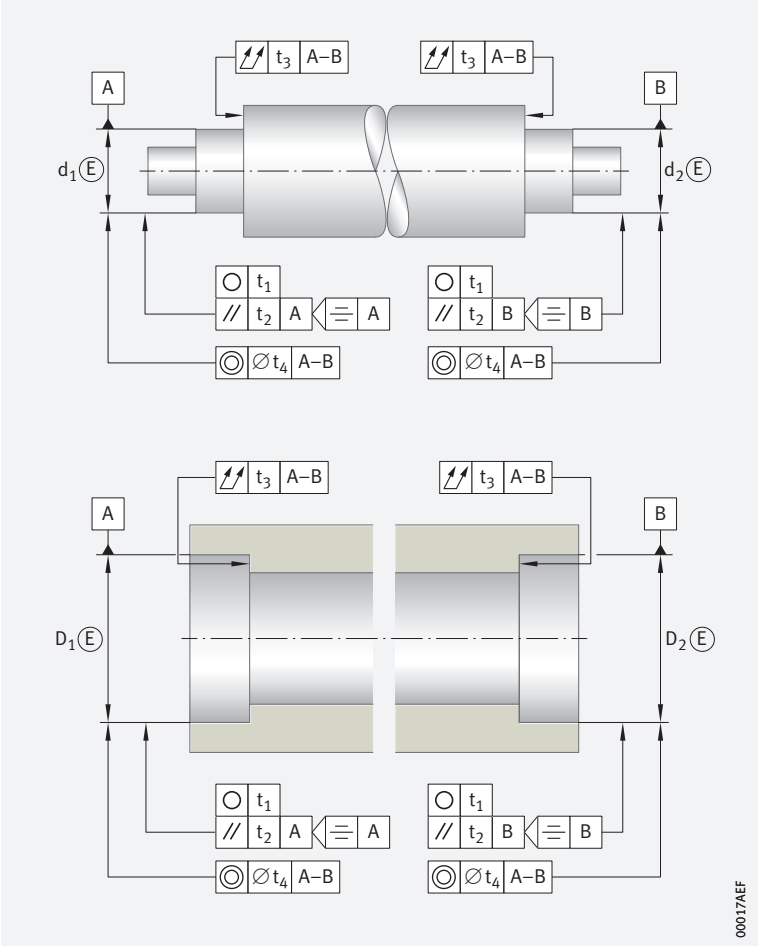

Accuracy of bearing seating surfaces

ISO fundamental tolerances

The degree of accuracy for the bearing seat tolerances on the shaft and in the housing, as well as the ISO fundamental tolerances, are shown in ➤171|10 (DIN ISO 286-1:2010).

Second bearing seat

The positional tolerances t_4 for a second bearing seat on the shaft (d_2) or in the housing (D_2) are dependent on the types of bearings used and the operating conditions. For the values required in the specific application, please consult Schaeffler.

Housings

In split housings, the joints must be free from burrs.
The accuracy of the bearing seats is determined as a function of the accuracy of the bearing selected.

10
Guide values for the geometrical and positional tolerances of bearing seating surfaces

Bearing tolerance class		Bearing seating surface	Fundamental tolerance grades[1]			
to ISO 492	to DIN 620		Diameter tolerance	Roundness tolerance t_1	Parallelism tolerance t_2	Total axial runout tolerance of abutment shoulder t_3
Normal 6X	PN (P0) P6X	Shaft	IT6 (IT5)	Circumferential load IT4/2	Circumferential load IT4/2	IT4
				Point load IT5/2	Point load IT5/2	
		Housing	IT7 (IT6)	Circumferential load IT5/2	Circumferential load IT5/2	IT5
				Point load IT6/2	Point load IT6/2	
6	P6	Shaft	IT5	Circumferential load IT3/2	Circumferential load IT3/2	IT3
				Point load IT4/2	Point load IT4/2	
		Housing	IT6	Circumferential load IT4/2	Circumferential load IT4/2	IT4
				Point load IT5/2	Point load IT5/2	
5	P5	Shaft	IT5	Circumferential load IT2/2	Circumferential load IT2/2	IT2
				Point load IT3/2	Point load IT3/2	
		Housing	IT6	Circumferential load IT3/2	Circumferential load IT3/2	IT3
				Point load IT4/2	Point load IT4/2	
4	P4 P4S[2] SP[2]	Shaft	IT4	Circumferential load IT1/2	Circumferential load IT1/2	IT1
				Point load IT2/2	Point load IT2/2	
		Housing	IT5	Circumferential load IT2/2	Circumferential load IT2/2	IT2
				Point load IT3/2	Point load IT3/2	
	UP[2]	Shaft	IT3	Circumferential load IT0/2	Circumferential load IT0/2	IT0
				Point load IT1/2	Point load IT1/2	
		Housing	IT4	Circumferential load IT1/2	Circumferential load IT1/2	IT1
				Point load IT2/2	Point load IT2/2	

[1] *ISO fundamental tolerances (IT grades) in accordance with DIN ISO 286. Values for IT grades ➤172|▦12.*

[2] *Not included in DIN 620.*

Roughness of bearing seats

✎Ra must not be too high

The roughness of the bearing seats must be matched to the tolerance class of the bearings. The mean roughness value Ra must not be too high, in order to maintain the interference loss within limits. Shafts must be ground, while bores must be precision turned. For further information on this subject ➤*172*|▦*11* and product chapter.

11
Roughness values for cylindrical bearing seating surfaces – guide values

Nominal diameter of bearing seat d (D) mm		Recommended mean roughness value for ground bearing seats Ramax µm			
		Diameter tolerance (IT grade)			
over	incl.	IT7	IT6	IT5	IT4
–	80	1,6	0,8	0,4	0,2
80	500	1,6	1,6	0,8	0,4
500	1 250	3,2[1)]	1,6	1,6	0,8

[1)] *For the mounting of bearings using the hydraulic method, a value Ra = 1,6 µm must not be exceeded*

Numerical values for IT grades

DIN ISO

➤ *172* | *12* shows numerical values for the ISO fundamental tolerances (IT grades) in accordance with DIN ISO 286-1:2010.

12
IT grades and values

IT grade	Nominal dimension in mm							
	over –	3	6	10	18	30	50	80
	incl. 3	6	10	18	30	50	80	120
	Values in µm							
IT01	0,3	0,4	0,4	0,5	0,6	0,6	0,8	1
IT0	0,5	0,6	0,6	0,8	1	1	1,2	1,5
IT1	0,8	1	1	1,2	1,5	1,5	2	2,5
IT2	1,2	1,5	1,5	2	2,5	2,5	3	4
IT3	2	2,5	2,5	3	4	4	5	6
IT4	3	4	4	5	6	7	8	10
IT5	4	5	6	8	9	11	13	15
IT6	6	8	9	11	13	16	19	22
IT7	10	12	15	18	21	25	30	35
IT8	14	18	22	27	33	39	46	54
IT9	25	30	36	43	52	62	74	87
IT10	40	48	58	70	84	100	120	140
IT11	60	75	90	110	130	160	190	220
IT12	100	120	150	180	210	250	300	350

continued ▼

12
IT grades and values

IT grade	Nominal dimension in mm							
	over 120	180	250	315	400	500	630	800
	incl. 180	250	315	400	500	630	800	1 000
	Values in µm							
IT01	1,2	2	2,5	3	4	–	–	–
IT0	2	3	4	5	6	–	–	–
IT1	3,5	4,5	6	7	8	9	10	11
IT2	5	7	8	9	10	11	13	15
IT3	8	10	12	13	15	16	18	21
IT4	12	14	16	18	20	22	25	28
IT5	18	20	23	25	27	32	36	40
IT6	25	29	32	36	40	44	50	56
IT7	40	46	52	57	63	70	80	90
IT8	63	72	81	89	97	110	125	140
IT9	100	115	130	140	155	175	200	230
IT10	160	185	210	230	250	280	320	360
IT11	250	290	320	360	400	440	500	560
IT12	400	460	520	570	630	700	800	900

continued ▲

Seats for adapter sleeves and withdrawal sleeves

Seat diameter tolerances for adapter sleeves and withdrawal sleeves

Adapter and withdrawal sleeves are used if increased requirements are not made on the running accuracy of the bearing. For the seats, diameter tolerances corresponding to the IT grades 7 to 9 are possible, while the geometrical deviation can be 50% of this value.

Tapered bearing seats for radial bearings

Geometrical and positional tolerances of the shaft

Guide values for the machining of tapered bearing seats on shafts are shown in ➤173|12, ➤173|13.

This information does not apply to super precision cylindrical roller bearings in machine tools (spindle bearing arrangement). For information on this subject, see the catalogue Super Precision Bearings SP 1.

Taper gauges

Schaeffler taper gauges can be used to check for adherence to the recommended tolerances.

12
Guide values for the geometrical and positional tolerances of tapered bearing seats

B = *bearing width*
SL = *L · taper ratio (1:12, 1:30)*
$t_{\Delta SL}'$ = *taper angle tolerance*
t_1 = *roundness tolerance* ➤171|10
t_6 = *perpendicularity tolerance* = $2/3 \cdot t_2$; *values for* t_2 ➤171|10
z = *recommended mean roughness* ➤172|11

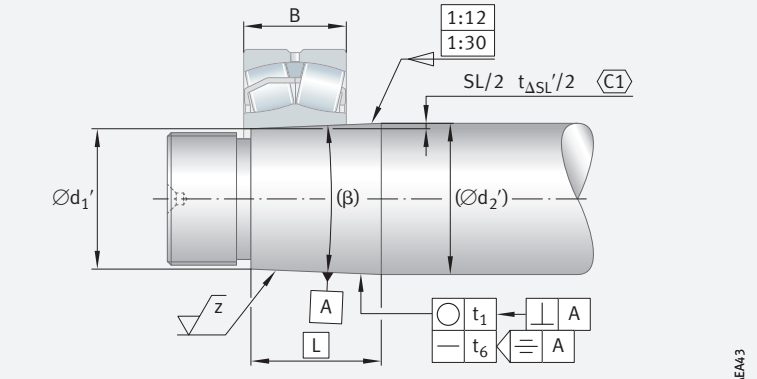

C1 $SL/2 = (d_{2\,current}' - d_{1\,current}')/2$

The tolerances for taper angle $t_{\Delta SL}$ relative to the bearing width B can be found in the table ➤173|13.

13
Taper angle tolerance of tapered bearing seats, relative to bearing width

Bearing width B (nominal dimension)		Taper angle tolerance $t_{\Delta SL}$			
		from		to	
mm		Deviations			
over	incl.	upper µm	lower µm	upper µm	lower µm
16	25	+8	0	+12,5	0
25	40	+10	0	+16	0
40	63	+12,5	0	+20	0
63	100	+16	0	+25	0
100	160	+20	0	+32	0
160	250	+25	0	+40	0
250	400	+32	0	+50	0
400	630	+40	0	+63	0

Determine $t_{\Delta SL}$ by means of interpolation

For bearing widths with nominal dimensions between the values listed in the table, the taper angle tolerance $t_{\Delta SL}$ should be determined by means of interpolation of the upper deviations ➤173|f1.

f1
Interpolation of the taper angle tolerance

$$t_{\Delta SL} = \frac{\Delta t_{\Delta SL}}{\Delta B} \cdot B$$

For a taper of length L, the taper angle tolerance $t_{\Delta SL}'$ of the entire taper applies ➤173|f2.

f2
Taper angle tolerance of the entire taper

$$t_{\Delta SL}' = \frac{t_{\Delta SL}}{B} \cdot L = \frac{\Delta t_{\Delta SL}}{\Delta B} \cdot L$$

Example of tolerance calculation

Given:

- bearing width B = 90 mm
- taper ratio 1:12
- taper length L = 100 mm

$$t_{\Delta SL}' = \frac{25\ \mu m - 16\ \mu m}{100\ mm - 63\ mm} \cdot 100\ mm = \frac{9\ \mu m}{37\ mm} \cdot 100\ mm \cong 24\ \mu m$$

The tolerance $t_{\Delta SL}'/2$ is thus 0 to +12 µm.

In order to calculate the taper slope SL (nominal dimension), the taper length L is multiplied by the taper ratio (1:12) ➤ 174 | 3.

3 *Taper slope*

$$SL = L \cdot \frac{1}{12}$$

$$SL = 100\ mm \cdot \frac{1}{12} = 8{,}333\ mm$$

The nominal dimension for SL/2 is thus 4,166 mm; SL/2 = 4,166 +0,012/0.

The data can then be entered in the drawing as follows ➤ 174 | 13.

13 *Example of drawing entry for dimensional tolerances*

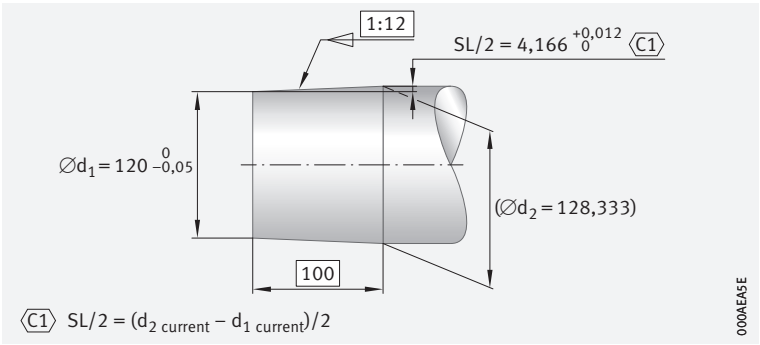

Checking of a shaft

Measured values:

- $d_1' = 120$ mm
- $d_2' = 128{,}345$ mm

The taper slope is calculated from the measured values using ➤ 174 | 4.

4 *Taper slope*

$$\frac{SL}{2} = \frac{d_2' - d_1'}{2}$$

$$\frac{SL}{2} = \frac{128{,}345\ mm - 120\ mm}{2} = 4{,}173\ mm$$

The value for SL/2 is thus within tolerance.

8.7 Axial location of bearings

Securing the bearing rings against axial creep by means of form fit

In order to prevent the bearing rings co-rotating, they are radially fixed by means of a tight fit. At the same time, the rings must be axially located in both directions so that they cannot undergo lateral creep. Axial creep cannot be prevented solely by a tight fit, especially not if a radial bearing must support large axial forces. For axial location, the bearing rings must therefore be connected by form fit to the shaft or the housing.

Examples

Solutions proven in practice for individual bearing arrangements (locating bearing arrangement, non-locating bearing arrangement, adjusted/floating bearing arrangement) and the axial location of bearing rings in certain bearing types are described below. Specific features of the individual bearing types are covered in the product chapters.

Guidelines for axial location of bearing rings

Locating bearing arrangement

Locating bearings can support axial forces in both directions

Locating bearings must in general also support axial forces. For the axial location of bearing rings, form fit elements such as shoulders, snap rings, covers, caps, nuts etc. have proved effective.

➤*175*|*14* shows bearing types that can be used as locating bearings and can support axial forces in both directions. The arrows in ➤*175*|*14* to ➤*177*|*16* indicate what task the axial location methods perform in the various types of mounting and types of bearing, such as axial location on both sides of the outer and inner ring of the deep groove ball bearing.

In locating bearing arrangements, both bearing rings must always be abutted on both sides. The fasteners must be matched to the magnitude of the axial forces present.

14
Axial location of bearing rings in locating bearings

= the means of location must support significant axial forces

① *Cylindrical roller bearing NUP*
② *Deep groove ball bearing*
③ *Spherical roller bearing*
④ *Angular contact ball bearing pair*
⑤ *Double direction axial deep groove ball bearing*

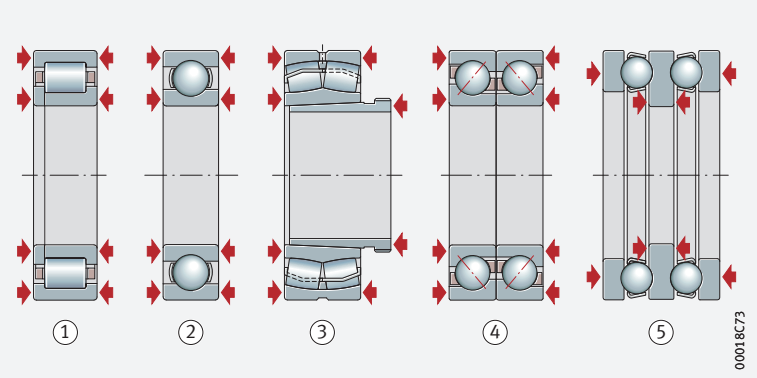

Cylindrical roller bearing, deep groove ball bearing

The cylindrical roller bearing NUP and deep groove ball bearing support alternating axial forces. Both rings must therefore be axially located on both sides.

Spherical roller bearing

The spherical roller bearing must, as a locating bearing, support axial forces from alternating directions. In this example, the inner ring is located by means of a withdrawal sleeve.

Angular contact ball bearings

The pair of angular contact ball bearings forms a locating bearing in which the two single row bearings are adjusted against each other in mounting. For location on the shaft, readjustable fasteners, such as nuts, are suitable.

Double direction axial deep groove ball bearing

The double direction axial deep groove ball bearing should be seen as a closed bearing group. The shaft locating washer is axially located on both sides, while the housing locating washers are each located on one side. In order that the ball and cage assemblies are guided correctly in the raceway grooves, the bearing is mounted clearance-free by adjustment of the housing locating washers.

Non-locating bearing arrangement

The means of axial location only needs to prevent lateral creep of the bearing rings

Non-locating bearings must only support slight axial forces. The axial location method only needs to prevent lateral creep of the rings. The simplest way of achieving this is by a tight fit. In the case of non-separable bearings, the rotating bearing ring has a tight fit. The other ring is axially retained by the rolling elements. ➤176|15 shows rolling bearings that can be used as non-locating bearings.

15
Axial location of bearing rings in non-locating bearings

= the means of location must prevent axial creep of the ring
= the means of location must support significant axial forces

① *Cylindrical roller bearing NU*
② *Deep groove ball bearing*
③ *Spherical roller bearing*
④ *Barrel roller bearing*
⑤ *Two single row angular contact ball bearings, adjusted in a pair*

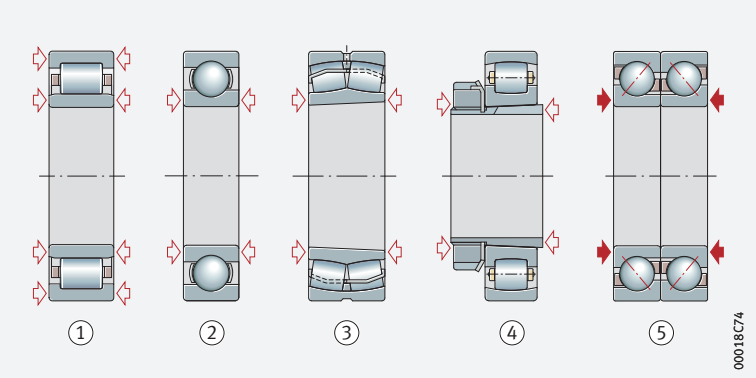

Cylindrical roller bearing NU

The cylindrical roller bearing NU is designed such that the inner ring can be displaced relative to the roller and cage assembly. For this reason, both bearing rings must also be secured against axial creep on both sides.

Deep groove ball bearing

In the deep groove ball bearing, only the inner ring is located, while the outer ring is axially retained by the rolling elements.

Spherical roller bearing, barrel roller bearing, angular contact ball bearings

In the spherical roller bearing and barrel roller bearing, as well as in the angular contact ball bearing pair, the outer ring is guided axially by the rolling elements. The inner ring of the barrel roller bearing is located on the shaft with or without an adapter sleeve. Location by means of an adapter sleeve secures the bearing against lateral creep.

Adjusted single row angular contact ball bearings

In the adjusted pair of single row angular contact ball bearings, the inner rings are clamped against each other so that they are not forced apart by the axial component of the radial force.

Adjusted or floating bearing arrangement

The bearings can support axial loads in one direction only

Bearings mounted in an adjusted and floating arrangement can support axial load in one direction only; this also applies to single direction axial bearings. The axial forces are supported by shaft or housing shoulders, snap rings, covers etc.

Angular contact ball bearing, cylindrical roller bearing

The angular contact ball bearing in ➤177|16 supports axial forces in one direction only. The bearing rings therefore only require abutment on one side each in accordance with the force pattern.
The axial force component is supported by an additional bearing in a mirror image arrangement. Similar conditions are present in the cylindrical roller bearing NJ.

Axial deep groove ball bearing

The balls in the axial deep groove ball bearing in ➤177|16 only roll correctly if the bearing runs clearance-free and with adequate minimum load.

If the shaft is horizontal, a further adjustable bearing must be provided. This is particularly important in the case of high speeds. If the shaft is vertical, the opposing bearing can be omitted if the bearing is adjusted clearance-free by the load in all operating states.

16
Axial location of the bearing rings in bearings in an adjusted or floating bearing arrangement

= *the means of location must support significant axial forces*

① *Angular contact ball bearing*
② *Cylindrical roller bearing NJ*
③ *Axial deep groove ball bearing*

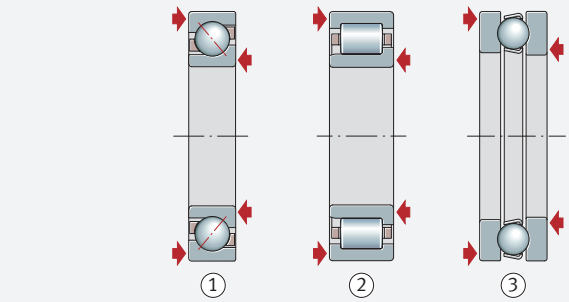

Examples of the axial fixing of bearing rings

Axial location of bearing rings

➤*177*| *17* to ➤*181*| *24* show possibilities for the location of bearing rings depending on the design of the bearing arrangement and the application.

Locating/non-locating bearing arrangement

Deep groove ball bearing and cylindrical roller bearing

➤*177*| *17* shows the bearing arrangement of the shaft in an electric motor of medium power rating.

Locating bearing A

The locating bearing A is subjected not only to radial forces but also to axial forces of alternating direction. The axial forces are not very high and do not act in a shock type manner. For location of the deep groove ball bearing, rigid shoulders, covers, snap rings or other form fit elements are therefore normally used. The adjacent parts should require little production work and mounting and dismounting should be easy to perform.

Non-locating bearing B

The non-locating bearing B must support radial forces only. The outer ring is clamped between the snap ring and cover, while the inner ring has a tight fit on the shaft.

17
Axial location of deep groove ball bearing and cylindrical roller bearing

A = *locating bearing*
B = *non-locating bearing*

① *Deep groove ball bearing*
② *Cylindrical roller bearing NU*
③ *Snap ring*
④ *Spacer ring*
⑤ *Cover*

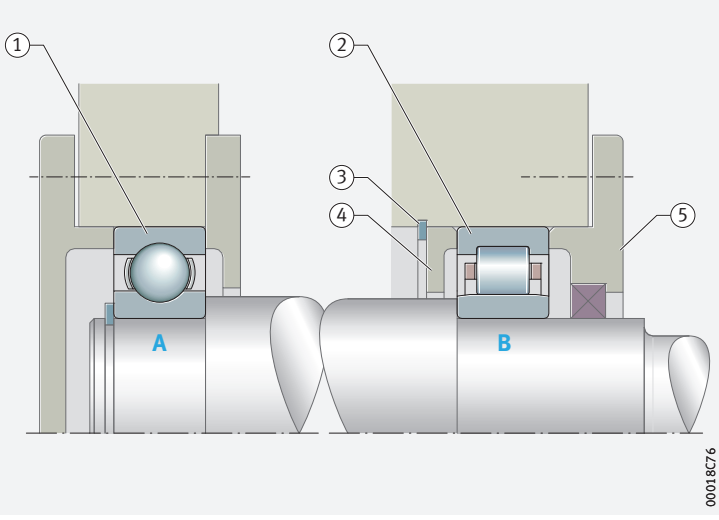

Locating/non-locating bearing arrangement

✎ *Tapered roller bearing pair and cylindrical roller bearing*

The bearing arrangement of a pinion shaft shown in ➤ *178*| *18* is subjected to high, occasionally shock type radial and axial forces. Due to the hypoid tooth set, precise axial adjustment of the pinion against the crown gear and rigid guidance are necessary.

✎ *Locating bearing A*

The locating bearing A is formed by the tapered roller bearing pair clamped from within. Since spacer rings are arranged between the inner rings, the shaft nut can be tightened to a certain torque without leading to bracing of the bearing arrangement. The axial position of the pinion relative to the crown gear is set by means of shims at the time of mounting.

✎ *Non-locating bearing B*

The non-locating bearing B must support radial forces only. Due to the magnitude of the forces, both rings have tight fits. A snap ring in one annular slot of the outer ring securely prevents creep of the bearing to the left. The ribs of the bearing rings represent additional security against creep to the right. In order to prevent jamming of the bearing arrangement, the non-locating bearing must have axial clearance between the inner ring rib and the rollers.

18
Axial location of tapered roller bearing pair and cylindrical roller bearing

A = *locating bearing*
B = *non-locating bearing*

① *Pair of tapered roller bearings*
② *Cylindrical roller bearing*
③ *Snap ring*
④ *Spacer ring*
⑤ *Shims*
⑥ *Shaft nut*

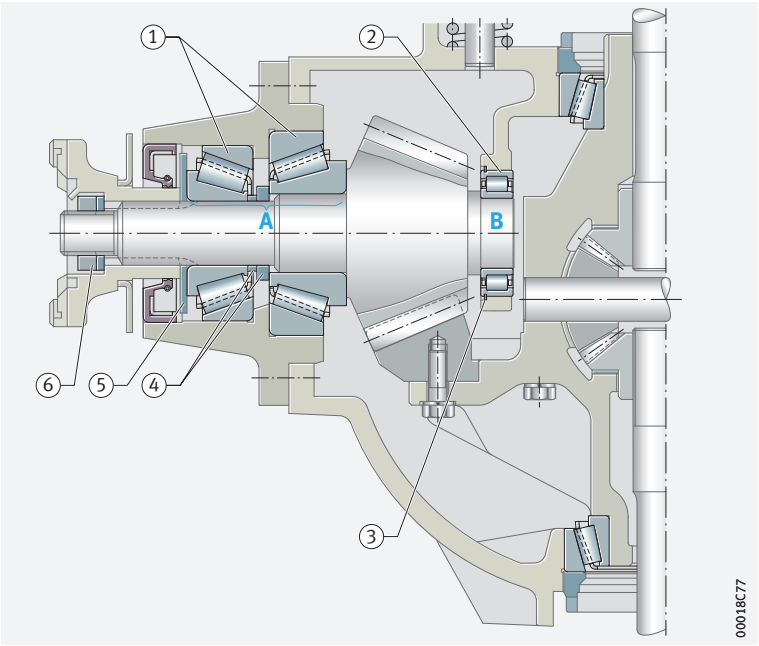

Cylindrical roller bearing and axial deep groove ball bearing

Locating bearing arrangement

The locating bearing in ➤*179*|*19* is subjected to high axial forces in both directions and the shaft must be guided axially clearance-free.

The shaft locating washer of the double direction axial deep groove ball bearing and the inner ring of the cylindrical roller bearing are axially clamped by means of an end washer. The axial deep groove ball bearing is adjusted clearance-free by means of the intermediate ring inserted with a fit.

19

Axial location of axial deep groove ball bearing and cylindrical roller bearing

① *Housing locating washer of axial deep groove ball bearing, double direction*
② *Cylindrical roller bearing NU*
③ *Spacer ring*
④ *Intermediate ring inserted with fit*
⑤ *End washer*
⑥ *Shaft locating washer of axial deep groove ball bearing*

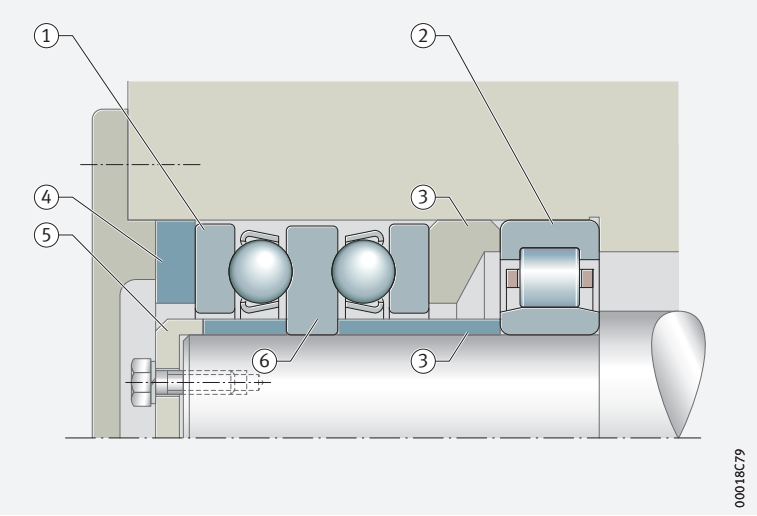

Spherical roller bearing

Locating bearing arrangement

➤*179*|*20* shows the locating bearing for a conveyor sheave. In order that the bearing can be mounted and dismounted with ease, a withdrawal sleeve is used to locate the inner ring, which is pressed in using a hydraulic mounting method. The taper on the withdrawal sleeve is self-retaining. The end cap serves as a retainer only.

20

Axial location of spherical roller bearing with withdrawal sleeve

① *Spherical roller bearing*
② *Cover*
③ *Withdrawal sleeve*
④ *End cap*
⑤ *Spacer bush with labyrinth passages*

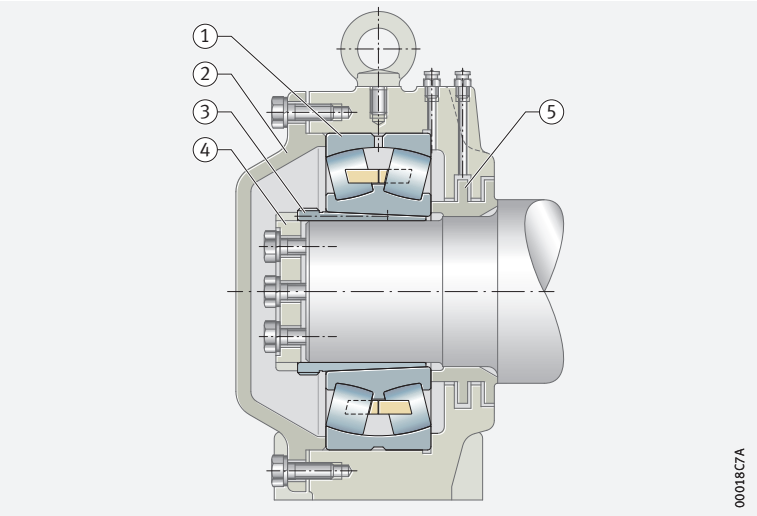

Locating bearing arrangement for vertical shaft

✎ *Radial deep groove ball bearing and axial deep groove ball bearing*

The vertical shaft in ➤*180*|*21* is radially guided by a radial deep groove ball bearing and axially supported by an axial deep groove ball bearing. Disc springs fixed by means of a snap ring give axial preload of the bearing, thus ensuring the minimum load for the guidance bearing. There is some axial clearance between the disc spring when pressed flat and the snap ring. This gives easier mounting of the snap ring. In order to ensure a minimum load for the axial bearing in the event of thrust reversal, biasing springs are attached to the housing locating washer.

21

Axial location of an axial and radial deep groove ball bearing with a vertical shaft

① *Radial deep groove ball bearing*
② *Axial deep groove ball bearing*
③ *Snap ring*
④ *Disc spring*
⑤ *Helical compression spring*

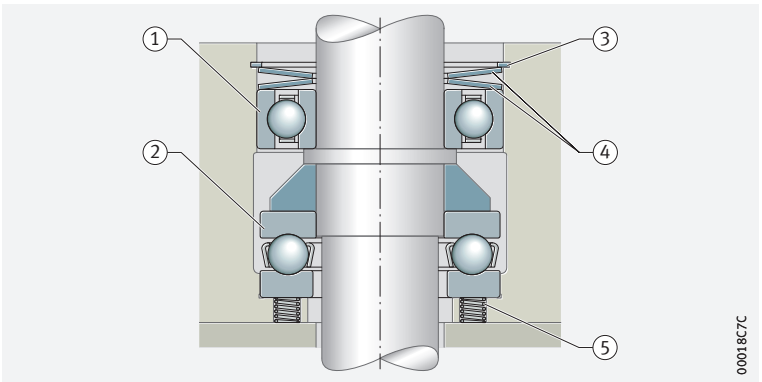

Non-locating bearing arrangement

✎ *Spherical roller bearing, location by adapter sleeve*

The locating bearing in ➤*180*|*22* must support high radial loads. When the adapter sleeve is tightened, this gives the bearing on the smooth shaft a tight fit, which prevents axial creep.

22

Axial location of spherical roller bearing with adapter sleeve

① *Spherical roller bearing*
② *Locknut with tab washer*
③ *Adapter sleeve*

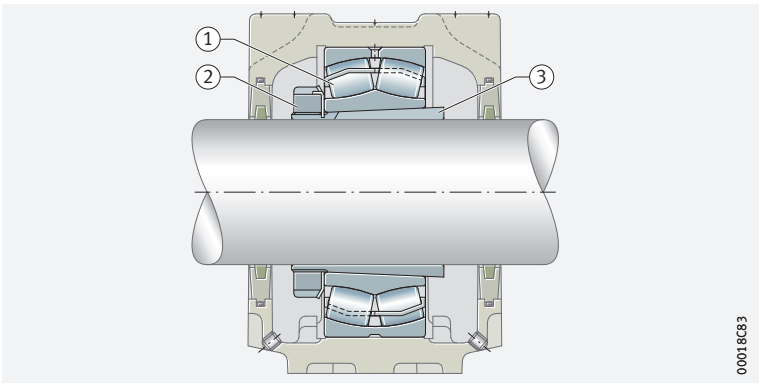

Adjusted bearing arrangement

✎ *Tapered roller bearing pair, bearings in O arrangement, outer rings with tight fit*

In wheel bearing arrangements with a rotating outer ring in accordance with ➤*181*|*23*, not only are high radial and axial forces present but tilting moments also occur. The outer rings have a tight fit. In these sorts of hub bearing arrangements, this is important due to the circumferential load acting on the outer rings. The axial clearance of the bearing group is set by means of the fixing nut, where the loosely fitted inner ring of the outer bearing undergoes displacement.

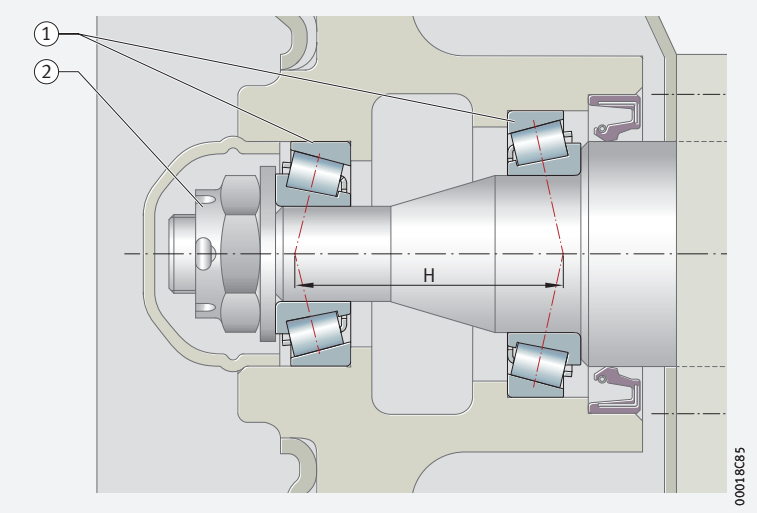

23
Axial location of tapered roller bearing pair

H = *support spacing*

① *Tapered roller bearing pair, O arrangement*

② *Fixing nut*

Adjusted bearing arrangement with spring washer

✎ *Deep groove ball bearings*

The example in ➤*145*|*7* shows a bearing arrangement that is commonly used in small electric motors. The bearings are not subjected to high loads, the speed is in the moderate range. The radial load is small and only guidance forces must be supported in an axial direction.

✎ *Inner rings with tight fit, outer rings with sliding seat, bearings adjusted by means of spring preload*

The inner rings of the deep groove ball bearings have a tight fit on the journal and are abutted on the shaft shoulders. The outer rings have a sliding seat. A spring washer is fitted between the outer ring of the right hand bearing and the cover collar. The bearings are axially adjusted by the tensioned springs. This achieves particularly smooth running.

Floating bearing arrangement

✎ *Spherical roller bearings*

➤*181*|*24* shows the bearing arrangement of a heavy support roller. The bearings are subjected to high radial loads. In addition, a frictional force acts axially on the outside surface of the support roller. Close axial guidance is not required and, as a result, a floating bearing arrangement can be selected. In the course of this, the lateral movement of the outer rings is restricted by the contact in the housing. Both housings are split. The axial displacement distance s can be measured with the upper section removed.

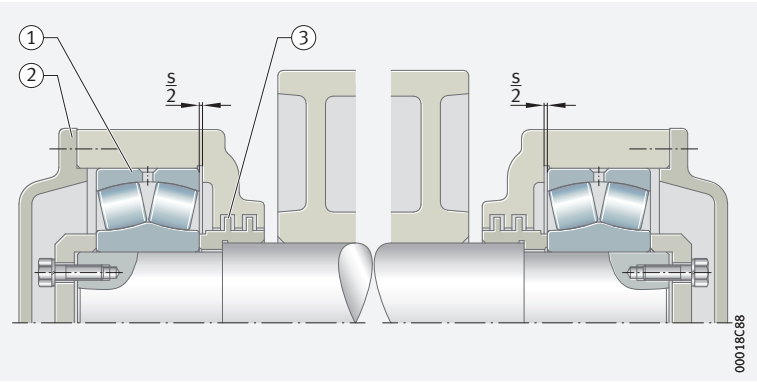

24
Axial location of two spherical roller bearings

s = *axial displacement distance*

① *Spherical roller bearing*

② *Cover*

③ *Spacer bush with labyrinth passages*

8.8 Raceways with direct bearing arrangement

The raceways must be produced as a rolling bearing raceway

In rolling bearings without an inner ring, the rolling elements run directly on the shaft, while in bearings without an outer ring they run directly in the housing bore. The shaft and/or housing bore must therefore be produced as a rolling bearing raceway; steels, surface hardness and hardening depth ➤*182*.

The raceways must be free of waviness and precision machined (grinding and honing); for design of raceways see product chapter.

The fits have a major influence on the bearing clearance

The shaft and housing fits have a considerable influence on the bearing and operating clearance of the rolling bearing; this must be taken into consideration in determining the tolerances.

Steels for the raceways

Through hardening steels

Through hardening steels in accordance with ISO 683-17 (e.g. 100Cr6) are suitable as materials for rolling bearing raceways in direct bearing arrangements. These steels can also be surface layer hardened.

Case hardening steels

Case hardening steels must correspond to DIN EN ISO 683-17 (such as 17MnCr5, 18CrNiMo7-6) or DIN EN ISO 683-3 (such as 16MnCr5).

Steels for inductive surface layer hardening

For flame and induction hardening, steels in accordance with DIN EN ISO 683-17 (e.g. C56E2, 43CrMo4) or DIN 17212 (e.g. Cf53) should be used.

Surface hardness and hardening depth of raceways

Nominal surface hardness: 670 HV to 840 HV

The hardness values apply to raceways, axial washers and shaft shoulders. Steels hardened by means of case, flame or induction hardening must have a surface hardness of 670 HV to 840 HV and an adequate hardening depth CHD or SHD.

Determining CHD and SHD

The requisite case hardening depth CHD for case hardening steels is determined in accordance with ➤*183*| *5*, while the requisite surface hardening depth SHD for steels for induction surface layer hardening is determined in accordance with ➤*183*| *6*.

Nominal hardening depth ≧ 0,3 mm

In accordance with DIN ISO 15787:2018, the hardening depth is the depth of the hardened surface zone at which there is still a hardness of 550 HV 1. It is measured on the finish ground raceway and must correspond to the stated values, but must in any case be ≧ 0,3 mm.

Determining the case hardening depth

Approximation value for case hardening depth

The reference value for the load present is the equivalent stress in accordance with the distortion energy hypothesis (DEH) as a function of the rolling element diameter D_w and the magnitude of the load.

For calculation of the case hardening depth CHD, the following applies:

f 5
Case hardening depth

$$CHD \geqq 0{,}052 \cdot D_w$$

Legend

CHD	mm	Case hardening depth
D_w	mm	Rolling element diameter.

The local hardness must always be above the local requisite hardness, which can be calculated from the equivalent stress.

25
Case hardening depth and hardness profile

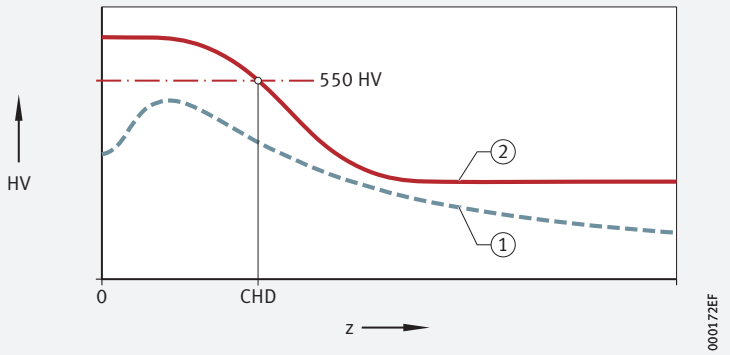

HV = *hardness according to Vickers*
z = *depth under the contact surface*
① *Requisite hardness (equivalent stress profile)*
② *Actual hardness profile*

Determining the surface hardening depth

In these surface hardening methods, the load and contact geometry must be taken into consideration when determining the requisite hardening depth.

For the calculation of the surface hardening depth SHD applies:

f 6
Surface hardening depth

$$SHD \geqq 140 \cdot D_w / R_{p0,2}$$

Legend

SHD	mm	Surface hardening depth
D_w	mm	Rolling element diameter
$R_{p0,2}$	N/mm^2	Yield point of base material.

Raceway hardness of less than 670 HV

If the raceway fulfils the requirements for rolling bearing materials but the raceway hardness is less than 670 HV (58 HRC), the static and dynamic load carrying capacity of the bearing is reduced. In order to determine the dynamic and static load carrying capacity of the bearing arrangement, the basic dynamic load rating C of the bearings must be multiplied by the reduction factor f_H (dynamic hardness factor) and the basic static load rating C_{0r} by the reduction factor f_{H0} (static hardness factor).

26
Dynamic hardness factor for raceway hardness values of less than 670 HV

f_H = *dynamic hardness factor*
HV, HRC = *surface hardness*

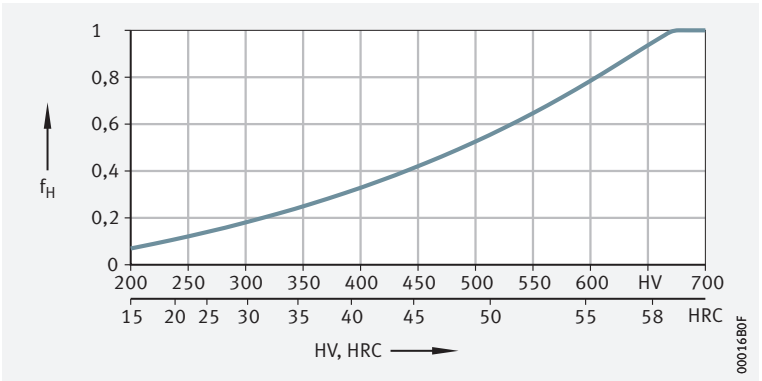

27
Static hardness factor for raceway hardness values of less than 670 HV

f_{H0} = *static hardness factor*
HV, HRC = *surface hardness*

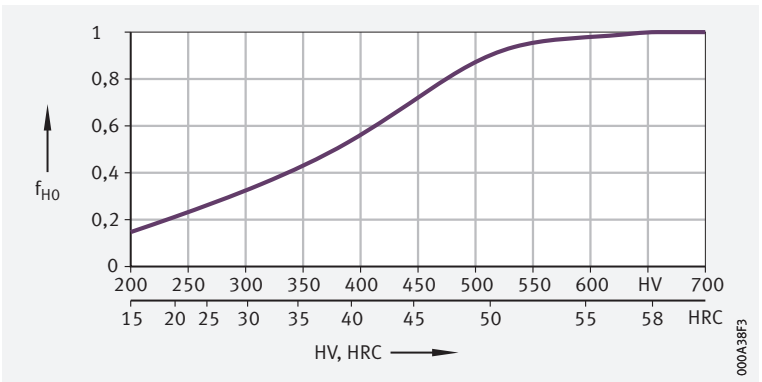

9 Sealing of bearing positions

Sealing has a decisive influence on the function and operating life of a bearing

In order to make optimum use of the potential life of a rolling bearing, the egress of lubricant (grease, oil) must be reliably prevented and the bearing must be securely protected against the ingress of solid and liquid contaminants (e.g. dust, sludge, water, cleaning liquid) ➤185| 1.

1
Principle of a sealing position

① *Lubricant*
② *Seal*
③ *Contaminants*

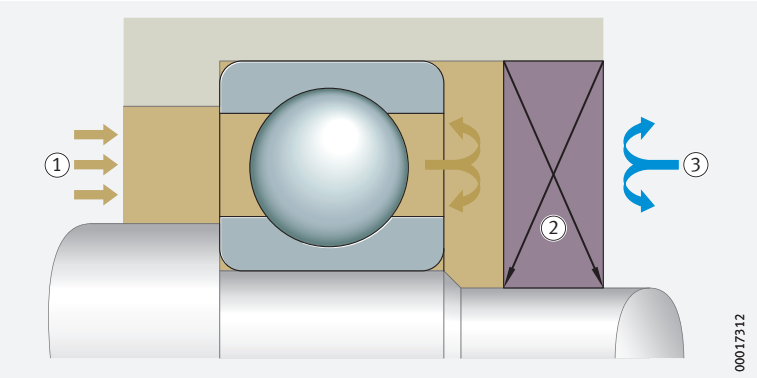

Contaminant particles can damage the bearing

If contaminant particles enter the bearing, overrolling of the particles at the rolling contact forms indentations that cause running noise and may constitute initial points for rapidly propagating material fatigue.

Contaminants with an abrasive action

Where contaminants that have an abrasive action are present in the bearing, the rolling contact surface partners undergo wear and there is a progressive increase in the bearing clearance. With an increasing operating duration, the running accuracy of the bearing in particular is reduced until it fails.

Liquid and vaporous media

If liquid or vaporous media enter the bearing, the lubrication conditions at the rolling contacts are disrupted. If corrosive media are present, oxidative damage of the surfaces will also occur. Both of these situations lead to a considerable reduction in the operating life of bearings.

Effective sealing of the bearing position is thus decisive for the long operating life of a rolling bearing.

Non-contact or contact seals

A basic distinction is made between contact and non-contact seals in the adjacent construction and the bearing.

9.1 Non-contact seals

Non-contact seals are free from friction

Non-contact seals are particularly suitable for applications with high speeds and high requirements for freedom from friction and low heat generation. They are free from friction, except for a small amount of lubricant friction in the sealing gap. In general, non-contact seals are free from wear and have an almost unlimited operating life.

Measures which prevent the ingress of liquids into the bearing while stationary

In order to prevent the ingress of liquids while stationary, additional sealing measures are necessary, such as the supply of barrier media. Where higher requirements for sealing integrity are present, a relatively large design envelope is required for labyrinth designs.

Grease sealing by means of baffle plates and sealing shields

Stationary baffle plates prevent the egress of grease

In the case of grease-lubricated bearings, the egress of grease can be prevented in many cases on the stationary bearing ring by the use of simple baffle plates. Depending on the mounting and operating situation, the plates are braced on either their outer or inner edge ➤*186*|*2*. The grease collar that forms at the sealing gap gives protection against slight contamination impact from outside.

Compact solutions in the form of bearings with sealing shields integrated on one or both sides

For designs in which there is no space adjacent to the bearing for a seal, there are rolling bearings with sealing shields integrated on both sides ➤*186*|*2*; see product chapter. These bearings are supplied with a grease charge. Bearings with only one sealing shield on one side are also commercially available.

2
Baffle plates and integrated sealing shields

① *Baffle plate braced on outer edge*
② *Baffle plate braced on inner edge*
③ *Sealing shields integrated on both sides*

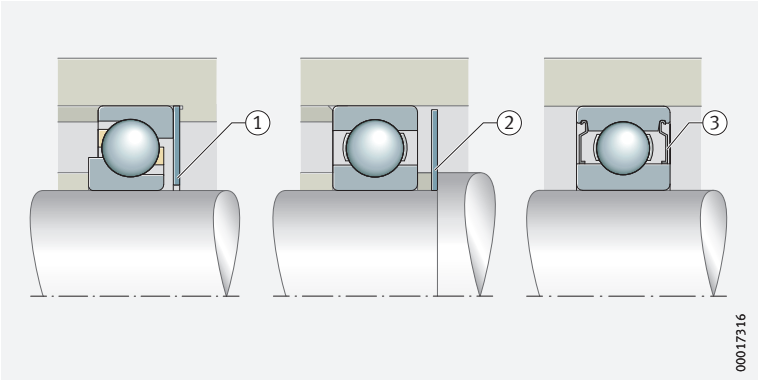

Gap seals

Narrow gap between shaft and housing

A narrow gap between the shaft and housing is a simple and, in many cases, adequate means of sealing against the egress of grease and slight contamination impact from outside ➤*186*|*3*. The sealing gap can be held to a relatively narrow size.

Grooves in the housing increase the sealing action if grease lubrication is used

If grease lubrication is used, the sealing action of the gap can be increased by several grooves in the through bore of the housing ➤*186*|*3*.
The grooves act as storage chambers and hinder the ingress of contaminants as well as the egress of lubricant.

Helical grooves are used for oil return

Where oil lubrication is used and the shaft is horizontal, the through bore in some housings has a helical groove ➤*186*|*3*. Depending on the spiral direction relative to the rotational direction of the shaft, oil creeping along the shaft is returned to the housing or contaminants are transported from the gap to the outside. A similar sealing action is achieved if the helical groove is located on the shaft.

3
Gap seals

① *Gap seal*
② *Gap seal, grooves in the bore*
③ *Gap seal, helical grooves in the bore*

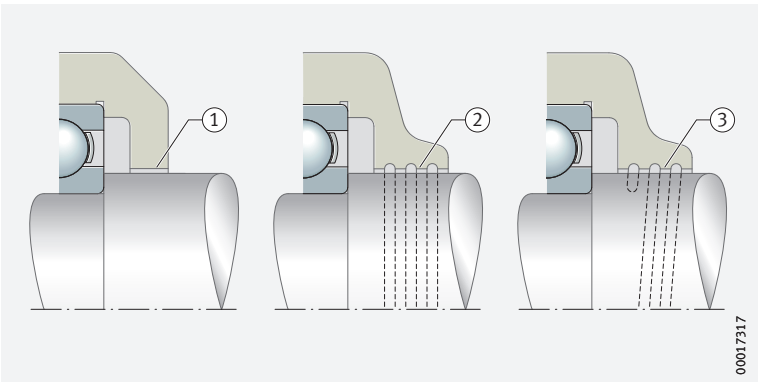

Splash rings and flinger shields

The sealing action is achieved by means of rotation and centrifugal force displacement

In the case of splash rings and flinger shields, sealing action is achieved by means of rotation and centrifugal force displacement ➤187| 4 and ➤187| 5. Splash rings can give effective sealing, for example, where oil lubrication is used and the shaft is horizontal ➤187| 4. The oil creeping along the bush is propelled away by the splash rings and flows back into the housing via a drain hole.

The sealing gap is protected by an outer flinger shield

If heavy contamination impact or direct impact by liquids is expected at the sealing position, the sealing gap can be protected on the outside by means of a flinger shield ➤187| 5. The same purpose is fulfilled by a simple rubber shield that – without additional means of location – is seated under tension on the shaft or shaft bush ➤187| 5. At higher speeds, however, there is a risk that the rubber shield will become detached from the shaft under the influence of centrifugal force. For this reason, vulcanised flinger shields with sheet metal reinforcement are available that are used very effectively in, for example, passenger car wheel bearing units of the 1st Generation or shaft support bearings ➤187| 5.

4
Splash rings

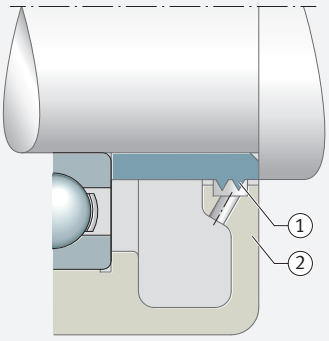

① *Splash rings*
② *Housing with collector groove and drain hole*

5
Flinger shields

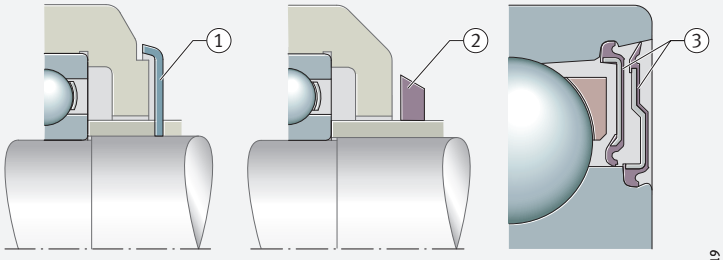

① *Sheet metal shield as flinger shield*
② *Simple rubber shield as flinger shield*
③ *Flinger shield with sheet metal reinforcement in bearing unit with sealing washer*

Labyrinth seals

Protective or collector labyrinths provide very good sealing results

A considerably greater sealing action than with gap seals is achieved by labyrinths incorporating gaps filled with grease. A distinction is made between protective labyrinths and collector labyrinths.

Protective labyrinths

Protective labyrinths are centrifugal force seals. They protect sealing positions subjected to little external load due to liquids against the egress of grease and the ingress of contamination.

Collector labyrinths

Collector labyrinths are labyrinths of highly complex design with collector grooves and drain holes in the housing that are also suitable for the sealing of sealing positions subjected to very high impact by liquids.

Labyrinths are configured with radially or axially aligned crosspieces

Depending on the contamination load, labyrinths are configured with one crosspiece or several crosspieces ➤*188*|*6*. Labyrinths with several radially aligned crosspieces are only considered, for reasons of mounting, for split housings ➤*188*|*6*. Their advantage is that the grease propelled outwards is held in U-shaped housing slots, which thus improves the sealing action.

In order to improve sealing, labyrinths are frequently filled with grease

In practice, labyrinths filled with grease are frequently used in order to achieve better sealing against contamination. In a highly contaminated environment, fresh grease is occasionally pressed into the sealing gap, which has the effect of pressing contaminated grease out of the sealing position.

If significant angular deviations of the shaft are expected in the case of spherical roller bearings, for example, there is a risk that grazing of the crosspieces will occur in labyrinths in accordance with ➤*188*|*6*. In this case, labyrinths with bevelled crosspieces are used. The bevel is matched to the motion about the centre point of the bearing ➤*188*|*6*.

6
Examples of labyrinth seals

① *Labyrinth with axially aligned crosspieces*
② *Labyrinth with radially aligned crosspieces*
③ *Labyrinth with bevelled crosspieces*
④ *Taper type lubrication nipple to DIN 71512-A with integrated protective labyrinth*

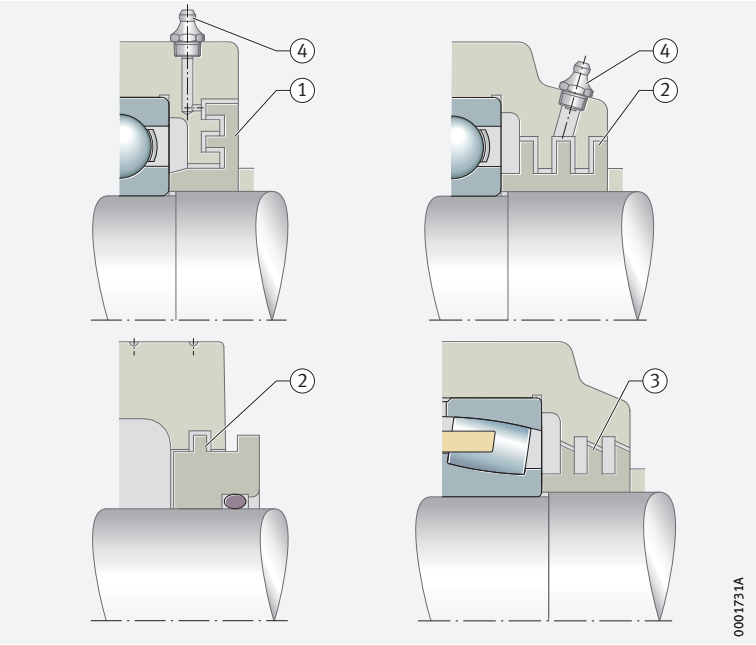

7
Labyrinth seals integrated in the bearing

① *Bearing with integrated protective labyrinth*
② *Bearing with rubberised sealing shield as protective labyrinth*

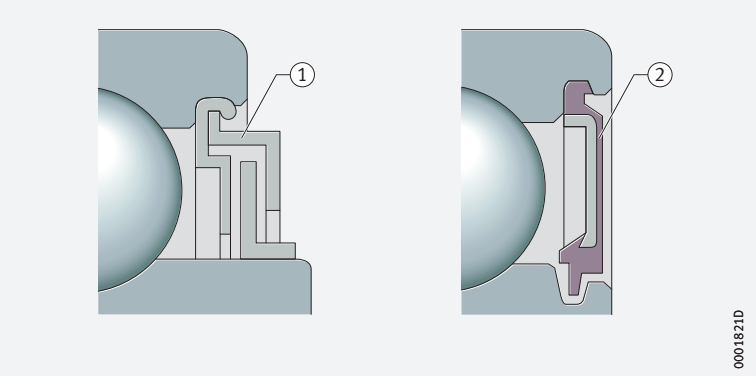

Collector labyrinths

Where there is heavy liquid impact and sealing positions are inundated by surge flows, so-called collector labyrinths are used. These seals effectively repel liquids if the sealing position is not subjected to prolonged inundation while stationary.

9.2 Contact seals

The contact pressure at sliding contact causes friction in contact seals at the sliding surface

Contact seals are in contact at their sliding surface under a certain contact pressure. In many cases, they represent the most favourable solution in terms of design envelope and costs. The general disadvantage, however, is the loss of energy due to friction at the sealing contact.

Felt ring seals

Felt rings are simple sealing elements used with grease lubrication

Felt rings are simple sealing elements that have proved effective primarily with grease lubrication ➤ 189 | 8. After a short running-in time, the felt forms a sealing surface in preload-free contact with excellent sealing action against dust. Before mounting, the rings are soaked with oil.

8
Felt ring seals

① *Felt rings, arranged individually or adjacent to each other*

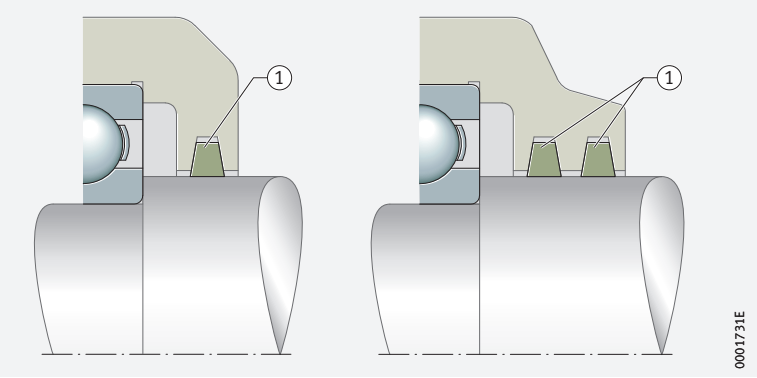

Several felt rings can also be arranged adjacent to each other

A felt ring is sufficient if the level of contamination is not too high. If the environmental conditions are less favourable, several felt rings can be arranged adjacent to each other.

Operating temperatures up to +100 °C are possible. At higher temperatures, sealing rings made from wound yarns are required that comprise PTFE, graphite or aramide and glass fibres, and are impregnated with PTFE or graphite.

The dimensions of felt rings and annular slots are standardised and stated in DIN 5419.

Metallic sealing washers

Sealing washers made from thin sheet metal provide good sealing for grease lubrication

When using grease lubrication, effective sealing can also be achieved by axially sprung metallic sealing washers ➤ 190 | 9. These thin sheet metal seals are braced in the end face of the inner ring or outer ring and are in spring contact with the other bearing ring. In order to prevent fretting of the seal tongues during running-in, these washers are greased before mounting.

Metallic sealing washers are suitable if no static or pressure-resistant sealing is required

At the sealing contact, the sprung sealing washer beds into the bearing ring during the running-in process and the preload decreases. A groove is formed in the bearing ring that, together with the seal edge, forms a small "microlabyrinth" under light contact. Due to this principle, these seals are suitable for bearing positions that require no static or pressure-resistant sealing of the bearing.

In washers in double arrangements, the intermediate space is filled with grease

In addition to simple sprung sealing washers, there are also washers in double arrangements. The intermediate space is additionally filled with grease at the mounting stage. Due to their small section width, these seals can normally be fitted retrospectively and without design modifications to the adjacent construction.

9
Metal sealing washers

① *Sealing washers braced on inner ring*
② *Sealing washers braced on outer ring*
③ *Sealing washers in double arrangement*

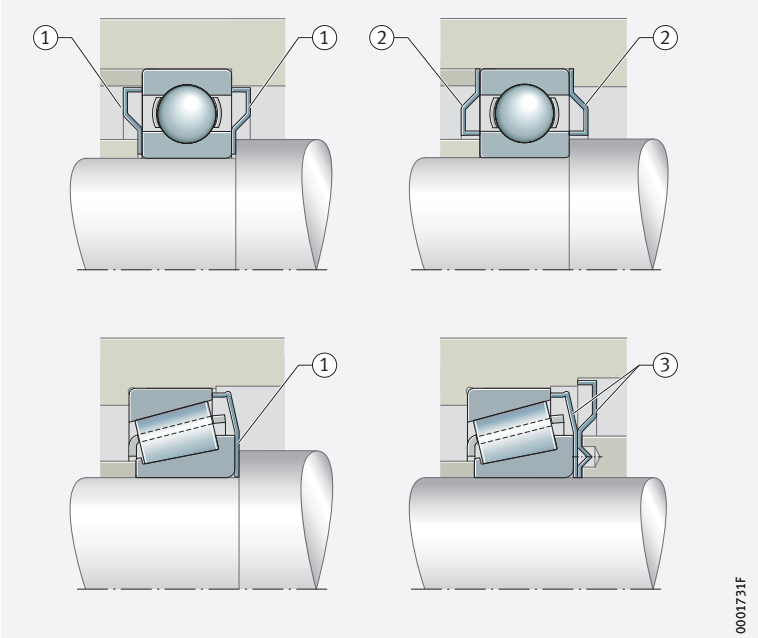

Sealing washers with elastomer seal lip

Sealing washers integrated in the bearing are used for small design envelopes

Where the design envelope is small, rolling bearings (ball bearings or roller bearings such as spherical roller bearings) with integrated sealing washers are frequently used; see product chapter. These sealing washers comprise a sheet metal washer for reinforcement and have a vulcanised elastomer seal lip.

Various elastomers are available for selection

Various elastomers can be selected in accordance with the chemical and thermal requirements. In general, nitrile butadiene rubbers NBR are used. For applications with higher temperatures or speeds, sealing washers with lips made from fluoroelastomers FKM are frequently used.

The seal lip can be in radial or axial contact

Sealing washers are available with seal lips for radial or axial contact ➤ *191* | *10*. They are suitable for sealing against loss of grease and ingress of contamination at low pressure differentials.

Sealing washers with one or more radial seal lips are also suitable for the sealing of rolling bearings with axial relative motion between the inner ring and outer ring (e.g. in spherical roller bearings).

Sealing washers with seal lips in axial running contact are used primarily in bearings with lower axial operating clearance (e.g. in deep groove ball bearings).

Sealing washer RSD with radial sealing action

Sealing washers RSD have a seal lip with radial sealing action and are characterised by low seal friction ➤ *191* | *10*. The seal lip is initially in very light contact with the shaft (little or no contact pressure). After running-in, a minimal sealing gap is created.

Sealing washer RSR with radial contact

Seals RSR with radial contact are equipped with a seal lip geometry that is similar to a rotary shaft seal ➤ *191* | *10*. The angles of the seal edge are selected such that the pumping action at the sealing contact repels liquids outwards and a small amount of grease is conveyed under the seal edge in order to lubricate the seal lip.

Sealing washer for axial inward sealing

In the case of sealing washers for axial sealing, an additional outer seal lip is often provided ➤ *191* | *10*. The outer seal lip (protective lip) is of a non-contact design and, together with the undercut on the inner ring, forms an additional protective labyrinth against the ingress of contamination.

Sealing washer for axial outward sealing

A seal geometry that is designed in particular for applications with a rotating outer ring and high requirements for retention of the grease is the sealing washer with a seal lip in axial contact in accordance with ➤*191*|*10*. This seal has increased sealing action against the egress of grease. An additional non-contact lip that repels the grease provides a grease chamber in front of the main seal lip for axial outward sealing.

10
Sealing washers with elastomer seal lips

① *Sealing washer RSD*
② *Sealing washer RSR*
③ *Sealing washer for axial inward sealing with additional external seal lip*
④ *Sealing washer for axial outward sealing*

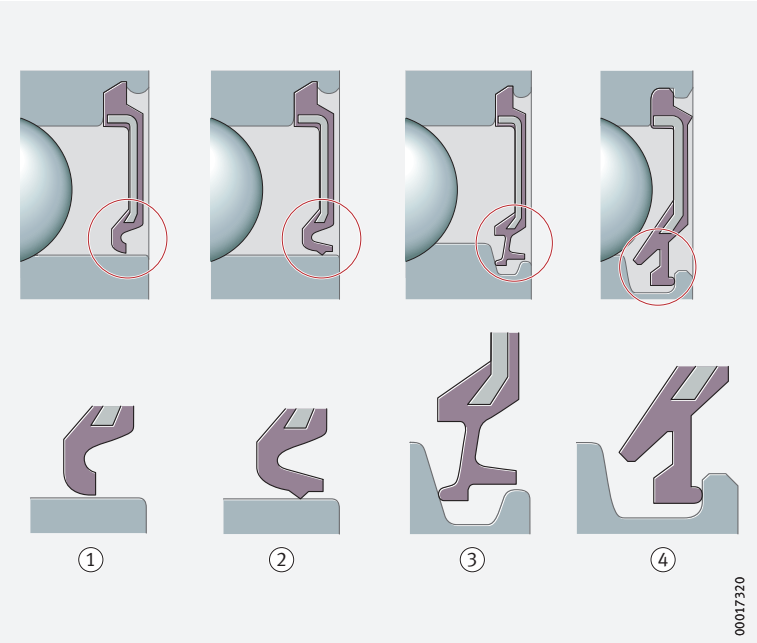

Lip seals

Lip seals provide radial or axial sealing

Lip seals are seals with one or more seal lips that give axial or radial sealing. These seals are predominantly elastomer seals. Typical designs are shown in ➤*191*|*11* to ➤*192*|*13*.

Double lip seal: the inner seal lip prevents egress of lubricant, the outer seal lip prevents ingress of contamination

➤*191*|*11* shows a double lip seal made from NBR for use in standard plummer block housings. The radially split seal can be easily inserted in the annular slot in the housing. Ingress of contamination is prevented by the outer seal lip, while the inner seal lip prevents the egress of lubricant. The grease between the two seal lips supports the sealing action.

11
Double lip seal for plummer block housings

① *Radially split double lip seal*

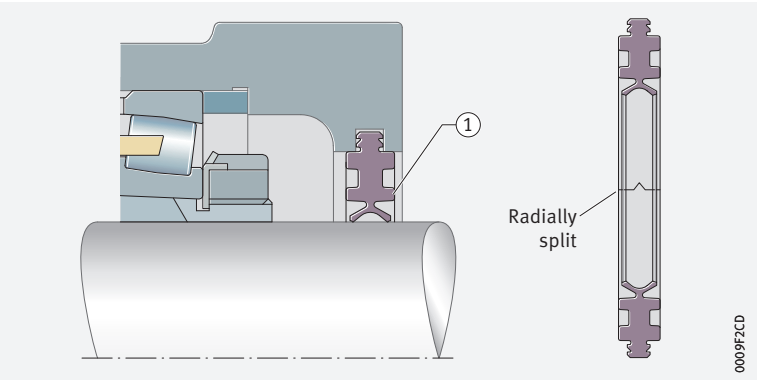

V-ring seals are lip seals with axial sealing action

The V-ring is a lip seal with axial sealing action ➤*192*|*12*. The ring is made from elastic rubber NBR. During mounting, it is stretched and slid onto the shaft so that the seal lip is in contact with the housing wall.

At circumferential velocities over 12 m/s, experience shows that the V-ring must be radially located so that it does not become detached due to centrifugal force. Precise circumferential velocities for specific applications must always be agreed in consultation with the sealing ring manufacturer.

12
V-ring seal

① *V-ring seal as protective seal*
② *V-ring for grease sealing in labyrinth*

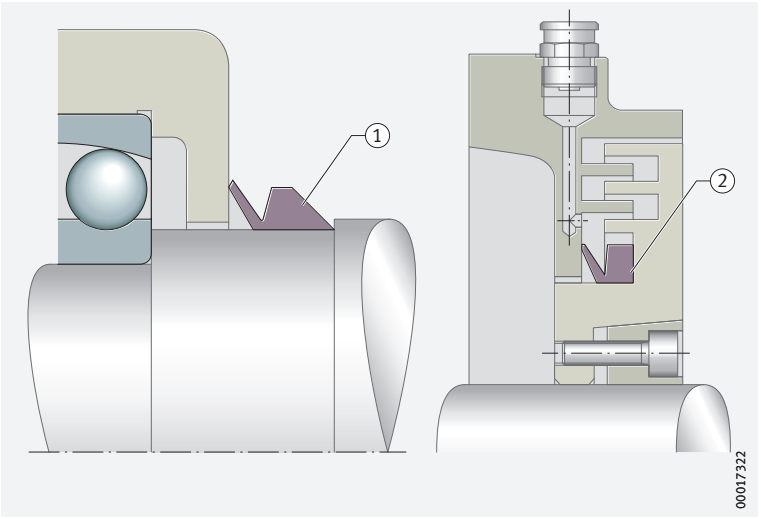

Lip seals of three-part construction

Lip seals of a three-part construction with single or multiple lips (comprising an NBR sealing element between two sheet steel washers) are used, for example, in radial insert ball bearings ➤*192*|*13*.

The outer sheet steel washer protects the seal lips against damage

During mounting, this sandwich construction allows concentric alignment of the rubber seal lip with the inner ring. The outer washer protects the seal lips effectively against damage caused by coarse contaminants.

13
Lip seals of sandwich construction with seal lip protection

① *Axially preloaded seal lip*
② *Radially preloaded seal lip*
③ *Three radially preloaded seal lips*

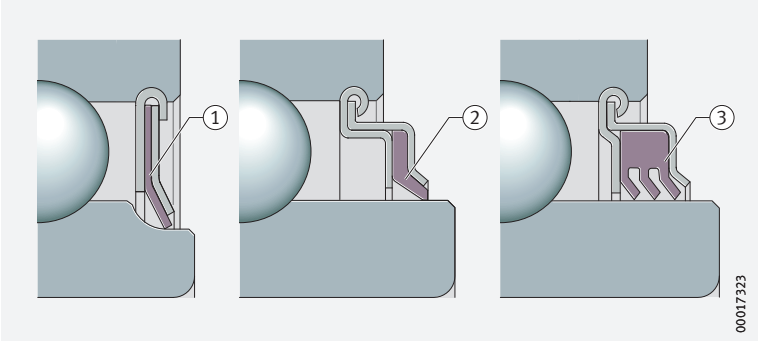

Rotary shaft seals

For oil sealing of rotating shafts, rotary shaft seals (RWDR) in accordance with DIN 3760 and DIN 3761 and with spring preload are suitable. Frequently used designs are shown in ➤*193*|*14*. The sealing rings are designed for applications with slight pressure differentials.

Speed limits for rotary shaft seals are given in DIN 3760.

With oil lubrication

Depending on the seal material and the surface structure of the shaft, the geometry of the seal lips generates a pumping action in the sealing gap towards the steep flank of the seal lip. The sealing ring is therefore mounted with the steep flank facing in the direction of the medium against which sealing is required.

With grease lubrication

In the case of grease lubrication, the steep flank of the RWDR is often placed in the direction of grease egress. As a result, some grease passes under the seal lip for lubrication of the sealing edge. The preload force of seal lips – in relation to their contact length – is normally 80 N/m to 150 N/m.

14
Rotary shaft seals

① *Type A*
② *Type AS*
③ *Type B*
④ *Type C*
⑤ *Type D*

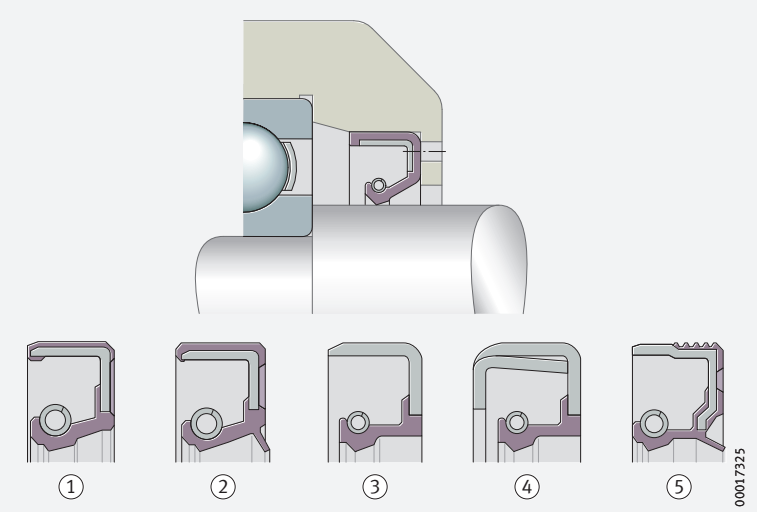

Springless Schaeffler sealing rings G, GR, SD

Schaeffler sealing rings are highly suitable for a small radial design envelope and in combination with needle roller bearings

Low-friction sealing of bearing positions with a small radial design envelope, such as bearing positions with needle roller bearings, can be effectively achieved using sealing rings G, GR and SD; see product chapter. These sealing rings can be used individually or in a double arrangement ➤193|15. In the double arrangement, one seal lip faces inwards to seal the lubrication medium, while the second seal lip faces outwards to give protection against contamination. In order to improve the protective function, the space between the seals can be filled with grease. With an extended inner ring, a sealing ring with the same outside diameter as the outer ring can be used, where the seal lip runs on the extended inner ring. Sealing rings give good protection against contamination and spray water as well as against the egress of oil and grease under slight pressure differentials. In order to reduce friction and protect the seal lip against damage, the sealing edge must be lubricated.

15
Schaeffler sealing rings

① *Single arrangement, bearing with extended inner ring*
② *Double arrangement, bearing with inner ring*
③ *G sealing ring*
④ *GR sealing ring*
⑤ *SD sealing ring*

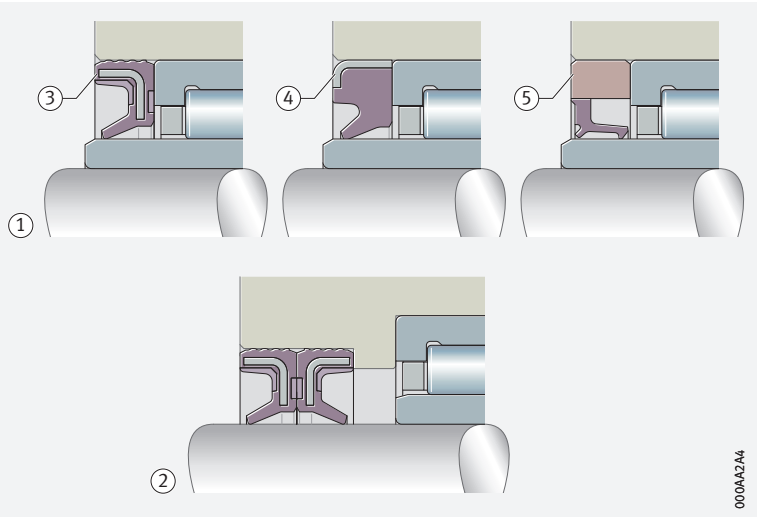

10 Mounting and dismounting

10.1 Handling

Rolling bearings, rolling bearing parts and Arcanol rolling bearing greases are high quality goods and must therefore be handled with care.

Storage of rolling bearings

Even slight deviations in functional areas will impair the performance capability of the bearings

The performance capability of modern rolling bearings lies at the boundaries of what is technically achievable. The materials, dimensional and running tolerances, surface quality and lubrication have been optimised for maximum levels of function, which means that even slight deviations in functional areas, such as those caused by corrosion, can impair the performance capacity. In order to realise the full performance capability of rolling bearings, it is essential to match the corrosion protection, packaging, storage and handling to each other.

Corrosion protection and packaging constitute part of the bearing

Corrosion protection and packaging constitute part of the bearing and are optimised such that they preserve all characteristics of the product at the same time as far as possible. In addition to protecting the surface against corrosion, this includes emergency running lubrication, friction, lubricant compatibility, noise behaviour, resistance to ageing and compatibility with rolling bearing components (cage and seal material).

Storage conditions for rolling bearings

As a basic prerequisite, parts must be stored in a closed storage area which cannot be affected by any aggressive media, such as exhaust gases from vehicles or gases, mist or aerosols of acids, lyes or salts. Direct sunlight should be avoided since, apart from the harmful effects of UV radiation, it can lead to wide temperature fluctuations in the packaging. The temperature should be constant and air humidity should be as low as possible. Extreme shifts in temperature and increased humidity lead to condensation.

Conditions for storing rolling bearings

The following conditions must be fulfilled:

- frost-free storage, i.e. a temperature of $> +5$ °C (this prevents formation of white frost, a maximum of +2 °C is permissible for up to 12 hours per day)
- maximum temperature +40 °C (to prevent excessive drainage of anti-corrosion oils)
- relative humidity $\leqq 65\%$ (with temperature changes, up to 70% permissible for up to 12 hours per day)

The temperature and humidity must be continuously monitored. This can be carried out using a datalogger. The measurements must be taken at intervals of no more than 2 hours. At least 2 measurement points must be selected: the highest point and the lowest point in the vicinity of an external wall at which the goods can be stored.

Storage periods for rolling bearings

Maximum storage period of 3 years

Rolling bearings should not be stored for longer than 3 years. This applies both to open and to greased bearings with sealing shields or washers. In particular, specifically greased bearings should not be stored for too long, since the chemical-physical behaviour of greases may change during storage. Even if the minimum performance capacity remains, the safety reserves of the grease may have diminished.



Check the bearings at the end of the storage period

In general, rolling bearings can be used even after their permissible storage period has been exceeded, if the storage conditions during storage and transport were observed. If the conditions are not fulfilled, shorter storage periods must be anticipated. If the periods are exceeded, it is recommended that the bearing be checked for corrosion, as well as for the condition of the anti-corrosion oil and the condition of the grease, before it is used. The aforementioned storage periods are empirical values based purely on practice and do not constitute an extension to the legal or, where applicable, contractually agreed warranty period.

Storage of Arcanol rolling bearing greases

The information on storage of rolling bearings applies as appropriate to Arcanol rolling bearing greases. The precondition is that the grease is stored in closed, completely filled original containers.

Storage periods for Arcanol rolling bearing greases

Rolling bearing greases do not have unlimited stability

Rolling bearing greases are mixtures of oil, thickener and additives. Such mixtures of liquid and solid substances do not have unlimited stability. During storage, their chemical-physical characteristics may change and they should therefore be used up as soon as possible.

The storage period for Arcanol greases is 3 years

If the storage conditions are observed, Arcanol greases can be stored without loss of performance for 3 years. As in the case of rolling bearings, however, the permissible storage period should not be seen as a rigid limit. If storage is carried out as prescribed, most greases can also be used after 3 years, if allowances are made for small changes. If there is any doubt when using older greases, random sample checking of chemical-physical characteristics is recommended in order to determine any changes in the grease. It is therefore not possible to state storage periods for containers that have been opened. If containers are to be stored after opening, the grease surface should always be brushed flat, the container should be sealed airtight and it should be stored such that the empty space is upwards. High temperatures should be avoided in all cases. The aforementioned storage periods are empirical values based purely on practice and do not constitute an extension to the legal or, where applicable, contractually agreed warranty period.

Unpacking of rolling bearings

Observe guidelines on unpacking

Perspiration leads to corrosion. Hands should be kept clean and dry and protective gloves worn if necessary. Bearings should only be removed from their original packaging immediately before assembly. If bearings are removed from multi-item packaging with dry preservation, the package must be closed again immediately, since the protective vapour phase is only effective in closed packaging.

Compatibility, miscibility

Observe guidelines on compatibility and miscibility

The anti-corrosion agents in bearings with an oil-based preservative are compatible and miscible with oils and greases having a mineral oil base. Compatibility should be checked if synthetic lubricants or thickeners other than lithium or lithium complex soaps are used. If there is an incompatibility, the anti-corrosion oil should be washed out before greasing, especially in the case of lubricants with a PTFE/alkoxyfluoroether base and thickeners based on polycarbamide. Bearings should be washed out if the lubricant is changed or the bearings are contaminated.

Cleaning of rolling bearings

Suitable agents for degreasing and washing

The following are suitable for degreasing and washing of rolling bearings:

- aqueous neutral, acidic or alkaline cleaning agents. Check the compatibility of alkaline agents with aluminium components before cleaning
- organic cleaning agents such as paraffin oil free from water and acid, petroleum ether (not petrol), spirit, dewatering fluids, freon 12 substitutes, cleaning agents containing chlorinated hydrocarbons

Cleaning should be carried out using brushes, paint brushes or lint-free cloths. In the case of resinous oil or grease residues, precleaning by mechanical means followed by treatment with an aqueous, strongly alkaline cleaning agent is recommended. Legal regulations relating to handling, environmental protection and health and safety at work must be observed. The specifications of cleaning agent manufacturers must be observed. Paraffin oil, petroleum ether, spirit and dewatering fluids are flammable, while alkaline agents are corrosive. The use of chlorinated hydrocarbons is associated with the risk of fire, explosion and decomposition as well as with health hazards. These hazards and appropriate protective measures are described comprehensively in Datasheet ZH1/425 of the Hauptverband der gewerblichen Berufsgenossenschaften (German Federation of Institutions for Statutory Accident Insurance and Prevention). Rolling bearings must be dried and preservative applied immediately after cleaning.

10.2 Guidelines for mounting

Comprehensive information on mounting and dismounting is given in the publications Mounting Handbook MH 1 and IS 1, Mounting and Maintenance of Rolling Bearings.

Observe guidelines

The following guidelines must always be taken into account:

- The assembly area must be kept clean and free from dust
- Protect bearings from dust, contaminants and moisture. Contaminants have a detrimental influence on the running and operating life of rolling bearings
- Before mounting work is started, familiarise yourself with the design by means of the final assembly drawing
- Before mounting, check whether the bearing presented for mounting corresponds to the data in the drawing
- Check the housing bore and shaft seat for dimensional, geometrical and positional accuracy and for cleanliness
- Check that the shaft and housing bore have a lead chamfer of 10° to 15°
- Wipe away any anti-corrosion agent from the seating and contact surfaces, wash anti-corrosion agent out of tapered bores
- Lightly oil the bearing ring seating surfaces or rub with solid lubricant
- Do not cool the bearings excessively. Moisture due to condensation can lead to corrosion in the bearings and bearing seats
- After mounting, provide the rolling bearings with lubricant
- Check the correct functioning of the bearing arrangement

10.3 Accessories for mounting

Avoid applying direct blows to the bearing rings with a hammer.

Mounting of non-separable bearings

In the mounting of non-separable bearings, the mounting forces must always be applied to the ring with a tight fit ➤197| 1. This ring is also mounted first. Forces acting on the ring with a loose fit are transmitted by the rolling elements. This can damage the raceways and rolling elements.

1
Non-separable bearing

Tight fit of the inner ring, mount this ring first

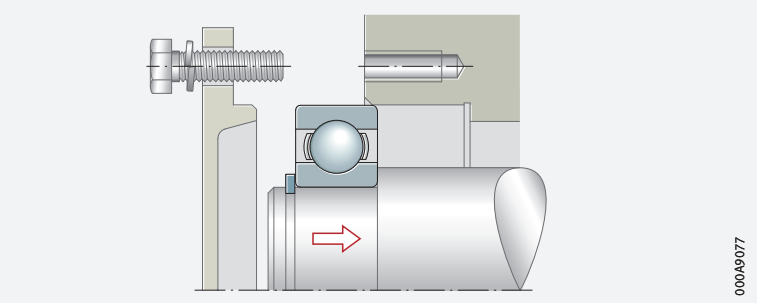

Mounting of separable bearings

Mounting is easier in the case of separable bearings; the two rings can be mounted individually ➤197| 2. Rotating the ring while fitting to give a screwdriver effect will help to avoid scraping marks.

2
Separable bearing

Tight fit of the inner ring, individual fitting of rings

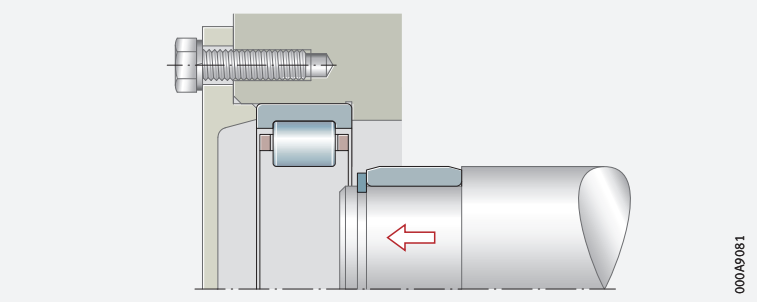

Mechanical, hydraulic and thermal accessories

The mounting method is dependent on the bearing type and size

Due to the different bearing types and sizes, rolling bearings cannot all be mounted and dismounted using the same method. An overview of suitable tools and methods for mounting and dismounting is shown in ➤210| 1.

Mechanical or hydraulic mounting

Cold fitting/ driving on of bearings

Where smaller bearings with cylindrical seats must have a tight fit on their mating parts and the interference values are not too large, they can be pressed onto the shaft or into the housing. Mechanical or hydraulic presses can be used for this purpose ➤197| 3.

3
Hydraulic press for mounting

Direct pressing-in forces through the inner ring

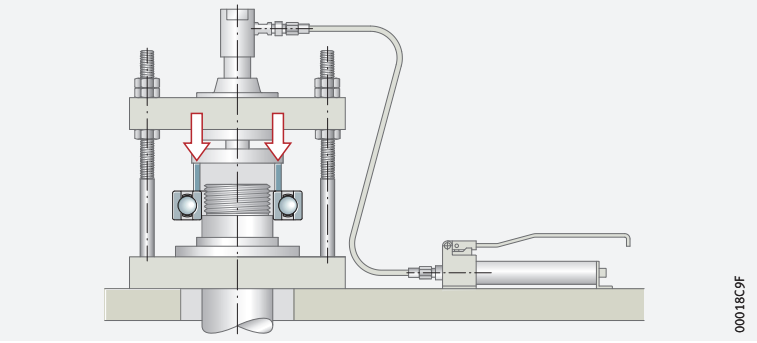

Mounting of small bearings

Small bearings can be driven onto the shaft using a mounting sleeve made from aluminium with a flat end face ➤*198*|*4*. The mounting sleeve must be matched to the bearing ring to be mounted. During mounting, it must be ensured that no other bearing components, such as seals, are damaged.

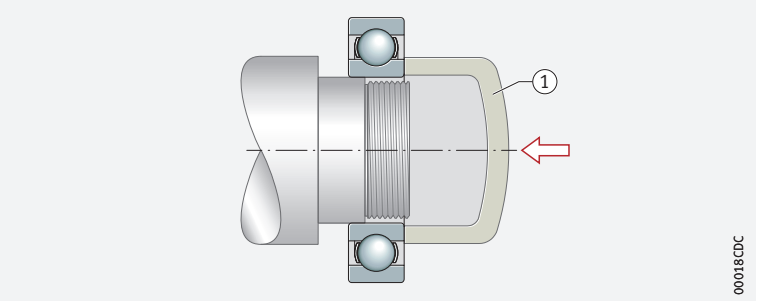

4
Sleeve for driving up small bearings

① *Aluminium mounting sleeve*

Thermal methods

Sliding on of warm bearings

Larger bearings, or bearings that must have a large interference fit, are generally mounted by means of thermal methods.

For the interference values normally used with rolling bearing seats, it is sufficient to heat the bearings to approx. +80 °C, with a maximum of +100 °C ➤*198*|*5*.

Induction heating technology and electric ovens

Heating can be carried out using induction heating technology ➤*208*|*25*. A distinction is made here between the low frequency technique (50 Hz to 60 Hz) and medium frequency technique (10 kHz to 25 kHz).

Induction heating devices

The induction heating devices described in ➤*205*|*10.6* can be used to heat rolling bearings quickly, safely and, above all, cleanly to the correct temperature for mounting ➤*208*|*24* to ➤*208*|*25*. The temperature is measured directly on the inner ring. Since the inner ring heats up more quickly than the outer ring, the bearing can be positioned on the shaft and in the housing at the same time with only slight heating of the outer ring.

Electric ovens, oil bath, heating plate

Furthermore, an electric oven, a clean oil bath or a thermostatically controlled heating plate, ➤*198*|*5*, can be used. In the case of electric ovens and induction heating devices, the temperature is controlled by means of a temperature sensor or thermostat and is therefore held to very high accuracy. This is important since the hardness of the rings must not decrease due to the tempering effect.

When bearings are heated on a heating plate, all parts of the bearing must be protected against overheating (e.g. plastic parts, seals, lubricant)➤*198*|*5*.

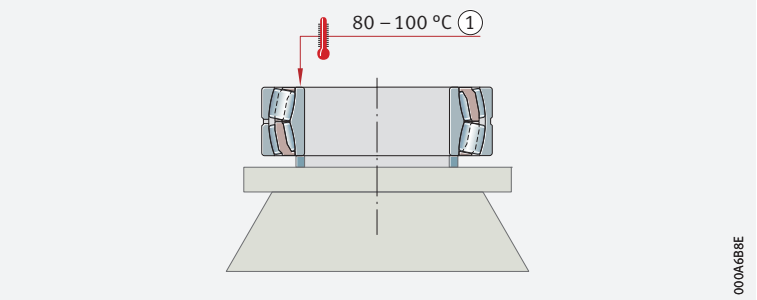

5
Bearings with plastic cage: heating on a heating plate

① *For standard bearings*

Mounting on tapered bearing seats

In order to give a tight fit, the inner ring is pressed on axially

In the case of tapered seats, the tight fit required is achieved by pressing the inner ring on axially. Whether a sufficiently tight fit is achieved can be determined from the expansion of the inner ring and therefore the reduction in the radial internal clearance, or from the axial drive-up distance on the taper; see corresponding product chapters.

Reduction in radial internal clearance

Checking of the clearance is necessary during mounting

The reduction in radial internal clearance is the difference between the radial internal clearance before mounting and the bearing clearance after mounting of the bearing. The radial internal clearance must be measured first. During pressing on, the radial clearance (bearing clearance) must be checked until the necessary reduction in the radial internal clearance and thus the required tight fit is achieved.

Measuring the radial internal clearance of spherical roller bearings using a feeler gauge

The radial clearance of larger bearings is measured using a feeler gauge. In the case of spherical roller bearings, it must be ensured that both rows of rollers are measured at the same time ➤199|6.

It can only be ensured that the inner ring is not laterally offset relative to the outer ring when the internal clearance values are identical for both rows of rollers.

6
Radial internal clearance in spherical roller bearings

s_r = *radial internal clearance*

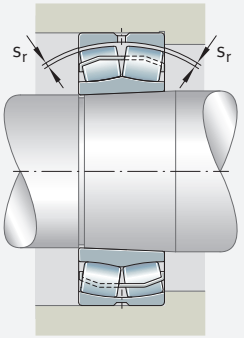

Measuring the axial drive-up distance

Measuring axial drive-up distance as an alternative to measuring radial internal clearance

Instead of reducing the radial internal clearance, the axial drive-up distance on the taper can be measured; see corresponding product chapters. For a shaft seat with a normal taper 1:12, the axial drive-up distance is approx. 15 times the reduction in radial internal clearance.

The mounting of small bearings with a tapered bore requires particular care. Since the radial internal clearance is often smaller than the thinnest measuring sheet, measurement using a feeler gauge is no longer possible. The bearing is therefore slid on, where possible, outside the housing. It may only be pressed on so far that the outer ring can still be rotated easily and, in the case of self-aligning bearings, can be swivelled out by hand under slight resistance. The shaft with the mounted bearing is inserted in the housing.

Mounting of withdrawal sleeves

With large ring cross-sections, high forces are necessary for pressing-in

Withdrawal sleeves are pressed on and secured between the inner ring and shaft by means of a nut seated on the shaft. For bearings with large ring cross-sections, considerable forces are necessary for pressing-in. In such cases, mounting is made easier by means of the nut with pressure screws shown in ➤200|7.

Pressure screws must always be tightened in a crosswise sequence

In order that the withdrawal sleeve is not pressed in skewed, the nut is first tightened so far that the pressure ring is fully in contact with the withdrawal sleeve. The pressure screws distributed uniformly around the circumference are then tightened uniformly in a crosswise sequence until the required reduction in radial internal clearance is achieved. Since the taper of the withdrawal sleeve is self-locking, the nut can then be removed; the position of the withdrawal sleeve is secured by the shaft nut.

7
Nut with pressure ring for pressing in large withdrawal sleeves, bearing with tapered bore

① *Pressure screw*
② *Shaft nut*
③ *Pressure ring*
④ *Withdrawal sleeve*

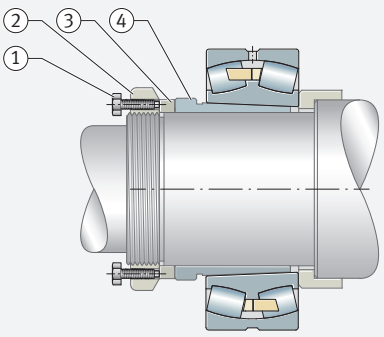

In the mounting of bearings with a tapered bore, it must be ensured that the seats of the sleeve connections are rubbed with a very thin layer of oil. Mounting pastes must not be used. While a thicker layer of lubricant would reduce the friction and thus allow easier mounting, the sleeves could however become loose when the nut with the pressure screws is removed after mounting. In operation, the lubricant would be gradually squeezed out of the fit joint and the tight fit of the bearing would be progressively lost.

Measures to be taken if the bearing is to be mounted again after dismounting

If the rolling bearing has been dismounted and is to be used again, it is not sufficient to move the retaining nut to its earlier position. After longer periods of operation, the fit loosens again since the thread undergoes settling and the surfaces become smoothed. In this case also, the reduction in radial internal clearance or the axial drive-up distance, or the expansion of the raceways in the case of cylindrical roller bearings, must be measured again.

Mounting of large bearings using hydraulic nuts

Hydraulic nuts are available for all common sleeves and shaft threads

For the mounting of large bearings, it is advisable to use a hydraulic nut in order to slide the bearing into place or press in the sleeve ➤*200*|*8*. Hydraulic nuts are available for all common sleeves and shaft threads. The hydraulic method described not only gives easier mounting, but in particular easier dismounting.

8
Hydraulic nut for mounting of bearings with tapered bore

① *Hydraulic nut*

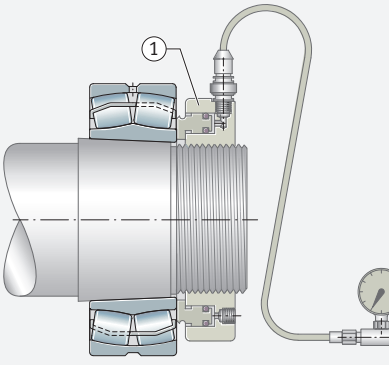

10.4 Regulating the clearance during mounting

The preset internal clearance gives the required bearing clearance after mounting

In some bearing arrangements, a certain radial and axial clearance necessitated by the design and temperature conditions is set during mounting which may also, if required, be zero clearance or light preload. In large volume situations, bearing units are increasingly fitted whose internal clearance has been preset such that the required bearing clearance is achieved when mounted; see product chapter and MH 1.

10.5 Accessories for dismounting

Dismounting of bearings with a tight fit is more difficult

The removal of a rolling bearing mounted with a tight fit is not always easy, especially if fretting corrosion has formed. Defective rolling bearings can be dismounted by cutting or splitting of the rings.

If the bearings are to be reused, the force used in pressing the bearing off must always be applied to the bearing ring with a tight fit ➤*201*|*9*.

9
Incorrect dismounting: the rolling elements must support wthdrawal forces

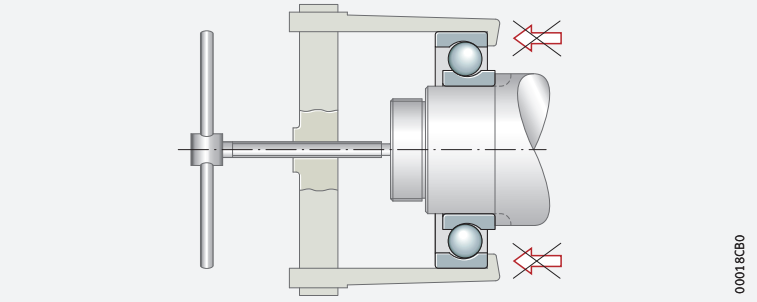

Dismounting of non-separable bearings: the tool must be applied to the ring with a tight fit

In the case of non-separable bearings, the ring fitted with a sliding seat must first be removed from its seat ➤*201*|*10*. The ring with a tight fit is then pressed off. The tools must be applied to the bearing ring with a tight fit ➤*202*|*11* and ➤*202*|*12*. In order to apply the withdrawal device to the inner ring, extraction slots are provided in the shaft shoulder ➤*202*|*12*.

Simpler dismounting with fixed press

Dismounting of rolling bearings is a simpler operation if a fixed press is used for pressing off ➤*202*|*13*.

10
Dismounting of non-separable bearings

① *Bearing outer ring fitted with sliding seat*

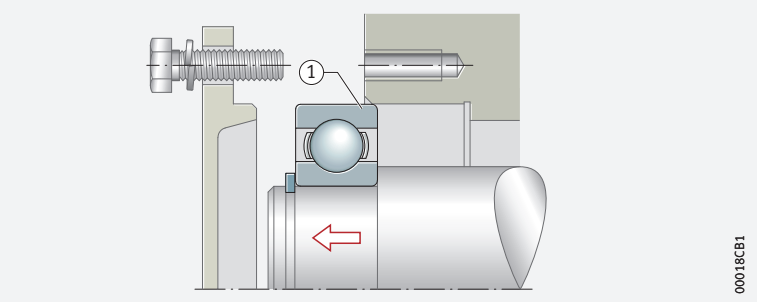

11
Withdrawal device with tie rods

① *Tie rod*

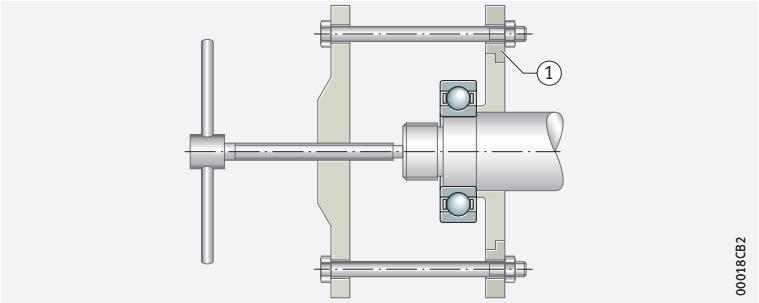

12
Withdrawal device with adjustable arms

① *Extraction slots in shaft shoulder*

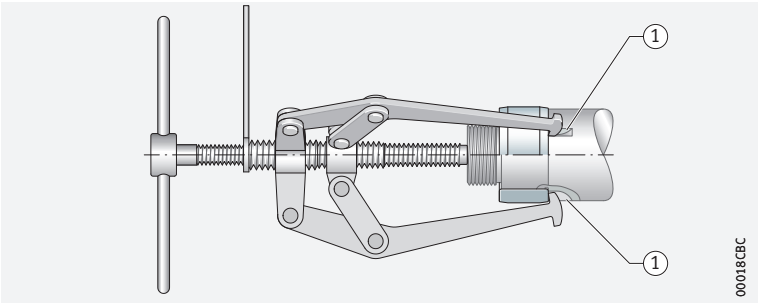

13
Pressing off a ball bearing using a fixed (stationary) press

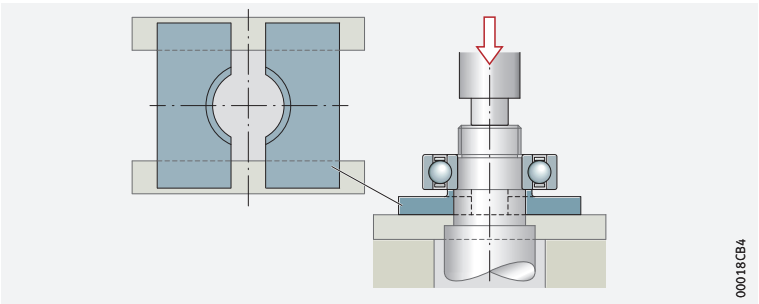

✎ *Ball bearing extractor with clamping tool*

In cases where the inner ring is in contact with the shaft shoulder and no extraction slots are present there, it is possible to remove ball bearings, tapered roller bearings and cylindrical roller bearings with the aid of an extractor with a clamping tool. In the case of the ball bearing extractor, the finger-shaped extensions of the clamping tool inserted in the extractor engage between the balls on the raceway edge of the inner ring ➤ *203* | *14*.

The clamping tool is part of a collet that is clamped against the inner ring by means of a conical clamping ring. It is extracted by means of a tensioning spindle. The extractor can also be used to remove bearings, that are still mounted in the housing, from the shaft.

14
Ball bearing extractor with clamping tool



✎ *Further precautions for the adjacent construction when using dismounting tools*

The examples show that consideration must be given in the design of the adjacent parts to the placement of extraction tools. If the inner ring has a tight fit, its end face must be accessible. This can be achieved, for example, by restricting the shaft shoulder diameter or providing slots in the shaft shoulder ➤ *202* | *11* and ➤ *202* | *12*. Spacer rings or labyrinth rings must be designed such that they do not disrupt extraction.

✎ Recesses or threaded holes must be provided for extraction screws

The same applies to the design of the housing. Pot type housings with a rigid end wall are preferred for strength reasons, but cause difficulties in dismounting of the bearing outer ring. If rigid shoulders are present, recesses or threaded holes for extraction screws should be provided ➤ *204* | *15* and ➤ *204* | *16*.

15
Slots in housing wall for placement of extraction tool

① *Slot*

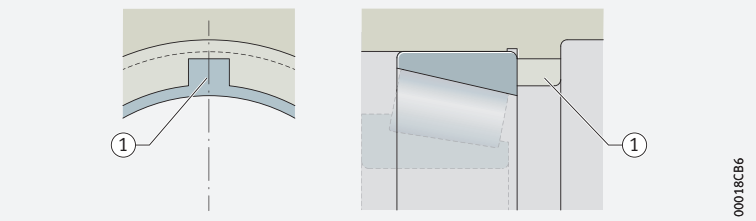

16
Pressure screws in housing wall for extraction of bearing ring

① *Pressure screw*

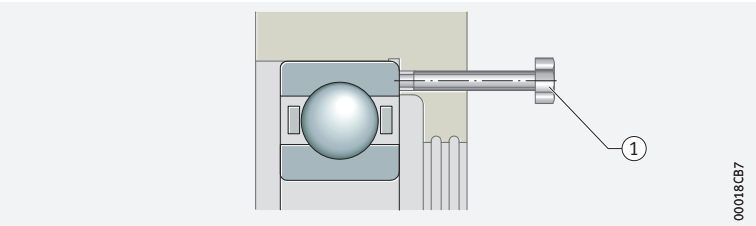

Separable bearings

✎ Separable bearings allow easier dismounting

The requirement for easy dismounting of bearings also influences bearing selection. Since they are easy to dismount, separable bearings such as magneto bearings, tapered roller bearings, cylindrical roller bearings and needle roller bearings are often used in preference to other bearing types.

Withdrawal sleeve

✎ Method for dismounting a withdrawal sleeve

The withdrawal sleeve is also an accessory to give easier dismounting. For dismounting of the sleeve, it is possible in difficult cases – principally in the case of large size bearings – to use a nut with quenched and tempered pressure screws or a hydraulic nut in place of the extraction nut that is otherwise normally used ➤ *204* | *17*.

17
Dismounting of a withdrawal sleeve

① *Extraction nut*
② *Quenched and tempered pressure screws*
③ *Hydraulic nut*

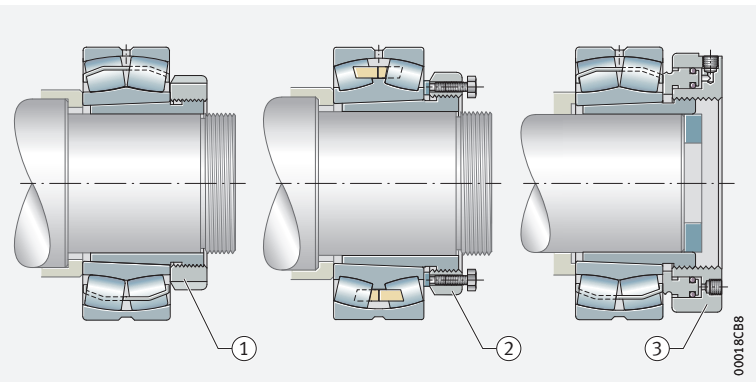

10.6 Special methods for mounting and dismounting

Hydraulic methods or induction heating are suitable for overcoming high adhesive friction

In practice, the high level of adhesive friction in the seating surfaces of tightly fitted bearings often causes problems in extraction. If fretting corrosion has formed in the fit joint, the fit surfaces often undergo fretting during extraction. This can be combatted by means of induction heating or – in the case of larger bearings – by means of hydraulic mounting methods.

Hydraulic methods

Oil between the seating surfaces causes slight expansion of the bearing ring

In hydraulic mounting methods, oil is pressed between the seating surfaces of the tight bearing fit, which slightly expands the bearing ring ➤*205*|*18*. The fluid film eliminates the contact between the fit parts to the point where these can be displaced with little application of force and without the risk of surface damage.

The hydraulic method is only suitable for dismounting in the case of cylindrical fit parts. Conical fit parts can, however, be mounted and removed using the hydraulic method ➤*205*|*18*.

During dismounting, the inner ring becomes loose abruptly. It must therefore be axially secured.

18
Principle of hydraulic mounting

① *For cylindrical seating surfaces*
② *For tapered seating surfaces*

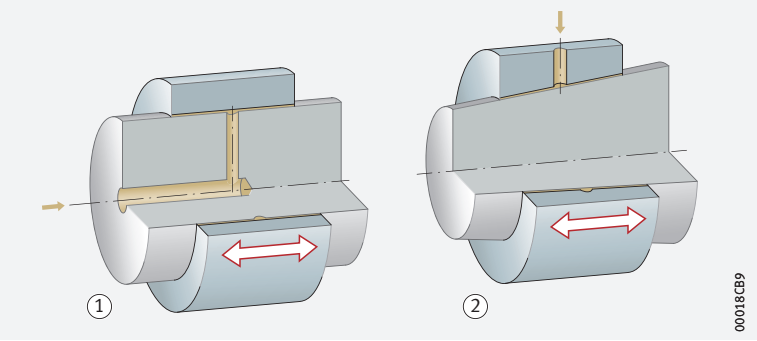

Oil grooves, feed ducts and threaded connectors are necessary

In order to press oil in, oil grooves and feed ducts as well as threaded connectors for the pressure generation devices must be provided ➤*205*|*19*. There are designs of adapter and withdrawal sleeves that already have these ducts ➤*206*|*20*.

19
Oil ducts and grooves in a tapered shaft

B = *bearing width*

① *Oil groove*

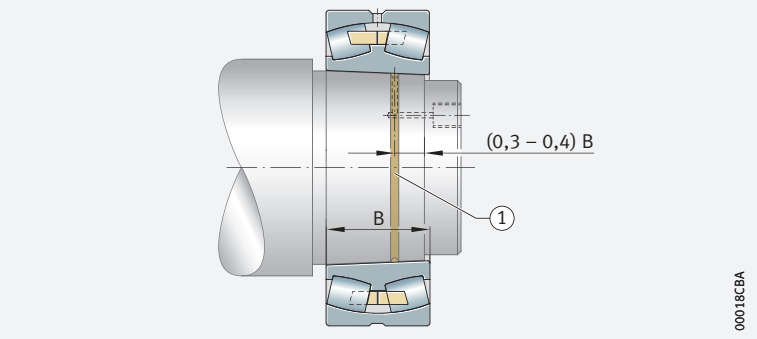

20
Adapter and withdrawal sleeves with oil ducts

① *Oil duct*

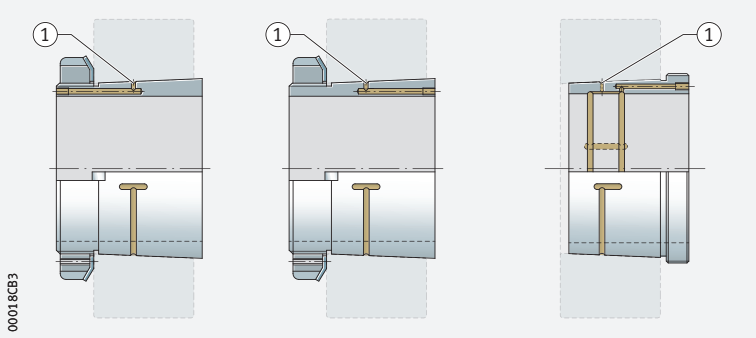

✎ *Oil injector for bearings with tapered bore and tapered shaft journal*

In the mounting and dismounting of bearings with a tapered bore that are mounted on a tapered shaft journal, a simple oil injector is sufficient ➤*206*|*21*. If cylindrical fit surfaces are present and adapter or withdrawal sleeves are used, more oil must be pressed in due to the oil loss that occurs at the edges of the fit surfaces. In this case, a twin-stage hand piston pump with an oil pressure of up to 4 000 bar can be used ➤*206*|*22*.

21
Oil injector and valve nipples

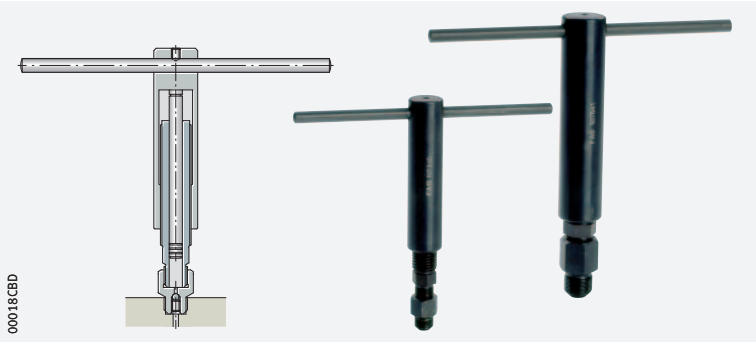

22
Twin-stage hand piston pump

Oil pressure of up to 4 000 bar



Induction heating

Expansion of the rings by induction heating

In addition to the hydraulic method, the expansion of bearing rings by means of induction heating has gained considerable importance for the mounting and dismounting of rolling bearings and is currently the state of the art. Different induction heating devices are used depending on the application and whether mounting or dismounting is required.

Medium frequency technology for mounting and dismounting

Units with medium frequency technology are used to heat very large bearings and other components of shrink fit connections by inductive means for the purpose of joining or loosening. Such a unit comprises a medium frequency generator and an inductor.
Depending on the application, this can be of a flexible or rigid design. The flexible version is similar to a cable ➤*207*|*23*.

These inductors give safe and reliable heating of rolling bearings or other ring-shaped steel parts, even at locations with poor accessibility. Flexible inductors are suitable for the mounting and dismounting of differently sized and shaped workpieces.

23
Induction unit with medium frequency technology and flexible inductor



Rigid inductors for the mounting and dismounting of identical components

In the batch mounting or dismounting of identical components such as wheelset bearings on rail vehicles, flexibility is less important than reduced setup times and increased process reliability. Rigid inductors are suitable for this task ➤*208*|*24*. In this design, the coil is fitted in a housing matched to the workpiece and can thus be placed quickly and easily in the heating zone. Rigid inductors are also suitable, in contrast to the flexible variant, for small components.

24
Induction device with medium frequency technology, rigid inductor

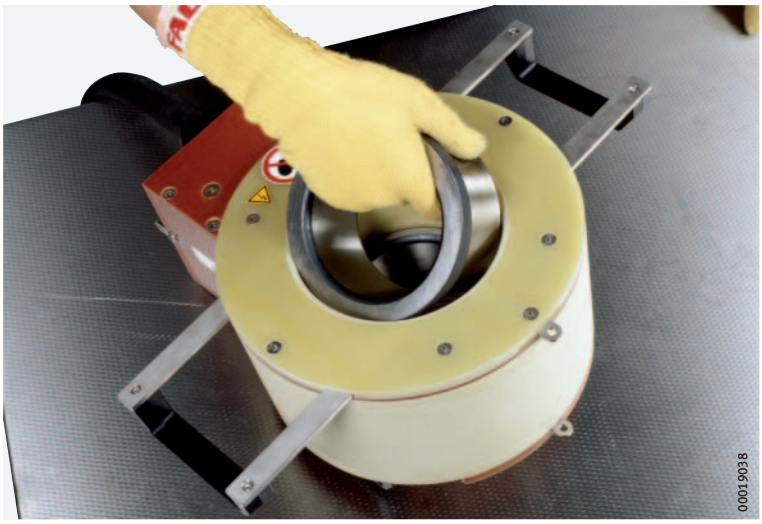

Induction heating devices for mounting

Induction heating devices, which can be used to heat complete rolling bearings of any type for mounting ➤*208*| *25*. These devices can be used to heat sealed and greased bearings, as well as shrink fit and labyrinth rings or other ring-shaped metallic parts.

The devices operate on the transformer principle, where the bearing acts as a short-circuited secondary winding. As long as the primary current is switched on, a short circuit current is induced in the bearing that heats the bearing to +80 °C or a preselectable temperature. Depending on size, the heating time is between a few seconds and a few minutes.
Heating devices are available for the normal mains voltages. The devices are used mainly in batch mounting work.

25
Induction heating devices for the mounting of complete rolling bearings

① *Table top device for bearings of 10 mm bore diameter and above*
② *Standalone device for bearings up to 400 kg mass*



Advantages over other heating methods

In comparison with other heating methods, induction heating is a very environmentally friendly, time-efficient and energy-efficient method. When heating in an oil bath, for example, the rolling bearing must be cleaned and the oil disposed of afterwards; with induction heating, this is not required. Compared with heating in a hot-air oven, time and energy requirements are also significantly lower, as the heat can be introduced during induction heating in a targeted manner.

Whereas heating in an oil bath, a hot-air oven or by means of induction heating devices can only be used for mounting, medium-frequency technology is also suitable as a high-performance process for dismounting, depending on the type of bearing. It is versatile in application and permits very rapid heating.

10.7 Tools and methods for the mounting and dismounting of rolling bearings

Whether a rolling bearing is mounted without heating, with heating or using the hydraulic method depends on various factors. The overview in ➤210| 1 shows which method is suitable in the specific circumstances.

1
Mounting and dismounting methods for rolling bearings

Bearing type	Bearing bore	d mm
Deep groove ball bearings Angular contact ball bearings Spindle bearings Four point contact bearings Self-aligning ball bearings Tapered roller bearings Barrel roller bearings Spherical roller bearings	Cylindrical	< 80 80 – 200 > 200
Cylindrical roller bearings Needle roller bearings	Cylindrical	< 80 80 – 200 > 200
Axial deep groove ball bearings Axial angular contact ball bearings Axial cylindrical roller bearings Axial spherical roller bearings	Cylindrical	< 80 80 – 200 > 200
Self-aligning ball bearings Self-aligning ball bearings with adapter sleeve Barrel roller bearings Barrel roller bearings with adapter sleeve Spherical roller bearings Spherical roller bearings with adapter sleeve Spherical roller bearings with withdrawal sleeve Adapter sleeve Withdrawal sleeve	Tapered	< 80 80 – 200 > 200
Cylindrical roller bearings, double row	Tapered	< 80 80 – 200 > 200

Symbols

Induction heating device
Heating cabinet
Heating ring
Heating plate
Medium frequency technology



Mounting			Dismounting		
Thermal	Mechanical	Hydraulic	Thermal	Mechanical	Hydraulic
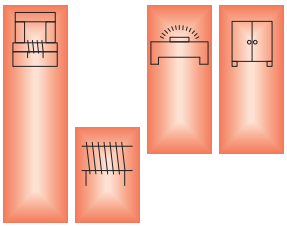	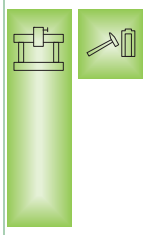			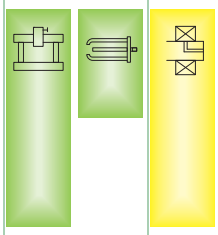	
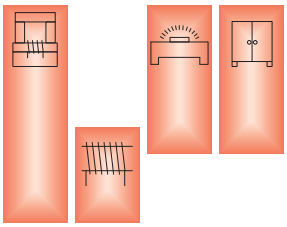	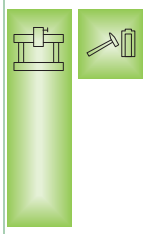		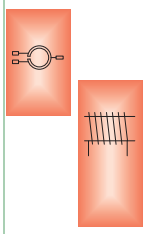	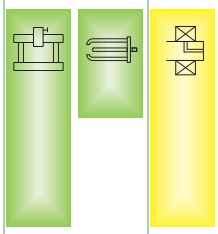	
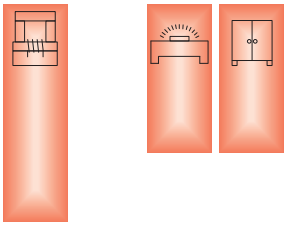	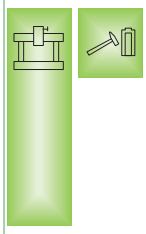			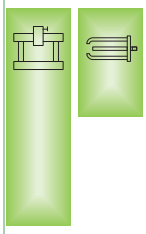	
	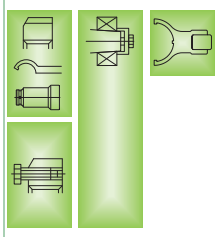	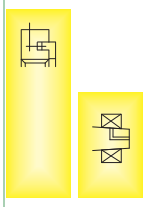		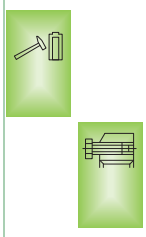	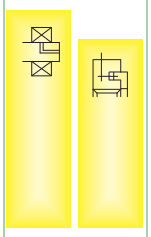
		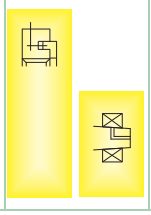		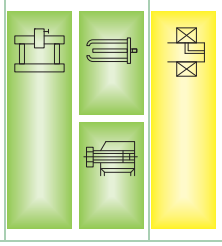	


Hammer and mounting sleeve


Double hook wrench


Socket wrench


End cap


Hydraulic nut


Mechanical and hydraulic presses


Nut and hook wrench


Nut and mounting wrench


Withdrawal device


Hydraulic method

Deep groove ball bearings

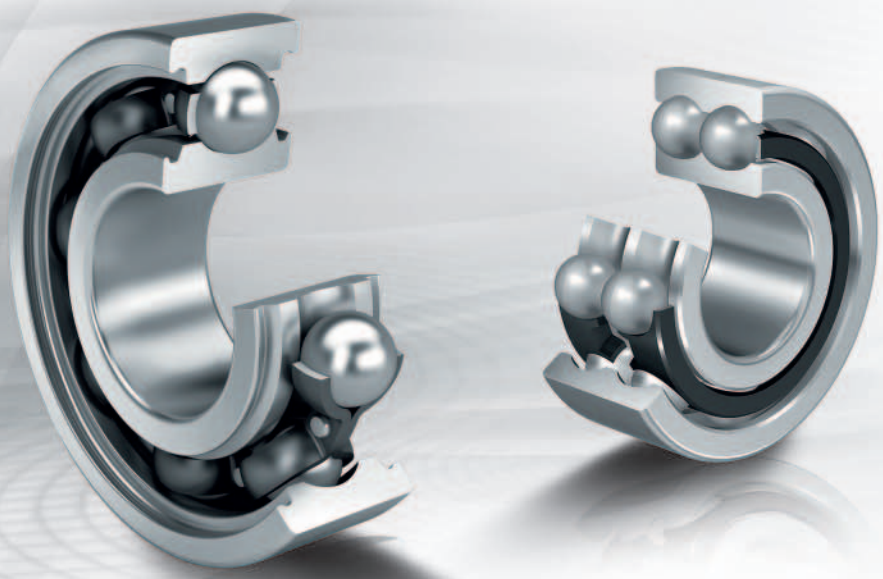



Matrix for bearing preselection ____ 215

1 Deep groove ball bearings ____ 216

1.1 Bearing design ____ 216
1.2 Load carrying capacity ____ 220
1.3 Compensation of angular misalignments ____ 221
1.4 Lubrication ____ 221
1.5 Sealing ____ 222
1.6 Speeds ____ 224

1.7 Noise _____ *224*
1.8 Temperature range _____ *225*
1.9 Cages _____ *226*
1.10 Internal clearance _____ *227*
1.11 Dimensions, tolerances _____ *228*
1.12 Suffixes _____ *229*
1.13 Structure of bearing designation _____ *230*
1.14 Dimensioning _____ *230*
1.15 Minimum load _____ *232*
1.16 Design of bearing arrangements _____ *232*
1.17 Mounting and dismounting _____ *234*
1.18 Legal notice regarding data freshness _____ *235*
1.19 Further information _____ *235*
Product tables _____ *236*
Deep groove ball bearings, single row _____ *236*
Deep groove ball bearings, double row _____ *280*

Matrix for bearing preselection

The matrix gives an overview of the types and design features.

It can be used to make a preliminary assessment of whether a bearing is fundamentally suitable for the envisaged application.

The additional information provided in the product chapter (see column "detailed information") and in the Technical principles must, however, be observed in addition to this overview in selection of the bearing.

+++ extremely suitable
++ highly suitable
+ suitable
(+) suitable with restrictions
– not suitable/not applicable
✓ available

Design features and suitability			Deep groove ball bearings		
			single row	double row	detailed information ➤ 216
Load carrying capacity	radial		++	++	➤ 220 | 1.2
	axial, one direction		+	++	➤ 220 | 1.2
	axial, both directions		+	++	➤ 220 | 1.2
	moments		(+)	+	➤ 220 | 1.2
Compensation of angular misalignments	static		(+)	–	➤ 221 | 1.3
	dynamic		(+)	–	➤ 221 | 1.3
Bearing design	cylindrical bore		✓	✓	➤ 216 | 1.1
	tapered bore		–	–	
	separable		–	–	➤ 234 | 1.17
Lubrication	greased		✓[1]	✓	➤ 221 | 1.4
Sealing	open		✓	✓	➤ 222 | 1.5
	non-contact		✓	–	➤ 222 | 1.5
	contact		✓	–	➤ 222 | 1.5
Operating temperature in °C	from to		–30 +120[2]	–30 +120	➤ 225 | 1.8
Suitability for	high speeds		+++	+	➤ 224 | 1.6
	high running accuracy		++	+	➤ 228 | 1.11 ➤ 115
	low-noise running		+++	+++	➤ 224 | 1.7 ➤ 232 | 1.16
	high rigidity		+	+	➤ 54
	reduced friction		+++	+++	➤ 56
	length compensation within bearing		–	–	
	non-locating bearing arrangement		+	+	➤ 141
	locating bearing arrangement		++	++	➤ 141
X-life bearings		X-life	–	–	
Bearing bore d in mm	from to		2 260[3]	10 90	➤ 236 ➤ 280
Product tables	from page ➤		236	280	

1) For sealed bearings only
2) Valid for bearings with sheet steel sealing shields
3) Larger catalogue bearings GL 1

1 Deep groove ball bearings

Deep groove ball bearings are available in single row and double row designs.

Single row bearings are particularly suitable where:

- high and very high speeds are required
- the bearing arrangement must be operated with very low friction
- very low running noise is required, without reducing the speed, load carrying capacity and operating life of the bearing (Generation C) ➤ *217*
- high demands are made on the sealing of the bearing, without increasing heat generation or limiting the speed (Generation C) ➤ *222* | *1.5*
- the bearing position is to be designed particularly economically

Double row bearings can be considered for bearing arrangements where:

- the load carrying capacity of single row deep groove ball bearings is no longer sufficient ➤ *220*
- axial loads in both directions and/or tilting moments must be supported in addition to radial loads ➤ *220*
- a high load carrying capacity is required and the design envelope available in a radial and axial direction is relatively small

For an overview of other product-specific features, see the Matrix for bearing preselection ➤ *215*.

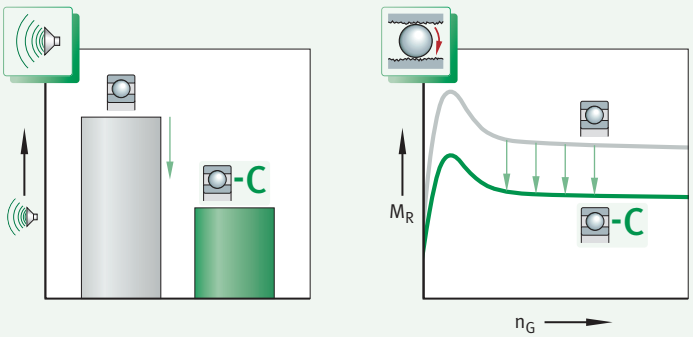

1
Comparison of standard deep groove ball bearings with bearings of Generation C: running noise, frictional torque

C = *bearings of Generation C*
M_R = *frictional torque*
n_G = *limiting speed*

1.1 Bearing design

✎ *Design variants*

Single row deep groove ball bearings are available as:

- standard bearings ➤ *217* | *2*
- bearings of Generation C ➤ *218* | *3* and ➤ *218* | *4*
- matched bearing sets ➤ *219* | *5*
- corrosion-resistant bearings ➤ *219*

Double row deep groove ball bearings are available as:

- standard bearings ➤ *219* | *6*

Single row deep groove ball bearings are also available in many other designs and sizes, as well as for specific applications, by agreement. Corrosion-resistant bearings TPI 64, larger catalogue bearings GL 1.

Standard bearings

Proven and versatile bearings with high market shares

Single row deep groove ball bearings are self-retaining units, which are part of the group of radial ball bearings. The solid outer and inner rings have deep raceway grooves, with shoulders which are not generally interrupted by filling slots ➤*217*|*2*. Solid cages made from polyamide PA66 or brass, and sheet metal cages made from steel or brass, are used as standard cages ➤*226*|*4*. The bearings are open or sealed. Due to the manufacturing processes used, open bearings, which are also available as sealed versions, can have turned recesses in the outer and inner ring for sealing washers or sealing shields.

Single row deep groove ball bearings are particularly versatile, robust in operation, easy to maintain and very economical. Due to their significant advantages, they are the most widely used rolling bearings worldwide. As a result, Schaeffler also manufactures these bearings in a large number of sizes and designs.

2
Single row deep groove ball bearings, open or sealed

F_r = radial load
F_a = axial load

① Open
② Sealing shield on both sides (non-contact)
③ Contact seal on both sides

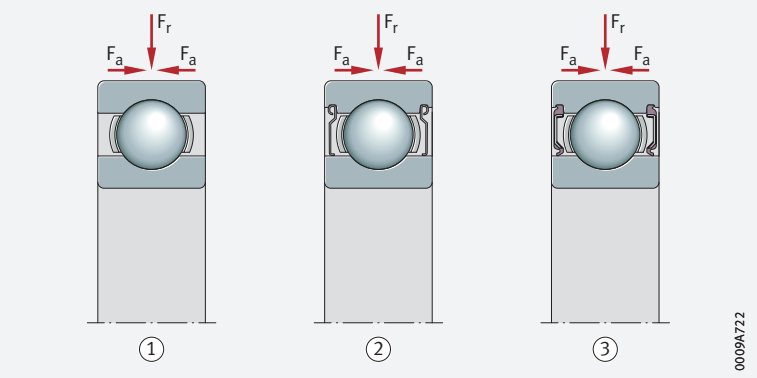

Deep groove ball bearings of Generation C

Gen. C = optimised design of standard bearings

Deep groove ball bearings of Generation C correspond in their structure to single row standard deep groove ball bearings, but are specially optimised in relation to:

- significantly quieter running
- even more effective sealing
- a further reduction in the already very low frictional torque

Measures to reduce noise

Schaeffler has analysed the causes of noise generation in deep groove ball bearings using the most advanced methods. On the basis of the findings obtained from these analyses:

- The surface of the raceways has been improved
- The ball quality has been increased
- Osculation has been optimised
- The production tolerances have been reduced
- Deep groove ball bearings have been fitted with new riveted cages made from steel

The result of this is a noise reduction in Generation C bearings over comparable standard deep groove ball bearings.

✎ *Gen. C = particularly high sealing effect due to new and improved seals*

The quality of the seal not only has a considerable influence on the rating life, but also on the efficiency of a rolling bearing. As a result, the seal must not only protect the running system reliably against contamination, the ingress of moisture and the loss of grease, but also ensure that the total frictional torque and heat generation in the bearing remain low despite the high sealing action. The new sealing shields, non-contact seals and contact seals of Generation C deep groove ball bearings (suffixes Z, BRS, HRS, ELS) demonstrate the success of Schaeffler in performing this difficult technical step effectively ➤ *218* | *3* and ➤ *218* | *4*. Description of sealing shields and seals ➤ *222* | *1.5*.

✎ *Gen. C = technical and economical advantages of very low friction*

Electric motors, electrical machinery, washing machines, ventilators and electric tools are the preferred application areas of single row deep groove ball bearings. However, in order to facilitate further increases in the efficiency of these motors, machines and tools, the power loss occurring in the bearing arrangements must be reduced.
The above-mentioned measures for reducing noise also resulted, for example, in an approximate reduction in friction of 35%, giving the designer a range of application-specific advantages:

- lower heat generation
- a longer grease operating life
- higher possible speeds
- a longer bearing operating life
- a reduced energy consumption
- lower energy costs
- lower overall cost of the bearing position

✎ *Gen. C = a leading player among single row deep groove ball bearings*

In summary, this means that, in addition to their technical advantages, bearing positions with deep groove ball bearings of Generation C are also considerably more economical than bearing arrangements with single row standard deep groove ball bearings. Generation C is available in series 60, 62, 63 and 64.

3
Single row deep groove ball bearings, Generation C, open or with non-contact seals

① *Open*
② *Sealing shield on both sides (suffix 2Z)*
③ *Non-contact seal on both sides (suffix 2BRS)*

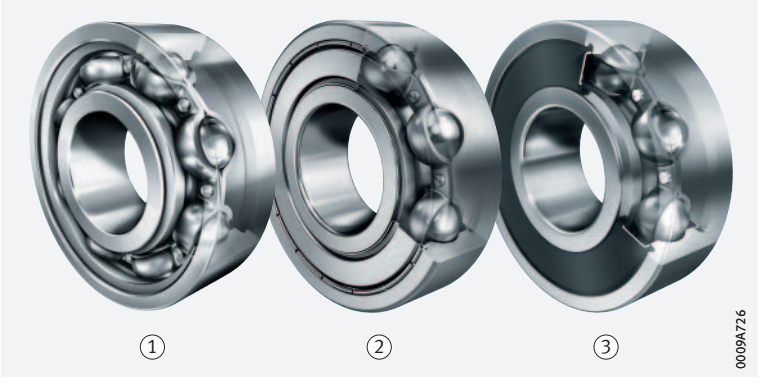

4
Single row deep groove ball bearings, Generation C, contact seals

① *Contact seal on both sides (suffix 2HRS)*
② *Contact seal on both sides (suffix 2ELS)*

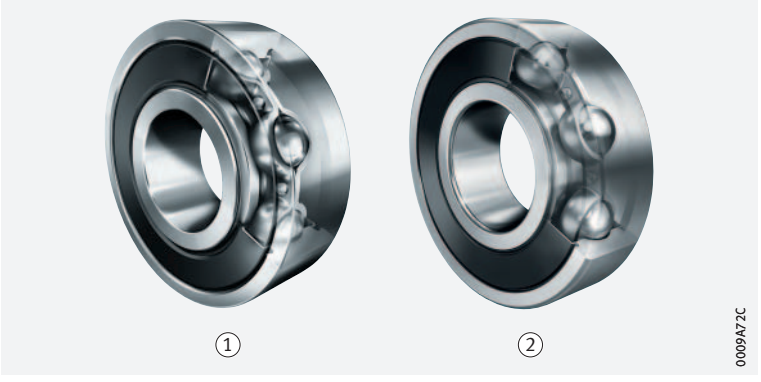

Matched bearing sets

✎ *Bearing sets in O, X or tandem arrangements*

If the load carrying capacity of a single bearing is not sufficient, or the shaft is to be guided axially in both directions with a defined clearance, single row standard deep groove ball bearings are also available as matched bearing sets ➤*219*|▭ *5*.

As the arrangement of the bearing pairs is specific to the application, Schaeffler supplies bearing sets by agreement.

▭ **5**
Matched bearing sets

F_r = *radial load*
F_a = *axial load*

① *Set in O arrangement*
② *Set in X arrangement*
③ *Set in tandem arrangement*

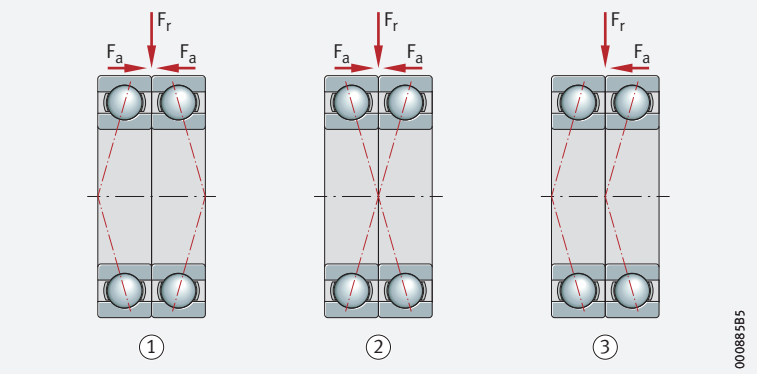

Corrosion-resistant bearings

✎ *Wide product range*

Corrosion-resistant bearings are suitable where particular requirements for corrosion protection are present. Schaeffler supplies deep groove ball bearings of this type in open and sealed designs.

The load carrying capacity for bearings made from corrosion-resistant steel is slightly lower than for bearings made from rolling bearing steel.

The range of these bearings and housings is described in detail in Technical Product Information TPI 64.

Double row deep groove ball bearings

Double row deep groove ball bearings of series 42 and 43 correspond in their structure and function to single row deep groove ball bearings arranged in pairs ➤*219*|▭ *6*. They have deep raceway grooves in the bearing rings and a narrow osculation between the raceway grooves and balls. However, they are slightly narrower than two single row deep groove ball bearings of the series 62 and 63 with the same bore and outside diameter.

▭ **6**
Double row deep groove ball bearing, open

F_r = *radial load*
F_a = *axial load*

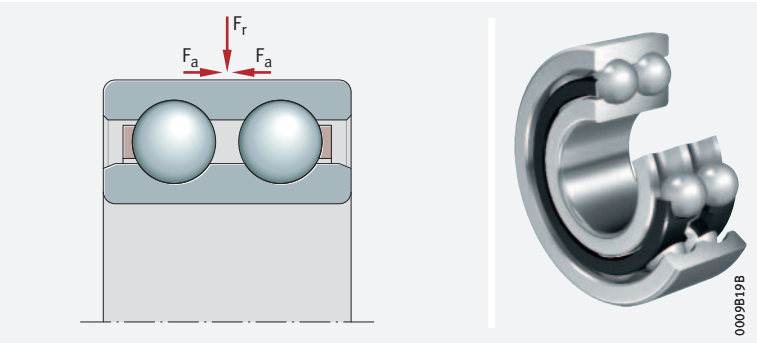

1.2 Load carrying capacity

Single row deep groove ball bearings – radial load carrying capacity

✎ *Suitable for predominantly radial loads*

The balls are in contact with the raceways at one point only. Under purely radial load, the contact points between the rolling elements and raceways lie at the centre of the raceway. As a result, the connection between the contact points passes through the radial plane, i.e. the optimum load direction is a purely radial load ➤*217*|🗋*2*.

✎ *Larger bearing cross-sections permit higher loads*

The load carrying capacity is dependent on the bearing series. As a result, deep groove ball bearings of series 618 and 619, with their smaller bearing cross-sections, cannot support loads as high as series 60, 62 and 63 – with identical dimensions relative to bore diameter d – with their larger cross-sections ➤*220*|🗋*7*.

🗋*7*
Single row deep groove ball bearings, comparison of cross-section and load carrying capacity (radial load carrying capacity C_r) for bearings with d = 40 mm

C_r = *basic dynamic load rating*

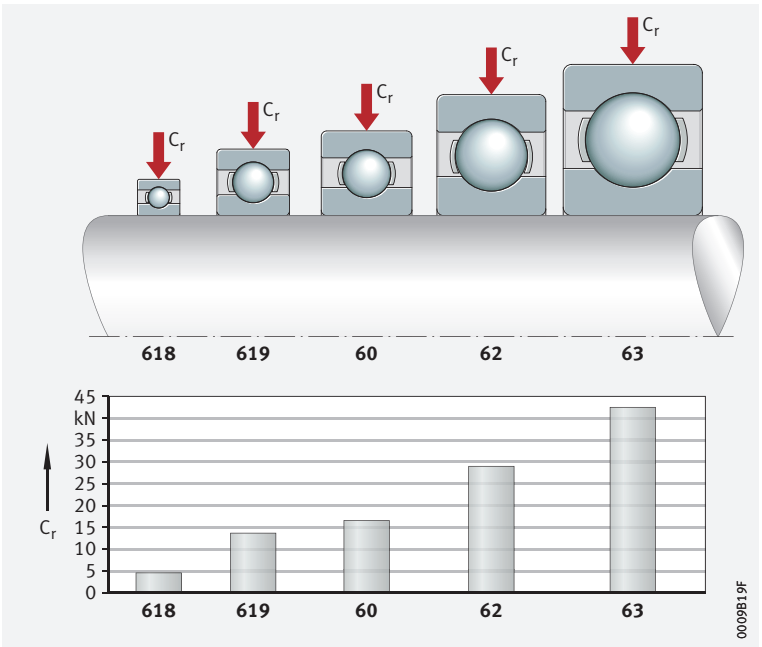

Single row deep groove ball bearings – axial load carrying capacity

✎ *Capable of supporting axial loads in both directions*

Due to the deep raceway grooves in the bearing rings and the narrow osculation between the raceway grooves and balls, single row deep groove ball bearings can support axial loads in both directions ➤*217*|🗋*2*.

The axial load carrying capacity is dependent, for example, on the bearing size, the internal construction and the operating clearance.

If the axial load is too high, however, this can increase the running noise and considerably reduce the operating life of the bearings.

If there is any uncertainty regarding the axial load carrying capacity of the bearings, please consult Schaeffler.

Double row deep groove ball bearings

✎ *Considerably higher load carrying capacity than single row bearings*

Due to the larger number of rolling elements, double row deep groove ball bearings can be subjected to greater loads than single row deep groove ball bearings with an identical ball set. They can replace two single row deep groove ball bearings if a smaller design envelope width is required.

✎ *Also suitable for tilting moment loads*

Double row deep groove ball bearings can also support tilting moment loads in addition to radial and axial loads ➤*221*|🗋*8*. They are therefore suitable for particularly short shafts that are supported by only one bearing.

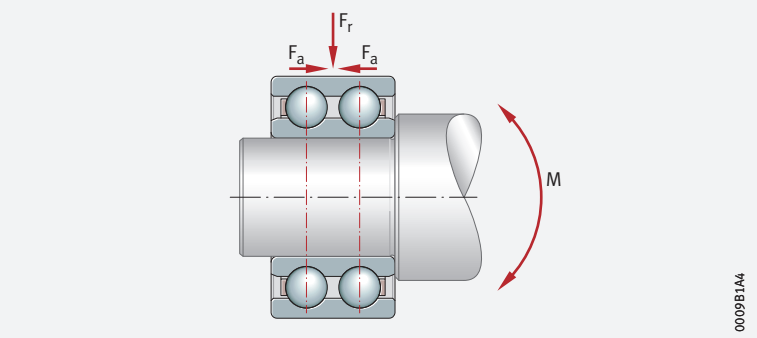

8
Unilateral bearing arrangement of a shaft with a double row deep groove ball bearing (flying bearing arrangement)

F_r = *radial load*
F_a = *axial load*
M = *tilting moment load*

1.3 Compensation of angular misalignments

Single row deep groove ball bearings – permissible adjustment angle

The adjustment angle is dependent on the magnitude of the load

Single row deep groove ball bearings are only suitable for compensating static angular misalignments to a very limited extent. As a result, the bearing positions must be well aligned. Misalignments shorten the operating life, as they place an additional strain on the bearing. In order to keep these loads at a low level, only small adjustment angles are permissible – dependent on the load – for deep groove ball bearings ➤*221* | 1.

1
Permissible adjustment angles

Series	Adjustment angle for	
	low loads	high loads
62, 622, 63, 623, 64	5′ to 10′	8′ to 16′
618, 619, 160, 60	2′ to 6′	5′ to 10′

Double row deep groove ball bearings

Due to their internal construction, double row deep groove ball bearings do not have an angular adjustment facility. When using these bearings, therefore, misalignments are not permissible.

1.4 Lubrication

Single row deep groove ball bearings

Greased bearings are maintenance-free

Deep groove ball bearings sealed on both sides are lubricated with a high quality lithium soap grease with a mineral oil base, which has good anti-corrosion characteristics. The grease filling is measured so that it is sufficient for the entire life of the bearing. As a result, these bearings are generally maintenance-free.

Do not wash greased bearings out prior to mounting. If mounting is carried out using thermal tools, the bearings should not be heated to a temperature in excess of +80 °C, taking account of the grease filling and seal material. If higher heating temperatures are required, it must be ensured that the permissible upper temperature limits for grease and seals are not exceeded.

Schaeffler recommends the use of induction heating devices for heating purposes➤*235*.

Oil or grease lubrication is possible

Open bearings and bearings with seals on one side are not greased as standard. They must be lubricated with oil or grease. Lubrication is carried out via the end faces of the bearings.

Compatibility with plastic cages

When using bearings with plastic cages, compatibility between the lubricant and the cage material must be ensured if synthetic oils, lubricating greases with a synthetic oil base or lubricants containing a high proportion of EP additives are used.

✎ *Observe oil change intervals*

Aged oil and additives in the oil can impair the operating life of plastics at high temperatures. As a result, stipulated oil change intervals must be strictly observed.

Double row deep groove ball bearings

✎ *Open bearings are greased*

As standard, the bearings are lubricated with a high quality lithium soap grease with a mineral oil base and are maintenance-free for most applications.

1.5 Sealing

Single row deep groove ball bearings

✎ *The bearings are available in open and sealed designs*

Single row deep groove ball bearings are available in open designs, as well as with seals on one or both sides ➤*217*| 2. In the case of sealed bearings, either non-contact or contact seals are used.

✎ *Provide seals in the adjacent construction*

In the case of unsealed bearings, sealing of the bearing position must be carried out by the adjacent construction. The sealing system should reliably prevent:

- moisture and contaminants from entering the bearing
- the egress of lubricant from the bearing

Single row bearings with non-contact seals and sealing shields – standard bearings and Generation C

✎ *For bearing assemblies with high speeds and lower requirements for sealing*

Non-contact seals are particularly suitable for applications with high speeds and high requirements for low inherent heat generation ➤*223*| 2. They are free from friction, except for a small amount of lubricant friction in the sealing gap. As a rule, non-contact seals do not undergo wear and therefore have an unlimited operating life. Deep groove ball bearings with non-contact seals on one or both sides have the suffixes RZ and 2RZ, or BRS and 2BRS; the suffixes Z and 2Z indicate seals on one or both sides with sealing shields.

✎ *Z sealing shields for standard bearings and for bearings of Gen. C*

Z sealing shields are made from sheet steel. They sit securely in the outer ring and form a narrow, non-contact seal gap relative to the surface of the inner ring ➤*223*| 2. This sealing arrangement is particularly suitable for applications with a rotating inner ring, high to very high speeds and low contamination impact.

✎ *RZ seals for standard bearings of series 618 and 619*

RZ seals are rubberised sealing washers with a sheet steel reinforcement, which sit securely in the outer ring and form a narrow, non-contact seal gap relative to the surface of the inner ring ➤*223*| 2.

✎ *BRS seals for bearings of Gen. C*

BRS seals are rubberised sealing washers with a sheet steel reinforcement, which sit securely in the outer ring and form a narrow, non-contact seal gap relative to the surface of the inner ring ➤*223*| 2. The seal is securely anchored in the outer ring. A recess incorporated in the inner ring forms a labyrinth in conjunction with the seal lip, which is filled with grease. The frictional behaviour of this seal is comparable with that of the Z sealing shield, however, the protection against ingress of dust and egress of lubricant is higher.

Single row bearings with contact seals – standard bearings and Generation C

✎ *For lower speeds and higher requirements for sealing action*

As these seals are in contact with a defined contact pressure against their sliding surface, they provide very good sealing action against the egress of lubricant and ingress of moisture and dust. Attention must, however, be paid to the loss of energy resulting from friction at the sealing contact. Furthermore, in bearings with contact seals, the bearing speed is restricted by the permissible sliding velocity at the seal lip, i. e. the speed suitability of these bearings is lower than for open bearings or bearings with non-contact seals.

✎ *RSR seals, for standard bearings*

RSR seals are elastomer lip seals with a sheet steel reinforcement ➤*223*| 2. One seal lip is in radial contact with the inner ring.

HRS and ELS seals for bearings of Gen. C

HRS and ELS seals are securely anchored in a recess in the outer ring. The sealing material is vulcanised onto a sheet steel reinforcement ➤223| 2. The sealing washer, together with the inner ring, forms an axial sealing system. In addition, the outer non-contact lip forms a protective labyrinth with the inner ring. An additional increase in the sealing action is also provided by the film of grease between the two seal lips. With this sealing arrangement, higher speeds can be achieved than with conventional RSR seals, as the frictional torque and thus the heat generation in the bearing is lower.

Generation C deep groove ball bearings with contact seals are supplied with HRS seals as standard. ELS seals are available for these bearings by agreement.

2 *Seal characteristics – standard bearings and Generation C*

+++ = *excellent*
++ = *very good*
\+ = *good*
o = *satisfactory*
– = *unsatisfactory*

Suffix	Type of seal		Seal characteristic				
			low-friction running	high speeds	sealing integrity against ingress of water	sealing integrity against ingress of dust	sealing integrity against loss of grease
–	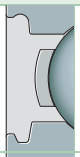	open (without seals)	+++	+++	–	–	–
Z, 2Z	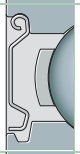	non-contact (sheet metal), for standard bearings and Gen. C	++	+++	o	o	o
RZ, 2RZ		non-contact (elastomer), for standard bearings	++	+++	o	o	o
BRS, 2BRS		non-contact (elastomer), for Gen. C	++	+++	o	+	+
HRS, 2HRS	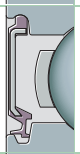	contact (elastomer), for Gen. C	o	+	++	++	++
RSR, 2RSR		contact (elastomer), for standard bearings	o	+	+	++	++
ELS, 2ELS	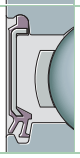	contact (elastomer), for Gen. C	+	++	++	+++	+++

Double row deep groove ball bearings

The bearings are of an open design

Double row deep groove ball bearings are not sealed. As a result, sealing of the bearing position must be carried out by the adjacent construction ➤222|1.5.

1.6 Speeds

Speeds in the product tables

The product tables generally give two speeds for the bearings:

- the kinematic limiting speed n_G
- the thermal speed rating $n_{\vartheta r}$

Limiting speeds

The limiting speed n_G is the kinematically permissible speed of the bearing. Even under favourable mounting and operating conditions, this value should not be exceeded without prior consultation with Schaeffler ➤64.

The values given in the product tables are valid for oil lubrication in the case of bearings without seals or shields and for grease lubrication where bearings are supplied greased and with seals or shields.

Bearings with solid brass cages have a significantly higher limiting speed for oil lubrication.

Values for grease lubrication

For the grease lubrication of bearings without seals or shields, 85% of the value stated in the product tables is permissible in each case.

For the grease lubrication of bearings with solid brass cages, 65% of the value stated in the product tables is permissible in each case.

Reference speeds

$n_{\vartheta r}$ is used to calculate n_ϑ

The thermal speed rating $n_{\vartheta r}$ is not an application-oriented speed limit, but is a calculated ancillary value for determining the thermally safe operating speed n_ϑ ➤64.

Bearings with contact seals

For bearings with contact seals, no reference speeds are defined in accordance with DIN ISO 15312:2004. As a result, only the limiting speed n_G is given in the product tables for these bearings.

Speeds for bearing sets

For matched bearing pairs in an O, X or tandem arrangement, the speed must be limited to approx. 80% of the individual bearings. More accurate speed data for a specific application can be requested from Schaeffler.

1.7 Noise

The Schaeffler Noise Index (SGI) has been developed as a new feature for comparing the noise level of different bearing types and series. As a result, a noise evaluation of rolling bearings can now be carried out for the first time.

Schaeffler Noise Index

The SGI value is based on the maximum permissible noise level of a bearing in accordance with internal standards, which is calculated on the basis of ISO 15242. In order that different bearing types and series can be compared, the SGI value is plotted against the basic static load rating C_0.

This permits direct comparisons between bearings with the same load carrying capacity. The upper limit value is given in each of the diagrams. This means that the average noise level of the bearings is lower than illustrated in the diagram.

The Schaeffler Noise Index is an additional performance characteristic in the selection of bearings for noise-sensitive applications. The specific suitability of a bearing for an application in terms of installation space, load carrying capacity or speed limit for example, must be checked independently of this.

The Noise Index is currently available for the main series. Additional series will be updated and introduced in subsequent publications.

Further information:

- ***medias*** *https://medias.schaeffler.com*

9
Schaeffler Noise Index for deep groove ball bearings

SGI = *Schaeffler Noise Index*
C_0 = *basic static load rating*

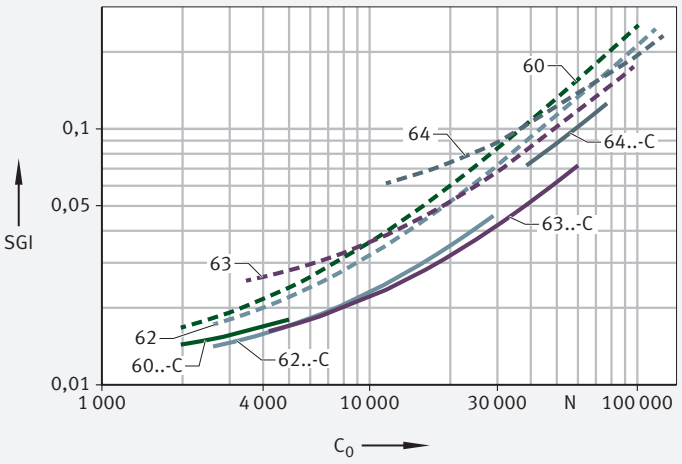

1.8 Temperature range

✎ *Limiting values*

The operating temperature of the bearings is limited by:

- the dimensional stability of the bearing rings and rolling elements
- the cage
- the lubricant
- the seals

Possible operating temperatures of single row deep groove ball bearings ➤*225*|▦*3*.

3
Permissible temperature ranges

Operating temperature	Open deep groove ball bearings		Sealed deep groove ball bearings	
	with brass or sheet steel cage	with polyamide cage PA66	with seals BRS, 2BRS ELS, 2ELS HRS, 2HRS RSR, 2RSR RZ, 2RZ	with gap seals Z, 2Z
	D ≦ 90 mm, −30 °C to +120 °C[1)]	−30 °C to +120 °C	−30 °C to +110 °C, limited by the lubricant, cage material and seal material	−30 °C to +120 °C, limited by the lubricant, cage material and seal material
	90 mm < D ≦ 240 mm, −30 °C to +150 °C[1)]			
	D > 240 mm, −30 °C to +200 °C[1)]			

[1)] *By agreement, dimensionally stabilised for higher temperatures.*

In the event of anticipated temperatures which lie outside the stated values, please contact Schaeffler.

1.9 Cages

✎ *Single row bearings: sheet steel or solid brass cages are used as standard*

Standard cages for single row deep groove ball bearings are made from sheet steel or brass ➤*226*|▦*4*. Other cage designs are available ➤*229*|▦*8*. With such cages, however, suitability for high speeds and temperatures as well as the basic load ratings may differ from the values for the bearings with standard cages.

▦**4** *Cage, cage suffix, bore code for single row deep groove ball bearings*

Bearing series	Sheet steel cage	Sheet brass cage Y	Solid brass cage M
	Bore code		
60	up to 34	–	from 36
62	up to 30	–	from 32
63	up to 26, 30	–	28, from 32
64	up to 14	–	from 15
160	up to 52	–	from 56
618	up to 08, 26, 30 to 56	09 to 24, 28	from 60
619	up to 18, 21, 32 to 48	–	26
622	up to 12	–	–
623	up to 10	–	–

✎ *Double row bearings*

Double row deep groove ball bearings have cages made from glass fibre reinforced polyamide.

For high continuous temperatures and applications with difficult operating conditions, bearings with brass or sheet steel cages should be used. If there is any uncertainty regarding cage suitability, please consult Schaeffler.

Cages for bearings of Generation C

✎ *Riveted sheet metal cages used as standard*

In bearings of Generation C, a noise-optimised, riveted sheet steel cage is used as the standard cage. This cage design does not have a cage suffix in the bearing designation.

The bearings are also available with cages made from glass fibre reinforced polyamide by agreement.

1.10 Internal clearance

Radial internal clearance

The standard is CN

Deep groove ball bearings of basic design and bearings of Generation C are manufactured as standard with radial internal clearance CN (Normal) ➤*227*|▦*5*. CN is not stated in the designation.

The bearings are also available with the smaller internal clearance C2 and with the larger internal clearance C3 and C4.

CM also available for smaller bore diameters

Deep groove ball bearings with a bore diameter $10 \leqq d \leqq 50$ are also available with the more closely toleranced bearing internal clearance CM (specifically for use in electric motors) ➤*227*|▦*6*.

DIN ISO

The values for radial internal clearance (not CM) correspond to DIN 620-4:2004 (ISO 5753-1:2009). They are valid for bearings which are free from load and measurement forces (without elastic deformation).

▦ **5**
Radial internal clearance of deep groove ball bearings – standard bearings and Gen. C

Nominal bore diameter d mm		Radial internal clearance							
		C2 (Group 2) µm		CN (Group N) µm		C3 (Group 3) µm		C4 (Group 4) µm	
over	incl.	min.	max.	min.	max.	min.	max.	min.	max.
1,5	6	0	7	2	13	8	23	–	–
6	10	0	7	2	13	8	23	14	29
10	18	0	9	3	18	11	25	18	33
18	24	0	10	5	20	13	28	20	36
24	30	1	11	5	20	13	28	23	41
30	40	1	11	6	20	15	33	28	46
40	50	1	11	6	23	18	36	30	51
50	65	1	15	8	28	23	43	38	61
65	80	1	15	10	30	25	51	46	71
80	100	1	18	12	36	30	58	53	84
100	120	2	20	15	41	36	66	61	97
120	140	2	23	18	48	41	81	71	114
140	160	2	23	18	53	46	91	81	130
160	180	2	25	20	61	53	102	91	147
180	200	2	30	25	71	63	117	107	163
200	225	2	35	25	85	75	140	125	195
225	250	2	40	30	95	85	160	145	225
250	280	2	45	35	105	90	170	155	245

▦ **6**
Radial internal clearance CM

Nominal bore diameter d mm		Radial internal clearance CM µm	
over	incl.	min.	max.
10	18	4	11
18	24	5	12
24	30	5	12
30	40	9	17
40	50	9	17

1.11 Dimensions, tolerances

Dimension standards

The main dimensions of single row deep groove ball bearings correspond to DIN 625-1:2011. Nominal dimensions of single row deep groove ball bearings ➤ *236*.

The main dimensions of double row deep groove ball bearings correspond to DIN 625-3:2011. Nominal dimensions of double row deep groove ball bearings ➤ *280*.

Chamfer dimensions

The limiting dimensions for chamfer dimensions correspond to DIN 620-6:2004. Overview and limiting values ➤ *137* | *7.11*. Nominal value of chamfer dimension ➤ *236*.

Tolerances for standard bearings

The tolerances for the dimensional and running accuracy of single and double row standard bearings correspond to tolerance class Normal in accordance with ISO 492:2014. Bearings with a higher accuracy are available by agreement. Tolerance values in accordance with ISO 492 ➤ *124* | 8.

The width tolerance of matched bearings deviates from the values in the above-mentioned standard ➤ *228* | 7.

7
Width tolerance of bearing rings in matched bearings

Tolerance symbols in accordance with ISO 492 ➤ *117* | 6
U = *upper limit deviation*
L = *lower limit deviation*

Nominal bore diameter d mm		Width deviation $t_{\Delta Bs}$ µm	
over	incl.	U	L
–	18	0	−250
18	50	0	−300
50	80	0	−450
80	120	0	−550
120	180	0	−750
180	250	0	−950
250	315	0	−1050

Tolerances for bearings of Generation C

The dimensional and running tolerances correspond to tolerance class 6 in accordance with ISO 492:2014. Bearings with a higher accuracy are available by agreement. Tolerance values in accordance with ISO 492 ➤ *126* | 11.

1.12 Suffixes

Suffixes describe the design and features of a bearing in more detail. Further special designs of deep groove ball bearings are available by agreement.

8 *Suffixes and corresponding descriptions, single row deep groove ball bearings*

Suffix	Description of suffix	
C	Deep groove ball bearing, Generation C	Standard
M	Solid brass cage, ball-guided	
MA	Solid brass cage, guided on outer ring rib	Available by agreement
MB	Solid brass cage, guided on inner ring rib	
TVH	Solid cage made from glass fibre reinforced polyamide PA66	Available by agreement
Y	Sheet brass cage	Available by agreement
C2	Radial internal clearance C2 (smaller than normal)	Available by agreement
C3	Radial internal clearance C3 (larger than normal)	
C4	Radial internal clearance C4 (larger than C3)	
CM	Radial internal clearance more closely toleranced than normal	
2BRS	Non-contact seal on both sides (labyrinth seal)	Standard for Generation C
BRS	Non-contact seal on one side (labyrinth seal)	Available by agreement
2HRS	Contact seal on both sides (lip seal)	Standard for Generation C
2RSR	Contact seal on both sides (lip seal)	Standard
RSR	Contact seal on one side (lip seal)	Available by agreement
2RZ	Non-contact seal on both sides (rubberised gap seal)	Standard
RZ	Non-contact seal on one side (rubberised gap seal)	Available by agreement
2Z	Non-contact sealing shield on both sides (sheet metal gap seal)	Standard
Z	Non-contact sealing shield on one side (sheet metal gap seal)	Available by agreement
2ELS	Contact seal on both sides (lip seal)	Available by agreement for Generation C
ELS	Contact seal on one side (lip seal)	Available by agreement for Generation C
S0	Dimensionally stabilised bearing for operating temperatures up to +150 °C	Available by agreement
S1	Dimensionally stabilised bearing for operating temperatures up to +200 °C	Available by agreement
S2	Dimensionally stabilised bearing for operating temperatures up to +250 °C	Available by agreement

9 *Suffixes and corresponding descriptions, double row deep groove ball bearings*

Suffix	Description of suffix	
B	Modified internal construction	Standard
BB		
TVH	Solid cage made from glass fibre reinforced polyamide PA66	Standard

1.13 Structure of bearing designation

With ***medias*** interchange, equivalent Schaeffler bearing designations can be determined for bearing designations from other rolling bearing manufacturers *https://www.schaeffler.de/std/1B69*.

✎ *Examples of composition of bearing designation*

The designation of bearings follows a set model. Examples ➤*230*|*10*, ➤*230*|*11* and ➤*230*|*12*. The composition of designations is subject to DIN 623-1 ➤*102*|*10*.

10
Single row deep groove ball bearing, open: designation structure

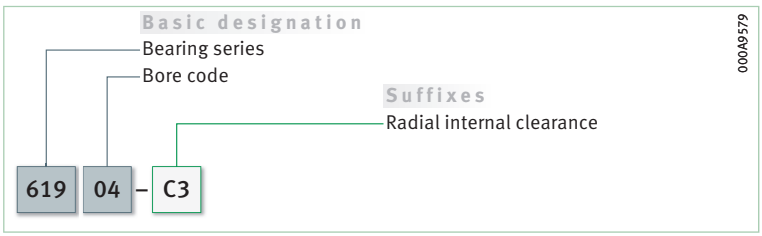

11
Single row deep groove ball bearing, sealed, Generation C: designation structure

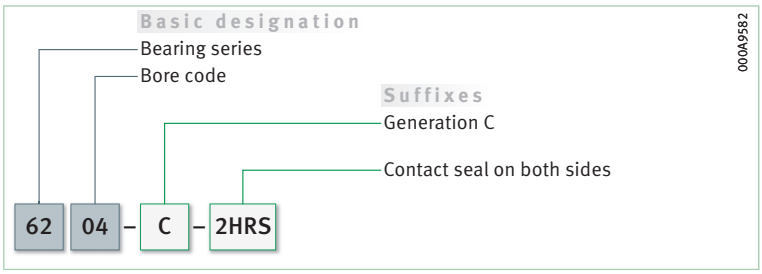

12
Double row deep groove ball bearing, open: designation structure

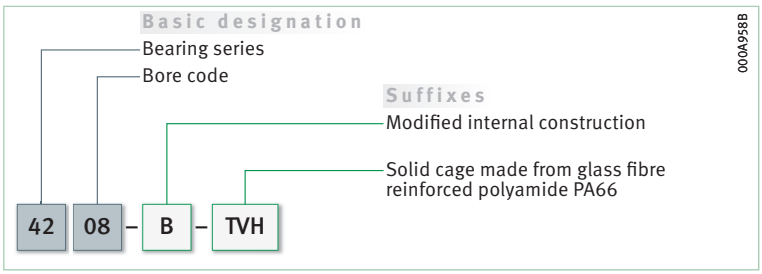

1.14 Dimensioning

Equivalent dynamic bearing load

✎ *$P = F_r$ under purely radial load of constant magnitude and direction*

The basic rating life equation $L = (C_r/P)^p$ used in the dimensioning of bearings under dynamic load assumes a load of constant magnitude and direction. In radial bearings, this is a purely radial load F_r. If this condition is met, the bearing load F_r is used in the rating life equation for P ($P = F_r$).

✎ *P is a substitute force for combined load and various load cases*

If this condition is not met, a constant radial force must first be determined for the rating life calculation that (in relation to the rating life) represents an equivalent load. This force is known as the equivalent dynamic bearing load P.

✎ *$F_a/F_r \leqq e$ or $F_a/F_r > e$*

The calculation of P is dependent on the load ratio F_a/F_r and the calculation factor e ➤*231*|*1* and ➤*231*|*2*.

f1 *Equivalent dynamic load*

$$\frac{F_a}{F_r} \leqq e \quad \Rightarrow \quad P = F_r$$

f2 *Equivalent dynamic load*

$$\frac{F_a}{F_r} > e \quad \Rightarrow \quad P = X \cdot F_r + Y \cdot F_a$$

Legend

P	N	Equivalent dynamic bearing load
F_r	N	Radial load
F_a	N	Axial load
e, X, Y	–	Factors ➤*231*|▦ *10*.

The specified values are valid for normal operating clearance ➤*231*\|▦ *10*.

If the operating clearance differs significantly, the use of BEARINX is recommended for calculation of the rating life. If the calculation values lie between the stated values (such as 0,4), then read off the table values for 0,3 and 0,5 and determine the intermediate values using linear interpolation.

For normal operating clearance, see Recommended fits ➤*148*.

▦ 10 *Factors e, X and Y*

$\frac{f_0 \cdot F_a}{C_{0r}}$	Factor (for normal operating clearance)		
	e	X	Y
0,3	0,22	0,56	2
0,5	0,24	0,56	1,8
0,9	0,28	0,56	1,58
1,6	0,32	0,56	1,4
3	0,36	0,56	1,2
6	0,43	0,56	1

Legend

C_{0r}	N	Basic static load rating ➤*236*|▦
f_0	–	Factor ➤*236*|▦
F_a	N	Axial load.

Equivalent static bearing load

✎ *$F_{0a}/F_{0r} \leqq 0,8$ or $F_{0a}/F_{0r} > 0,8$*

For deep groove ball bearings under static load ➤*231*\|*f3* and ➤*231*\|*f4*. The calculation of P_0 is dependent on the load ratio F_{0a}/F_{0r} and the factor 0,8.

f3 *Equivalent static load*

$$\frac{F_{0a}}{F_{0r}} \leqq 0,8 \quad \Rightarrow \quad P_0 = F_{0r}$$

f4 *Equivalent static load*

$$\frac{F_{0a}}{F_{0r}} > 0,8 \quad \Rightarrow \quad P_0 = 0,6 \cdot F_{0r} + 0,5 \cdot F_{0a}$$

Legend

P_0	N	Equivalent static bearing load
F_{0r}, F_{0a}	N	Largest radial or axial load present (maximum load).

Static load safety factor

✎ *$S_0 = C_0/P_0$*

In addition to the basic rating life L (L_{10h}), it is also always necessary to check the static load safety factor S_0 ➤*231*\|*f5*.

f5 *Static load safety factor*

$$S_0 = \frac{C_0}{P_0}$$

Legend

S_0	–	Static load safety factor
C_0	N	Basic static load rating
P_0	N	Equivalent static bearing load.

1.15 Minimum load

In order to prevent damage due to slippage, a minimum radial load of $P > C_{0r}/100$ is required

In order that no slippage occurs between the contact partners, the deep groove ball bearings must be constantly subjected to a sufficiently high load. Based on experience, a minimum radial load of the order of $P > C_{0r}/100$ is thus necessary. In most cases, however, the radial load is already higher than the requisite minimum load due to the weight of the supported parts and the external forces.

If the minimum radial load is lower than indicated above, please consult Schaeffler.

1.16 Design of bearing arrangements

Support bearing rings over their entire circumference and width

In order to allow full utilisation of the load carrying capacity of the bearings and thus also achieve the requisite rating life, the bearing rings must be rigidly and uniformly supported by means of contact surfaces over their entire circumference and over the entire width of the raceway. The seating and contact surfaces should not be interrupted by grooves, holes or other recesses. The accuracy of mating parts must meet specific requirements ➤*233*|▦ *11* to ➤*234*|▦ *13*.

Radial location of bearings – fit recommendations

For secure radial location, tight fits are necessary

In addition to supporting the rings adequately, the bearings must also be securely located in a radial direction, to prevent creep of the bearing rings on the mating parts under load. This is generally achieved by means of tight fits between the bearing rings and the mating parts. If the rings are not secured adequately or correctly, this can cause severe damage to the bearings and adjacent machine parts. Influencing factors, such as the conditions of rotation, magnitude of the load, internal clearance, temperature conditions, design of the mating parts and the mounting and dismounting options must be taken into consideration in the selection of fits.

If shock type loads occur, tight fits (transition fit or interference fit) are required to prevent the rings from coming loose at any point. Clearance, transition or interference fits ➤*152*|▦ *6* and ➤*160*|▦ *7*.

The following information provided in Technical principles must be taken into consideration in the design of bearing arrangements:

- criteria for selection of fits ➤*146*
- conditions of rotation ➤*147*
- tolerance classes for cylindrical shaft seats (radial bearings) ➤*149*|▦ *2*
- shaft fits ➤*152*|▦ *6*
- tolerance classes for bearing seats in housings (radial bearings) ➤*150*|▦ *4*
- housing fits ➤*160*|▦ *7*

Axial location of bearings – location methods

The bearings must also be securely located in an axial direction

As a tight fit alone is not normally sufficient to also locate the bearing rings securely on the shaft and in the housing bore in an axial direction, this must usually be achieved by means of an additional axial location or retention method. The axial location of the bearing rings must be matched to the type of bearing arrangement. Shaft and housing shoulders, housing covers, nuts, spacer rings and retaining rings etc., are fundamentally suitable.

Axial adjustment by means of spring element to reduce noise

✎ Example: single row deep groove ball bearing, bearing arrangement in an electric motor

If the bearing arrangement is to run particularly quietly, this can be achieved economically with commonly available spring elements ➤*233*|⧉ *13*. The bearings in the figure must only support guidance forces in an axial direction. The inner rings have a tight fit on the shaft and are abutted on the shaft shoulders. The outer rings are mounted with a sliding seat. A spring washer is fitted between the outer ring of the right hand bearing and the cover collar. The bearings are thus axially adjusted by the tensioned springs. This achieves particularly smooth running.

⧉ 13
Bearing arrangement axially adjusted with a spring washer

① *Deep groove ball bearing*
② *Spring washer*
③ *Cover*

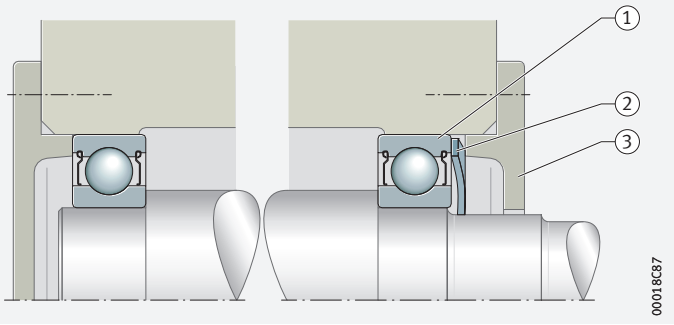

Dimensional, geometrical and running accuracy of the bearing seats

✎ For bearings with tolerance class Normal, a minimum of IT6 should be provided for the shaft seat and a minimum of IT7 for the housing seat

The accuracy of the cylindrical bearing seat on the shaft and in the housing should correspond to the accuracy of the bearing used. For deep groove ball bearings with the tolerance class Normal, the shaft seat should correspond to a minimum of standard tolerance grade IT6 and the housing seat to a minimum of IT7; with tolerance class 6, the shaft seat should correspond to a minimum of IT5 and the housing seat to a minimum of IT6. Guide values for the geometrical and positional tolerances of bearing seating surfaces ➤*233*|▦ *11*. Tolerances t_1 to t_3 in accordance with ➤*170*|⧉ *11*. Numerical values for IT grades ➤*234*|▦ *12*.

▦ 11
Guide values for the geometrical and positional tolerances of bearing seating surfaces

Bearing tolerance class		Bearing seating surface	Standard tolerance grades to ISO 286-1 (IT grades)			
to ISO 492	to DIN 620		Diameter tolerance	Roundness tolerance t_1	Parallelism tolerance t_2	Total axial runout tolerance of abutment shoulder t_3
Normal	PN (P0)	Shaft	IT6 (IT5)	Circumferential load IT4/2	Circumferential load IT4/2	IT4
				Point load IT5/2	Point load IT5/2	
		Housing	IT7 (IT6)	Circumferential load IT5/2	Circumferential load IT5/2	IT5
				Point load IT6/2	Point load IT6/2	
6	P6	Shaft	IT5	Circumferential load IT3/2	Circumferential load IT3/2	IT3
				Point load IT4/2	Point load IT4/2	
		Housing	IT6	Circumferential load IT4/2	Circumferential load IT4/2	IT4
				Point load IT5/2	Point load IT5/2	

12
Numerical values for ISO standard tolerances (IT grades) to ISO 286-1:2010

IT grade	Nominal dimension in mm							
	over –	3	6	10	18	30	50	80
	incl. 3	6	10	18	30	50	80	120
	Values in µm							
IT3	2	2,5	2,5	3	4	4	5	6
IT4	3	4	4	5	6	7	8	10
IT5	4	5	6	8	9	11	13	15
IT6	6	8	9	11	13	16	19	22
IT7	10	12	15	18	21	25	30	35

continued ▼

12
Numerical values for ISO standard tolerances (IT grades) to ISO 286-1:2010

IT grade	Nominal dimension in mm							
	over 120	180	250	315	400	500	630	800
	incl. 180	250	315	400	500	630	800	1 000
	Values in µm							
IT3	8	10	12	13	15	16	18	21
IT4	12	14	16	18	20	22	25	28
IT5	18	20	23	25	27	32	36	40
IT6	25	29	32	36	40	44	50	56
IT7	40	46	52	57	63	70	80	90

continued ▲

Roughness of cylindrical bearing seating surfaces

✎ Ra must not be too high

The roughness of the bearing seats must be matched to the tolerance class of the bearings. The mean roughness value Ra must not be too high, in order to maintain the interference loss within limits. The shafts must be ground, while the bores must be precision turned. Guide values as a function of the IT grade of bearing seating surfaces ➤ *234* | 13.

13
Roughness values for cylindrical bearing seating surfaces – guide values

Nominal diameter of the bearing seat d (D) mm		Recommended mean roughness value for ground bearing seats Ramax µm			
		Diameter tolerance (IT grade)			
over	incl.	IT7	IT6	IT5	IT4
–	80	1,6	0,8	0,4	0,2
80	500	1,6	1,6	0,8	0,4
500	1 250	3,2[1)]	1,6	1,6	0,8

1) *For the mounting of bearings using the hydraulic method, a value Ra = 1,6 µm must not be exceeded.*

Mounting dimensions for the contact surfaces of bearing rings

✎ The contact surfaces for the rings must be of sufficient height

The mounting dimensions of the shaft and housing shoulders, and spacer rings etc., must ensure that the contact surfaces for the bearing rings are of sufficient height. However, they must also reliably prevent rotating parts of the bearing from grazing stationary parts. Proven mounting dimensions for the radii and diameters of the abutment shoulders are given in the product tables. These dimensions are limiting dimensions (maximum or minimum dimensions); the actual values should not be higher or lower than specified.

1.17 Mounting and dismounting

The mounting and dismounting options for deep groove ball bearings, by thermal, hydraulic or mechanical methods, must be taken into consideration in the design of the bearing position.

✎ Ensure that the bearings are not damaged during mounting.

Deep groove ball bearings are not separable. In the mounting of non-separable bearings, the mounting forces must always be applied to the bearing ring with a tight fit.

Schaeffler Mounting Handbook

✎ Rolling bearings must be handled with great care

Rolling bearings are well-proven precision machine elements for the design of economical and reliable bearing arrangements, which offer high operational security. In order that these products can function correctly and achieve the envisaged operating life without detrimental effect, they must be handled with care.

The Schaeffler Mounting Handbook MH 1 gives comprehensive information about the correct storage, mounting, dismounting and maintenance of rotary rolling bearings *https://www.schaeffler.de/std/1D53*.
It also provides information which should be observed by the designer, in relation to the mounting, dismounting and maintenance of bearings, in the original design of the bearing position. This book is available from Schaeffler on request.

1.18 Legal notice regarding data freshness

✎ The further development of products may also result in technical changes to catalogue products

Of central interest to Schaeffler is the further development and optimisation of its products and the satisfaction of its customers. In order that you, as the customer, can keep yourself optimally informed about the progress that is being made here and with regard to the current technical status of the products, we publish any product changes which differ from the printed version in our electronic product catalogue.

§ We therefore reserve the right to make changes to the data and illustrations in this catalogue. This catalogue reflects the status at the time of printing. More recent publications released by us (as printed or digital media) will automatically precede this catalogue if they involve the same subject. Therefore, please always use our electronic product catalogue to check whether more up-to-date information or modification notices exist for your desired product.

Link to electronic product catalogue

The following link will take you to the Schaeffler electronic product catalogue: *https://medias.schaeffler.com*.

1.19 Further information

In addition to the data in this chapter, the following chapters in Technical principles must also be observed in the design of bearing arrangements:

- Determining the bearing size ➤*34*
- Rigidity ➤*54*
- Friction and increases in temperature ➤*56*
- Speeds ➤*64*
- Bearing data ➤*97*
- Lubrication ➤*70*
- Sealing ➤*185*
- Design of bearing arrangements ➤*141*
- Mounting and dismounting ➤*194*

Deep groove ball bearings

Single row

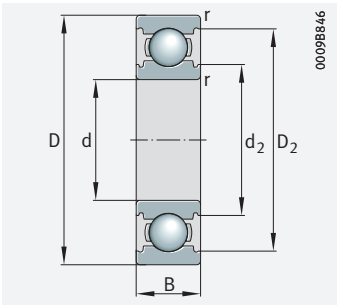

Generation C, open

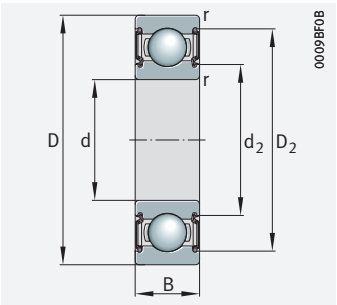

With seal 2BRS, 2HRS, 2Z

d = 2 – 9 mm

Main dimensions			Basic load ratings		Fatigue limit load	Limiting speed	Speed rating	Factor	Mass	Designation
d	D	B	dyn. C_r	stat. C_{0r}	C_{ur}	n_G	$n_{\vartheta r}$	f_0	m	➤*229*|*1.12* ➤*230*|*1.13*
			N	N	N	min^{-1}	min^{-1}		≈ kg	
2	5	2,3	169	50	1,3	137 000	–	13	0,001	**682-2Z**
	6	3	330	99	2,7	112 000	–	11,5	–	**692-2Z**
	7	3,5	386	128	3,5	102 000	82 000	12,7	0,001	**602-2Z**
3	7	3	311	112	2,95	103 000	–	14	0,001	**683-2Z**
	8	4	559	179	4,8	87 000	–	11,8	0,001	**693-2Z**
	10	4	641	226	11,7	81 000	59 000	12,8	0,002	**623-2Z**
4	9	4	641	226	6	81 000	–	12,8	0,002	**684-2Z**
	12	4	959	347	9,3	69 000	55 000	12,4	0,002	**604-2Z**
	13	5	1 306	487	25,5	61 000	44 500	12,3	0,003	**624-2Z**
	16	5	1 735	671	23	53 000	32 500	12,4	0,006	**634-2Z**
5	11	5	716	283	7,5	71 000	–	14	0,002	**685-2Z**
	14	5	1 330	507	13,8	58 000	45 000	12,8	0,004	**605-2Z**
	16	5	1 735	671	23	53 000	36 000	12,4	0,005	**625-2Z**
	19	6	2 750	1 050	55	45 000	27 500	12,2	0,009	**635-2Z**
6	13	5	1 080	438	11,7	61 000	–	13,7	0,003	**686-2Z**
	17	6	2 260	838	52	48 000	41 000	11,4	0,006	**606-2Z**
	19	6	2 614	1 053	67	45 000	30 500	12,3	0,008	**626-2Z**
7	14	5	1 180	511	13,6	58 000	–	14,2	0,003	**687-2Z**
	19	6	2 340	889	30,5	45 500	37 000	12,1	0,008	**607-2Z**
	22	7	3 297	1 368	74	40 000	28 000	12,4	0,014	**627-2Z**
8	16	5	1 260	590	15,7	53 000	–	14,8	0,004	**688-2Z**
	22	7	3 297	1 368	74	40 000	31 500	12,4	0,012	**608-2Z**
	24	8	3 330	1 410	59	39 000	29 000	12,8	0,018	**628-2Z**
9	17	5	1 330	664	17,6	51 000	–	15,1	0,005	**689-2Z**
	24	7	3 350	1 430	43	38 000	28 500	13	0,016	**609-2Z**
	26	8	5 300	1 970	136	44 500	27 000	12,4	0,019	**629-C**
	26	8	5 300	1 970	136	28 500	–	12,4	0,02	**629-C-2HRS**
	26	8	5 300	1 970	136	38 000	27 000	12,4	0,02	**629-C-2Z**

medias *https://www.schaeffler.de/std/1F9A*

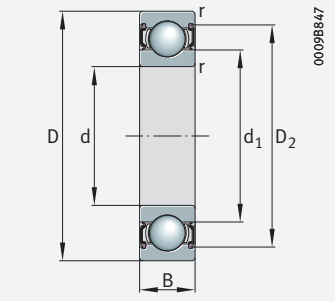

With seal 2Z

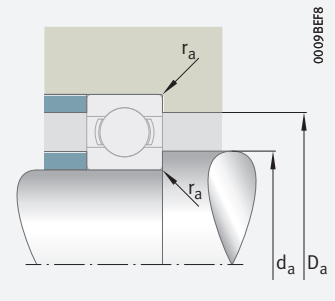

Mounting dimensions

Dimensions						Mounting dimensions		
d	r	D_1	D_2	d_1	d_2	d_a	D_a	r_a
	min.	≈	≈	≈		min.	max.	max.
2	0,08	–	4,4	2,7	–	2,52	4,48	0,08
	0,15	–	5,4	3	–	2,8	5,2	0,15
	0,15	–	6,2	–	3,15	2,8	6,2	0,15
3	0,1	–	6,35	–	3,85	3,6	6,4	0,1
	0,15	–	7,25	4,35	–	3,8	7,2	0,15
	0,15	–	7,98	–	4,35	4,4	8,6	0,15
4	0,1	–	8,1	5,2	–	4,6	8,4	0,1
	0,2	–	9,85	–	5,6	5,4	10,6	0,2
	0,2	–	11,35	–	6	5,8	11,2	0,2
	0,3	–	13	–	6,7	6,4	13,6	0,3
5	0,15	–	9,9	–	6,2	5,8	10,2	0,15
	0,2	–	12,2	–	6,9	6,4	12,6	0,2
	0,3	–	13,8	–	7,5	7,4	13,6	0,3
	0,3	–	16,5	–	8,5	7,4	16,6	0,3
6	0,15	–	11,7	–	7,4	6,8	12,2	0,15
	0,3	–	14,8	–	8,2	8	15	0,3
	0,3	–	16,5	–	8,5	8,4	16,6	0,3
7	0,15	–	12,7	–	8,5	7,8	13,2	0,15
	0,3	–	16,5	–	9	9	17	0,3
	0,3	–	19,03	–	10,5	9,4	19,6	0,3
8	0,2	–	14,2	–	9,65	9,4	14,6	0,2
	0,3	–	19,03	–	10,5	10	20	0,3
	0,3	–	19,9	–	11,9	10,4	21,6	0,3
9	0,2	–	15,2	–	10,7	10,4	15,6	0,2
	0,3	–	20,48	–	12,1	11	22	0,3
	0,3	–	23,1	–	13,6	11,4	23,6	0,3
	0,3	–	23,1	–	13,6	11,4	23,6	0,3
	0,3	–	23,1	–	13,6	11,4	23,6	0,3

Deep groove ball bearings

Single row

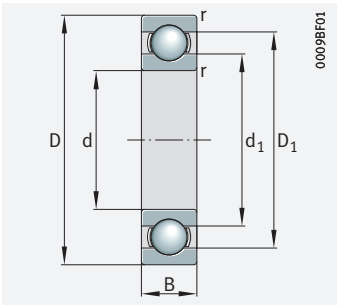

Open

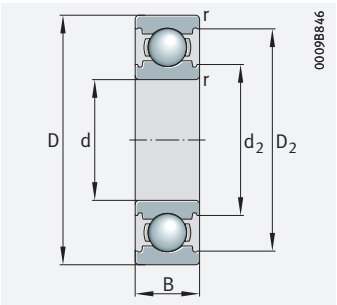

Generation C, open

d = 10 – 10 mm

Main dimensions			Basic load ratings		Fatigue limit load	Limiting speed	Speed rating	Factor	Mass	Designation
d	D	B	dyn. C_r	stat. C_{0r}	C_{ur}	n_G	$n_{\vartheta r}$	f_0	m	➤*229*|*1.12* ➤*230*|*1.13*
			N	N	N	min^{-1}	min^{-1}		≈ kg	
10	19	5	1 720	840	58	54 000	27 500	14,8	–	**61800**
	19	5	1 720	840	58	21 000	–	14,8	0,006	**61800-2RSR**
	19	5	1 720	840	58	46 000	27 500	14,8	0,006	**61800-2Z**
	22	6	2 700	1 270	67	48 000	27 000	14	0,01	**61900**
	22	6	2 700	1 270	67	19 200	–	14	0,012	**61900-2RSR**
	22	6	2 700	1 020	67	41 000	27 000	14	0,01	**61900-2Z**
	26	8	5 300	1 970	136	44 500	30 000	12,4	0,017	**6000-C**
	26	8	5 300	1 970	136	28 500	–	12,4	0,018	**6000-C-2HRS**
	26	8	5 300	1 970	136	38 000	30 000	12,4	0,019	**6000-C-2Z**
	30	9	7 000	2 600	181	40 500	26 000	12	0,029	**6200-C**
	30	9	7 000	2 600	181	26 000	–	12	0,03	**6200-C-2HRS**
	30	9	7 000	2 600	181	34 500	26 000	12	0,03	**6200-C-2Z**
	30	14	5 970	2 630	200	16 700	–	12,2	0,044	**62200-2RSR**
	35	11	8 600	3 450	237	31 000	21 100	11,3	0,053	**6300**
	35	11	8 600	3 450	179	14 800	–	11,3	0,057	**6300-2RSR**
	35	11	8 600	3 450	237	26 500	21 100	11,3	0,054	**6300-2Z**
	35	17	8 100	3 440	270	15 000	–	11,2	0,06	**62300-2RSR**

medias *https://www.schaeffler.de/std/1F9A*

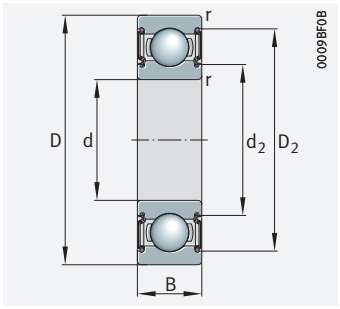

With seal 2BRS, 2HRS, 2RSR, 2Z

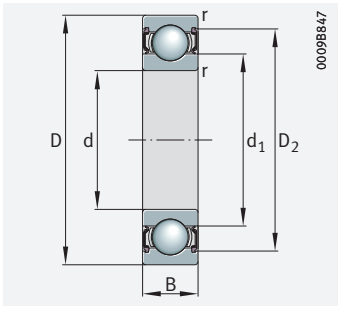

With seal 2RSR

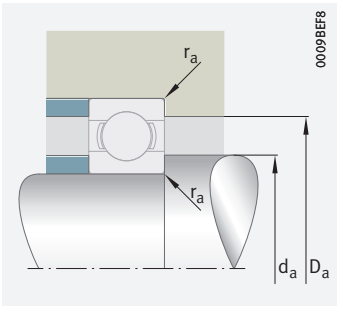

Mounting dimensions

Dimensions						Mounting dimensions		
d	r min.	D_1 ≈	D_2 ≈	d_1 ≈	d_2	d_a min.	D_a max.	r_a max.
10	0,3	–	–	–	–	12	17	0,3
	0,3	–	17,2	–	11,8	12	17	0,3
	0,3	–	17,2	–	11,8	12	17	0,3
	0,3	18,2	–	13,9	–	12	20	0,3
	0,3	–	19,4	–	13,2	12	20	0,3
	0,3	–	19,4	–	13,2	12	20	0,3
	0,3	–	23,09	–	13,69	12	24	0,3
	0,3	–	23,09	–	13,69	12	24	0,3
	0,3	–	23,09	–	13,69	12	24	0,3
	0,6	–	25,64	–	15,14	14,2	25,8	0,6
	0,6	–	25,64	–	15,14	14,2	25,8	0,6
	0,6	–	25,64	–	15,14	14,2	25,8	0,6
	0,6	–	25,75	16	–	14,2	25,8	0,6
	0,6	27,08	–	18,1	–	14,2	30,8	0,6
	0,6	–	29,5	19,4	–	14,2	30,8	0,6
	0,6	–	28,65	18,1	–	14,2	30,8	0,6
	0,6	–	30,2	17,85	–	14,2	30,8	0,6

Deep groove ball bearings

Single row

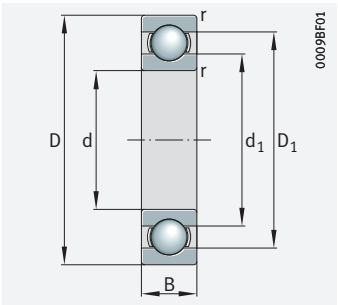

Open

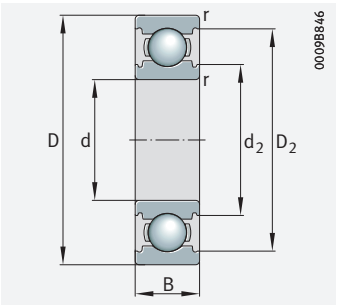

Generation C, open

d = 12 – 12 mm

Main dimensions			Basic load ratings		Fatigue limit load	Limiting speed	Speed rating	Factor	Mass	Designation
d	D	B	dyn. C_r	stat. C_{0r}	C_{ur}	n_G	$n_{\vartheta r}$	f_0	m	➤*229*|*1.12* ➤*230*|*1.13*
			N	N	N	min^{-1}	min^{-1}		≈ kg	
12	21	5	1 920	1 040	47,5	50 000	23 500	15,3	0,007	**61801**
	21	5	1 920	1 040	47,5	18 100	–	15,3	0,007	**61801-2RSR**
	21	5	1 920	1 040	47,5	42 500	23 500	15,3	0,006	**61801-2Z**
	24	6	2 890	1 460	77	45 000	23 300	14,5	0,012	**61901**
	24	6	2 890	1 460	77	16 700	–	14,5	0,012	**61901-2RSR**
	24	6	2 890	1 460	77	38 000	23 300	14,5	0,012	**61901-2Z**
	28	8	5 900	2 370	164	42 500	26 000	13,1	0,019	**6001-C**
	28	8	5 900	2 370	164	24 900	–	13,1	0,02	**6001-C-2HRS**
	28	8	5 900	2 370	164	36 000	26 000	13,1	0,021	**6001-C-2Z**
	32	10	8 000	3 100	213	37 000	24 600	12,3	0,037	**6201-C**
	32	10	8 000	3 100	213	22 500	–	12,3	0,036	**6201-C-2HRS**
	32	10	8 000	3 100	213	31 500	24 600	12,3	0,036	**6201-C-2Z**
	32	14	6 890	3 090	243	14 700	–	12,3	0,049	**62201-2RSR**
	37	17	9 710	4 190	330	13 900	–	11,1	0,085	**62301-2RSR**
	37	12	11 500	4 200	290	31 000	21 900	11,1	0,062	**6301-C**
	37	12	11 500	4 200	290	21 700	–	11,1	0,059	**6301-C-2HRS**
	37	12	11 500	4 200	290	26 500	21 900	11,1	0,059	**6301-C-2Z**

medias *https://www.schaeffler.de/std/1F9A*

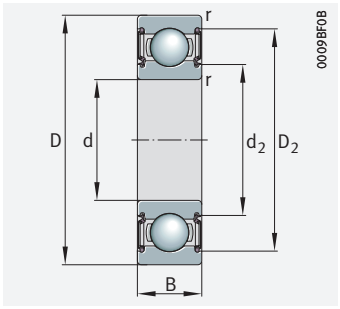

With seal 2BRS, 2HRS, 2RSR, 2Z

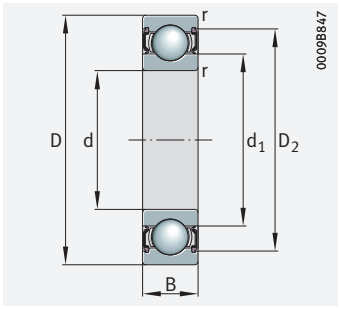

With seal 2RSR

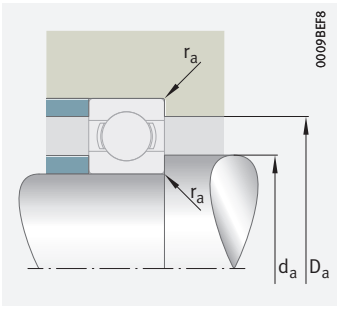

Mounting dimensions

Dimensions						Mounting dimensions		
d	r min.	D_1 ≈	D_2 ≈	d_1 ≈	d_2	d_a min.	D_a max.	r_a max.
12	0,3	18,3	–	14,8	–	14	19	0,3
	0,3	–	19,2	–	13,8	14	19	0,3
	0,3	–	19,2	–	13,8	14	19	0,3
	0,3	20,3	–	16	–	14	22	0,3
	0,3	–	21,4	–	15,4	14	22	0,3
	0,3	–	21,4	–	15,4	14	22	0,3
	0,3	–	25,1	–	15,69	14	26	0,3
	0,3	–	25,1	–	15,69	14	26	0,3
	0,3	–	25,1	–	15,69	14	26	0,3
	0,6	–	27,92	–	17,34	16,2	27,8	0,6
	0,6	–	27,92	–	17,34	16,2	27,8	0,6
	0,6	–	27,92	–	17,34	16,2	27,8	0,6
	0,6	–	27,93	18,25	–	16,2	27,8	0,6
	1	–	32,6	19,25	–	17,6	31,4	1
	1	–	32	–	17,97	17,6	31,4	1
	1	–	32	–	17,97	17,6	31,4	1
	1	–	32	–	17,97	17,6	31,4	1

Deep groove ball bearings

Single row

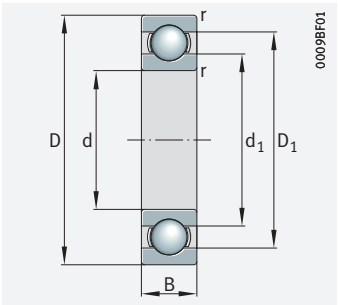

Open

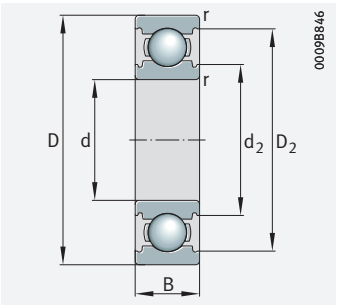

Generation C, open

d = 15 – 15 mm

Main dimensions			Basic load ratings		Fatigue limit load	Limiting speed	Speed rating	Factor	Mass	Designation
d	D	B	dyn. C_r	stat. C_{0r}	C_{ur}	n_G	$n_{\vartheta r}$	f_0	m	➤ *229* | *1.12* ➤ *230* | *1.13*
			N	N	N	min^{-1}	min^{-1}		≈ kg	
15	24	5	2 070	1 260	57	45 000	19 200	15,9	0,008	**61802**
	24	5	2 070	1 260	57	15 000	–	15,9	0,008	**61802-2RSR**
	24	5	2 070	1 260	57	38 000	19 200	15,9	–	**61802-2Z**
	28	7	4 330	2 250	132	38 000	20 600	14,3	0,019	**61902**
	28	7	4 330	2 250	132	14 200	–	14,3	0,019	**61902-2RSR**
	28	7	4 330	2 250	132	32 000	20 600	14,3	0,019	**61902-2Z**
	32	8	5 590	2 840	191	33 500	20 000	13,9	0,025	**16002**
	32	9	6 300	2 850	191	37 000	23 200	14	0,027	**6002-C**
	32	9	6 300	2 850	191	20 300	–	14	0,029	**6002-C-2HRS**
	32	9	6 300	2 850	191	31 500	23 200	14	0,029	**6002-C-2Z**
	35	11	8 900	3 750	260	33 000	21 900	13	0,042	**6202-C**
	35	11	8 900	3 750	260	19 400	–	13	0,044	**6202-C-2HRS**
	35	11	8 900	3 750	260	28 000	21 900	13	0,044	**6202-C-2Z**
	35	14	7 730	3 760	220	12 700	–	13,1	0,056	**62202-2RSR**
	42	17	11 330	5 350	420	11 500	–	12,1	0,106	**62302-2RSR**
	42	13	13 300	5 300	370	27 500	19 200	12	0,081	**6302-C**
	42	13	13 300	5 300	370	17 700	–	12	0,083	**6302-C-2HRS**
	42	13	13 300	5 300	370	23 500	19 200	12	0,084	**6302-C-2Z**

medias *https://www.schaeffler.de/std/1F9A*

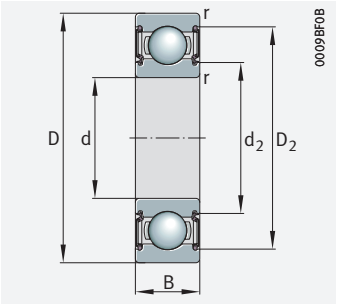

With seal 2BRS, 2HRS, 2RSR, 2Z

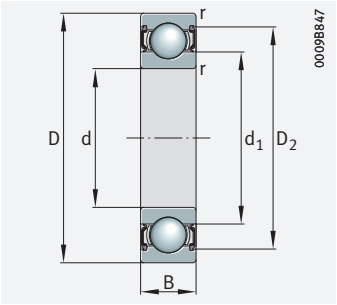

With seal 2RSR, 2Z

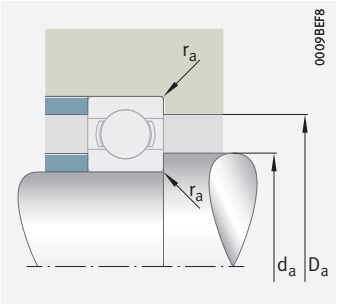

Mounting dimensions

Dimensions						Mounting dimensions		
d	r min.	D_1 ≈	D_2 ≈	d_1 ≈	d_2	d_a min.	D_a max.	r_a max.
15	0,3	21,3	–	17,8	–	17	22	0,3
	0,3	–	22,2	–	16,8	17	22	0,3
	0,3	–	22,2	–	16,8	17	22	0,3
	0,3	24,2	–	18,8	–	17	26	0,3
	0,3	–	25,3	18,8	–	17	26	0,3
	0,3	–	25,3	18,8	–	17	26	0,3
	0,3	26,8	–	20,5	–	17	30	0,3
	0,3	–	28,75	–	19,18	17	30	0,3
	0,3	–	28,75	–	19,18	17	30	0,3
	0,3	–	28,75	–	19,18	17	30	0,3
	0,6	–	30,92	–	20,08	19,2	30,8	0,6
	0,6	–	30,92	–	20,08	19,2	30,8	0,6
	0,6	–	30,92	–	20,08	19,2	30,8	0,6
	0,6	–	30,56	21,05	–	19,2	30,8	0,6
	1	–	36,16	23,2	–	20,6	36,4	1
	1	–	36	–	21,97	20,6	36,4	1
	1	–	36	–	21,97	20,6	36,4	1
	1	–	36	–	21,97	20,6	36,4	1

Deep groove ball bearings

Single row

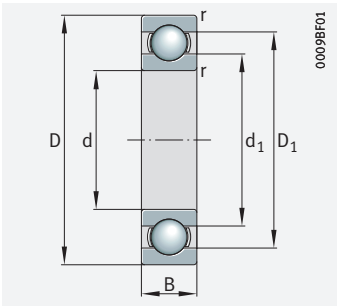

Open

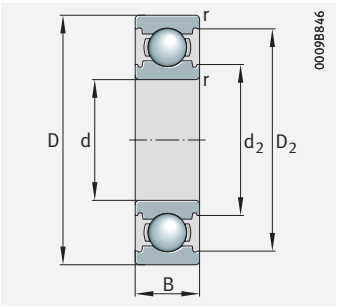

Generation C, open

d = 17 – 17 mm

Main dimensions			Basic load ratings		Fatigue limit load	Limiting speed	Speed rating	Factor	Mass	Designation
d	D	B	dyn. C_r	stat. C_{0r}	C_{ur}	n_G	$n_{\vartheta r}$	f_0	m	➤*229*|*1.12* ➤*230*|*1.13*
			N	N	N	min^{-1}	min^{-1}		≈ kg	
17	26	5	2 230	1 460	67	41 500	17 100	16,1	0,008	**61803**
	26	5	2 230	1 460	67	13 500	–	16,1	0,008	**61803-2RSR**
	26	5	2 230	1 460	67	35 000	17 100	16,1	–	**61803-2Z**
	30	7	4 590	2 560	150	34 500	17 800	14,8	0,014	**61903**
	30	7	4 590	2 560	150	12 700	–	14,8	0,02	**61903-2RSR**
	30	7	4 590	2 560	150	29 000	17 800	14,8	0,017	**61903-2Z**
	35	10	6 400	3 250	162	31 000	20 300	14,3	0,038	**6003**
	35	8	6 000	3 250	207	31 000	17 700	14,3	0,032	**16003**
	35	10	6 400	3 250	162	11 800	–	14,3	0,04	**6003-2RSR**
	35	10	6 400	3 250	162	26 000	20 300	14,3	0,037	**6003-2Z**
	40	12	11 000	4 750	330	29 000	20 100	13	0,061	**6203-C**
	40	12	11 000	4 750	330	16 900	–	13	0,066	**6203-C-2HRS**
	40	12	11 000	4 750	330	24 600	20 100	13	0,067	**6203-C-2Z**
	40	16	9 555	4 760	355	11 100	–	13,1	0,085	**62203-2RSR**
	47	19	13 630	6 620	520	9 700	–	12,4	0,152	**62303-2RSR**
	47	14	15 800	6 500	450	24 500	17 400	12,2	0,114	**6303-C**
	47	14	15 800	6 500	450	15 700	–	12,2	0,118	**6303-C-2HRS**
	47	14	15 800	6 500	450	20 800	17 400	12,2	0,117	**6303-C-2Z**
	62	17	23 800	11 500	780	16 200	11 600	12,4	0,27	**6403**

medias *https://www.schaeffler.de/std/1F9A*

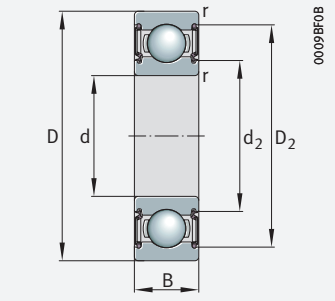

With seal 2BRS, 2HRS, 2RSR, 2Z

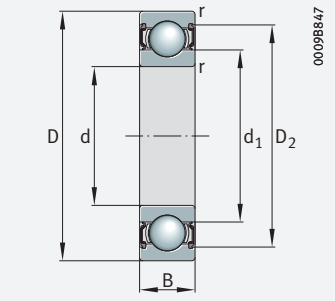

With seal 2RSR, 2Z

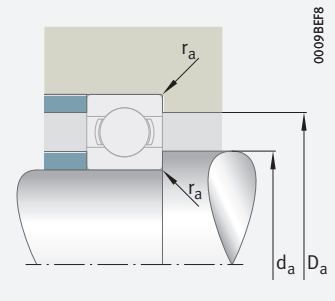

Mounting dimensions

Dimensions						Mounting dimensions		
d	r min.	D_1 ≈	D_2 ≈	d_1 ≈	d_2	d_a min.	D_a max.	r_a max.
17	0,3	23,3	–	19,8	–	19	24	0,3
	0,3	–	24,2	–	18,8	19	24	0,3
	0,3	–	24,2	–	18,8	19	24	0,3
	0,3	26,8	–	21	–	19	28	0,3
	0,3	–	27,8	21	–	19	28	0,3
	0,3	–	27,8	21	–	19	28	0,3
	0,3	29,51	–	22,65	–	19	33	0,3
	0,3	29,46	–	22,8	–	19	33	0,3
	0,3	–	30,81	22,65	–	19	33	0,3
	0,3	–	30,81	22,65	–	19	33	0,3
	0,6	–	34,84	–	22,97	21,2	35,8	0,6
	0,6	–	34,84	–	22,97	21,2	35,8	0,6
	0,6	–	34,84	–	22,97	21,2	35,8	0,6
	0,6	–	35,45	24,1	–	21,2	35,8	0,6
	1	–	41,07	27,45	–	22,6	41,4	1
	1	–	40,07	–	24,77	22,6	41,4	1
	1	–	40,07	–	24,77	22,6	41,4	1
	1	–	40,07	–	24,77	22,6	41,4	1
	1,1	50,18	–	36,4	–	26	53	1

Deep groove ball bearings

Single row

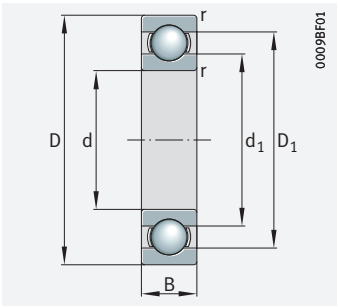

Open

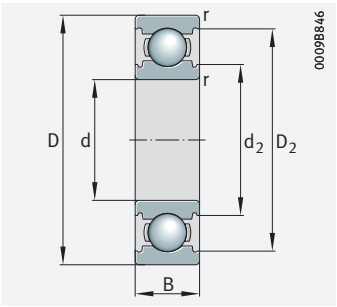

Generation C, open

d = 20 – 20 mm

Main dimensions			Basic load ratings		Fatigue limit load	Limiting speed	Speed rating	Factor	Mass	Designation
d	D	B	dyn. C_r	stat. C_{0r}	C_{ur}	n_G	$n_{\vartheta r}$	f_0	m	➤*229*|*1.12* ➤*230*|*1.13*
			N	N	N	min^{-1}	min^{-1}		≈ kg	
20	32	7	4 020	2 460	111	33 500	17 600	15,4	0,018	**61804**
	32	7	4 020	2 460	111	11 500	–	15,4	0,018	**61804-2RSR**
	32	7	4 020	2 460	111	28 500	17 600	15,4	–	**61804-2Z**
	37	9	6 380	3 680	233	28 500	17 000	14,8	0,04	**61904**
	37	9	6 380	3 680	233	10 600	–	14,8	0,037	**61904-2RSR**
	37	9	6 380	3 680	233	24 200	17 000	14,8	0,037	**61904-2Z**
	42	8	7 910	4 480	240	26 000	13 800	16,5	0,048	**16004**
	42	12	10 600	5 000	340	27 500	19 700	13,8	0,062	**6004-C**
	42	12	10 600	5 000	340	15 300	–	13,8	0,066	**6004-C-2HRS**
	42	12	10 600	5 000	340	23 200	19 700	13,8	0,065	**6004-C-2Z**
	47	14	14 700	6 600	455	24 300	18 100	13,1	0,1	**6204-C**
	47	14	14 700	6 600	455	14 500	–	13,1	0,104	**6204-C-2HRS**
	47	14	14 700	6 600	455	20 600	18 100	13,1	0,105	**6204-C-2Z**
	47	18	12 790	6 580	490	9 400	–	13,1	0,14	**62204-2RSR**
	52	15	16 900	7 900	540	19 800	14 400	12,4	0,144	**6304**
	52	21	15 940	7 880	560	8 900	–	12,4	0,2	**62304-2RSR**
	52	15	16 900	7 900	540	8 800	–	12,4	0,155	**6304-2RSR**
	52	15	16 900	7 900	540	16 800	14 400	12,4	0,146	**6304-2Z**
	72	19	30 500	15 000	860	14 000	11 700	11	0,414	**6404**

medias *https://www.schaeffler.de/std/1F9A*

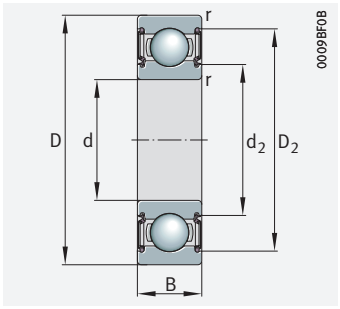

With seal 2BRS, 2HRS, 2RSR, 2Z

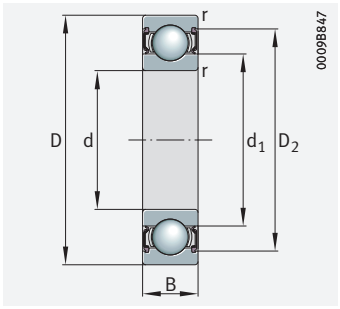

With seal 2RSR, 2Z

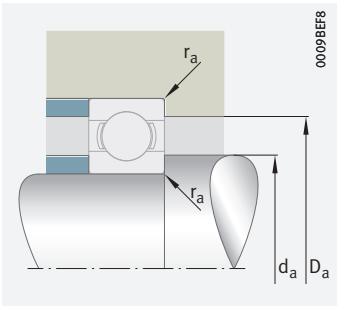

Mounting dimensions

Dimensions						Mounting dimensions		
d	r min.	D_1 ≈	D_2 ≈	d_1 ≈	d_2	d_a min.	D_a max.	r_a max.
20	0,3	28,2	–	23,2	–	22	30	0,3
	0,3	–	29,5	–	22,6	22	30	0,3
	0,3	–	29,5	–	22,6	22	30	0,3
	0,3	32	–	25,2	–	22	35	0,3
	0,3	–	33,5	–	23,7	22	35	0,3
	0,3	–	33,5	–	23,7	22	35	0,3
	0,3	35,04	–	28,4	–	22	40	0,3
	0,6	–	37,38	–	25,38	23,2	38,8	0,6
	0,6	–	37,38	–	25,38	23,2	38,8	0,6
	0,6	–	37,38	–	25,38	23,2	38,8	0,6
	1	–	41	–	26,77	25,6	41,4	1
	1	–	41	–	26,77	25,6	41,4	1
	1	–	41	–	26,77	25,6	41,4	1
	1	–	41,47	28,5	–	25,6	41,4	1
	1,1	41,95	–	30,3	–	27	45	1
	1,1	–	45,1	30	–	27	45	1
	1,1	–	44,4	30,3	–	27	45	1
	1,1	–	44,4	30,3	–	27	45	1
	1,1	55,8	–	37,5	–	29	63	1

Deep groove ball bearings

Single row

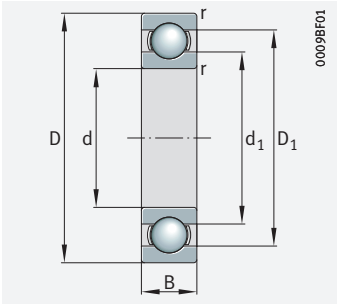

Open

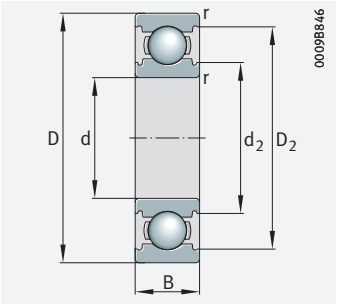

Generation C, open

d = 25 – 25 mm

Main dimensions			Basic load ratings		Fatigue limit load	Limiting speed	Speed rating	Factor	Mass	Designation
d	D	B	dyn. C_r	stat. C_{0r}	C_{ur}	n_G	$n_{\vartheta r}$	f_0	m	➤*229*|*1.12* ➤*230*|*1.13*
			N	N	N	min^{-1}	min^{-1}		≈ kg	
25	37	7	4 300	2 940	132	28 000	13 900	16	0,023	**61805**
	37	7	4 300	2 940	132	9 500	–	16	0,021	**61805-2RSR**
	37	7	4 300	2 940	132	24 000	13 900	16	–	**61805-2Z**
	42	9	7 010	4 550	290	24 200	13 500	15,4	0,042	**61905**
	42	9	7 010	4 550	290	8 700	–	15,4	0,047	**61905-2RSR**
	42	9	7 010	4 550	290	20 500	13 500	15,4	0,045	**61905-2Z**
	47	12	12 600	6 500	420	23 700	16 400	14,3	0,07	**6005-C**
	47	8	8 860	5 610	325	22 200	11 600	15,1	0,053	**16005**
	47	12	12 600	6 500	420	12 900	–	14,3	0,075	**6005-C-2HRS**
	47	12	12 600	6 500	420	20 200	16 400	14,3	0,074	**6005-C-2Z**
	52	15	15 900	7 800	530	21 600	16 000	13,8	0,121	**6205-C**
	52	15	15 900	7 800	530	12 200	–	13,8	0,127	**6205-C-2HRS**
	52	15	15 900	7 800	530	18 400	16 000	13,8	0,13	**6205-C-2Z**
	52	18	14 020	7 880	540	7 900	–	13,9	0,155	**62205-2RSR**
	62	24	23 620	12 130	840	7 300	–	12,2	0,316	**62305-2RSR**
	62	17	26 500	11 500	790	17 800	13 500	12,4	0,217	**6305-C**
	62	17	26 500	11 500	790	11 300	–	12,4	0,24	**6305-C-2HRS**
	62	17	26 500	11 500	790	15 100	13 500	12,4	0,224	**6305-C-2Z**
	80	21	36 120	19 450	1 340	12 400	10 100	12,2	0,515	**6405**

medias *https://www.schaeffler.de/std/1F9A*

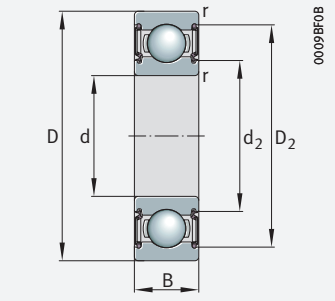

With seal 2BRS, 2HRS, 2RSR, 2Z

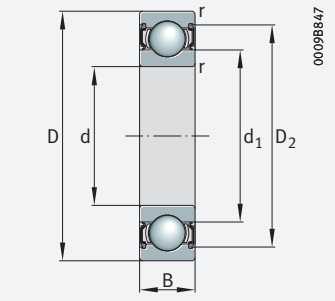

With seal 2RSR, 2Z

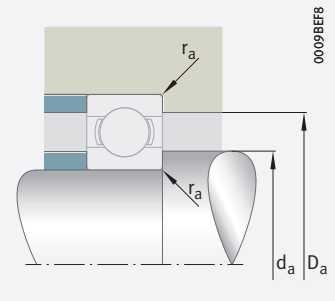

Mounting dimensions

Dimensions						Mounting dimensions		
d	r min.	D_1 ≈	D_2 ≈	d_1 ≈	d_2	d_a min.	D_a max.	r_a max.
25	0,3	33,2	–	28,2	–	27	35	0,3
	0,3	–	34,2	28,2	–	27	35	0,3
	0,3	–	34,2	28,2	–	27	35	0,3
	0,3	37,5	–	30,9	–	27	40	0,3
	0,3	–	39,5	30,9	–	27	40	0,3
	0,3	–	39,5	30,9	–	27	40	0,3
	0,6	–	42,66	–	29,93	28,2	43,8	0,6
	0,3	40,4	–	32,5	–	27	45	0,3
	0,6	–	42,66	–	29,93	28,2	43,8	0,6
	0,6	–	42,66	–	29,93	28,2	43,8	0,6
	1	–	46,01	–	31,61	30,6	46,4	1
	1	–	46,01	–	31,61	30,6	46,4	1
	1	–	46,01	–	31,61	30,6	46,4	1
	1	–	46,3	33,95	–	30,6	46,4	1
	1,1	–	52,75	36,55	–	32	55	1
	1,1	–	53,8	–	34,12	32	55	1
	1,1	–	53,8	–	34,12	32	55	1
	1,1	–	53,8	–	34,12	32	55	1
	1,5	64,25	–	49,3	–	36	69	1,5

Deep groove ball bearings

Single row

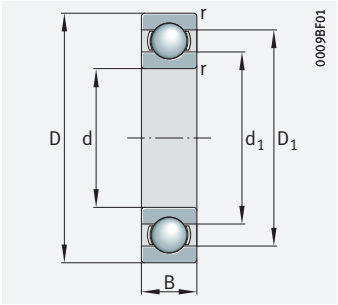

Open

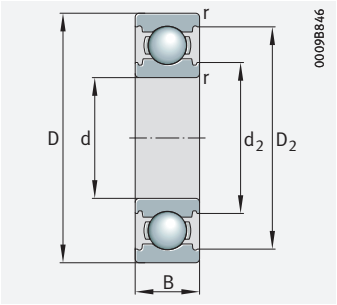

Generation C, open

d = 30 – 30 mm

Main dimensions			Basic load ratings		Fatigue limit load	Limiting speed	Speed rating	Factor	Mass	Designation
d	D	B	dyn. C_r	stat. C_{0r}	C_{ur}	n_G	$n_{\vartheta r}$	f_0	m	➤*229*|*1.12* ➤*230*|*1.13*
			N	N	N	min^{-1}	min^{-1}		≈ kg	
30	42	7	4 450	3 440	154	24 500	11 500	16,5	0,027	**61806**
	42	7	4 450	3 440	154	8 100	–	16,5	0,027	**61806-2RSR**
	42	7	4 450	3 440	154	20 800	11 500	16,5	0,027	**61806-2Z**
	47	9	7 240	5 010	320	21 700	11 900	15,8	0,051	**61906**
	47	9	7 240	5 010	320	7 600	–	15,8	0,053	**61906-2RSR**
	47	9	7 240	5 010	320	18 400	11 900	15,8	0,053	**61906-2Z**
	55	13	14 500	8 300	500	20 100	13 800	14,8	0,107	**6006-C**
	55	9	11 220	7 390	470	18 500	10 000	15,3	0,082	**16006**
	55	13	14 500	8 300	500	10 500	–	14,8	0,113	**6006-C-2HRS**
	55	13	14 500	8 300	500	17 100	13 800	14,8	0,113	**6006-C-2Z**
	62	16	22 000	11 300	770	17 800	13 400	13,8	0,186	**6206-C**
	62	16	22 000	11 300	770	10 200	–	13,8	0,201	**6206-C-2HRS**
	62	16	22 000	11 300	770	15 100	13 400	13,8	0,193	**6206-C-2Z**
	62	20	19 450	11 260	780	6 600	–	13,8	0,25	**62206-2RSR**
	72	27	28 160	15 820	1 090	6 000	–	13,1	0,486	**62306-2RSR**
	72	19	32 000	16 200	1 120	15 100	11 500	13	0,328	**6306-C**
	72	19	32 000	16 200	1 120	9 300	–	13	0,343	**6306-C-2HRS**
	72	19	32 000	16 200	1 120	12 800	11 500	13	0,345	**6306-C-2Z**
	90	23	42 500	23 200	1 350	11 000	9 500	11,9	0,721	**6406**

medias *https://www.schaeffler.de/std/1F9A*

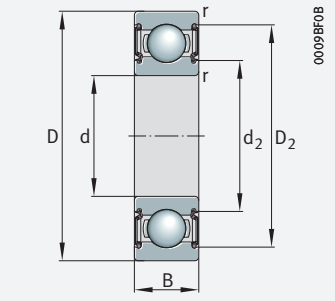

With seal 2BRS, 2HRS, 2RSR, 2Z

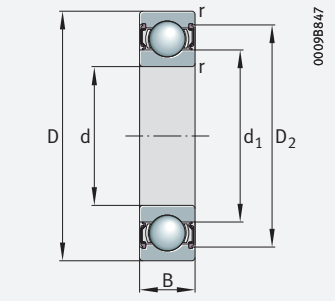

With seal 2RSR, 2Z

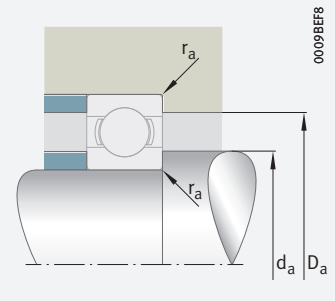

Mounting dimensions

Dimensions						Mounting dimensions		
d	r min.	D_1 ≈	D_2 ≈	d_1 ≈	d_2	d_a min.	D_a max.	r_a max.
30	0,3	38,2	–	33,1	–	32	40	0,3
	0,3	–	39,2	33,1	–	32	40	0,3
	0,3	–	39,2	33,1	–	32	40	0,3
	0,3	42	–	35,1	–	32	45	0,3
	0,3	–	44,1	35,1	–	32	45	0,3
	0,3	–	44,1	35,1	–	32	45	0,3
	1	–	50,22	–	36,67	34,6	50,4	1
	0,3	47,85	–	39,15	–	32	53	0,3
	1	–	50,22	–	36,67	34,6	50,4	1
	1	–	50,22	–	36,67	34,6	50,4	1
	1	–	54,91	–	37,72	35,6	56,4	1
	1	–	54,91	–	37,72	35,6	56,4	1
	1	–	54,91	–	37,72	35,6	56,4	1
	1	–	55,2	40,3	–	35,6	56,4	1
	1,1	–	61,3	44,7	–	37	65	1
	1,1	–	63,29	–	41,44	37	65	1
	1,1	–	63,29	–	41,44	37	65	1
	1,1	–	63,29	–	41,44	37	65	1
	1,5	71,2	–	50,1	–	41	79	1,5

Deep groove ball bearings

Single row

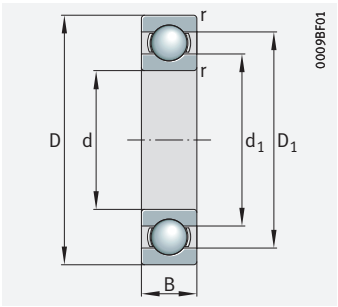

Open

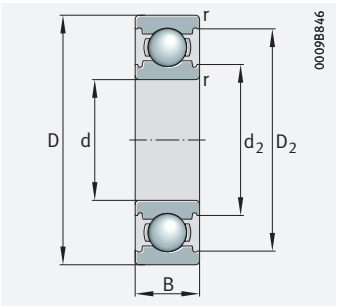

Generation C, open

d = 35 – 35 mm

Main dimensions			Basic load ratings		Fatigue limit load	Limiting speed	Speed rating	Factor	Mass	Designation
d	D	B	dyn. C_r	stat. C_{0r}	C_{ur}	n_G	$n_{\vartheta r}$	f_0	m	➤*229*|*1.12* ➤*230*|*1.13*
			N	N	N	min^{-1}	min^{-1}		≈ kg	
35	47	7	4 740	3 820	175	21 600	9 900	16,4	0,032	**61807**
	47	7	4 740	3 820	175	7 000	–	16,4	0,032	**61807-2RSR**
	47	7	4 740	3 820	175	18 300	9 900	16,4	0,032	**61807-2Z**
	55	10	10 900	7 750	520	17 800	10 000	15,6	0,076	**61907**
	55	10	10 900	7 750	520	6 300	–	15,6	0,076	**61907-2RSR**
	55	10	10 900	7 750	520	15 100	10 000	15,6	0,076	**61907-2Z**
	62	14	17 500	10 300	620	17 700	12 600	14,9	0,14	**6007-C**
	62	9	12 260	8 800	540	16 700	8 900	15,6	0,107	**16007**
	62	14	17 500	10 300	620	9 300	–	14,9	0,148	**6007-C-2HRS**
	62	14	17 500	10 300	620	15 000	12 600	14,9	0,148	**6007-C-2Z**
	72	17	28 000	15 400	1 060	15 000	11 300	13,9	0,291	**6207-C**
	72	17	28 000	15 400	1 060	8 600	–	13,9	0,28	**6207-C-2HRS**
	72	17	28 000	15 400	1 060	12 700	11 300	13,9	0,274	**6207-C-2Z**
	72	23	25 670	15 300	1 060	5 700	–	13,8	0,384	**62207-2RSR**
	80	31	33 320	19 150	1 330	5 300	–	13,1	0,65	**62307-2RSR**
	80	21	37 000	19 100	1 330	13 600	10 900	13,1	0,471	**6307-C**
	80	21	37 000	19 100	1 330	8 300	–	13,1	0,49	**6307-C-2HRS**
	80	21	37 000	19 100	1 330	11 500	10 900	13,1	0,488	**6307-C-2Z**
	100	25	56 000	31 500	2 240	9 500	7 900	12,9	0,96	**6407**

medias *https://www.schaeffler.de/std/1F9A*

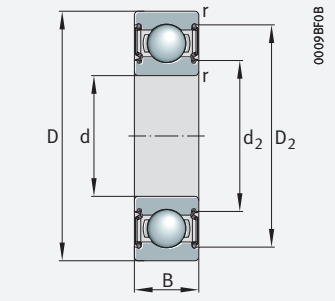

With seal 2BRS, 2HRS, 2RSR, 2Z

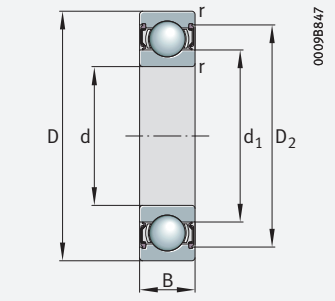

With seal 2RSR, 2Z

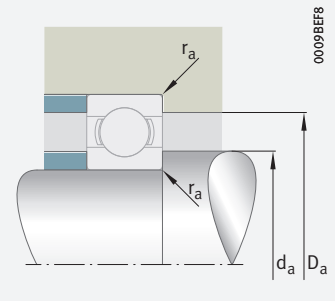

Mounting dimensions

Dimensions						Mounting dimensions		
d	r min.	D_1 ≈	D_2 ≈	d_1 ≈	d_2	d_a min.	D_a max.	r_a max.
35	0,3	42,8	–	38,2	–	37	45	0,3
	0,3	–	44	38,2	–	37	45	0,3
	0,3	–	44	38,2	–	37	45	0,3
	0,6	48,4	–	41,6	–	38,2	51,8	0,6
	0,6	–	50,6	41,6	–	38,2	51,8	0,6
	0,6	–	50,6	41,6	–	38,2	51,8	0,6
	1	–	56,32	–	41,31	39,6	57,4	1
	0,3	52,74	–	44,26	–	37	60	0,3
	1	–	56,32	–	41,31	39,6	57,4	1
	1	–	56,32	–	41,31	39,6	57,4	1
	1,1	–	64,52	–	44,61	42	65	1
	1,1	–	64,52	–	44,61	42	65	1
	1,1	–	64,52	–	44,61	42	65	1
	1,1	–	63,36	47,07	–	42	65	1
	1,5	–	70,1	50,07	–	44	71	1,5
	1,5	–	69,69	–	46,18	44	71	1,5
	1,5	–	69,69	–	46,18	44	71	1,5
	1,5	–	69,69	–	46,18	44	71	1,5
	1,5	83,3	–	62,31	–	46	89	1,5

Deep groove ball bearings

Single row

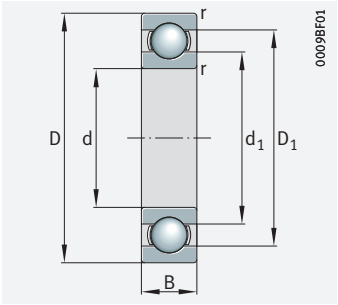

Open

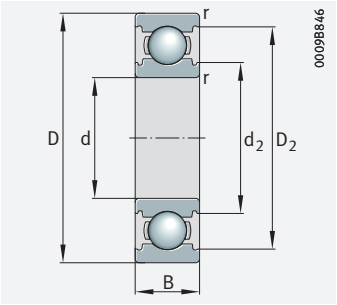

Generation C, open

d = 40 – 40 mm

Main dimensions			Basic load ratings		Fatigue limit load	Limiting speed	Speed rating	Factor	Mass	Designation
d	D	B	dyn. C_r	stat. C_{0r}	C_{ur}	n_G	$n_{\vartheta r}$	f_0	m	➤*229*|*1.12* ➤*230*|*1.13*
			N	N	N	min^{-1}	min^{-1}		≈ kg	
40	52	7	4 930	4 180	196	19 300	8 600	16,2	0,035	**61808**
	52	7	4 930	4 180	196	6 200	–	16,2	0,035	**61808-2RSR**
	52	7	4 930	4 180	196	16 400	8 600	16,2	–	**61808-2Z**
	62	12	14 500	9 900	590	15 800	10 000	15,5	0,115	**61908**
	62	12	14 500	9 900	590	5 700	–	15,5	0,11	**61908-2RSR**
	68	15	17 800	11 500	600	14 600	10 600	15,2	0,192	**6008**
	68	9	12 620	9 650	570	15 200	7 800	16	0,127	**16008**
	68	15	17 800	11 500	600	5 400	–	15,2	0,202	**6008-2RSR**
	68	15	17 800	11 500	600	12 400	10 600	15,2	0,2	**6008-2Z**
	80	18	31 500	17 800	1 230	13 600	10 500	14	0,347	**6208-C**
	80	18	31 500	17 800	1 230	7 800	–	14	0,365	**6208-C-2HRS**
	80	18	31 500	17 800	1 230	11 600	10 500	14	0,362	**6208-C-2Z**
	80	23	29 110	17 900	1 230	5 000	–	14	0,46	**62208-2RSR**
	90	33	40 720	23 940	1 780	4 750	–	12	0,864	**62308-2RSR**
	90	23	47 000	25 000	1 740	11 800	9 900	13	0,596	**6308-C**
	90	23	47 000	25 000	1 740	7 400	–	13	0,654	**6308-C-2HRS**
	90	23	47 000	25 000	1 740	10 100	9 900	13	0,665	**6308-C-2Z**
	110	27	68 000	38 000	2 650	9 500	7 700	13,1	1,22	**6408-C**

medias *https://www.schaeffler.de/std/1F9A*

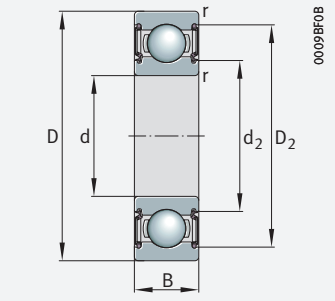

With seal 2BRS, 2HRS, 2RSR, 2Z

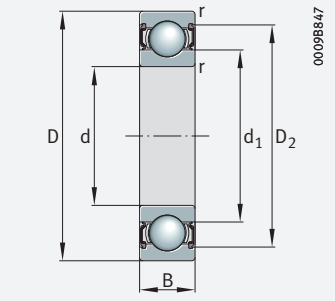

With seal 2RSR, 2Z

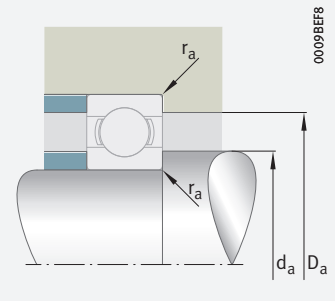

Mounting dimensions

Dimensions						Mounting dimensions		
d	r min.	D_1 ≈	D_2 ≈	d_1 ≈	d_2	d_a min.	D_a max.	r_a max.
40	0,3	48,1	–	43,2	–	42	50	0,3
	0,3	–	48,9	43,2	–	42	50	0,3
	0,3	–	48,9	43,2	–	42	50	0,3
	0,6	55,1	–	46,9	–	43,2	58,8	0,6
	0,6	–	57,3	46,9	–	43,2	58,8	0,6
	1	59,06	–	49,3	–	44,6	63,4	1
	0,3	58,4	–	49,7	–	42	66	0,3
	1	–	61,56	49,3	–	44,6	63,4	1
	1	–	61,56	49,3	–	44,6	63,4	1
	1,1	–	70,57	–	49,3	47	73	1
	1,1	–	70,57	–	49,3	47	73	1
	1,1	–	70,57	–	49,3	47	73	1
	1,1	–	70,4	53	–	47	73	1
	1,5	–	76,4	56,05	–	49	81	1,5
	1,5	–	78,61	–	52,28	49	81	1,5
	1,5	–	78,61	–	52,28	49	81	1,5
	1,5	–	78,61	–	52,28	49	81	1,5
	2	–	95,22	–	66,74	53	97	2

Deep groove ball bearings

Single row

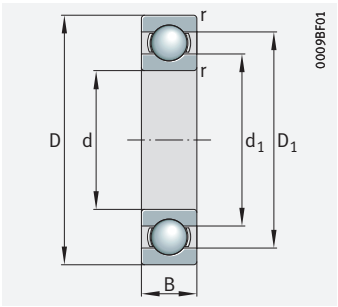

Open

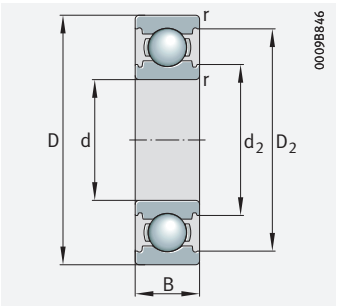

Generation C, open

d = 45 – 45 mm

Main dimensions			Basic load ratings		Fatigue limit load	Limiting speed	Speed rating	Factor	Mass	Designation
d	D	B	dyn. C_r	stat. C_{0r}	C_{ur}	n_G	$n_{\vartheta r}$	f_0	m	➤*229*|*1.12* ➤*230*|*1.13*
			N	N	N	min^{-1}	min^{-1}		≈ kg	
45	58	7	7 000	5 900	400	5 400	–	16,3	0,039	**61809-2RSR-Y**
	58	7	7 000	5 900	400	14 300	7 300	16,3	0,039	**61809-2RZ-Y**
	58	7	7 000	5 900	400	21 900	7 300	16,3	0,039	**61809-Y**
	68	12	15 000	10 900	650	14 400	8 800	16	0,12	**61909**
	68	12	15 000	10 900	650	5 100	–	16	0,13	**61909-2RSR**
	68	12	15 000	10 900	650	12 200	8 800	16	0,13	**61909-2RZ**
	75	16	21 200	14 400	750	13 100	9 700	15,3	0,235	**6009**
	75	10	15 540	12 250	720	13 100	6 900	16	0,162	**16009**
	75	16	21 200	14 400	750	4 950	–	15,3	0,257	**6009-2RSR**
	75	16	21 200	14 400	750	11 200	9 700	15,3	0,253	**6009-2Z**
	85	19	33 500	20 300	1 390	12 700	9 900	14,3	0,396	**6209-C**
	85	19	33 500	20 300	1 390	7 100	–	14,3	0,419	**6209-C-2HRS**
	85	19	33 500	20 300	1 390	10 800	9 900	14,3	0,419	**6209-C-2Z**
	85	23	32 710	20 460	1 410	4 650	–	14,1	0,489	**62209-2RSR**
	100	36	56 000	31 500	2 240	4 300	–	12,9	1,2	**62309-2RSR**
	100	25	58 000	31 500	2 200	10 500	9 100	12,9	0,83	**6309-C**
	100	25	58 000	31 500	2 200	6 400	–	12,9	0,85	**6309-C-2HRS**
	100	25	58 000	31 500	2 200	8 900	9 100	12,9	0,846	**6309-C-2Z**
	120	29	83 000	47 500	3 300	8 500	7 100	12,9	1,52	**6409-C**

medias *https://www.schaeffler.de/std/1F9A*

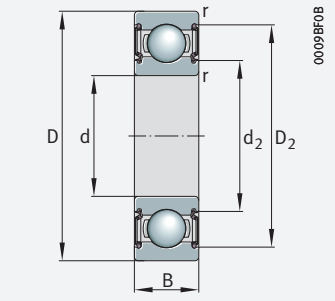

With seal 2BRS, 2HRS, 2RSR, 2Z

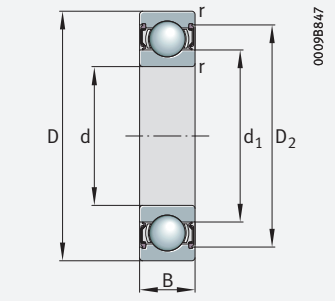

With seal 2RSR, 2RZ, 2Z

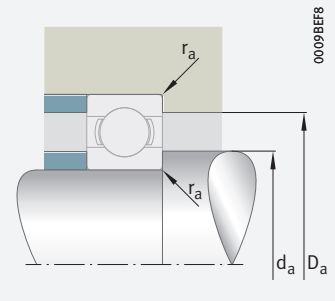

Mounting dimensions

Dimensions						Mounting dimensions		
d	r min.	D_1 ≈	D_2 ≈	d_1 ≈	d_2	d_a min.	D_a max.	r_a max.
45	0,3	–	55,22	49,1	–	47	56	0,3
	0,3	–	55,22	49,1	–	47	56	0,3
	0,3	53,9	–	49,1	–	47	56	0,3
	0,6	60,6	–	52,4	–	48,2	64,8	0,6
	0,6	–	62,8	52,4	–	48,2	64,8	0,6
	0,6	–	62,8	52,4	–	48,2	64,8	0,6
	1	65,6	–	54,2	–	49,6	70,4	1
	0,6	67	–	57	–	48,2	71,8	0,6
	1	–	67,98	54,2	–	49,6	70,4	1
	1	–	67,98	54,2	–	49,6	70,4	1
	1,1	–	75,34	–	54,04	52	78	1
	1,1	–	75,34	–	54,04	52	78	1
	1,1	–	75,34	–	54,04	52	78	1
	1,1	–	76,6	57,55	–	52	78	1
	1,5	–	85,64	62	–	54	91	1,5
	1,5	–	86,37	–	60,33	54	91	1,5
	1,5	–	86,37	–	60,33	54	91	1,5
	1,5	–	86,37	–	60,33	54	91	1,5
	2	–	105,3	–	72,54	58	107	2

Deep groove ball bearings

Single row

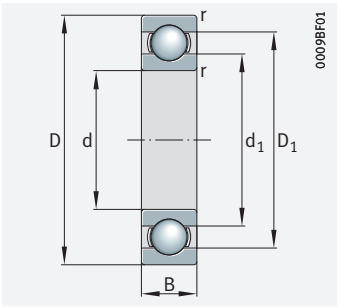

Open

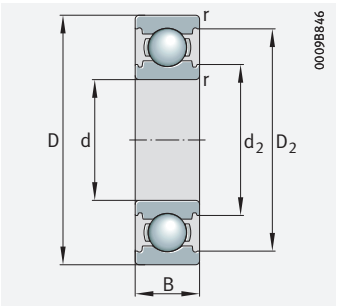

Generation C, open

d = 50 – 50 mm

Main dimensions			Basic load ratings		Fatigue limit load	Limiting speed	Speed rating	Factor	Mass	Designation
d	D	B	dyn. C_r	stat. C_{0r}	C_{ur}	n_G	$n_{\vartheta r}$	f_0	m	➤*229*|*1.12* ➤*230*|*1.13*
			N	N	N	min^{-1}	min^{-1}		≈ kg	
50	65	7	7 200	6 300	440	4 850	–	16	0,052	**61810-2RSR-Y**
	65	7	7 200	6 300	440	12 900	6 400	16	0,052	**61810-2RZ-Y**
	65	7	7 200	6 300	440	19 700	6 400	16	0,052	**61810-Y**
	72	12	15 400	11 700	700	13 400	8 100	16,1	0,083	**61910**
	72	12	15 400	11 700	700	4 700	–	16,1	0,13	**61910-2RSR**
	72	12	15 400	11 700	700	11 400	8 100	16,1	0,13	**61910-2RZ**
	80	10	15 990	13 230	760	12 200	6 300	16,2	0,175	**16010**
	80	16	22 000	15 800	800	12 200	8 900	15,6	0,272	**6010**
	80	16	22 000	15 800	800	10 400	8 900	15,6	0,282	**6010-2Z**
	80	16	22 000	15 800	800	4 450	–	15,6	0,283	**6010-2RSR**
	90	20	38 000	23 200	1 580	11 700	9 200	14,4	0,432	**6210-C**
	90	20	38 000	23 200	1 580	6 500	–	14,4	0,458	**6210-C-2HRS**
	90	20	38 000	23 200	1 580	9 900	9 200	14,4	0,458	**6210-C-2Z**
	90	23	35 070	23 180	1 610	4 250	–	14,4	0,53	**62210-2RSR**
	110	40	66 000	38 000	2 700	3 950	–	13,1	1,55	**62310-2RSR**
	110	27	68 000	38 000	2 650	9 500	8 400	13,1	1,1	**6310-C**
	110	27	68 000	38 000	2 650	5 800	–	13,1	1,12	**6310-C-2HRS**
	110	27	68 000	38 000	2 650	8 000	8 400	13,1	1,1	**6310-C-2Z**
	130	31	89 000	52 000	3 600	7 900	6 800	13,2	1,91	**6410-C**

medias *https://www.schaeffler.de/std/1F9A*

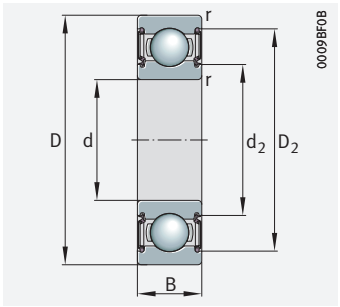

With seal 2BRS, 2HRS, 2RSR, 2Z

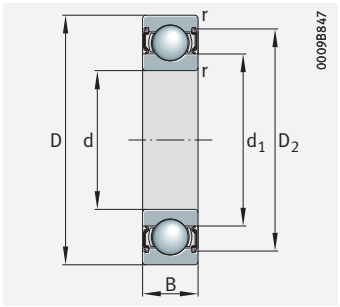

With seal 2RSR, 2RZ, 2Z

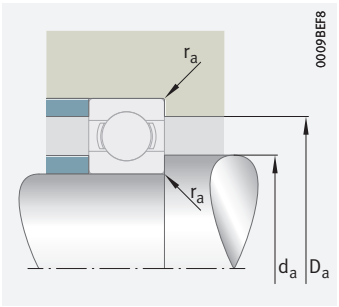

Mounting dimensions

Dimensions						Mounting dimensions		
d	r	D_1	D_2	d_1	d_2	d_a	D_a	r_a
	min.	≈	≈	≈		min.	max.	max.
50	0,3	–	61,84	55,1	–	52	63	0,3
	0,3	–	61,84	55,1	–	52	63	0,3
	0,3	59,9	–	55,1	–	52	63	0,3
	0,6	65,1	–	56,9	–	53,2	68,8	0,6
	0,6	–	67,3	56,9	–	53,2	68,8	0,6
	0,6	–	67,3	56,9	–	53,2	68,8	0,6
	0,6	72,1	–	61,9	–	53,2	76,8	0,6
	1	70,2	–	59,75	–	54,6	75,4	1
	1	–	72,94	59,75	–	54,6	75,4	1
	1	–	72,94	59,75	–	54,6	75,4	1
	1,1	–	81,65	–	59,23	57	83	1
	1,1	–	81,65	–	59,23	57	83	1
	1,1	–	81,65	–	59,23	57	83	1
	1,1	–	81,54	62,65	–	57	83	1
	2	–	95,14	68	–	61	99	2
	2	–	95,22	–	66,74	61	99	2
	2	–	95,22	–	66,74	61	99	2
	2	–	95,22	–	66,74	61	99	2
	2,1	–	112,14	–	79,58	64	116	2,1

Deep groove ball bearings

Single row

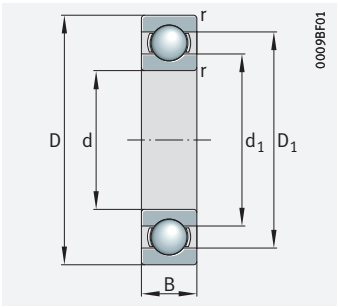

Open

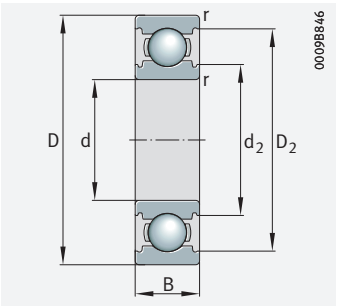

Generation C, open

d = 55 – 55 mm

Main dimensions			Basic load ratings		Fatigue limit load	Limiting speed	Speed rating	Factor	Mass	Designation
d	D	B	dyn. C_r	stat. C_{0r}	C_{ur}	n_G	$n_{\vartheta r}$	f_0	m	➤*229*|*1.12* ➤*230*|*1.13*
			N	N	N	min^{-1}	min^{-1}		≈ kg	
55	90	18	30 000	21 200	1 150	10 700	8 300	15,3	0,397	**6011**
	90	18	30 000	21 200	1 150	4 050	–	15,3	0,397	**6011-2RSR**
	90	18	30 000	21 200	1 150	9 100	8 300	15,3	0,409	**6011-2Z**
	72	9	9 600	8 500	520	4 400	–	16,3	0,084	**61811-2RSR-Y**
	72	9	9 600	8 500	520	11 500	6 600	16,3	0,084	**61811-2RZ-Y**
	72	9	9 600	8 500	520	17 500	6 600	16,3	0,085	**61811-Y**
	80	13	17 700	14 100	780	12 100	7 500	16,3	0,18	**61911**
	80	13	17 700	14 100	780	4 250	–	16,3	0,18	**61911-2RSR**
	80	13	17 700	14 100	780	10 300	7 500	16,3	0,18	**61911-2RZ**
	90	11	19 300	16 300	940	10 900	6 000	16,2	0,26	**16011**
	100	21	46 500	29 000	2 030	10 400	8 300	14,2	0,58	**6211-C**
	100	21	46 500	29 000	2 030	5 800	–	14,2	0,6	**6211-C-2HRS**
	100	21	46 500	29 000	2 030	8 800	8 300	14,2	0,58	**6211-C-2Z**
	100	25	44 500	29 000	1 770	3 900	–	14,2	0,737	**62211-2RSR**
	120	29	83 000	47 500	3 300	8 500	7 800	12,9	1,33	**6311-C**
	120	29	83 000	47 500	3 300	5 300	–	12,9	1,37	**6311-C-2HRS**
	120	29	83 000	47 500	3 300	7 200	7 800	12,9	1,37	**6311-C-2Z**
	140	33	101 000	60 000	4 100	7 300	6 500	13,2	2,32	**6411-C**

medias *https://www.schaeffler.de/std/1F9A*

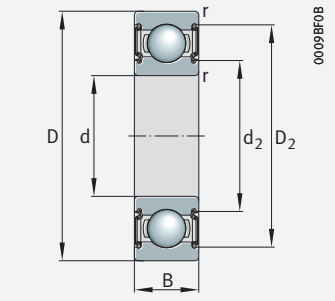

With seal 2BRS, 2HRS, 2RSR, 2Z

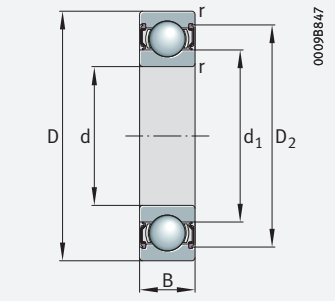

With seal 2RSR, 2RZ, 2Z

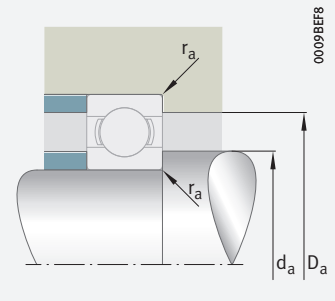

Mounting dimensions

Dimensions						Mounting dimensions		
d	r min.	D_1 ≈	D_2 ≈	d_1 ≈	d_2	d_a min.	D_a max.	r_a max.
55	1,1	78,86	–	66,2	–	61	84	1
	1,1	–	81,54	66,2	–	61	84	1
	1,1	–	81,54	66,2	–	61	84	1
	0,3	–	68,6	60,6	–	57	70	0,3
	0,3	–	68,6	60,6	–	57	70	0,3
	0,3	66,4	–	60,6	–	57	70	0,3
	1	71,8	–	63,2	–	59,6	75,4	1
	1	–	74,2	63,2	–	59,6	75,4	1
	1	–	74,2	63,2	–	59,6	75,4	1
	0,6	78,61	–	69,6	–	58,2	86,8	0,6
	1,5	–	89,72	–	66,69	64	91	1,5
	1,5	–	89,72	–	66,69	64	91	1,5
	1,5	–	89,72	–	66,69	64	91	1,5
	1,5	–	88,2	68,65	–	64	91	1,5
	2	–	105,3	–	72,54	66	109	2
	2	–	105,3	–	72,54	66	109	2
	2	–	105,3	–	72,54	66	109	2
	2,1	–	121,4	–	85,59	69	126	2,1

Deep groove ball bearings

Single row

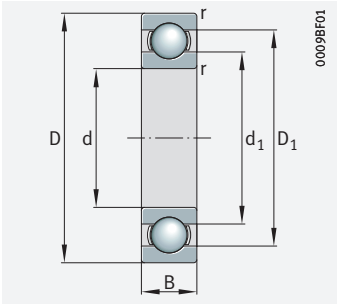

Open

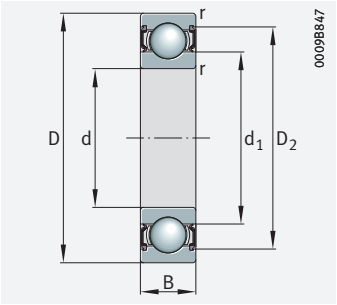

With seal 2RSR, 2RZ, 2Z

d = 60 – 60 mm

Main dimensions			Basic load ratings		Fatigue limit load	Limiting speed	Speed rating	Factor	Mass	Designation
d	D	B	dyn. C_r	stat. C_{0r}	C_{ur}	n_G	$n_{\vartheta r}$	f_0	m	➤*229*|*1.12* ➤*230*|*1.13*
			N	N	N	min^{-1}	min^{-1}		≈ kg	
60	78	10	12 600	11 100	710	4 100	–	16,3	0,105	**61812-2RSR-Y**
	78	10	12 600	11 100	710	10 400	6 300	16,3	0,1	**61812-2RZ-Y**
	78	10	12 600	11 100	710	15 900	6 300	16,3	0,109	**61812-Y**
	85	13	17 400	14 300	790	11 300	6 900	16,5	0,206	**61912**
	85	13	17 400	14 300	790	3 900	–	16,5	0,19	**61912-2RSR**
	95	18	31 500	23 200	1 230	10 100	7 600	15,6	0,419	**6012**
	95	11	21 200	17 500	840	10 500	5 700	16,3	0,283	**16012**
	95	18	31 500	23 200	1 230	3 750	–	15,6	0,432	**6012-2RSR**
	95	18	31 500	23 200	1 230	8 500	7 600	15,6	0,431	**6012-2Z**
	110	22	57 000	36 500	2 550	9 300	6 800	14,5	0,775	**6212**
	110	22	57 000	36 500	2 550	3 550	–	14,5	0,809	**6212-2RSR**
	110	22	57 000	36 500	2 550	7 900	6 800	14,5	0,807	**6212-2Z**
	110	28	56 000	36 000	2 550	3 550	–	14,3	0,998	**62212-2RSR**
	130	31	89 000	52 000	3 600	7 900	7 400	13,2	1,74	**6312-C**
	130	31	89 000	52 000	3 600	4 800	–	13,2	1,75	**6312-C-2HRS**
	130	31	89 000	52 000	3 600	6 700	7 400	13,2	1,74	**6312-C-2Z**
	150	35	115 000	69 000	4 600	6 800	5 900	13,4	2,83	**6412**

medias *https://www.schaeffler.de/std/1F9A*

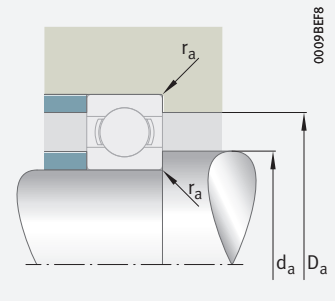

Mounting dimensions

Dimensions						Mounting dimensions		
d	r min.	D_1 ≈	D_2 ≈	d_1 ≈	d_2	d_a min.	D_a max.	r_a max.
60	0,3	–	74,58	65,6	–	62	76	0,3
	0,3	–	74,58	65,6	–	62	76	0,3
	0,3	72,55	–	65,7	–	62	76	0,3
	1	76,8	–	68,2	–	64,6	80,4	1
	1	–	79,2	68,2	–	64,6	80,4	1
	1,1	83,88	–	71,325	–	66	89	1
	0,6	82,98	–	72,12	–	63,2	91,8	0,6
	1,1	–	85,98	71,325	–	66	89	1
	1,1	–	85,98	71,325	–	66	89	1
	1,5	95,82	–	75,75	–	69	101	1,5
	1,5	–	97,68	75,75	–	69	101	1,5
	1,5	–	97,68	75,75	–	69	101	1,5
	1,5	–	97,68	75,75	–	69	101	1,5
	2,1	–	112,14	–	79,58	72	118	2,1
	2,1	–	112,14	–	79,58	72	118	2,1
	2,1	–	112,14	–	79,58	72	118	2,1
	2,1	126,34	–	95,08	–	74	136	2,1

Deep groove ball bearings

Single row

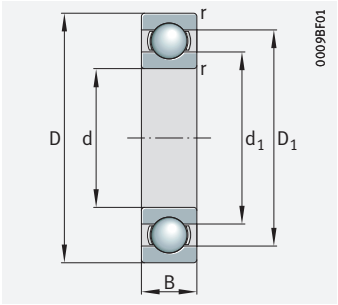

Open

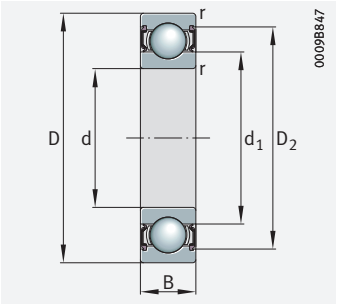

With seal 2RSR, 2RZ, 2Z

d = 65 – 65 mm

Main dimensions			Basic load ratings		Fatigue limit load	Limiting speed	Speed rating	Factor	Mass	Designation
d	D	B	dyn. C_r	stat. C_{0r}	C_{ur}	n_G	$n_{\vartheta r}$	f_0	m	➤*229*|*1.12* ➤*230*|*1.13*
			N	N	N	min^{-1}	min^{-1}		≈ kg	
65	85	10	13 000	12 000	780	3 750	–	16,2	0,13	**61813-2RSR-Y**
	85	10	13 000	12 000	780	9 600	5 700	16,2	0,13	**61813-2RZ-Y**
	85	10	13 000	12 000	780	14 700	5 700	16,2	0,136	**61813-Y**
	90	13	18 500	16 100	890	10 600	6 400	16,6	0,212	**61913**
	90	13	18 500	16 100	890	3 650	–	16,6	0,21	**61913-2RSR**
	90	13	18 500	16 100	890	9 000	6 400	16,6	0,212	**61913-2RZ**
	100	18	32 500	25 000	1 300	9 500	7 100	15,7	0,438	**6013**
	100	11	22 500	19 700	940	9 900	5 300	16,5	0,302	**16013**
	100	18	32 500	25 000	1 300	3 500	–	15,7	0,45	**6013-2RSR**
	100	18	32 500	25 000	1 300	8 100	7 100	15,7	0,45	**6013-2Z**
	120	23	63 000	41 500	2 850	8 600	6 300	14,4	1	**6213**
	120	23	63 000	41 500	2 850	3 250	–	14,4	1,03	**6213-2RSR**
	120	23	63 000	41 500	2 850	7 300	6 300	14,4	1,03	**6213-2Z**
	140	33	101 000	60 000	4 100	7 300	7 000	13,2	2,07	**6313-C**
	140	33	101 000	60 000	4 100	4 500	–	13,2	2,13	**6313-C-2HRS**
	140	33	101 000	60 000	4 100	6 200	7 000	13,2	2,12	**6313-C-2Z**
	160	37	123 000	77 000	4 850	6 300	5 600	13,2	3,49	**6413**

medias *https://www.schaeffler.de/std/1F9A*

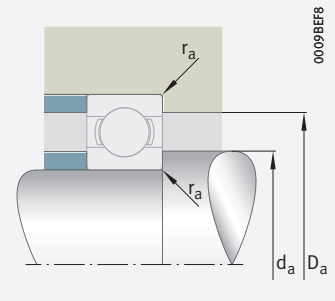

Mounting dimensions

Dimensions						Mounting dimensions		
d	r min.	D_1 ≈	D_2 ≈	d_1 ≈	d_2	d_a min.	D_a max.	r_a max.
65	0,6	–	80,5	71,6	–	68,2	81,8	0,6
	0,6	–	80,5	71,6	–	68,2	81,8	0,6
	0,6	78,4	–	71,6	–	68,2	81,8	0,6
	1	81,8	–	73,2	–	69,6	85,4	1
	1	–	84,2	73,2	–	69,6	85,4	1
	1	–	84,2	73,2	–	69,6	85,4	1
	1,1	88,8	–	76,225	–	71	94	1
	0,6	88	–	77,1	–	68,2	96,8	0,6
	1,1	–	91,52	76,225	–	71	94	1
	1,1	–	91,52	76,225	–	71	94	1
	1,5	103,16	–	82,32	–	74	111	1,5
	1,5	–	106,34	82	–	74	111	1,5
	1,5	–	106,34	82	–	74	111	1,5
	2,1	–	121,4	–	85,59	77	128	2,1
	2,1	–	121,4	–	85,59	77	128	2,1
	2,1	–	121,4	–	85,59	77	128	2,1
	2,1	133,34	–	101,72	–	79	146	2,1

Deep groove ball bearings

Single row

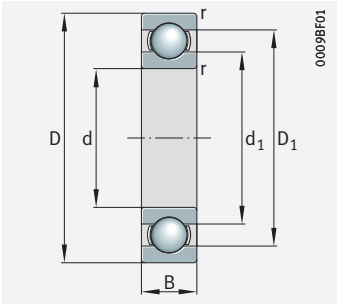

Open

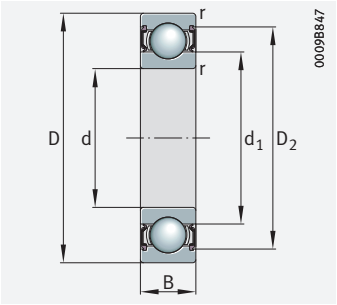

With seal 2RSR, 2RZ, 2Z

d = 70 – 75 mm

Main dimensions			Basic load ratings		Fatigue limit load	Limiting speed	Speed rating	Factor	Mass	Designation
d	D	B	dyn. C_r	stat. C_{0r}	C_{ur}	n_G	$n_{\vartheta r}$	f_0	m	➤*229*|*1.12* ➤*230*|*1.13*
			N	N	N	min^{-1}	min^{-1}		≈ kg	
70	90	10	13 200	12 400	820	3 500	–	16,1	0,14	**61814-2RSR-Y**
	90	10	13 200	12 400	820	9 000	5 300	16,1	0,14	**61814-2RZ-Y**
	90	10	13 200	12 400	820	13 800	5 300	16,1	0,138	**61814-Y**
	100	16	25 000	21 200	1 200	9 500	6 400	16,4	0,348	**61914**
	100	16	25 000	21 200	1 200	3 350	–	16,4	0,35	**61914-2RSR**
	100	16	25 000	21 200	1 200	8 100	6 400	16,4	0,34	**61914-2RZ**
	110	20	40 500	31 000	1 900	8 600	6 800	15,6	0,611	**6014**
	110	13	29 500	25 000	1 260	8 900	5 300	16,2	0,438	**16014**
	110	20	40 500	31 000	1 900	3 250	–	15,6	0,64	**6014-2RSR**
	110	20	40 500	31 000	1 900	7 300	6 800	15,6	0,642	**6014-2Z**
	125	24	66 000	44 000	3 000	8 200	6 100	14,4	1,09	**6214**
	125	24	66 000	44 000	3 000	3 100	–	14,4	1,11	**6214-2RSR**
	125	24	66 000	44 000	3 000	7 000	6 100	14,4	1,09	**6214-2Z**
	150	35	115 000	69 000	4 600	6 800	6 100	13,4	2,55	**6314**
	150	35	115 000	69 000	4 600	2 800	–	13,4	2,6	**6314-2RSR**
	150	35	115 000	69 000	4 600	5 700	6 100	13,4	2,6	**6314-2Z**
	180	42	141 000	97 000	6 000	5 000	5 200	13,3	5,04	**6414**
75	95	10	13 700	13 400	890	3 300	–	16,1	0,15	**61815-2RSR-Y**
	95	10	13 700	13 400	890	8 500	4 950	16,1	0,15	**61815-2RZ-Y**
	95	10	13 700	13 400	890	13 000	4 950	16,1	0,151	**61815-Y**
	105	16	26 000	22 600	1 280	9 000	6 000	16,5	0,36	**61915**
	115	20	42 000	33 500	2 020	8 100	6 300	15,8	0,635	**6015**
	115	13	30 500	27 000	1 330	8 400	4 900	16,5	0,463	**16015**
	115	20	42 000	33 500	2 020	3 050	–	15,8	0,66	**6015-2RSR**
	115	20	42 000	33 500	2 020	6 900	6 300	15,8	0,66	**6015-2Z**
	130	25	70 000	49 000	3 300	7 800	5 900	14,6	1,19	**6215**
	130	25	70 000	49 000	3 300	2 900	–	14,6	1,21	**6215-2RSR**
	130	25	70 000	49 000	3 300	6 600	5 900	14,6	1,21	**6215-2Z**
	160	37	123 000	77 000	4 850	6 300	5 800	13,2	3,18	**6315**
	160	37	123 000	77 000	4 850	2 650	–	13,2	3,18	**6315-2RSR**
	160	37	123 000	77 000	4 850	5 400	5 800	13,2	3,23	**6315-2Z**
	190	45	141 000	97 000	6 000	6 600	5 600	13,3	6,94	**6415-M**

medias *https://www.schaeffler.de/std/1F9A*

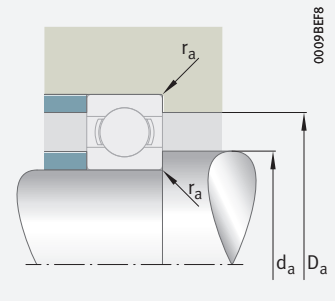

Mounting dimensions

Dimensions					Mounting dimensions		
d	r	D_1	D_2	d_1	d_a	D_a	r_a
	min.	≈	≈	≈	min.	max.	max.
70	0,6	–	85,5	76,6	73,2	86,8	0,6
	0,6	–	85,5	76,6	73,2	86,8	0,6
	0,6	83,4	–	76,6	73,2	86,8	0,6
	1	90,45	–	79,7	74,6	95,4	1
	1	–	93,3	79,7	74,6	95,4	1
	1	–	93,3	79,7	74,6	95,4	1
	1,1	97,28	–	82,75	76	104	1
	0,6	96,24	–	83,7	73,2	106,8	0,6
	1,1	–	100,04	82,75	76	104	1
	1,1	–	100,04	82,75	76	104	1
	1,5	108,21	–	86,75	79	116	1,5
	1,5	–	110,72	86,75	79	116	1,5
	1,5	–	110,72	86,75	79	116	1,5
	2,1	126,34	–	95,08	82	138	2,1
	2,1	–	130,18	94,75	82	138	2,1
	2,1	–	130,18	94,75	82	138	2,1
	3	151,58	–	114,38	86	164	2,5
75	0,6	–	90,5	81,6	78,2	91,8	0,6
	0,6	–	90,5	81,6	78,2	91,8	0,6
	0,6	88,57	–	81,6	78,2	91,8	0,6
	1	95,3	–	84,7	79,6	100,4	1
	1,1	102,58	–	88,05	81	109	1
	0,6	101,22	–	88,7	78,2	111,8	0,6
	1,1	–	105,34	88,05	81	109	1
	1,1	–	105,34	88,05	81	109	1
	1,5	113	–	92,1	84	121	1,5
	1,5	–	115,5	92,1	84	121	1,5
	1,5	–	115,5	92,1	84	121	1,5
	2,1	133,34	–	101,77	87	148	2,1
	2,1	–	137,22	101,4	87	148	2,1
	2,1	–	137,22	101,4	87	148	2,1
	3	151,58	–	114,38	91	174	2,5

Deep groove ball bearings

Single row

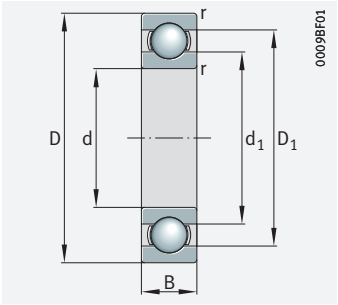

Open

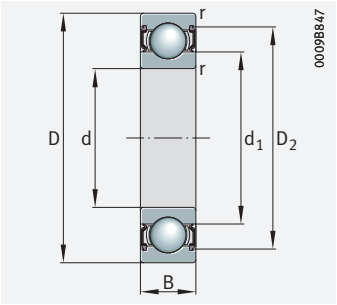

With seal 2RSR, 2RZ, 2Z

d = 80 – 85 mm

Main dimensions			Basic load ratings		Fatigue limit load	Limiting speed	Speed rating	Factor	Mass	Designation
d	D	B	dyn. C_r	stat. C_{0r}	C_{ur}	n_G	$n_{\vartheta r}$	f_0	m	➤*229*|*1.12* ➤*230*|*1.13*
			N	N	N	min^{-1}	min^{-1}		≈ kg	
80	100	10	13 800	13 800	930	3 100	–	16	0,159	**61816-2RSR-Y**
	100	10	13 800	13 800	930	8 000	4 600	16	0,15	**61816-2RZ-Y**
	100	10	13 800	13 800	930	12 300	4 600	16	0,16	**61816-Y**
	110	16	26 500	24 000	1 360	8 500	5 600	16,6	0,394	**61916**
	125	22	51 000	40 000	2 410	7 500	6 100	15,7	0,843	**6016**
	125	14	34 000	31 500	1 560	7 700	4 600	16,6	0,609	**16016**
	125	22	51 000	40 000	2 410	2 850	–	15,7	0,895	**6016-2RSR**
	125	22	51 000	40 000	2 410	6 300	6 100	15,7	0,893	**6016-2Z**
	140	26	77 000	55 000	3 650	7 300	5 500	15	1,46	**6216**
	140	26	77 000	55 000	3 650	2 700	–	15	1,49	**6216-2RSR**
	140	26	77 000	55 000	3 650	6 200	5 500	15	1,48	**6216-2Z**
	170	39	131 000	87 000	5 400	5 400	5 500	13,3	3,76	**6316**
	170	39	131 000	87 000	5 400	2 470	–	13,3	3,82	**6316-2RSR**
	170	39	131 000	87 000	5 400	4 550	5 500	13,3	3,82	**6316-2Z**
	200	48	173 000	125 000	7 100	5 900	5 400	12,3	8,21	**6416-M**
85	110	13	20 400	19 800	1 160	2 850	–	16,2	0,275	**61817-2RSR-Y**
	110	13	20 400	19 800	1 160	7 200	4 900	16,2	0,275	**61817-2RZ-Y**
	110	13	20 400	19 800	1 160	11 100	4 900	16,2	0,28	**61817-Y**
	120	18	34 000	31 500	1 690	7 700	5 400	16,6	0,557	**61917**
	130	22	53 000	43 000	2 500	7 100	5 800	15,7	0,919	**6017**
	130	14	36 000	33 500	1 900	7 400	4 400	16,6	0,637	**16017**
	130	22	53 000	43 000	2 500	2 700	–	15,7	0,92	**6017-2RSR**
	130	22	53 000	43 000	2 500	6 100	5 800	15,7	0,92	**6017-2Z**
	150	28	89 000	64 000	4 050	6 700	5 300	14,8	1,91	**6217**
	150	28	89 000	64 000	4 050	2 500	–	14,8	1,87	**6217-2RSR**
	150	28	89 000	64 000	4 050	5 700	5 300	14,8	1,91	**6217-2Z**
	180	41	141 000	97 000	6 000	5 000	5 300	13,3	4,34	**6317**
	180	41	141 000	97 000	6 000	2 350	–	13,3	4,41	**6317-2RSR**
	180	41	141 000	97 000	6 000	4 300	5 300	13,3	4,39	**6317-2Z**
	210	52	184 000	136 000	7 700	5 600	5 300	12,3	9,52	**6417-M**

medias *https://www.schaeffler.de/std/1F9A*

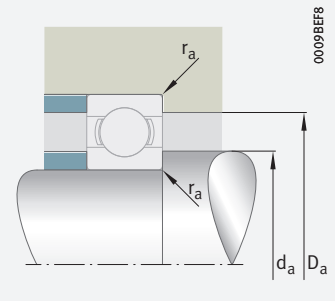

Mounting dimensions

Dimensions					Mounting dimensions		
d	r	D_1	D_2	d_1	d_a	D_a	r_a
	min.	≈	≈	≈	min.	max.	max.
80	0,6	–	95,5	86,6	83,2	96,8	0,6
	0,6	–	95,5	86,6	83,2	96,8	0,6
	0,6	93,57	–	86,6	83,2	96,8	0,6
	1	100,5	–	89,7	84,6	105,4	1
	1,1	110,98	–	94,04	86	119	1
	0,6	110,72	–	96,84	83,2	121,8	0,6
	1,1	–	113,7	93,7	86	119	1
	1,1	–	113,7	93,7	86	119	1
	2	121,48	–	98,84	91	129	2
	2	–	124,38	98,5	91	129	2
	2	–	124,38	98,5	91	129	2
	2,1	141,92	–	108,56	92	158	2,1
	2,1	–	145,48	108,2	92	158	2,1
	2,1	–	145,48	108,2	92	158	2,1
	3	162,14	–	117,94	96	184	2,5
85	1	–	104,2	93,2	89,6	105,4	1
	1	–	104,2	93,2	89,6	105,4	1
	1	101,97	–	93,2	89,6	105,4	1
	1,1	110,02	–	97,14	91	114	1
	1,1	116,04	–	99,54	91	124	1
	0,6	114,7	–	100,9	88,2	126,8	0,6
	1,1	–	119,24	99,2	91	124	1
	1,1	–	119,24	99,2	91	124	1
	2	129,79	–	106,58	96	139	2
	2	–	133,8	106,2	96	139	2
	2	–	133,8	106,2	96	139	2
	3	151,58	–	114,36	99	166	2,5
	3	–	154,9	114	99	166	2,5
	3	–	154,9	114	99	166	2,5
	4	173,14	–	123,36	105	190	3

Deep groove ball bearings

Single row

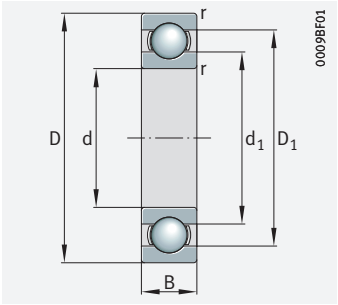

Open

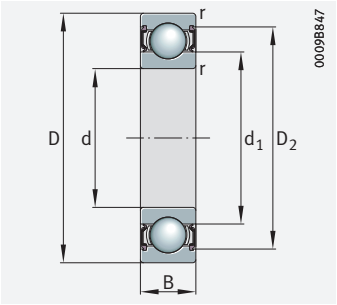

With seal 2RSR, 2RZ, 2Z

d = 90 – 95 mm

Main dimensions			Basic load ratings		Fatigue limit load	Limiting speed	Speed rating	Factor	Mass	Designation
d	D	B	dyn. C_r	stat. C_{0r}	C_{ur}	n_G	$n_{\vartheta r}$	f_0	m	➤*229*|*1.12* ➤*230*|*1.13*
			N	N	N	min^{-1}	min^{-1}		≈ kg	
90	115	13	20 700	20 600	1 200	2 700	–	16,1	0,293	**61818-2RSR-Y**
	115	13	20 700	20 600	1 200	6 900	4 600	16,1	0,31	**61818-2RZ-Y**
	115	13	20 700	20 600	1 200	10 500	4 600	16,1	0,292	**61818-Y**
	125	18	33 500	30 500	1 540	7 400	5 200	15,1	0,583	**61918**
	140	24	62 000	49 500	3 000	6 600	5 600	15,5	1,19	**6018**
	140	16	44 000	39 500	2 080	6 800	4 400	16,4	0,86	**16018**
	140	24	62 000	49 500	3 000	2 500	–	15,5	1,2	**6018-2RSR**
	140	24	62 000	49 500	3 000	5 600	5 600	15,5	1,2	**6018-2Z**
	160	30	102 000	74 000	4 500	6 300	5 100	14,6	2,189	**6218**
	160	30	102 000	74 000	4 500	2 380	–	14,6	2,21	**6218-2RSR**
	160	30	102 000	74 000	4 500	5 400	5 100	14,6	2,216	**6218-2Z**
	190	43	142 000	102 000	5 900	4 900	5 100	13,9	5,34	**6318**
	190	43	142 000	102 000	5 900	2 170	–	13,9	5,396	**6318-2RSR**
	190	43	142 000	102 000	5 900	4 150	5 100	13,9	5,36	**6318-2Z**
	225	54	209 000	162 000	9 100	5 200	4 950	12,1	11,6	**6418-M**
95	120	13	21 000	21 300	1 230	2 600	–	16,1	0,295	**61819-2RSR-Y**
	120	13	21 000	21 300	1 230	6 600	4 350	16,1	0,32	**61819-2RZ-Y**
	120	13	21 000	21 300	1 230	10 000	4 350	16,1	0,31	**61819-Y**
	145	24	64 000	54 000	3 150	6 300	5 300	15,8	1,25	**6019**
	145	16	42 500	41 000	2 050	6 600	4 150	16,6	0,917	**16019**
	145	24	64 000	54 000	3 150	2 420	–	15,8	1,28	**6019-2RSR**
	145	24	64 000	54 000	3 150	5 400	5 300	15,8	1,25	**6019-2Z**
	170	32	116 000	82 000	4 800	5 300	4 950	14,5	2,69	**6219**
	170	32	116 000	82 000	4 800	2 260	–	14,5	2,7	**6219-2RSR**
	170	32	116 000	82 000	4 800	4 550	4 950	14,5	2,7	**6219-2Z**
	200	45	154 000	113 000	6 600	4 600	4 950	13,8	6,07	**6319**
	200	45	154 000	113 000	6 600	2 080	–	13,8	6,19	**6319-2RSR**
	200	45	154 000	113 000	6 600	3 900	4 950	13,8	6,12	**6319-2Z**

medias *https://www.schaeffler.de/std/1F9A*

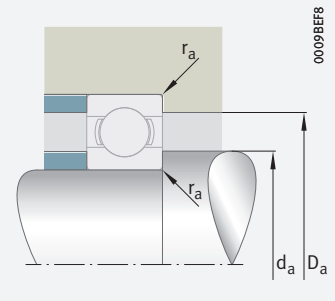

Mounting dimensions

Dimensions					Mounting dimensions		
d	r min.	D_1 ≈	D_2 ≈	d_1 ≈	d_a min.	D_a max.	r_a max.
90	1	–	109,2	98,2	94,6	110,4	1
	1	–	109,2	98,2	94,6	110,4	1
	1	106,97	–	98,2	94,6	110,4	1
	1,1	113,78	–	101,64	96	119	1
	1,5	124,48	–	106,56	97	133	1,5
	1	122,72	–	107,56	94,6	135,4	1
	1,5	–	126,8	106,2	97	133	1,5
	1,5	–	126,8	106,2	97	133	1,5
	2	138,84	–	112,6	101	149	2
	2	–	143,42	112,25	101	149	2
	2	–	143,42	112,25	101	149	2
	3	157,18	–	123,66	104	176	2,5
	3	–	160,74	123,3	104	176	2,5
	3	–	160,74	123,3	104	176	2,5
	4	184,14	–	132,1	110	205	3
95	1	–	114,2	103,2	99,6	115,4	1
	1	–	114,2	103,2	99,6	115,4	1
	1	111,97	–	103,2	99,6	115,4	1
	1,5	129,12	–	110,98	102	138	1,5
	1	128,28	–	113,78	99,6	140,4	1
	1,5	–	131,84	110,6	102	138	1,5
	1,5	–	131,84	110,6	102	138	1,5
	2,1	146,72	–	118,66	107	158	2,1
	2,1	–	150,86	118,3	107	158	2,1
	2,1	–	150,86	118,3	107	158	2,1
	3	166,88	–	129,08	109	186	2,5
	3	–	170,36	128,7	109	186	2,5
	3	–	170,36	128,7	109	186	2,5

Deep groove ball bearings

Single row

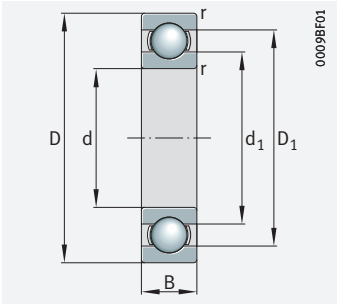

Open

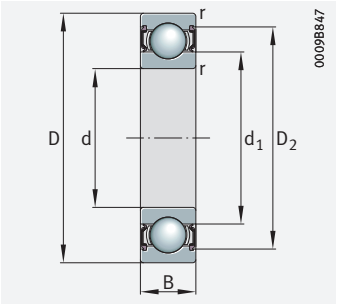

With seal 2RSR, 2RZ, 2Z

d = 100 – 105 mm

Main dimensions			Basic load ratings		Fatigue limit load	Limiting speed	Speed rating	Factor	Mass	Designation
d	D	B	dyn. C_r	stat. C_{0r}	C_{ur}	n_G	$n_{\vartheta r}$	f_0	m	➤*229*|*1.12* ➤*230*|*1.13*
			N	N	N	min^{-1}	min^{-1}		≈ kg	
100	125	13	21 300	22 100	1 250	2 470	–	16	0,34	**61820-2RSR-Y**
	125	13	21 300	22 100	1 250	6 300	4 150	16	0,33	**61820-2RZ-Y**
	125	13	21 300	22 100	1 250	9 600	4 150	16	0,316	**61820-Y**
	150	24	64 000	54 000	3 050	6 100	5 100	15,8	1,29	**6020**
	150	16	46 500	44 500	2 210	6 300	4 000	16,5	0,938	**16020**
	150	24	64 000	54 000	3 050	2 300	–	15,8	1,32	**6020-2RSR**
	150	24	64 000	54 000	3 050	5 200	5 100	15,8	1,29	**6020-2Z**
	180	34	130 000	93 000	5 500	5 000	4 800	14,4	3,27	**6220**
	180	34	130 000	93 000	5 500	2 140	–	14,4	3,34	**6220-2RSR**
	180	34	130 000	93 000	5 500	4 250	4 800	14,4	3,29	**6220-2Z**
	215	47	177 000	137 000	7 400	4 250	4 600	13,7	7,51	**6320**
	215	47	177 000	137 000	7 400	1 940	–	13,7	7,53	**6320-2RSR**
	215	47	177 000	137 000	7 400	3 600	4 600	13,7	7,54	**6320-2Z**
105	130	13	22 100	23 600	1 320	2 360	–	15,9	0,331	**61821-2RSR-Y**
	130	13	22 100	23 600	1 320	6 000	3 900	15,9	0,35	**61821-2RZ-Y**
	130	13	22 100	23 600	1 320	9 200	3 900	15,9	0,33	**61821-Y**
	145	20	46 500	44 500	2 210	6 300	4 600	16,5	0,847	**61921**
	160	26	75 000	64 000	3 550	5 700	4 950	15,7	1,62	**6021**
	160	18	57 000	54 000	2 460	5 900	3 950	16,5	1,23	**16021**
	160	26	75 000	64 000	3 550	2 200	–	15,7	1,6	**6021-2RSR**
	160	26	75 000	64 000	3 550	4 850	4 950	15,7	1,66	**6021-2Z**
	190	36	141 000	105 000	5 800	4 750	4 650	14,4	3,9	**6221**
	190	36	141 000	105 000	5 800	2 030	–	14,4	3,97	**6221-2RSR**
	190	36	141 000	105 000	5 800	4 000	4 650	14,4	3,9	**6221-2Z**
	225	49	188 000	150 000	8 100	4 050	4 450	13,7	8,7	**6321**

medias *https://www.schaeffler.de/std/1F9A*

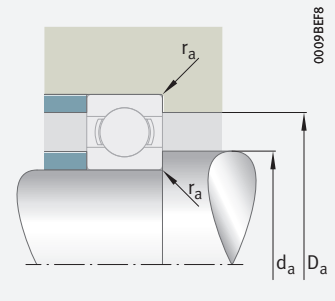

Mounting dimensions

Dimensions					Mounting dimensions		
d	r min.	D_1 ≈	D_2 ≈	d_1 ≈	d_a min.	D_a max.	r_a max.
100	1	–	119,2	108,2	104,6	120,4	1
	1	–	119,2	108,2	104,6	120,4	1
	1	117,07	–	108,2	104,6	120,4	1
	1,5	134,12	–	116,58	107	143	1,5
	1	132,72	–	117,58	104,6	145,4	1
	1,5	–	137,3	116,2	107	143	1,5
	1,5	–	137,3	116,2	107	143	1,5
	2,1	155,45	–	125,08	112	168	2,1
	2,1	–	158,9	124,7	112	168	2,1
	2,1	–	158,9	124,7	112	168	2,1
	3	179,14	–	138,5	114	201	2,5
	3	–	184,58	138,1	114	201	2,5
	3	–	184,58	138,1	114	201	2,5
105	1	–	124,2	113,2	109,6	125,4	1
	1	–	124,2	113,2	109,6	125,4	1
	1	122,11	–	113,2	109,6	125,4	1
	1,1	132,72	–	117,62	111	139	1
	2	142,52	–	122,12	113,8	151,2	2
	1	141,32	–	124,12	109,6	155,4	1
	2	–	145,28	121,7	113,8	151,2	2
	2	–	145,28	121,7	113,8	151,2	2
	2,1	163,28	–	131,9	117	178	2,1
	2,1	–	168,06	131,5	117	178	2,1
	2,1	–	168,06	131,5	117	178	2,1
	3	187,92	–	144,3	119	211	2,5

Deep groove ball bearings

Single row

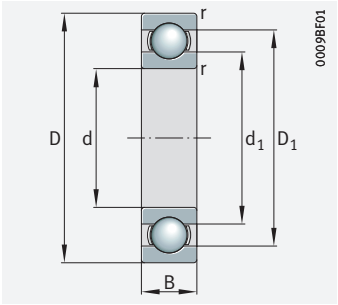

Open

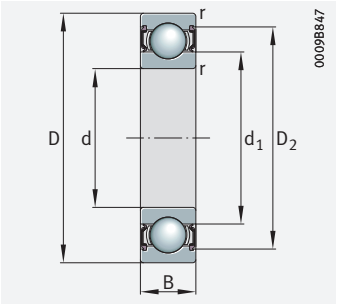

With seal 2RSR, 2RZ, 2Z

d = 110 – 130 mm

Main dimensions			Basic load ratings		Fatigue limit load	Limiting speed	Speed rating	Factor	Mass	Designation
d	D	B	dyn. C_r	stat. C_{0r}	C_{ur}	n_G	$n_{\vartheta r}$	f_0	m	➤*229*|*1.12* ➤*230*|*1.13*
			N	N	N	min^{-1}	min^{-1}		≈ kg	
110	140	16	30 000	30 500	1 650	2 230	–	16	0,54	**61822-2RSR-Y**
	140	16	30 000	30 500	1 650	5 600	4 100	16	0,54	**61822-2RZ-Y**
	140	16	30 000	30 500	1 650	8 500	4 100	16	0,52	**61822-Y**
	170	28	85 000	71 000	3 550	5 300	4 850	15,7	2,03	**6022**
	170	19	61 000	57 000	2 850	5 500	3 850	16,4	1,49	**16022**
	170	28	85 000	71 000	3 550	2 080	–	15,7	2,03	**6022-2RSR**
	170	28	85 000	71 000	3 550	4 550	4 850	15,7	2,03	**6022-2Z**
	200	38	153 000	117 000	6 500	4 450	4 500	14,3	4,58	**6222**
	200	38	153 000	117 000	6 500	3 800	4 500	14,3	4,58	**6222-2Z**
	240	50	201 000	165 000	8 800	3 800	4 150	13,8	10,2	**6322**
	240	50	201 000	165 000	8 800	1 750	–	13,8	10,4	**6322-2RSR**
	240	50	201 000	165 000	8 800	3 250	4 150	13,8	10,2	**6322-2Z**
120	150	16	30 500	33 000	1 730	2 060	–	16	0,52	**61824-2RSR-Y**
	150	16	30 500	33 000	1 730	5 100	3 750	16	0,52	**61824-2RZ-Y**
	150	16	30 500	33 000	1 730	7 900	3 750	16	0,55	**61824-Y**
	180	28	88 000	77 000	3 650	5 000	4 450	15,8	2,18	**6024**
	180	19	65 000	64 000	3 100	5 200	3 550	16,5	1,61	**16024**
	180	28	88 000	77 000	3 650	1 920	–	15,8	2,21	**6024-2RSR**
	180	28	88 000	77 000	3 650	4 250	4 450	15,8	2,17	**6024-2Z**
	215	40	154 000	123 000	6 400	4 200	4 250	14,8	5,58	**6224**
	215	40	154 000	123 000	6 400	1 770	–	14,8	5,72	**6224-2RSR**
	260	55	225 000	195 000	9 800	3 500	3 800	13,8	12,8	**6324**
130	165	18	37 700	43 000	1 840	5 500	3 600	16,2	0,775	**61826**
	180	24	77 000	74 000	3 300	6 400	3 900	16,3	1,88	**61926-M**
	200	33	113 000	101 000	5 000	4 500	4 350	15,8	3,32	**6026**
	200	22	84 000	82 000	3 750	4 650	3 450	16,4	2,37	**16026**
	200	33	113 000	101 000	5 000	1 750	–	15,8	3,38	**6026-2RSR**
	200	33	113 000	101 000	5 000	3 800	4 350	15,8	3,31	**6026-2Z**
	230	40	177 000	146 000	7 700	3 850	3 900	14,5	6,11	**6226**
	230	40	177 000	146 000	7 700	3 250	3 900	14,5	6,12	**6226-2Z**
	280	58	244 000	214 000	10 100	3 200	3 500	13,5	15,4	**6326**

medias *https://www.schaeffler.de/std/1F9A*

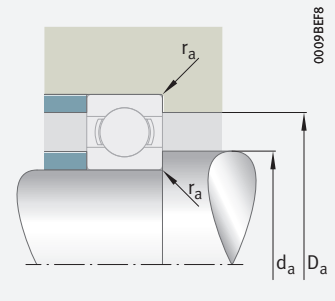

Mounting dimensions

Dimensions					Mounting dimensions		
d	r min.	D_1 ≈	D_2 ≈	d_1 ≈	d_a min.	D_a max.	r_a max.
110	1	–	133,3	119,7	114,6	135,4	1
	1	–	133,3	119,7	114,6	135,4	1
	1	130,61	–	119,7	114,6	135,4	1
	2	151,02	–	129,12	118,8	161,2	2
	1	149,52	–	130,68	114,6	165,4	1
	2	–	154,96	128,7	118,8	161,2	2
	2	–	154,96	128,7	118,8	161,2	2
	2,1	171,68	–	138,42	122	188	2,1
	2,1	–	177,2	138	122	188	2,1
	3	197,54	–	153,26	124	226	2,5
	3	–	203,14	152,85	124	226	2,5
	3	–	203,14	152,85	124	226	2,5
120	1	–	143,3	129,7	124,6	145,4	1
	1	–	143,3	129,7	124,6	145,4	1
	1	140,61	–	129,7	124,6	145,4	1
	2	161,38	–	139,82	128,8	171,2	2
	1	159,48	–	140,72	124,6	175,4	1
	2	–	165,36	139,4	128,8	171,2	2
	2	–	165,36	139,4	128,8	171,2	2
	2,1	185,04	–	151,46	132	203	2,1
	2,1	–	190,5	151,05	132	203	2,1
	3	215,6	–	165,8	134	246	2,5
130	1,1	154,7	–	140	136	159	1
	1,5	164,7	–	145,72	137	173	1,5
	2	177,92	–	153,26	138,8	191,2	2
	1,1	176,74	–	154,72	136	194	1
	2	–	182,08	152,85	138,8	191,2	2
	2	–	182,08	152,85	138,8	191,2	2
	3	198,64	–	161,42	144	216	2,5
	3	–	203,46	161	144	216	2,5
	4	231,25	–	178,88	147	263	3

Deep groove ball bearings

Single row

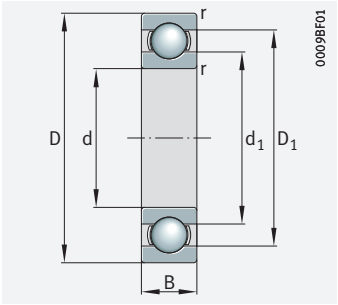

Open

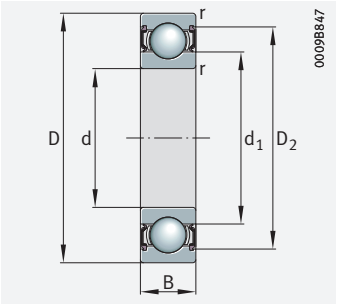

With seal 2RSR, 2RZ, 2Z

d = 140 – 170 mm

Main dimensions			Basic load ratings		Fatigue limit load	Limiting speed	Speed rating	Factor	Mass	Designation
d	D	B	dyn. C_r	stat. C_{0r}	C_{ur}	n_G	$n_{\vartheta r}$	f_0	m	➤*229*|*1.12* ➤*230*|*1.13*
			N	N	N	min^{-1}	min^{-1}		≈ kg	
140	210	33	117 000	109 000	5 100	4 250	4 050	16	3,51	**6028**
	210	22	86 000	87 000	3 850	4 400	3 200	16,5	2,54	**16028**
	210	33	117 000	109 000	5 100	1 650	–	16	3,51	**6028-2RSR**
	210	33	117 000	109 000	5 100	3 600	4 050	16	3,49	**6028-2Z**
	250	42	188 000	165 000	8 400	3 600	3 600	14,9	7,94	**6228**
	300	62	270 000	246 000	11 500	3 850	3 250	13,6	22	**6328-M**
150	190	20	54 000	60 000	2 490	4 700	3 200	16	1,15	**61830**
	225	35	131 000	124 000	5 600	3 950	3 850	16	4,26	**6030**
	225	24	98 000	99 000	4 400	4 050	3 100	16,5	3,17	**16030**
	225	35	131 000	124 000	5 600	1 540	–	16	4,38	**6030-2RSR**
	225	35	131 000	124 000	5 600	3 350	3 850	16	4,3	**6030-2Z**
	270	45	187 000	168 000	8 100	3 350	3 350	15,2	10,2	**6230**
	320	65	300 000	290 000	13 500	3 600	3 000	13,7	26,14	**6330-M**
160	200	20	55 000	62 000	2 500	4 450	3 000	15,9	1,22	**61832**
	220	28	98 000	99 000	4 400	4 050	3 450	16,5	2,7	**61932**
	240	38	142 000	136 000	6 000	3 700	3 750	16	5,2	**6032**
	240	25	109 000	114 000	4 750	3 800	2 950	16,5	3,75	**16032**
	240	38	142 000	136 000	6 000	1 440	–	16	5,27	**6032-2RSR**
	240	38	142 000	136 000	6 000	3 150	3 750	16	5,31	**6032-2Z**
	290	48	212 000	203 000	9 100	4 050	3 100	15,2	14,6	**6232-M**
170	215	22	65 000	73 000	2 900	4 100	2 950	16	1,63	**61834**
	230	28	109 000	114 000	4 750	3 800	3 150	16,5	2,75	**61934**
	260	42	179 000	172 000	7 600	3 400	3 550	15,7	7,1	**6034**
	260	28	131 000	136 000	5 600	3 500	2 850	16,5	5,1	**16034**
	260	42	179 000	172 000	7 600	1 340	–	15,7	7,12	**6034-2RSR**
	310	52	225 000	224 000	9 600	3 800	2 950	15,3	18,2	**6234-M**

medias *https://www.schaeffler.de/std/1F9A*

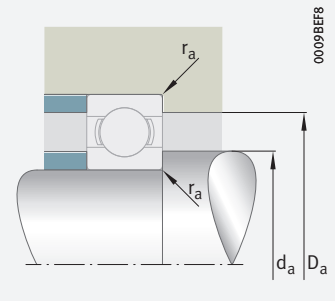

Mounting dimensions

Dimensions					Mounting dimensions		
d	r	D_1	D_2	d_1	d_a	D_a	r_a
	min.	≈	≈	≈	min.	max.	max.
140	2	187,54	–	162,28	148,8	201,2	2
	1,1	186,72	–	164,72	146	204	1
	2	–	191,28	161,85	148,8	201,2	2
	2	–	191,28	161,85	148,8	201,2	2
	3	213,8	–	175,9	154	236	2,5
	4	248,8	–	191,2	157	283	3
150	1,1	177,9	–	162,7	156	184	1
	2,1	201,42	–	174,36	160,2	214,8	2,1
	1,1	199,04	–	175,96	156	219	1
	2,1	–	205,96	173,9	160,2	214,8	2,1
	2,1	–	205,96	173,9	160,2	214,8	2,1
	3	229,15	–	191,6	164	256	2,5
	4	266,2	–	205,5	167	303	3
160	1,1	187,32	–	172,7	166	194	1
	2	199,04	–	176	168,8	211,2	2
	2,1	214,64	–	186,2	170,2	229,8	2,1
	1,5	212,4	–	187,28	167	233	1,5
	2,1	–	219,68	185,75	170,2	229,8	2,1
	2,1	–	219,68	185,75	170,2	229,8	2,1
	3	244,95	–	204,94	174	276	2,5
170	1,1	200,78	–	184,4	176	209	1
	2	212,62	–	187,2	178,8	221,2	2
	2,1	231,4	–	199,4	180,2	249,8	2,1
	1,5	228,6	–	202,28	177	253	1,5
	2,1	–	236,45	198,9	180,2	249,8	2,1
	4	260,85	–	219,04	187	293	3

Deep groove ball bearings

Single row

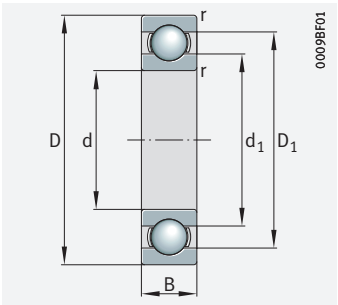

Open

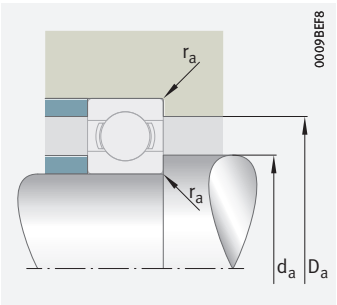

Mounting dimensions

d = 180 – 260 mm

Main dimensions			Basic load ratings		Fatigue limit load	Limiting speed	Speed rating	Factor	Mass	Designation
d	D	B	dyn. C_r	stat. C_{0r}	C_{ur}	n_G	$n_{\vartheta r}$	f_0	m	➤*229*|*1.12* ➤*230*|*1.13*
			N	N	N	min^{-1}	min^{-1}		≈ kg	
180	225	22	66 000	76 000	2 950	3 900	2 750	16,1	1,72	**61836**
	250	33	131 000	136 000	5 600	3 500	3 200	16,5	4,17	**61936**
	280	31	140 000	146 000	5 300	3 350	2 950	16,4	6,86	**16036**
	280	46	201 000	199 000	8 400	4 050	3 300	15,6	10,6	**6036-M**
	320	52	240 000	244 000	10 600	3 650	2 750	15,3	18,8	**6236-M**
190	240	24	73 000	85 000	3 400	3 650	2 700	16	2,22	**61838**
	260	33	140 000	146 000	5 300	3 350	3 000	16,4	4,32	**61938**
	290	31	158 000	168 000	6 400	3 100	2 650	16,5	7,04	**16038**
	290	46	216 000	220 000	9 400	3 850	3 100	15,6	11,3	**6038-M**
200	250	24	74 000	88 000	3 450	3 500	2 550	16	2,28	**61840**
	280	38	158 000	168 000	6 400	3 100	2 950	16,5	6,27	**61940**
	310	34	186 000	202 000	7 500	2 850	2 470	16,4	8,97	**16040**
	310	51	231 000	243 000	9 900	3 650	3 000	15,6	14,4	**6040-M**
220	270	24	78 000	97 000	3 650	3 200	2 320	15,8	2,5	**61844**
	300	38	186 000	202 000	7 100	2 850	2 600	16,4	6,56	**61944**
240	300	28	100 000	124 000	4 500	2 900	2 260	15,9	4,8	**61848**
	320	38	211 000	240 000	8 600	2 600	2 330	16,3	6,78	**61948**
260	320	28	102 000	132 000	4 650	2 700	2 070	15,8	4,15	**61852**

medias *https://www.schaeffler.de/std/1F9A*

Dimensions				Mounting dimensions		
d	r min.	D_1 ≈	d_1 ≈	d_a min.	D_a max.	r_a max.
180	1,1	211,4	194,4	186	219	1
	2	228,8	202,16	188,8	241,2	2
	2	238,95	211,88	188,8	271,2	2
	2,1	249,25	211,8	190,2	269,8	2,1
	4	272,1	228,6	197	303	3
190	1,5	223,78	206,1	197	233	1,5
	2	238,75	211,92	198,8	251,2	2
	2	255,15	225,74	198,8	281,2	2
	2,1	260,25	220,82	200,2	279,8	2,1
200	1,5	233,75	216,74	207	243	1,5
	2,1	255,25	225,7	210,2	269,8	2,1
	2	276,5	244,35	208,8	301,2	2
	2,1	276,25	234,84	210,2	299,8	2,1
220	1,5	255	235,85	227	263	1,5
	2,1	276,45	244,35	230,2	289,8	2,1
240	2	281,6	259,3	248,8	291,2	2
	2,1	298	262,85	250,2	309,8	2,1
260	2	301,7	279,3	268,8	311,2	2

Deep groove ball bearings

Double row

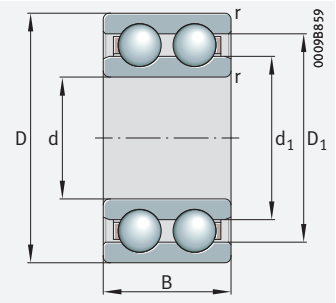

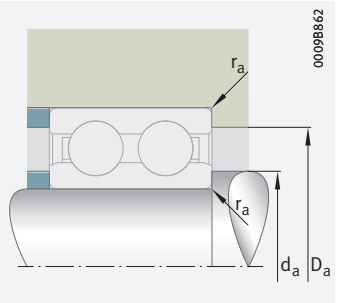

Mounting dimensions

d = 10 – 90 mm

Main dimensions			Basic load ratings		Fatigue limit load	Limiting speed	Speed rating	Factor	Mass	Designation
d	D	B	dyn. C_r	stat. C_{0r}	C_{ur}	n_G	$n_{\vartheta r}$	f_0	m	➤*229*|*1.12* ➤*230*|*1.13*
			N	N	N	min^{-1}	min^{-1}		≈ kg	
10	30	14	8 300	4 750	247	21 800	21 600	13,1	0,051	**4200-BB-TVH**
12	32	14	11 100	6 100	320	19 000	19 100	12,3	0,051	**4201-BB-TVH**
15	35	14	12 400	7 400	385	17 100	16 400	13,1	0,08	**4202-BB-TVH**
	42	17	15 600	9 500	495	14 900	11 600	13	0,125	**4302-BB-TVH**
17	40	16	15 600	9 500	495	14 900	15 100	13	0,1	**4203-BB-TVH**
	47	19	20 900	13 200	690	12 500	9 800	13,1	0,178	**4303-BB-TVH**
20	47	18	20 900	13 200	690	12 500	13 300	13,1	0,14	**4204-BB-TVH**
	52	21	26 000	16 800	870	11 100	9 300	13	0,19	**4304-BB-TVH**
25	52	18	22 900	15 700	820	11 100	11 200	13,8	0,19	**4205-BB-TVH**
	62	24	34 500	22 900	1 190	9 400	8 500	13	0,28	**4305-BB-TVH**
30	62	20	29 000	21 600	1 130	9 400	9 600	14,2	0,28	**4206-BB-TVH**
	72	27	44 000	30 000	1 570	8 000	7 500	13	0,5	**4306-BB-TVH**
35	72	23	39 500	30 000	1 570	7 900	8 700	14,1	0,45	**4207-BB-TVH**
	80	31	58 000	40 500	2 120	6 900	6 900	12,9	0,59	**4307-BB-TVH**
40	80	23	42 000	34 500	1 790	7 200	7 500	14,7	0,45	**4208-BB-TVH**
	90	33	67 000	48 000	2 500	6 100	6 300	13,2	0,83	**4308-BB-TVH**
45	85	23	44 500	38 000	1 990	6 700	6 900	14,9	0,54	**4209-BB-TVH**
	100	36	75 000	60 000	3 700	5 400	5 300	13,9	1,23	**4309-B-TVH**
50	90	23	46 500	42 000	2 200	6 300	6 300	15,2	0,68	**4210-BB-TVH**
	110	40	92 000	76 000	4 600	4 800	5 000	13,8	1,62	**4310-B-TVH**
55	100	25	43 000	42 500	2 200	5 700	5 900	15,4	0,808	**4211-B-TVH**
	120	43	111 000	90 000	5 600	4 350	4 650	13,8	2,06	**4311-B-TVH**
60	110	28	56 000	56 000	2 900	5 000	5 400	15	1,09	**4212-B-TVH**
	130	46	128 000	106 000	6 400	3 950	4 350	13,8	2,58	**4312-B-TVH**
65	120	31	67 000	67 000	3 450	4 650	5 400	15,3	1,44	**4213-B-TVH**
	140	48	137 000	114 000	7 000	3 850	4 500	13,8	3,49	**4313-B-TVH**
70	125	31	70 000	71 000	3 700	4 300	4 800	15	1,5	**4214-B-TVH**
	150	51	156 000	131 000	7 900	3 550	4 200	13,7	3,99	**4314-B-TVH**
75	130	31	72 000	76 000	3 850	4 100	4 450	14,9	1,58	**4215-B-TVH**
80	140	33	81 000	90 000	4 500	3 800	4 200	15,7	1,98	**4216-B-TVH**
85	150	36	94 000	106 000	5 100	3 500	4 100	15,8	2,5	**4217-B-TVH**
90	160	40	113 000	123 000	6 100	3 300	4 100	15,5	3,15	**4218-B-TVH**

medias *https://www.schaeffler.de/std/1F9A*

Dimensions				Mounting dimensions		
d	r min.	D_1 ≈	d_1 ≈	d_a min.	D_a max.	r_a max.
10	0,6	23	16,6	14,2	25,8	0,6
12	0,6	25,8	17,8	16,2	27,8	0,6
15	0,6	28,8	21,4	19,2	30,8	0,6
	0,6	32,9	23,8	20,6	36,4	0,6
17	0,6	32,9	23,8	21,2	35,8	0,6
	1	38,5	28,4	22,6	41,4	1
20	1	38,5	28,4	25,6	41,4	1
	1,1	42,3	31,5	27	45	1
25	1	43,6	33,6	30,6	46,4	1
	1,1	49,9	37	32	55	1
30	1	51,8	39,9	35,6	56,4	1
	1,1	59,4	42,6	37	65	1
35	1,1	60,4	46,3	42	65	1
	1,5	68	48,2	44	71	1,5
40	1,1	67,2	53	47	73	1
	1,5	75,6	54,5	49	81	1,5
45	1,1	72,2	58,1	52	78	1
	1,5	86,8	66,7	54	91	1,5
50	1,1	76,9	62,8	57	83	1
	2	96,2	73,6	61	99	2
55	1,5	84,7	71,4	64	91	1,5
	2	105,3	80,4	66	109	2
60	1,5	95,3	79,8	69	101	1,5
	2,1	113,8	87,7	72	118	2,1
65	1,5	101,9	84,2	74	111	1,5
	2,1	116,2	89,2	77	128	2,1
70	1,5	109,4	91,7	79	116	1,5
	2,1	127,1	97,3	82	138	2,1
75	1,5	115	97,6	84	121	1,5
80	2	124	105,2	91	129	2
85	2	132,8	112,7	96	139	2
90	2	140,2	117,6	101	149	2

Angular contact ball bearings



Matrix for bearing preselection 284

1 Single row angular contact ball bearings 286

1.1 Bearing design 286
1.2 Load carrying capacity 290
1.3 Compensation of angular misalignments 291
1.4 Lubrication 291
1.5 Sealing 292
1.6 Speeds 292
1.7 Noise 293
1.8 Temperature range 294
1.9 Cages 294
1.10 Internal clearance 295
1.11 Dimensions, tolerances 296

FAG

1.12 Suffixes 297
1.13 Structure of bearing designation 297
1.14 Dimensioning 298
1.15 Minimum load 302
1.16 Design of bearing arrangements 302
1.17 Mounting and dismounting 306
1.18 Legal notice regarding data freshness 306
1.19 Further information 306
Product table 308
Angular contact ball bearings, single row 308

2 Double row angular contact ball bearings 318

2.1 Bearing design 318
2.2 Load carrying capacity 321
2.3 Compensation of angular misalignments 321
2.4 Lubrication 321
2.5 Sealing 321
2.6 Speeds 322
2.7 Noise 322
2.8 Temperature range 323
2.9 Cages 324
2.10 Internal clearance 324
2.11 Dimensions, tolerances 325
2.12 Suffixes 326
2.13 Structure of bearing designation 327
2.14 Dimensioning 327
2.15 Minimum load 329
2.16 Design of bearing arrangements 329
2.17 Mounting and dismounting 331
2.18 Legal notice regarding data freshness 332
2.19 Further information 332
Product table 334
Angular contact ball bearings, double row 334

Matrix for bearing preselection

The matrix gives an overview of the types and design features.

It can be used to make a preliminary assessment of whether a bearing is fundamentally suitable for the envisaged application.

The additional information provided in the product chapter (see column "detailed information") and in the Technical principles must, however, be observed in addition to this overview in selection of the bearing.

Design features and suitability			Single row angular contact ball bearings	
+++ extremely suitable ++ highly suitable + suitable (+) suitable with restrictions – not suitable ✓ available			single row	detailed information ➤ 286
Load carrying capacity	radial		++	➤ 290|1.2
	axial, one direction		++	➤ 290|1.2
	axial, both directions		++[1]	➤ 290|1.2
	moments		++[1]	➤ 290|1.2
Compensation of angular misalignments	static		–	➤ 291|1.3
	dynamic		–	➤ 291|1.3
Bearing design	cylindrical bore		✓	➤ 286|1.1
	tapered bore		–	
	separable		–	➤ 306|1.17
Lubrication	greased		✓[3]	➤ 291|1.4 ➤ 70
Sealing	open		✓	➤ 292|1.5 ➤ 185
	non-contact		✓	➤ 292|1.5
	contact		✓	➤ 292|1.5
Operating temperature in °C	from to		–30 +150[4]	➤ 294|1.8
Suitability for	high speeds		+++	➤ 292|1.6
	high running accuracy		+	➤ 115
	low-noise running		++	➤ 293|1.7 ➤ 286
	high rigidity		++	➤ 54
	reduced friction		++	➤ 56
	length compensation within bearing		–	
	non-locating bearing arrangement		+[1]	➤ 141
	locating bearing arrangement		+++[1]	➤ 141
X-life design		X-life	✓	➤ 289
Bearing bore d in mm	from to		10 180[5]	➤ 308
Product tables	from page ➤		308	

1) For mounting in pairs only, O or X arrangement
2) Valid for bearings with split inner ring
3) Valid for bearings sealed on both sides
4) Valid for open, ungreased bearings with sheet steel or brass cage
5) Larger catalogue bearings GL 1

	Double row angular contact ball bearings	
	double row	detailed information
		➤ **318**
	++	➤ *321|2.2*
	++	➤ *321|2.2*
	++	➤ *321|2.2*
	+	➤ *321|2.2*
	–	➤ *321|2.3*
	–	➤ *321|2.3*
	✓	➤ *318|2.1*
	–	
	✓[2]	➤ *331|2.17*
	✓[3]	➤ *321|2.4* ➤ *70*
	✓	➤ *321|2.5* ➤ *185*
	✓	➤ *321|2.5*
	✓	➤ *321|2.5*
	–30 +150[4]	➤ *323|2.8*
	+	➤ *322|2.6*
	++	➤ *115*
	++	➤ *322|2.7* ➤ *319*
	++	➤ *54*
	++	➤ *56*
	–	
	+	➤ *141*
	++	➤ *141*
	✓	➤ *320*
	5 110[5]	➤ *334*
	334	

1 Single row angular contact ball bearings

Single row angular contact ball bearings are particularly suitable where:

- bearing arrangements must support combined loads, i.e. radial and axial loads acting simultaneously ➤*287*|*2*
- moderate to high axial loads are present on one side
- rigid axial guidance is required
- the bearing arrangement must be axially clearance-free or preloaded
- high speeds are required under higher radial and axial loads
- the bearing arrangement is to run quietly in addition to meeting the requirements stated above

For an overview of other product-specific features, see the Matrix for bearing preselection ➤*284*.

1
Angular contact ball bearings: speed comparison with tapered roller bearings

n_G = *limiting speed*

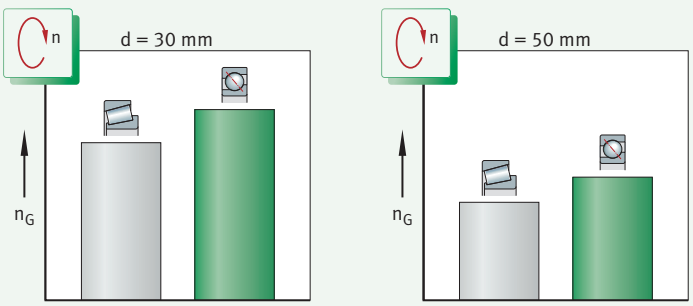

1.1 Bearing design

Design variants

The standard product range comprises bearings of series 718..-B, 70..-B(-2RS), 72..-B(-2RS), 73..-B(-2RS) and 74..-B.
These bearings are also available for various applications as:

- bearings of basic design for bearing arrangements with single bearings ➤*287*|*2*
- universal bearings for installation in sets in a tandem, O or X arrangement ➤*288*|*3*, ➤*288*|*4*, ➤*289*|*5*
- X-life bearings ➤*289*

Single row angular contact ball bearings are also available in other dimension series, designs and sizes. Information on these bearings is available from Schaeffler on request. Larger catalogue bearings GL 1.

Bearings of basic design for bearing arrangements with single bearings

The forces are transmitted oblique to the radial plane

Single row angular contact ball bearings are part of the group of radial ball bearings. These self-retaining units have solid outer and inner rings. The rolling elements are guided by cages made from polyamide, sheet steel, or brass. The bearing rings are designed with one high shoulder and one low shoulder ➤287|2. As a result of the different shoulder heights, the mounting method differs from that of deep groove ball bearings. The possible number of balls for angular contact ball bearings with identical dimensions is higher than for deep groove ball bearings. In contrast to deep groove ball bearings, the raceways on the inner and outer rings are arranged obliquely to each other in the direction of the bearing axis. As a result, the forces are transmitted from one raceway to the other at a defined contact angle (oblique to the radial plane) ➤291|7.

For bearing positions with only one bearing each

These angular contact ball bearings can be considered when only one bearing is used per bearing position. As the bearings have standard bearing ring tolerances (they are manufactured to tolerance class Normal), they are not suitable for mounting directly adjacent to each other.
In such cases, universal bearings should be used.

2
Single row angular contact ball bearing of basic design

F_r = *radial load*
F_a = *axial load*
α = *nominal contact angle*

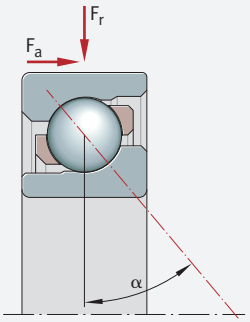

Universal bearings for mounting in sets

Bearings can be mounted in pairs in any arrangement required

Single row angular contact ball bearings, which are intended for mounting in pairs (in sets) directly adjacent to each other, are manufactured in the so-called universal design ➤288|3, ➤288|4, ➤289|5. These bearings can be used in pairs in any arrangement without shims. Depending on the design selected, the mounted bearing pair has the required axial clearance, freedom from clearance or preload. This gives easier design of the bearing arrangement and mounting of the bearings.

When ordering, please state the number of bearings, not the number of bearing pairs.

Suffixes: UA, UB, UO, UL, UM, UH

Bearings of a universal design are indicated by the suffix UA, UB, UO, UL, UM or UH ➤297|6. If bearings of the universal design are arranged in sets, this gives a defined axial clearance or an axial preload:

- UA = bearing set with small axial internal clearance
- UB = bearing set with smaller axial internal clearance than UA
- UO = bearing set clearance-free in O or X arrangement
- UL = bearing set with light preload
- UM = bearing set with moderate preload
- UH = bearing set with high preload

✎ *Reasons for mounting in sets*

Single row angular contact ball bearings are mounted in sets if:

- the load carrying capacity of one bearing is not sufficient (bearing set in a tandem arrangement)
- combined or axial loads occur in both directions and the bearing arrangement must have a defined axial clearance (bearing set in O or X arrangement)

The following arrangements are possible for mounting in sets:

- tandem arrangement ➤ *288* | *3*
- O arrangement ➤ *288* | *4*
- X arrangement ➤ *289* | *5*

Bearing sets in tandem arrangement

✎ *Tandem arrangement*

In a tandem arrangement, the contact lines run parallel to each other ➤ *288* | *3*. Axial forces are distributed equally over both bearings, but can only be supported by the bearing set from one direction. In order to support axial forces from the opposing direction, as well as combined loads, the bearing set is always adjusted against a further bearing.

3
Universal bearings, mounted in set in a tandem arrangement

Bearing set in tandem arrangement

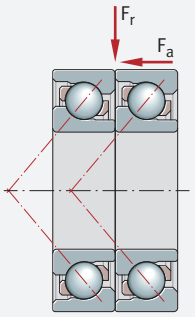

0009A7DC

Bearing sets in O arrangement

✎ *O arrangement*

In an O arrangement, the apexes of the cones formed by the contact lines point outwards, i.e. they diverge relative to the bearing axis ➤ *288* | *4*. Bearing sets in an O arrangement support axial forces from both directions, but only ever with one bearing. Due to the large support spacing (i.e. the spacing between the contact cone apexes), these give relatively rigid bearing arrangements (small tilting clearance) and are also suitable for supporting tilting moments.

4
Universal bearings, mounted in set in an O arrangement

Bearing set in O arrangement

S = *contact cone apex*
H = *support spacing*

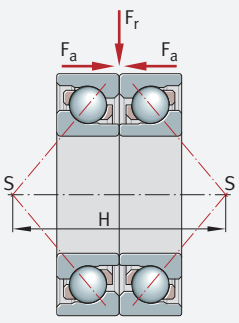

0009A7E0

Bearing sets in X arrangement

✎ *X arrangement*

In an X arrangement, the apexes of the cones formed by the contact lines point inwards, i. e. they converge relative to the bearing axis ➤ *289* | 5. Once again, bearing sets of this type support axial forces from both directions, but also only ever with one bearing. The support base is, however, smaller than in an O arrangement. As a result, the sets are not as rigid as in an O arrangement. Furthermore, they are less suitable for supporting tilting moments.

5
Universal bearings, mounted in set in an X arrangement

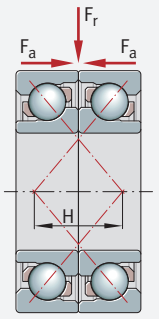

Bearing set in X arrangement

H = *support spacing*

X-life premium quality

X-life

Many sizes in series 70..-B, 72..-B, 73..-B and 74..-B are available as X-life bearings ➤ *308* | ▦. These bearings exhibit considerably higher performance than standard single row angular contact ball bearings ➤ *290* | 6. This is achieved, for example, through the modified internal construction, higher surface quality of the contact surfaces and optimised cage design, as well as through the improved quality of the steel and rolling elements.

Advantages

✎ *Increased customer benefits due to X-life*

The technical enhancements offer a range of advantages, such as:

- a more favourable load distribution in the bearing and thus a higher dynamic load carrying capacity of the bearings ➤ *290* | 6
- quieter running
- running with reduced friction and greater energy efficiency
- lower heat generation in the bearing
- higher possible speeds
- lower lubricant consumption and, consequently, longer maintenance intervals
- a measurably longer operating life of the bearings
- high operational security
- compact, environmentally-friendly bearing arrangements

✎ *Lower operating costs, higher machine availability*

In conclusion, these advantages improve the overall cost-efficiency of the bearing position significantly and thus bring about a sustainable increase in the efficiency of the machine and equipment.

✎ *Suffix XL*

Single row X-life angular contact ball bearings include the suffix XL in the designation ➤*297*| 9, ➤*298*| *10* and ➤*308*|.

6

Comparison of basic dynamic load rating C_r – bearing series 73..-B-XL, bore code 05 to 26, with a bearing which is not of X-life quality (73..-B)

C_r = *basic dynamic load rating*

① *Bore code*

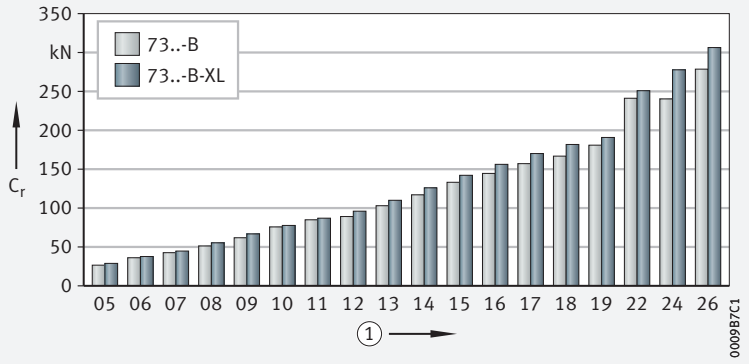

Areas of application

✎ *Wide application range*

Due to their special technical features, single row X-life angular contact ball bearings are highly suitable for bearing arrangements in:

- compressors
- fluid and hydraulic pumps
- automotive chassis and gearboxes
- industrial gearboxes
- electric motors
- industrial ventilators
- machine tools
- textile machinery

X-life indicates a high product performance density and thus a particularly significant benefit to the customer. Further information on X-life ➤*10*.

1.2 Load carrying capacity

✎ *Radial load*

Single row angular contact ball bearings can support high radial forces. Pure radial loads are also possible, if the bearings are adjusted.

✎ *Axial loading is only possible on one side*

Due to the geometry and position of the raceway shoulders, axial loads are only transmitted from one direction ➤*287*| *2*. If these angular contact ball bearings are required to support axial forces from both directions, they are adjusted against a second bearing in a mirror image arrangement ➤*299*| *11* and ➤*300*| *12*.

✎ *The axial load carrying capacity of the bearings increases with the size of the contact angle*

The contact angle α is the angle encompassed by the contact line and the radial plane, under which the load is transmitted from one raceway to the other ➤*291*| *7*. The axial load carrying capacity of the bearing increases with the value of α, i.e. the greater the angle, the higher the axial load to which the bearing can be subjected. As a result, angular contact ball bearings are more suitable than deep groove ball bearings for supporting higher axial forces. Due to the nominal contact angle of $\alpha = 40°$, single row angular contact ball bearings can support high axial loads on one side.

For information on angular contact ball bearings available with contact angles other than $\alpha = 40°$, please consult Schaeffler.

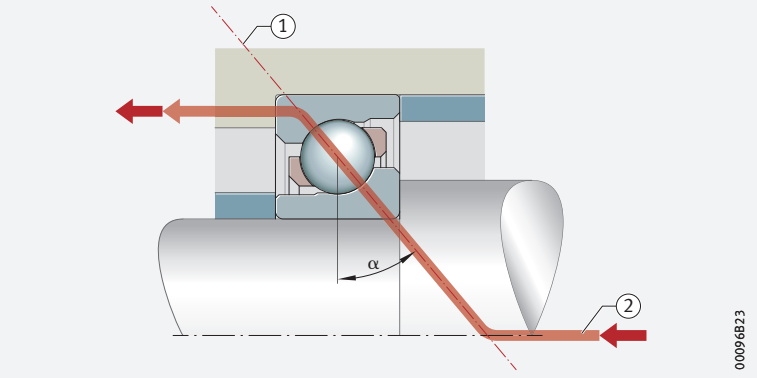

7
Contact angle and force flow

α = *contact angle*

① *Contact line*
② *Force flow*

Load carrying capacity of bearing sets

The basic dynamic and static load ratings C_r and C_{0r} in the product tables always refer to the single bearing. If two bearings of the same size and design are arranged immediately adjacent to each other in an O or X arrangement, the following will apply to the bearing pairs:

- $C_r = 1{,}625 \cdot C_{r\ \text{single bearing}}$
- $C_{0r} = 2 \cdot C_{0r\ \text{single bearing}}$

1.3 Compensation of angular misalignments

The angular adjustment facility of the bearings is very limited

Single row angular contact ball bearings are not suitable for the compensation of angular misalignments. In addition, misalignments induce internal forces in the bearing, which not only lead to higher temperatures, but also to a reduction in the bearing rating life.

Angular contact ball bearings arranged in sets

Misalignments in angular contact ball bearings mounted in sets lead – particularly with a small internal clearance and an O arrangement – to increased loads on the balls and cage, as the angular misalignments are supported under constraint between the balls and raceways. This can, in turn, have a negative effect on the operating life of the bearings. In addition, it should be noted that running noise is increased by a misalignment of the bearing rings.

1.4 Lubrication

Greased bearings are maintenance-free

Angular contact ball bearings sealed on both sides are greased with a high quality grease and do not require relubrication.

Ungreased bearings must be lubricated

Open bearings and bearings with seals on one side are not greased. These bearings must be lubricated with oil or grease.

Compatibility with plastic cages

When using bearings with plastic cages, compatibility between the lubricant and the cage material must be ensured if synthetic oils, lubricating greases with a synthetic oil base or lubricants containing a high proportion of EP additives are used.

Observe oil change intervals

Aged oil and additives in the oil can impair the operating life of plastics at high temperatures. As a result, stipulated oil change intervals must be strictly observed.

1.5 Sealing

Sealing with contact seals 2RS

Bearings with the suffix 2RS have lip seals on both sides ➤*297*|▦*6*. Due to their good sealing action, they are suitable for use in dusty, contaminated or damp environments.

Open bearings

In the case of unsealed bearings, sealing of the bearing position must be carried out by the adjacent construction. The sealing system should reliably prevent:

- moisture and contaminants from entering the bearing
- the egress of lubricant from the bearing

1.6 Speeds

Speeds in the product tables

The product tables generally give two speeds for the bearings:

- the kinematic limiting speed n_G
- the thermal speed rating $n_{\vartheta r}$

Limiting speeds

The limiting speed n_G is the kinematically permissible speed of the bearing. Even under favourable mounting and operating conditions, this value should not be exceeded without prior consultation with Schaeffler ➤*64*.

The values given in the product tables are valid for oil lubrication in the case of bearings without seals or shields and for grease lubrication where bearings are supplied greased and with seals or shields.

Bearings with solid brass cages have a significantly higher limiting speed for oil lubrication.

Values for grease lubrication

For the grease lubrication of bearings without seals or shields, 75% of the value stated in the product tables is permissible in each case.

For the grease lubrication of bearings with solid brass cages, 58% of the value stated in the product tables is permissible in each case.

Reference speeds

$n_{\vartheta r}$ is used to calculate n_ϑ

The thermal speed rating $n_{\vartheta r}$ is not an application-oriented speed limit, but is a calculated ancillary value for determining the thermally safe operating speed n_ϑ ➤*64*.

Bearings with contact seals

For bearings with contact seals, no reference speeds are defined in accordance with DIN ISO 15312:2004. As a result, only the limiting speed n_G is given in the product tables for these bearings.

Bearing sets of universal design

Bearing pairs usually operate at lower speeds than single bearings

Angular contact ball bearings of universal design can be used in an X, O or tandem arrangement ➤*288*|*3* to ➤*289*|*5*. The thermally safe operating speed of the bearing pair is then approximately 20% below the calculated permissible operating speed of the single bearing.

1.7 Noise

The Schaeffler Noise Index (SGI) has been developed as a new feature for comparing the noise level of different bearing types and series. As a result, a noise evaluation of rolling bearings can now be carried out for the first time.

Schaeffler Noise Index

The SGI value is based on the maximum permissible noise level of a bearing in accordance with internal standards, which is calculated on the basis of ISO 15242. In order that different bearing types and series can be compared, the SGI value is plotted against the basic static load rating C_0.

This permits direct comparisons between bearings with the same load carrying capacity. The upper limit value is given in each of the diagrams. This means that the average noise level of the bearings is lower than illustrated in the diagram.

The Schaeffler Noise Index is an additional performance characteristic in the selection of bearings for noise-sensitive applications. The specific suitability of a bearing for an application in terms of installation space, load carrying capacity or speed limit for example, must be checked independently of this.

The Noise Index is currently available for the main series. Additional series will be updated and introduced in subsequent publications.

Further information:

- ***medias*** *https://medias.schaeffler.com*

8
Schaeffler Noise Index for single row angular contact ball bearings

SGI = *Schaeffler Noise Index*
C_0 = *basic static load rating*

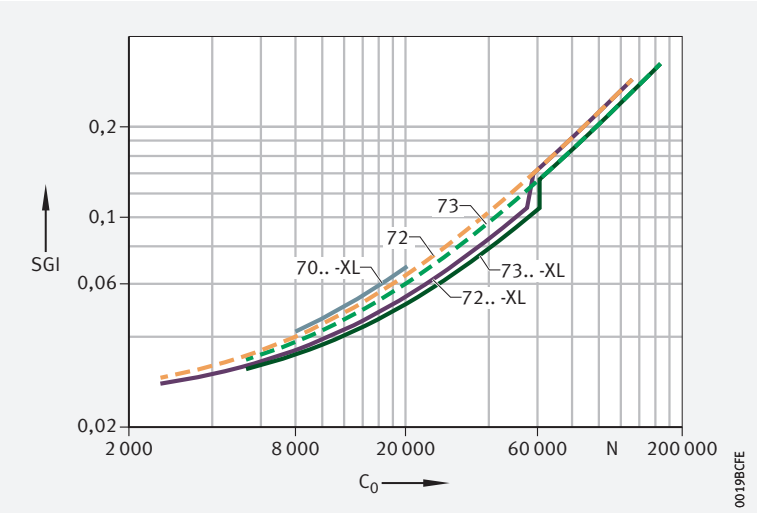

1.8 Temperature range

✎ *Limiting values*

The operating temperature of the bearings is limited by:

- the dimensional stability of the bearing rings and rolling elements
- the cage
- the lubricant
- the seals

Possible operating temperatures of single row angular contact ball bearings ➤ *294* | ▦ *1*.

▦ **1** *Permissible temperature ranges*

Operating temperature	Single row angular contact ball bearings, open		Single row angular contact ball bearings, sealed
	with sheet steel or brass cage	with polyamide cage PA66	
	–30 °C to +150 °C, for D > 240 mm up to +200 °C	–30 °C to +120 °C	–30 °C to +110 °C, limited by the lubricant and seal material

In the event of anticipated temperatures which lie outside the stated values, please contact Schaeffler.

1.9 Cages

✎ *Solid cages made from brass and PA66, as well as sheet steel cages, are used as standard*

Standard cages and additional cage designs for single row angular contact ball bearings are made from brass, polyamide or steel ➤ *294* | ▦ *2*. Other cages are available by agreement. With such cages, however, suitability for high speeds and temperatures as well as the basic load ratings may differ from the values for the bearings with standard cages.

For high continuous temperatures and applications with difficult operating conditions, bearings with brass or sheet steel cages should be used. If there is any uncertainty regarding cage suitability, please consult Schaeffler.

▦ **2** *Cage, cage suffix, bore code*

Bearing series	Solid cage made from polyamide PA66 TVH, TVP		Solid brass cage MP		Sheet steel cage JP
	standard	also available for	standard	also available for	also available for
	Bore code				
718	06 to 16	–	–	–	–
70	04 to 08	–	–	–	–
72	up to 20, 22 to 26	–	21, from 28	00, 03, from 05	up to 20, 22
73	up to 20, 22 to 26	–	21, from 28	from 04	up to 20, 22
74	–	07 to 15	05 to 16	–	07 to 15

1.10 Internal clearance

Axial internal clearance, preload and preload force of bearing sets with universal bearings in O or X arrangement

Valid for bearing sets in O or X arrangement

Values for axial internal clearance, preload and preload force of bearings of universal design ➤*295*|▦*3*. The values for axial internal clearance are valid for unmounted bearing sets in an O or X arrangement, which are free from load and measurement forces (without elastic deformation).

The angular contact ball bearings can also be supplied with a different internal clearance. Please consult Schaeffler in this case.

▦*3*

Axial internal clearance, preload and preload force of bearing sets with universal bearings in O or X arrangement for tolerance classes Normal, 6, 5

UA = *bearing with small axial internal clearance*

UB = *bearing with smaller axial internal clearance than UA*

UO = *bearing clearance-free in O or X arrangement*

UL = *bearing with light preload*

Bore code	Axial internal clearance or preload of bearing pair Nominal dimension µm							Preload force $F_{V\,max}$ N			
	UA	UB	UO	UL				UL			
	Bearing series										
	70..-B, 72..-B, 73..-B, 74..-B			70..-B	72..-B	73..-B	74..-B	70..-B	72..-B	73..-B	74..-B
00	22	14	0	–	−3	–	–	–	38	–	–
01	24	15	0	–	−4	−5	–	–	53	82	–
02	24	15	0	–	−4	−5	–	–	62	99	–
03	24	15	0	–	−4	−6	–	–	77	123	–
04	28	16	0	−4	−5	−6	−8	103	103	146	258
05	34	19	0	−4	−4	−6	−8	115	112	200	300
06	34	19	0	−5	−5	−7	−8	141	157	250	365
07	40	22	0	−5	−6	−7	−9	172	208	300	462
08	40	22	0	−5	−6	−8	−10	200	246	385	535
09	44	24	0	–	−6	−9	−10	–	277	462	600
10	44	24	0	–	−6	−10	−10	–	288	535	692
11	46	25	0	–	−7	−10	−11	–	358	600	785
12	46	25	0	–	−7	−10	−11	–	431	692	877
13	46	25	0	–	−8	−11	−12	–	492	785	977
14	50	27	0	–	−8	−11	−12	–	535	877	1 154
15	50	27	0	–	−8	−12	−13	–	523	977	1 154
16	50	27	0	–	−8	−12	−16	–	615	1 077	1 385
17	54	31	0	–	−8	−13	–	–	692	1 154	–
18	54	31	0	–	−9	−13	–	–	815	1 231	–
19	54	31	0	–	−10	−14	–	–	892	1 331	–
20	54	31	0	–	−11	−14	–	–	992	1 485	–
21	58	34	0	–	−11	−14	–	–	1 100	1 538	–
22	58	34	0	–	−12	−15	–	–	1 177	1 723	–
24	58	34	0	–	−12	−16	–	–	1 277	1 923	–
26	60	34	0	–	−12	−17	–	–	1 431	2 115	–
28	60	34	0	–	−12	−17	–	–	1 508	2 308	–
30	60	34	0	–	−13	−18	–	–	1 723	2 500	–
32	60	34	0	–	−13	−18	–	–	1 815	2 769	–
34	70	40	0	–	−14	−19	–	–	2 038	3 115	–

Tolerances for axial internal clearance and preload

Tolerances for axial internal clearance and preload of bearing sets with universal bearings in O and X arrangement ➤*296*|▦*4*.

4
Tolerances for axial internal clearance and preload of bearing sets with universal bearings in O or X arrangement

Bore code	Tolerances µm					
	Bearing series					
	70..-B, 72..-B		73..-B		74..-B	
	Tolerance class					
	Normal, 6	5	Normal, 6	5	Normal, 6	5
00 to 07	+8 0	+6 0	+8 0	+6 0	+8 0	+6 0
08 to 09	+8 0	+6 0	+8 0	+6 0	+12 0	+10 0
10 to 11	+8 0	+6 0	+12 0	+10 0	+12 0	+10 0
12 to 34	+12 0	+10 0	+12 0	+10 0	+12 0	+10 0

1.11 Dimensions, tolerances

Dimension standards

The main dimensions of angular contact ball bearings of the basic design correspond to DIN 628-1:2008 and ISO 12044:2014.
Nominal dimensions of angular contact ball bearings ➤*308*.

Chamfer dimensions

The limiting dimensions for chamfer dimensions correspond to DIN 620-6:2004. Overview and limiting values ➤*137*|*7.11*.
Nominal value of chamfer dimension ➤*308*.

Tolerances

The tolerances for the dimensional and running accuracy of single row angular contact ball bearings correspond to tolerance class Normal in accordance with ISO 492:2014. Tolerance values in accordance with ISO 492 ➤*124*|*8*.

Tolerances for bearings of universal design

Single row bearings are also available in tolerance class 5

In addition to the tolerance class Normal (no tolerance suffix), angular contact ball bearings of universal designs UA, UB, UO and UL are also available by agreement in tolerance class 5 and, in some cases, in tolerance class 6. Tolerance values in accordance with ISO 492 ➤*124*|*8* to ➤*129*|*16*. The tolerance suffix for bearings of universal design in tolerance class 5 is then:

- P5-UA, P5-UB, P5-UO, P5-UL

The bores of bearings of universal design for all tolerance classes are uniformly toleranced to tolerance class 5 (no special suffix).
The bearing width for universal bearings is toleranced to ISO 492:2014.
For width tolerances ➤*296*|*5*.

5
Tolerance for ring width in bearings of universal design

Tolerance symbols in accordance with ISO 492 ➤*117*|*6*
U = *upper limit deviation*
L = *lower limit deviation*

Nominal bore diameter d mm		Width deviation $t_{\Delta Bs}$ µm			
		Bearings in tolerance class			
		Normal, 6		5	
over	incl.	U	L	U	L
–	50	0	−250	0	−250
50	80	0	−380	0	−250
80	120	0	−380	0	−380
120	180	0	−500	0	−380
180	315	0	−500	0	−500

1.12 Suffixes

Suffixes describe the design and features of a bearing in more detail.

6
Suffixes and corresponding descriptions

Suffix	Description of suffix	
B	Modified internal construction, nominal contact angle $\alpha = 40°$	Standard
JP	Sheet steel cage	Standard, dependent on bore code
MP	Solid brass cage	
TVH, TVP	Solid cage made from glass fibre reinforced polyamide PA66	
P5	Bearing in tolerance class 5	Special design, available by agreement
2RS	Contact seal on both sides (lip seal)	Standard
UA	Universal design for fitting in pairs, bearing pair has a small axial internal clearance in O and X arrangement	
UB	Universal design for fitting in pairs, bearing pair has a smaller axial internal clearance in O and X arrangement than in UA	
UH	Universal design for fitting in pairs, bearing pair has a high preload in O and X arrangement	Available by agreement
UL	Universal design for fitting in pairs, bearing pair has a light preload in O and X arrangement	Standard
UM	Universal design for fitting in pairs, bearing pair has a moderate preload in O and X arrangement	Available by agreement
UO	Universal design for fitting in pairs, bearing pair is clearance-free in O and X arrangement	Standard
XL	X-life bearing, dependent on bore code and bearing type	Standard

1.13 Structure of bearing designation

With ***medias*** interchange, equivalent Schaeffler bearing designations can be determined for bearing designations from other rolling bearing manufacturers *https://www.schaeffler.de/std/1B69*.

Examples of composition of bearing designation

The designation of bearings follows a set model. Examples ➤*297*|*9* and ➤*298*|*10*. The composition of designations is subject to DIN 623-1 ➤*102*|*10*.

9
Single row angular contact ball bearing of basic design: designation structure

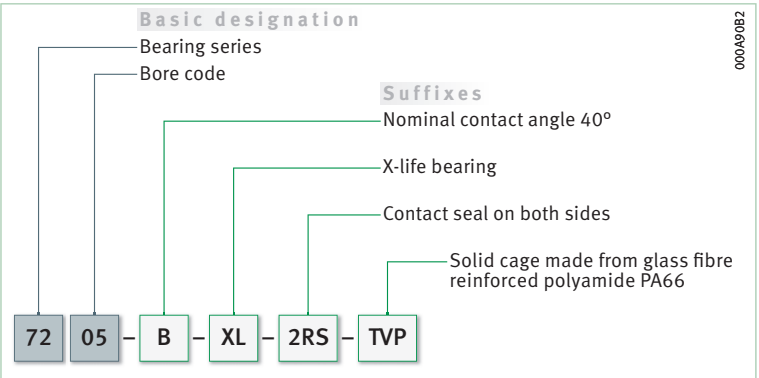

10
Single row angular contact ball bearing of universal design: designation structure

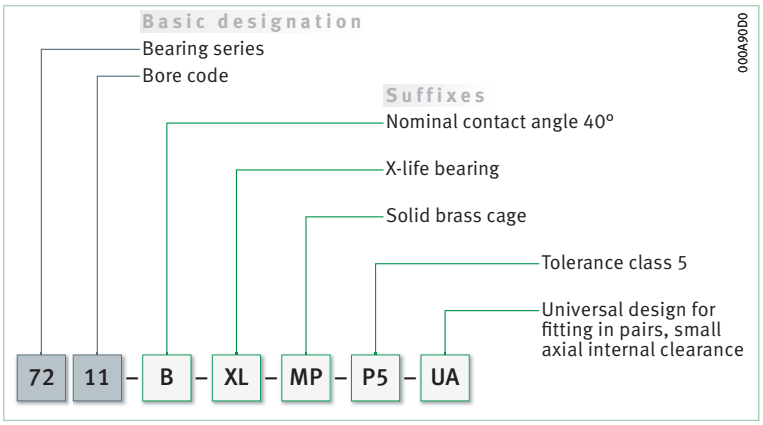

1.14 Dimensioning

Equivalent dynamic bearing load

✎ *$P = F_r$ under purely radial load of constant magnitude and direction*

The basic rating life equation $L = (C_r/P)^p$ used in the dimensioning of bearings under dynamic load assumes a load of constant magnitude and direction. In radial bearings, this is a purely radial load F_r. If this condition is met, the bearing load F_r is used directly in the rating life equation for P ($P = F_r$).

✎ *P is a substitute force for combined load and various load cases*

If this condition is not met, a constant radial force must first be determined for the rating life calculation that (in relation to the rating life) represents an equivalent load. This force is known as the equivalent dynamic bearing load P.

✎ *$F_a/F_r \leqq 1,14$ or $F_a/F_r > 1,14$*

The calculation of P is dependent on the load ratio F_a/F_r and the factor 1,14.

✎ *Tandem arrangement*

For single bearings under dynamic load and bearing pairs in a tandem arrangement ➤*298*| *1* and ➤*298*| *2*.

1
Equivalent dynamic load

$$\frac{F_a}{F_r} \leqq 1,14 \quad \Rightarrow \quad P = F_r$$

2
Equivalent dynamic load

$$\frac{F_a}{F_r} > 1,14 \quad \Rightarrow \quad P = 0,35 \cdot F_r + 0,57 \cdot F_a$$

Legend

P	N	Equivalent dynamic bearing load
F_r	N	Radial load
F_a	N	Resulting axial force ➤*299*| *7*. The information in the section “Calculation of internal resulting axial force F_a for single bearings and for bearings in a tandem arrangement” must be taken into consideration when calculating F_a ➤*299*.

Bearing pairs in O or X arrangement

For bearing pairs under dynamic load in O or X arrangement ➤299| 𝑓1 3 and ➤299| 𝑓1 4.

𝑓1 3
Equivalent dynamic load

$$\frac{F_a}{F_r} \leqq 1{,}14 \quad \Rightarrow \quad P = F_r + 0{,}55 \cdot F_a$$

𝑓1 4
Equivalent dynamic load

$$\frac{F_a}{F_r} > 1{,}14 \quad \Rightarrow \quad P = 0{,}57 \cdot F_r + 0{,}93 \cdot F_a$$

Legend

P	N	Equivalent dynamic bearing load
F_r	N	Radial load
F_a	N	Resulting axial force ➤298| 𝑓1 2 and ➤299| ▦ 7.

Calculation of internal resulting axial force F_a for single bearings and for bearings in a tandem arrangement

Equations for calculation of internal resulting axial force F_a

Single row angular contact ball bearings transmit radial forces from one raceway to the other oblique to the bearing axis. In the case of a shaft supported by two single row angular contact ball bearings of identical or different size, the radial load on bearing A therefore leads, due to the inclination of the raceways ($\alpha \neq 0°$), to an axial load on bearing B. The radial load on bearing B also has the effect of an axial load on bearing A; external forces in bearing systems of this type ➤299| 11 and ➤300| 12. This internal resulting axial force F_a must be taken into consideration in the calculation of the equivalent dynamic bearing load P. Equations for calculation of resulting axial force F_a ➤299| ▦ 7. The table shows the magnitude of the resulting axial force – that is the sum of or the difference between the internal and external axial force – for bearing arrangements in accordance with ➤299| 11 and ➤300| 12. The following applies to the table: the bearing aligned to the external axial force K_a is marked A and the opposing bearing is marked B.

Preconditions for calculation

Bearing A is subjected to a radial load F_{rA}, bearing B to a radial load F_{rB} ➤299| 11 and ➤300| 12. F_{rA} and F_{rB} act at the central pressure points of the bearings (dimension a in the product tables) and are always regarded as positive. The bearings are clearance-free, but without preload.

▦ 7
Equations for calculation of the internal resulting axial force F_a

Parameters ➤298| 𝑓1 2, ➤299| 11 and ➤300| 12

$Y_A = Y_B = 0{,}57$

Case	Load ratio	External axial force	Resulting axial force F_a	
			Bearing A	Bearing B
1	$\frac{F_{rA}}{Y_A} \leqq \frac{F_{rB}}{Y_B}$	$K_a \geqq 0$	$F_{aA} = K_a + 0{,}5 \cdot \frac{F_{rB}}{Y_B}$	F_a is not taken into consideration in the calculation
2	$\frac{F_{rA}}{Y_A} > \frac{F_{rB}}{Y_B}$	$K_a > 0{,}5 \cdot \left(\frac{F_{rA}}{Y_A} - \frac{F_{rB}}{Y_B}\right)$	$F_{aA} = K_a + 0{,}5 \cdot \frac{F_{rB}}{Y_B}$	F_a is not taken into consideration in the calculation
3	$\frac{F_{rA}}{Y_A} > \frac{F_{rB}}{Y_B}$	$K_a \leqq 0{,}5 \cdot \left(\frac{F_{rA}}{Y_A} - \frac{F_{rB}}{Y_B}\right)$	F_a is not taken into consideration in the calculation	$F_{aB} = 0{,}5 \cdot \frac{F_{rA}}{Y_A} - K_a$

11
Adjusted bearing arrangement with two single row angular contact ball bearings in O arrangement, external forces

K_a = *external axial force acting on the shaft*
F_{rA} = *radial load, bearing A*
F_{rB} = *radial load, bearing B*

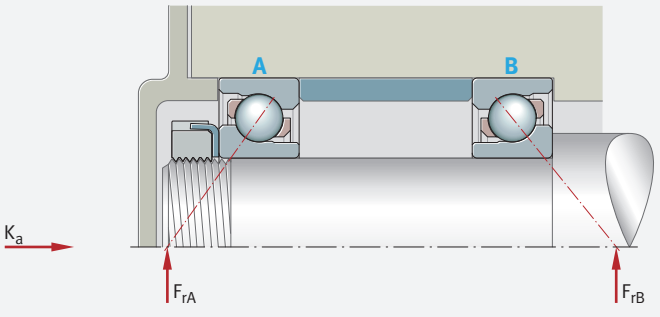

12
Adjusted bearing arrangement with two single row angular contact ball bearings in X arrangement, external forces

K_a = *external axial force acting on the shaft*
F_{rA} = *radial load, bearing A*
F_{rB} = *radial load, bearing B*

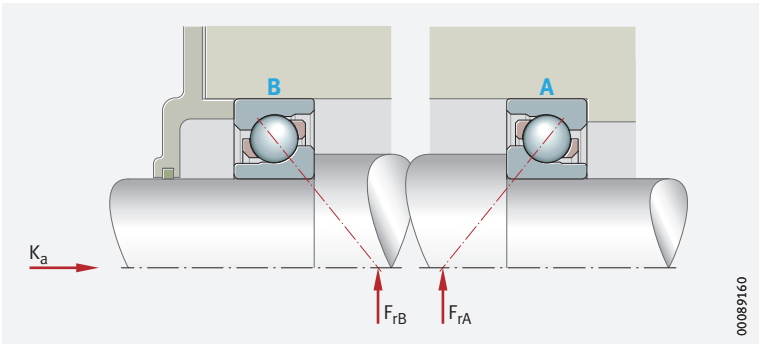

Example of calculation of internal resulting axial force F_a

Bearing arrangement for pinion shaft

Single row angular contact ball bearings are used for the bearing arrangement of a pinion shaft ➤*300*| *13*. The bearing arrangement should be adjusted and in an O arrangement. In order to calculate the basic rating life, the equivalent dynamic bearing load P must be determined.

13
Load scheme for pinion shaft

K_a = *external axial force = 6,52 kN*
K_r = *external radial force = 0,82 kN*
K_t = *tangential force = 5,88 kN*

Resulting radial forces F_r
Bearing A, F_{rA} = 7,30 kN
Bearing B, F_{rB} = 2,20 kN

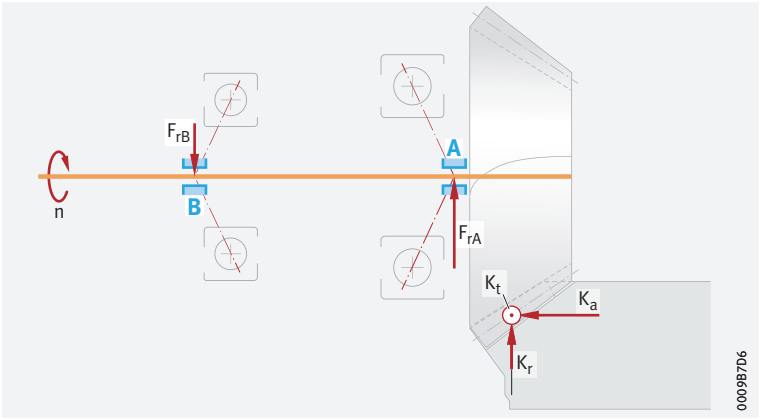

In a bearing arrangement with two single bearings, the resulting axial force F_a must be taken into consideration

Bearing A supports the external axial force K_a. Since this is an adjusted bearing arrangement with two single bearings, the internal resulting axial force F_a in the bearing system must be taken into consideration in the bearing calculation in accordance with ➤*299*| *7*. For both angular contact ball bearings $Y_A = Y_B = 0{,}57$. Loads ➤*300*| *13*.

Step 1

Calculate the load ratio using ➤*300*| *5*.

5
Load ratio

$$\frac{F_{rA}}{Y_A} > \frac{F_{rB}}{Y_B}$$

$$\frac{7{,}30\ \text{kN}}{0{,}57} > \frac{2{,}20\ \text{kN}}{0{,}57}$$

Step 2

Compare the result with possible cases ➤299| 7. Case 2 or case 3 can be considered ➤301| 8.

8 *Calculation of internal resulting axial force F_a*

Parameters ➤298| 2
$Y_A = Y_B = 0,57$

Case	Load ratio	External axial force	Resulting axial force F_a	
			Bearing A	Bearing B
2	$\frac{F_{rA}}{Y_A} > \frac{F_{rB}}{Y_B}$	$K_a > 0,5 \cdot \left(\frac{F_{rA}}{Y_A} - \frac{F_{rB}}{Y_B}\right)$	$F_{aA} = K_a + 0,5 \cdot \frac{F_{rB}}{Y_B}$	–
3		$K_a \leqq 0,5 \cdot \left(\frac{F_{rA}}{Y_A} - \frac{F_{rB}}{Y_B}\right)$	–	$F_{aB} = 0,5 \cdot \frac{F_{rA}}{Y_A} - K_a$

Step 3

Using ➤301| 6, check whether case 2 applies ➤301| 8.

6 *External axial force in relation to load ratio*

$$K_a > 0,5 \left(\frac{F_{rA}}{Y_A} - \frac{F_{rB}}{Y_B}\right)$$

$$6,52\,\text{kN} > 0,5 \left(\frac{7,30\,\text{kN}}{0,57} - \frac{2,20\,\text{kN}}{0,57}\right)$$
$$> 0,5\,(12,807\,\text{kN} - 3,859\,\text{kN})$$
$$6,52\,\text{kN} > 4,474\,\text{kN}$$

Case 2 applies ➤301| 8. This means that bearing A supports the external axial force K_a.

Step 4

Calculating F_a

Using ➤301| 7, calculate the internal resulting axial force F_a for bearing A. The calculations are in accordance with ➤301| 8, case 2.

7 *Internal resulting axial force*

$$F_{aA} = K_a + 0,5 \cdot \frac{F_{rB}}{Y_B}$$

$$F_{aA} = 6,52\,\text{kN} + 0,5 \cdot \frac{2,20\,\text{kN}}{0,57}$$
$$= 8,45\,\text{kN}$$

Using value F_a in the calculation of P

For calculation of the equivalent dynamic bearing load P, the calculated value for F_a in ➤298| 2 is then used for bearing A, since $F_a/F_{rA} > 1,14$ (8,45 kN/7,30 kN > 1,14).

Equivalent static bearing load

Tandem arrangement

For single bearings under static load and bearing pairs in a tandem arrangement ➤301| 8 and ➤301| 9.

8 *Equivalent static load*

$$\frac{F_{0a}}{F_{0r}} \leqq 1,9 \quad \Rightarrow \quad P_0 = F_{0r}$$

9 *Equivalent static load*

$$\frac{F_{0a}}{F_{0r}} > 1,9 \quad \Rightarrow \quad P_0 = 0,5 \cdot F_{0r} + 0,26 \cdot F_{0a}$$

Legend

P_0	N	Equivalent static bearing load
F_{0r}, F_{0a}	N	Largest radial or axial load present (maximum load).

For bearing pairs under static load in an O or X arrangement ➤*302*| *11*.

11
Equivalent static load

$$P_0 = F_{0r} + 0{,}52 \cdot F_{0a}$$

Legend

P_0	N	Equivalent static bearing load
F_{0r}, F_{0a}	N	Largest radial or axial load present (maximum load).

Static load safety factor

✎ $S_0 = C_0/P_0$

In addition to the basic rating life L (L_{10h}), it is also always necessary to check the static load safety factor S_0 ➤*302*| *11*.

11
Static load safety factor

$$S_0 = \frac{C_0}{P_0}$$

Legend

S_0	–	Static load safety factor
C_0	N	Basic static load rating
P_0	N	Equivalent static bearing load.

1.15 Minimum load

✎ *In order to prevent damage due to slippage, a minimum radial load of $P > C_{0r}/100$ is required*

In order that no slippage occurs between the contact partners, the angular contact ball bearings must be constantly subjected to a sufficiently high load. Based on experience, a minimum radial load of the order of $P > C_{0r}/100$ is thus necessary. In most cases, however, the radial load is already higher than the requisite minimum load due to the weight of the supported parts and the external forces.

If the minimum radial load is lower than indicated above, please consult Schaeffler.

1.16 Design of bearing arrangements

✎ *Support bearing rings over their entire circumference and width*

In order to allow full utilisation of the load carrying capacity of the bearings and thus also achieve the requisite rating life, the bearing rings must be rigidly and uniformly supported by means of contact surfaces over their entire circumference and over the entire width of the raceway. Support can be provided by means of a cylindrical seating surface. The seating and contact surfaces should not be interrupted by grooves, holes or other recesses. The accuracy of mating parts must meet specific requirements ➤*303*| *9* to ➤*304*| *11*.

Radial location of bearings – fit recommendations

✎ *For secure radial location, tight fits are necessary*

In addition to supporting the rings adequately, the bearings must also be securely located in a radial direction, to prevent creep of the bearing rings on the mating parts under load. This is generally achieved by means of tight fits between the bearing rings and the mating parts. If the rings are not secured adequately or correctly, this can cause severe damage to the bearings and adjacent machine parts. Influencing factors, such as the conditions of rotation, magnitude of the load, internal clearance, temperature conditions, design of the mating parts and the mounting and dismounting options must be taken into consideration in the selection of fits.

If shock type loads occur, tight fits (transition fit or interference fit) are required to prevent the rings from coming loose at any point. Clearance, transition or interference fits ➤*152*| *6* and ➤*160*| *7*.

The following information provided in Technical principles must be taken into consideration in the design of bearing arrangements:

- criteria for selection of fits ➤*146*
- conditions of rotation ➤*147*
- tolerance classes for cylindrical shaft seats (radial bearings) ➤*149*|▦ *2*
- shaft fits ➤*152*|▦ *6*
- tolerance classes for bearing seats in housings (radial bearings) ➤*150*|▦ *4*
- housing fits ➤*160*|▦ *7*

Axial location of bearings – location methods

✎ *The bearings must also be securely located in an axial direction*

As a tight fit alone is not normally sufficient to also locate the bearing rings securely on the shaft and in the housing bore in an axial direction, this must usually be achieved by means of an additional axial location or retention method. The axial location of the bearing rings must be matched to the type of bearing arrangement. Shaft and housing shoulders, housing covers, nuts, spacer rings and retaining rings etc., are fundamentally suitable ➤*299*|⧉ *11* and ➤*300*|⧉ *12*.

Dimensional, geometrical and running accuracy of the bearing seats

✎ *A minimum of IT6 should be provided for the shaft seat and a minimum of IT7 for the housing seat*

The accuracy of the bearing seat on the shaft and in the housing should correspond to the accuracy of the bearing used. For single row angular contact ball bearings with the tolerance class Normal, the shaft seat should correspond to a minimum of standard tolerance grade IT6 and the housing seat to a minimum of IT7; with tolerance class 6, the shaft seat should correspond to a minimum of IT5 and the housing seat to IT6. Guide values for the geometrical and positional tolerances of bearing seating surfaces ➤*303*|▦ *9*. Tolerances t_1 to t_3 in accordance with ➤*170*|⧉ *11*. Numerical values for IT grades ➤*304*|▦ *10*.

▦ **9** *Guide values for the geometrical and positional tolerances of bearing seating surfaces*

Bearing tolerance class		Bearing seating surface	Standard tolerance grades to ISO 286-1 (IT grades)			
to ISO 492	to DIN 620		Diameter tolerance	Roundness tolerance t_1	Parallelism tolerance t_2	Total axial runout tolerance of abutment shoulder t_3
Normal	PN (P0)	Shaft	IT6 (IT5)	Circumferential load IT4/2	Circumferential load IT4/2	IT4
				Point load IT5/2	Point load IT5/2	
		Housing	IT7 (IT6)	Circumferential load IT5/2	Circumferential load IT5/2	IT5
				Point load IT6/2	Point load IT6/2	
6	P6	Shaft	IT5	Circumferential load IT3/2	Circumferential load IT3/2	IT3
				Point load IT4/2	Point load IT4/2	
		Housing	IT6	Circumferential load IT4/2	Circumferential load IT4/2	IT4
				Point load IT5/2	Point load IT5/2	

10
Numerical values for ISO standard tolerances (IT grades) to ISO 286-1:2010

IT grade	Nominal dimension in mm							
	over 3	6	10	18	30	50	80	120
	incl. 6	10	18	30	50	80	120	180
	Values in µm							
IT3	2,5	2,5	3	4	4	5	6	8
IT4	4	4	5	6	7	8	10	12
IT5	5	6	8	9	11	13	15	18
IT6	8	9	11	13	16	19	22	25
IT7	12	15	18	21	25	30	35	40

Roughness of cylindrical bearing seats

✎ Ra must not be too high

The roughness of the bearing seats must be matched to the tolerance class of the bearings. The mean roughness value Ra must not be too high, in order to maintain the interference loss within limits. The shafts must be ground, while the bores must be precision turned. Guide values as a function of the IT grade of bearing seating surfaces ➤*304*|▦ *11*.

11
Roughness values for cylindrical bearing seating surfaces – guide values

Nominal diameter of the bearing seat d (D) mm		Recommended mean roughness value for ground bearing seats Ramax µm			
		Diameter tolerance (IT grade)			
over	incl.	IT7	IT6	IT5	IT4
–	80	1,6	0,8	0,4	0,2
80	500	1,6	1,6	0,8	0,4

Mounting dimensions for the contact surfaces of bearing rings

✎ The contact surfaces for the rings must be of sufficient height

The mounting dimensions of the shaft and housing shoulders, and spacer rings etc., must ensure that the contact surfaces for the bearing rings are of sufficient height. However, they must also reliably prevent rotating parts of the bearing from grazing stationary parts. Proven mounting dimensions for the radii and diameters of abutment shoulders ➤*308*|▦. These dimensions are limiting dimensions (maximum or minimum dimensions); the actual values should not be higher or lower than specified.

If single row angular contact bearings are mounted in a tandem arrangement, it must be ensured that the end faces of the outer rings in contact with each other have sufficient overlap. In case of doubt, please consult Schaeffler.

Adjustment of bearings

✎ Always adjust single bearings against a second bearing

Single row angular contact ball bearings must always be used with a second bearing or as a bearing set ➤*305*|◯ *14*. If two individual single row angular contact ball bearings are used, these must be adjusted against each other until the requisite preload or desired clearance is achieved.

✎ Select the adjustment such that full function and operational reliability of the bearings is ensured

The correct adjustment of the bearings has a considerable influence on the function and operational reliability of the bearing arrangement. If the clearance is too large, the load carrying capacity of the bearings will not be fully utilised; if the preload is too high, the increased friction losses will give rise to higher operating temperatures, which will, in turn, have a negative effect on the rating life of the bearings.

14
Adjusted bearing arrangement with two single row angular contact ball bearings

① *Angular contact ball bearings mounted in X arrangement*

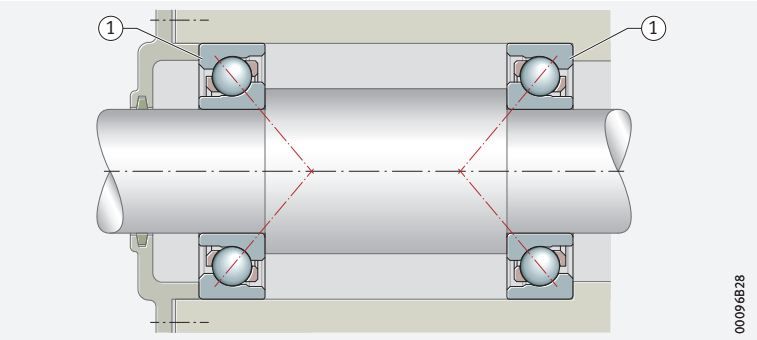

Adjustment not required for bearing sets

Universal bearings arranged immediately adjacent to each other, or matched bearings, do not need to be adjusted. In such cases, the desired operating clearance or required preload is achieved by selecting the internal clearance or preload class in conjunction with the suitable shaft and housing fits. As a result, particular attention must be paid to the correct selection of internal clearance or preload for these bearing sets.

1.17 Mounting and dismounting

The mounting and dismounting options for angular contact ball bearings, by thermal, hydraulic or mechanical methods, must be taken into consideration in the design of the bearing position.

Ensure that the bearings are not damaged during mounting

Single row angular contact ball bearings are not separable. In the mounting of such bearings, the mounting forces must always be applied to the bearing ring with a tight fit.

Schaeffler Mounting Handbook

Rolling bearings must be handled with great care

Rolling bearings are well-proven precision machine elements for the design of economical and reliable bearing arrangements, which offer high operational security. In order that these products can function correctly and achieve the envisaged operating life without detrimental effect, they must be handled with care.

The Schaeffler Mounting Handbook MH 1 gives comprehensive information about the correct storage, mounting, dismounting and maintenance of rotary rolling bearings *https://www.schaeffler.de/std/1D53*. It also provides information which should be observed by the designer, in relation to the mounting, dismounting and maintenance of bearings, in the original design of the bearing position. This book is available from Schaeffler on request.

1.18 Legal notice regarding data freshness

The further development of products may also result in technical changes to catalogue products

Of central interest to Schaeffler is the further development and optimisation of its products and the satisfaction of its customers. In order that you, as the customer, can keep yourself optimally informed about the progress that is being made here and with regard to the current technical status of the products, we publish any product changes which differ from the printed version in our electronic product catalogue.

We therefore reserve the right to make changes to the data and illustrations in this catalogue. This catalogue reflects the status at the time of printing. More recent publications released by us (as printed or digital media) will automatically precede this catalogue if they involve the same subject. Therefore, please always use our electronic product catalogue to check whether more up-to-date information or modification notices exist for your desired product.

Link to electronic product catalogue

The following link will take you to the Schaeffler electronic product catalogue: *https://medias.schaeffler.com*.

1.19 Further information

In addition to the data in this chapter, the following chapters in Technical principles must also be observed in the design of bearing arrangements:

- Determining the bearing size ➤*34*
- Rigidity ➤*54*
- Friction and increases in temperature ➤*56*
- Speeds ➤*64*
- Bearing data ➤*97*
- Lubrication ➤*70*
- Sealing ➤*185*
- Design of bearing arrangements ➤*141*
- Mounting and dismounting ➤*194*



Angular contact ball bearings

Single row

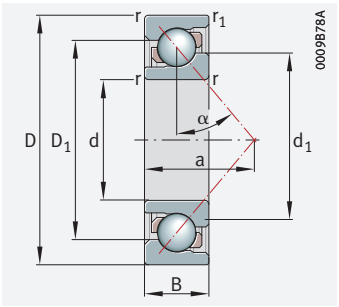

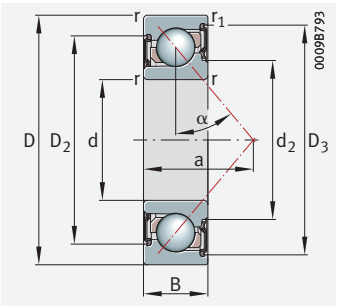

With seal 2RS

d = 10 – 20 mm

Main dimensions			Basic load ratings		Fatigue limit load	Limiting speed	Speed rating	Mass	Designation
d	D	B	dyn. C_r	stat. C_{0r}	C_{ur}	n_G	$n_{\vartheta r}$	m	➤297 | 1.12 ➤297 | 1.13 X-life ➤289
			N	N	N	min^{-1}	min^{-1}	≈ kg	
10	30	9	5 300	2 600	179	34 500	22 600	0,033	**7200-B-XL-JP**
	30	9	5 300	2 600	179	34 500	22 600	0,032	**7200-B-XL-TVP**
	30	9	5 300	2 600	179	16 100	–	0,037	**7200-B-XL-2RS-TVP**
12	32	10	7 400	3 550	248	30 000	21 100	0,037	**7201-B-XL-JP**
	32	10	7 400	3 550	248	30 000	21 100	0,038	**7201-B-XL-TVP**
	32	10	7 400	3 550	248	14 800	–	0,037	**7201-B-XL-2RS-TVP**
	37	12	11 400	5 300	365	25 500	16 300	0,066	**7301-B-XL-JP**
	37	12	11 400	5 300	365	25 500	16 300	0,06	**7301-B-XL-TVP**
15	35	11	8 400	4 450	305	27 000	19 100	0,045	**7202-B-XL-JP**
	35	11	8 400	4 450	305	27 000	19 100	0,044	**7202-B-XL-TVP**
	35	11	8 400	4 450	305	12 800	–	0,048	**7202-B-XL-2RS-TVP**
	42	13	14 200	7 200	495	22 200	14 200	0,084	**7302-B-XL-JP**
	42	13	14 200	7 200	495	22 200	14 200	0,081	**7302-B-XL-TVP**
	42	13	14 200	7 200	495	11 100	–	0,082	**7302-B-XL-2RS-TVP**
17	40	12	10 500	5 700	395	23 400	17 100	0,067	**7203-B-XL-JP**
	40	12	10 500	5 700	395	23 400	17 100	0,065	**7203-B-XL-TVP**
	40	12	10 500	5 700	395	11 100	–	0,068	**7203-B-XL-2RS-TVP**
	47	14	17 600	9 000	620	19 600	12 800	0,117	**7303-B-XL-JP**
	47	14	17 600	9 000	620	19 600	12 800	0,11	**7303-B-XL-TVP**
	47	14	17 600	9 000	620	9 800	–	0,112	**7303-B-XL-2RS-TVP**
20	42	12	14 500	8 000	560	20 500	14 400	0,061	**7004-B-XL-TVP**
	42	12	14 500	8 000	560	9 800	–	0,061	**7004-B-XL-2RS-TVP**
	47	14	14 000	7 800	540	19 700	15 400	0,106	**7204-B-XL-JP**
	47	14	14 000	7 800	540	19 700	15 400	0,103	**7204-B-XL-TVP**
	47	14	14 000	7 800	540	9 500	–	0,107	**7204-B-XL-2RS-TVP**
	52	15	20 400	11 100	770	17 600	11 500	0,149	**7304-B-XL-JP**
	52	15	20 400	11 100	770	17 600	11 500	0,147	**7304-B-XL-TVP**
	52	15	20 400	11 100	770	8 600	–	0,147	**7304-B-XL-2RS-TVP**

medias *https://www.schaeffler.de/std/1F9A*

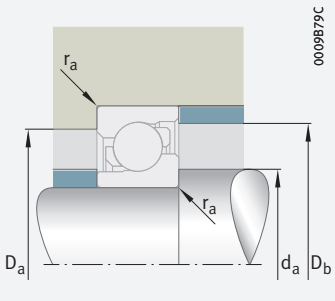

Mounting dimensions

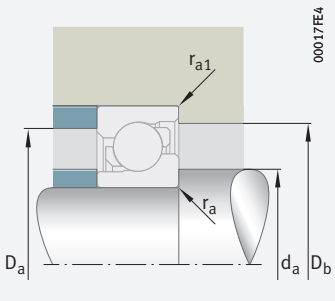

Mounting dimensions

Dimensions									Nominal contact angle	Mounting dimensions				
d	r	r_1	D_1	D_2	D_3	d_1	d_2	a	α	d_a	D_a	D_b	r_a	r_{a1}
	min.	min.	≈	≈	≈	≈	≈	≈	°	min.	max.	max.	max.	max.
10	0,6	0,3	22	–	–	18,3	–	13	40	14,2	25,8	27,6	0,6	0,3
	0,6	0,3	22	–	–	18,3	–	13	40	14,2	25,8	27,6	0,6	0,3
	0,6	0,3	22	23,2	25,4	–	15,5	13	40	14,2	25,8	27,6	0,6	0,3
12	0,6	0,3	24,6	–	–	19,8	–	14	40	16,2	27,8	29,6	0,6	0,3
	0,6	0,3	24,6	–	–	19,8	–	14	40	16,2	27,8	29,6	0,6	0,3
	0,6	0,3	24,6	25,9	28,8	–	17	14	40	16,2	27,8	29,6	0,6	0,3
	1	0,6	27,2	–	–	22,3	–	16	40	17,6	31,4	32,8	1	0,6
	1	0,6	27,2	–	–	22,3	–	16	40	17,6	31,4	32,8	1	0,6
15	0,6	0,3	27,6	–	–	22,8	–	16	40	19,2	30,8	32,6	0,6	0,3
	0,6	0,3	27,6	–	–	22,8	–	16	40	19,2	30,8	32,6	0,6	0,3
	0,6	0,3	27,6	29,2	32,1	–	19,7	16	40	19,2	30,8	32,6	0,6	0,3
	1	0,6	31,7	–	–	26	–	18	40	20,6	36,4	37,8	1	0,6
	1	0,6	31,7	–	–	26	–	18	40	20,6	36,4	37,8	1	0,6
	1	0,6	31,7	33,3	38,1	–	22,9	18	40	20,6	36,4	37,8	1	0,6
17	0,6	0,3	31,5	–	–	26	–	18	40	21,2	35,8	37,6	0,6	0,6
	0,6	0,3	31,5	–	–	26	–	18	40	21,2	35,8	37,6	0,6	0,6
	0,6	0,3	31,5	33,1	36,3	–	22,9	18	40	21,2	35,8	37,6	0,6	0,6
	1	0,6	35,5	–	–	29,2	–	20	40	22,6	41,4	42,8	1	0,6
	1	0,6	35,5	–	–	29,2	–	20	40	22,6	41,4	42,8	1	0,6
	1	0,6	35,5	37,2	42,6	–	26,1	20	40	22,6	41,4	42,8	1	0,6
20	0,6	0,3	34,8	–	–	28,9	–	19,4	40	23,2	38,8	40	0,6	0,3
	0,6	0,3	34,8	35,5	39,8	–	26,5	19,4	40	23,2	38,8	40	0,6	0,3
	1	0,6	37	–	–	30,5	–	21	40	25,6	41,4	42,8	1	0,6
	1	0,6	37	–	–	30,5	–	21	40	25,6	41,4	42,8	1	0,6
	1	0,6	37	39,2	43	–	26,8	21	40	25,6	41,4	42,8	1	0,6
	1,1	0,6	39,7	–	–	33	–	23	40	27	45	47,8	1	0,6
	1,1	0,6	39,7	–	–	33	–	23	40	27	45	47,8	1	0,6
	1,1	0,6	39,7	41,4	47,1	–	30	23	40	27	45	47,8	1	0,6

Angular contact ball bearings

Single row

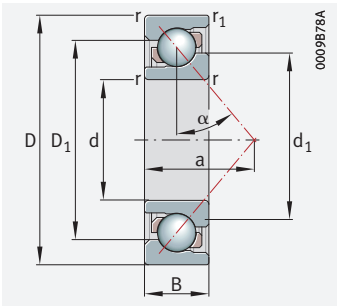

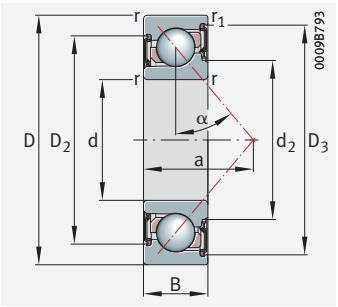

With seal 2RS

d = 25 – 35 mm

Main dimensions			Basic load ratings		Fatigue limit load	Limiting speed	Speed rating	Mass	Designation
d	D	B	dyn. C_r	stat. C_{0r}	C_{ur}	n_G	$n_{\vartheta r}$	m	➤297 | 1.12 ➤297 | 1.13 X-life ➤289
			N	N	N	min^{-1}	min^{-1}	≈ kg	
25	47	12	16 000	9 900	690	18 100	12 000	0,071	**7005-B-XL-TVP**
	47	12	16 000	9 900	690	7 900	–	0,071	**7005-B-XL-2RS-TVP**
	52	15	15 300	9 000	620	17 400	13 700	0,13	**7205-B-XL-JP**
	52	15	15 300	9 000	620	17 400	13 700	0,127	**7205-B-XL-TVP**
	52	15	15 300	9 000	620	8 000	–	0,132	**7205-B-XL-2RS-TVP**
	62	17	28 000	15 800	1 100	14 300	9 800	0,242	**7305-B-XL-JP**
	62	17	28 000	15 800	1 100	14 300	9 800	0,223	**7305-B-XL-TVP**
	62	17	28 000	15 800	1 100	7 100	–	0,231	**7305-B-XL-2RS-TVP**
	80	21	43 500	26 000	1 800	15 100	7 500	0,585	**7405-B-XL-MP**
30	42	7	5 600	4 550	300	20 600	9 600	0,026	**71806-B-TVH**
	55	13	19 900	13 400	930	15 200	10 200	0,109	**7006-B-XL-TVP**
	55	13	19 900	13 400	930	6 500	–	0,109	**7006-B-XL-2RS-TVP**
	62	16	21 700	14 100	980	14 400	11 200	0,203	**7206-B-XL-JP**
	62	16	21 700	14 100	980	14 400	11 200	0,197	**7206-B-XL-TVP**
	62	16	21 700	14 100	980	6 500	–	0,204	**7206-B-XL-2RS-TVP**
	72	19	35 500	22 100	1 530	12 300	8 600	0,362	**7306-B-XL-JP**
	72	19	35 500	22 100	1 530	12 300	8 600	0,341	**7306-B-XL-TVP**
	72	19	35 500	22 100	1 530	6 000	–	0,341	**7306-B-XL-2RS-TVP**
	90	23	51 000	30 500	2 110	13 100	6 800	0,791	**7406-B-XL-MP**
35	47	7	6 000	5 300	360	18 100	8 200	0,029	**71807-B-TVH**
	62	14	24 300	17 200	1 200	13 400	9 000	0,14	**7007-B-XL-TVP**
	62	14	24 300	17 200	1 200	6 000	–	0,14	**7007-B-XL-2RS-TVP**
	72	17	28 000	19 000	1 320	12 200	9 600	0,29	**7207-B-XL-JP**
	72	17	28 000	19 000	1 320	12 200	9 600	0,282	**7207-B-XL-TVP**
	72	17	28 000	19 000	1 320	5 600	–	0,292	**7207-B-XL-2RS-TVP**
	80	21	43 000	27 500	1 910	10 800	7 900	0,48	**7307-B-XL-JP**
	80	21	43 000	27 500	1 910	10 800	7 900	0,48	**7307-B-XL-TVP**
	80	21	43 000	27 500	1 910	5 300	–	0,477	**7307-B-XL-2RS-TVP**
	100	25	65 000	43 000	3 000	11 000	5 400	1,01	**7407-B-XL-MP**

medias *https://www.schaeffler.de/std/1F9A*

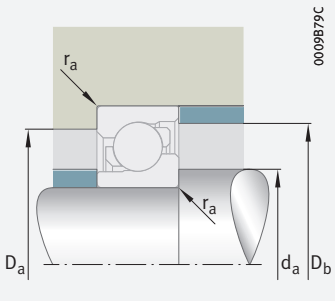

Mounting dimensions

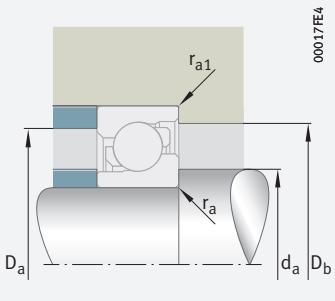

Mounting dimensions

Dimensions									Nominal contact angle	Mounting dimensions				
d	r	r_1	D_1	D_2	D_3	d_1	d_2	a	α	d_a	D_a	D_b	r_a	r_{a1}
	min.	min.	≈	≈	≈	≈	≈	≈	°	min.	max.	max.	max.	max.
25	0,6	0,3	39,8	–	–	33,9	–	21	40	28,2	43,8	45	0,6	0,3
	0,6	0,3	39,8	40,5	44,8	–	31,5	21	40	28,2	43,8	45	0,6	0,3
	1	0,6	42	–	–	35,5	–	24	40	30,6	46,4	47,8	1	0,6
	1	0,6	42	–	–	35,5	–	24	40	30,6	46,4	47,8	1	0,6
	1	0,6	42	44,1	48	–	31,8	24	40	30,6	46,4	47,8	1	0,6
	1,1	0,6	48	–	–	39,9	–	27	40	32	55	57,8	1	0,6
	1,1	0,6	48	–	–	39,9	–	27	40	32	55	57,8	1	0,6
	1,1	0,6	48	50,3	57,1	–	36,2	27	40	32	55	57,8	1	0,6
	1,5	1	57,9	–	–	48,2	–	33	40	36	69	74,4	1,5	1
30	0,3	0,2	37,3	–	–	34,7	–	18,6	40	32	40	40	0,3	0,2
	1	0,6	47,1	–	–	41,3	–	24	40	34,6	50,4	51,8	1	0,6
	1	0,6	47,1	47,7	51,9	–	38	24	40	34,6	50,4	51,8	1	0,6
	1	0,6	49,5	–	–	43,2	–	27	40	35,6	56,4	57,8	1	0,6
	1	0,6	49,5	–	–	43,2	–	27	40	35,6	56,4	57,8	1	0,6
	1	0,6	49,5	51,7	57,1	–	39,5	27	40	35,6	56,4	57,8	1	0,6
	1,1	0,6	55,9	–	–	47,1	–	31	40	37	65	67,8	1	0,6
	1,1	0,6	55,9	–	–	47,1	–	31	40	37	65	67,8	1	0,6
	1,1	0,6	55,9	58,5	65,9	–	42,7	31	40	37	65	67,8	1	0,6
	1,5	1	66	–	–	55,3	–	37	40	41	79	84,4	1,5	1
35	0,3	0,2	42,3	–	–	39,7	–	20,7	40	37	45	45,6	0,3	0,2
	1	0,6	53,4	–	–	47	–	27	40	39,6	57,4	58,8	1	0,6
	1	0,6	53,4	54	58,9	–	43,6	27	40	39,6	57,4	58,8	1	0,6
	1,1	0,6	57,6	–	–	50,2	–	31	40	42	65	67,8	1	0,6
	1,1	0,6	57,6	–	–	50,2	–	31	40	42	65	67,8	1	0,6
	1,1	0,6	57,6	60,2	66,5	–	45,8	31	40	42	65	67,8	1	0,6
	1,5	1	63	–	–	53,1	–	35	40	44	71	74,4	1,5	1
	1,5	1	63	–	–	53,1	–	35	40	44	71	74,4	1,5	1
	1,5	1	63	65,6	73,9	–	48,7	35	40	44	71	74,4	1,5	1
	1,5	1	79,8	–	–	66,7	–	41	40	46	94,4	100	1,5	1

Angular contact ball bearings

Single row

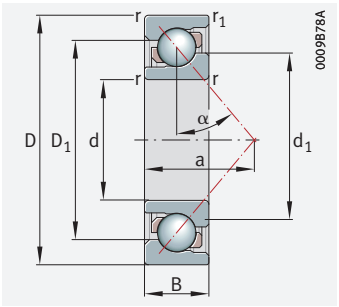

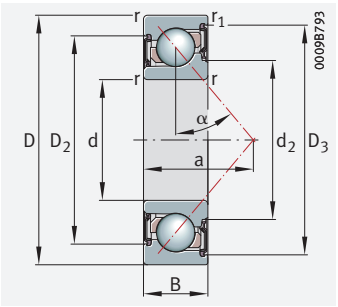

With seal 2RS

d = 40 – 55 mm

Main dimensions			Basic load ratings		Fatigue limit load	Limiting speed	Speed rating	Mass	Designation
d	D	B	dyn. C_r	stat. C_{0r}	C_{ur}	n_G	$n_{\vartheta r}$	m	➤297 | 1.12 ➤297 | 1.13 X-life ➤289
			N	N	N	min^{-1}	min^{-1}	≈ kg	
40	52	7	6 300	5 800	405	16 200	7 200	0,033	**71808-B-TVH**
	68	15	28 000	20 300	1 410	12 100	8 400	0,176	**7008-B-XL-TVP**
	68	15	28 000	20 300	1 410	5 200	–	0,17	**7008-B-XL-2RS-TVP**
	80	18	34 000	23 500	1 630	10 900	8 600	0,372	**7208-B-XL-JP**
	80	18	34 000	23 500	1 630	10 900	8 600	0,367	**7208-B-XL-TVP**
	80	18	34 000	23 500	1 630	5 000	–	0,379	**7208-B-XL-2RS-TVP**
	90	23	53 000	34 500	2 390	9 500	7 100	0,646	**7308-B-XL-JP**
	90	23	53 000	34 500	2 390	9 500	7 100	0,61	**7308-B-XL-TVP**
	90	23	53 000	34 500	2 390	4 650	–	0,61	**7308-B-XL-2RS-TVP**
	110	27	75 000	50 000	3 500	9 900	5 000	1,34	**7408-B-XL-MP**
45	58	7	6 600	6 500	465	14 500	6 300	0,041	**71809-B-TVH**
	85	19	37 500	27 000	1 870	10 000	8 000	0,411	**7209-B-XL-JP**
	85	19	37 500	27 000	1 870	10 000	8 000	0,405	**7209-B-XL-TVP**
	85	19	37 500	27 000	1 870	4 550	–	0,405	**7209-B-XL-2RS-TVP**
	100	25	65 000	43 000	3 000	8 400	6 500	0,937	**7309-B-XL-JP**
	100	25	65 000	43 000	3 000	8 400	6 500	0,937	**7309-B-XL-TVP**
	120	29	86 000	61 000	4 250	9 100	4 650	1,68	**7409-B-XL-MP**
50	65	7	7 000	7 400	540	12 900	5 400	0,058	**71810-B-TVH**
	90	20	39 000	28 500	1 970	9 300	7 600	0,466	**7210-B-XL-JP**
	90	20	39 000	28 500	1 970	9 300	7 600	0,456	**7210-B-XL-TVP**
	90	20	39 000	28 500	1 970	4 200	–	0,468	**7210-B-XL-2RS-TVP**
	110	27	75 000	50 000	3 500	7 600	6 100	1,13	**7310-B-XL-JP**
	110	27	75 000	50 000	3 500	7 600	6 100	1,05	**7310-B-XL-TVP**
	130	31	96 000	69 000	4 750	8 300	4 400	2,05	**7410-B-XL-MP**
55	72	9	11 800	11 800	780	11 400	5 600	0,084	**71811-B-TVH**
	100	21	49 000	38 500	2 650	8 300	6 800	0,645	**7211-B-XL-JP**
	100	21	49 000	38 500	2 650	8 300	6 800	0,604	**7211-B-XL-TVP**
	120	29	86 000	61 000	4 250	7 000	5 600	1,46	**7311-B-XL-JP**
	120	29	86 000	61 000	4 250	7 000	5 600	1,38	**7311-B-XL-TVP**
	140	33	110 000	82 000	5 600	7 700	4 150	2,64	**7411-B-XL-MP**

medias *https://www.schaeffler.de/std/1F9A*

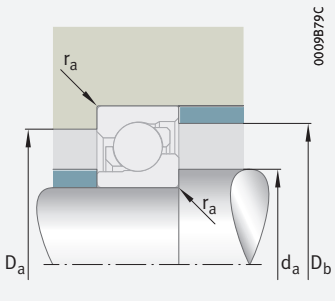

Mounting dimensions

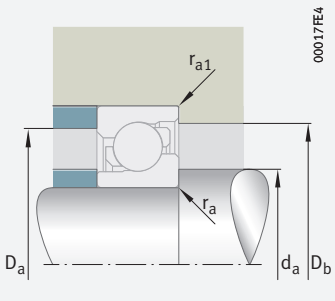

Mounting dimensions

Dimensions									Nominal contact angle	Mounting dimensions				
d	r	r_1	D_1	D_2	D_3	d_1	d_2	a	α	d_a	D_a	D_b	r_a	r_{a1}
	min.	min.	≈	≈	≈	≈	≈	≈	°	min.	max.	max.	max.	max.
40	0,3	0,2	47,3	–	–	44,7	–	22,8	40	42	50	50	0,3	0,2
	1	0,6	58,8	–	–	51,9	–	30	40	44,6	63,4	64,8	1	0,6
	1	0,6	58,8	59,4	65	–	48,3	30	40	44,6	63,4	64,8	1	0,6
	1,1	0,6	64,4	–	–	56,4	–	34	40	47	73	75,8	1	0,6
	1,1	0,6	64,4	–	–	56,4	–	34	40	47	73	75,8	1	0,6
	1,1	0,6	64,4	67	73,8	–	52	34	40	47	73	75,8	1	0,6
	1,5	1	71,3	–	–	60	–	39	40	49	81	84,4	1,5	1
	1,5	1	71,3	–	–	60	–	39	40	49	81	84,4	1,5	1
	1,5	1	71,3	73,9	83,3	–	55,6	39	40	49	81	84,4	1,5	1
	2	1	87,6	–	–	73,1	–	45	40	53	97	104,4	2	1
45	0,3	0,2	52,8	–	–	50,2	–	25,1	40	47	56	56	0,3	0,2
	1,1	0,6	69,8	–	–	61,2	–	37	40	52	78	80,8	1	0,6
	1,1	0,6	69,8	–	–	61,2	–	37	40	52	78	80,8	1	0,6
	1,1	0,6	69,8	72,4	79,6	–	56,8	37	40	52	78	80,8	1	0,6
	1,5	1	79,8	–	–	66,7	–	43	40	54	91	94,4	1,5	1
	1,5	1	79,8	–	–	66,7	–	43	40	54	91	94,4	1,5	1
	2	1	95,3	–	–	80,3	–	49	40	58	107	114,4	2	1
50	0,3	0,2	59,3	–	–	56,7	–	27,8	40	52	63	63	0,3	0,2
	1,1	0,6	74,8	–	–	66,3	–	39	40	57	83	85,8	1	0,6
	1,1	0,6	74,8	–	–	66,3	–	39	40	57	83	85,8	1	0,6
	1,1	0,6	74,8	77,4	84,6	–	61,8	39	40	57	83	85,8	1	0,6
	2	1	87,6	–	–	73,1	–	47	40	61	99	104,4	2	1
	2	1	87,6	–	–	73,1	–	47	40	61	99	104,4	2	1
	2,1	1,1	103,4	–	–	87,3	–	53	40	64	116	121	2,1	1
55	0,3	0,2	65,3	–	–	61,7	–	31,1	40	57	70	70	0,3	0,2
	1,5	1	83	–	–	72,6	–	43	40	64	91	94,4	1,5	1
	1,5	1	83	–	–	72,6	–	43	40	64	91	94,4	1,5	1
	2	1	95,3	–	–	80,3	–	51	40	66	109	114,4	2	1
	2	1	95,3	–	–	80,3	–	51	40	66	109	114,4	2	1
	2,1	1,1	111,5	–	–	95,3	–	57	40	69	126	131	2,1	1

Angular contact ball bearings

Single row

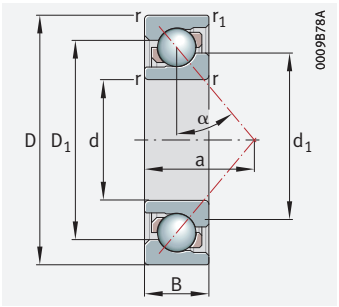

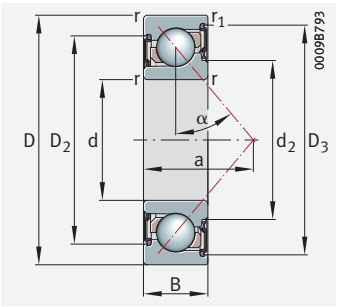

With seal 2RS

d = 60 – 80 mm

Main dimensions			Basic load ratings		Fatigue limit load	Limiting speed	Speed rating	Mass	Designation
d	D	B	dyn. C_r	stat. C_{0r}	C_{ur}	n_G	$n_{\vartheta r}$	m	➤297 | 1.12 ➤297 | 1.13 X-life ➤289
			N	N	N	min^{-1}	min^{-1}	≈ kg	
60	78	10	12 300	12 800	870	10 500	5 400	0,11	**71812-B-TVH**
	110	22	59 000	45 000	3 150	7 500	6 200	0,782	**7212-B-XL-JP**
	110	22	59 000	45 000	3 150	7 500	6 200	0,808	**7212-B-XL-TVP**
	110	22	59 000	45 000	3 150	3 450	–	0,78	**7212-B-XL-2RS-TVP**
	130	31	96 000	69 000	4 750	6 400	5 300	1,74	**7312-B-XL-JP**
	130	31	96 000	69 000	4 750	6 400	5 300	1,71	**7312-B-XL-TVP**
	150	35	126 000	93 000	6 200	7 100	3 950	3,1	**7412-B-XL-MP**
65	85	10	15 200	15 800	1 000	9 600	4 850	0,13	**71813-B-TVH**
	120	23	67 000	55 000	3 850	6 900	5 700	1,08	**7213-B-XL-JP**
	120	23	67 000	55 000	3 850	6 900	5 700	1	**7213-B-XL-TVP**
	140	33	110 000	82 000	5 600	5 900	5 000	2,22	**7313-B-XL-JP**
	140	33	110 000	82 000	5 600	5 900	5 000	2,12	**7313-B-XL-TVP**
	160	37	140 000	107 000	6 900	6 600	3 800	3,71	**7413-B-XL-MP**
70	90	10	15 800	17 200	1 100	9 000	4 500	0,14	**71814-B-TVH**
	125	24	74 000	62 000	4 300	6 500	5 400	1,17	**7214-B-XL-JP**
	125	24	74 000	62 000	4 300	6 500	5 400	1,08	**7214-B-XL-TVP**
	125	24	74 000	62 000	4 300	3 000	–	1,08	**7214-B-XL-2RS-TVP**
	150	35	126 000	93 000	6 200	5 500	4 750	2,76	**7314-B-XL-JP**
	150	35	126 000	93 000	6 200	5 500	4 750	2,58	**7314-B-XL-TVP**
	180	42	167 000	138 000	8 300	5 800	3 450	5,39	**7414-B-XL-MP**
75	95	10	16 200	18 100	1 170	8 500	4 150	0,15	**71815-B-TVH**
	130	25	73 000	62 000	4 250	6 300	5 300	1,25	**7215-B-XL-JP**
	130	25	73 000	62 000	4 250	6 300	5 300	1,16	**7215-B-XL-TVP**
	160	37	140 000	107 000	6 900	5 100	4 500	3,29	**7315-B-XL-JP**
	160	37	140 000	107 000	6 900	5 100	4 500	3,1	**7315-B-XL-TVP**
	190	45	167 000	138 000	8 300	5 800	3 750	6,7	**7415-B-XL-MP**
80	100	10	16 500	19 100	1 240	8 000	3 900	0,155	**71816-B-TVH**
	140	26	85 000	72 000	4 800	5 800	4 950	1,53	**7216-B-XL-JP**
	140	26	85 000	72 000	4 800	5 800	4 950	1,42	**7216-B-XL-TVP**
	170	39	155 000	124 000	7 700	4 750	4 250	3,86	**7316-B-XL-JP**
	170	39	155 000	124 000	7 700	4 750	4 250	3,66	**7316-B-XL-TVP**
	200	48	200 000	169 000	9 900	5 300	3 600	7,48	**7416-B-XL-MP**

medias *https://www.schaeffler.de/std/1F9A*

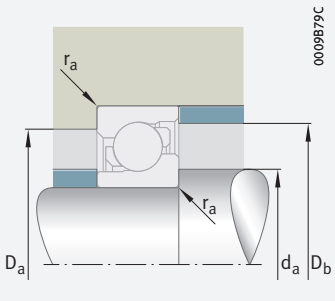

Mounting dimensions

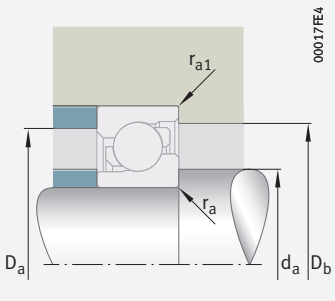

Mounting dimensions

Dimensions									Nominal contact angle	Mounting dimensions				
d	r	r_1	D_1	D_2	D_3	d_1	d_2	a	α	d_a	D_a	D_b	r_a	r_{a1}
	min.	min.	≈	≈	≈	≈	≈	≈	°	min.	max.	max.	max.	max.
60	0,3	0,2	70,8	–	–	67,2	–	33,9	40	62	76	76,6	0,3	0,2
	1,5	1	90,8	–	–	80,3	–	47	40	69	101	104,4	1,5	1
	1,5	1	90,8	–	–	80,3	–	47	40	69	101	104,4	1,5	1
	1,5	1	90,8	94,4	103,4	–	75,3	47	40	69	101	104,4	1,5	1
	2,1	1,1	103,4	–	–	87,3	–	55	40	72	118	123	2,1	1
	2,1	1,1	103,4	–	–	87,3	–	55	40	72	118	123	2,1	1
	2,1	1,1	119,6	–	–	102,3	–	62	40	74	136	141	2,1	1
65	0,6	0,3	77	–	–	73	–	36,5	40	68,2	81,8	83	0,6	0,3
	1,5	1	98,9	–	–	86,3	–	51	40	74	111	114,4	1,5	1
	1,5	1	98,9	–	–	86,3	–	51	40	74	111	114,4	1,5	1
	2,1	1,1	111,5	–	–	95,3	–	60	40	77	128	133	2,1	1
	2,1	1,1	111,5	–	–	95,3	–	60	40	77	128	133	2,1	1
	2,1	1,1	128	–	–	109,2	–	66	40	79	146	151	2,1	1
70	0,6	0,3	82	–	–	78	–	38,5	40	73,2	86,8	88	0,6	0,3
	1,5	1	104	–	–	92,3	–	53	40	79	116	119,4	1,5	1
	1,5	1	104	–	–	92,3	–	53	40	79	116	119,4	1,5	1
	1,5	1	104	107,6	117,9	–	87,3	53	40	79	116	119,4	1,5	1
	2,1	1,1	119,6	–	–	102,3	–	64	40	82	138	143	2,1	1
	2,1	1,1	119,6	–	–	102,3	–	64	40	82	138	143	2,1	1
	3	1,1	144,3	–	–	123,1	–	73	40	86	164	171	2,5	1
75	0,6	0,3	87	–	–	83	–	40,7	40	78,2	91,8	93	0,6	0,3
	1,5	1	109,2	–	–	96,5	–	56	40	84	121	124,4	1,5	1
	1,5	1	109,2	–	–	96,5	–	56	40	84	121	124,4	1,5	1
	2,1	1,1	128	–	–	109,2	–	68	40	87	148	153	2,1	1
	2,1	1,1	128	–	–	109,2	–	68	40	87	148	153	2,1	1
	3	1,1	144,3	–	–	123,1	–	78	40	91	174	181	2,5	1
80	0,6	0,3	92	–	–	88	–	42,8	40	85,2	96,8	98	0,6	0,3
	2	1	117,2	–	–	102,9	–	59	40	91	129	134,4	2	1
	2	1	117,2	–	–	102,9	–	59	40	91	129	134,4	2	1
	2,1	1,1	136,7	–	–	115,7	–	72	40	92	158	163	2,1	1
	2,1	1,1	136,7	–	–	115,7	–	72	40	92	158	163	2,1	1
	3	1,1	153,9	–	–	129	–	83	40	96	184	191	2,5	1

Angular contact ball bearings

Single row

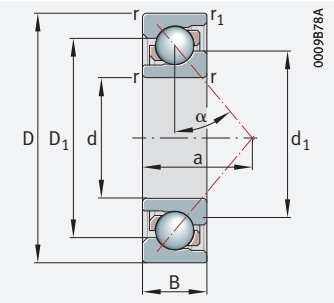

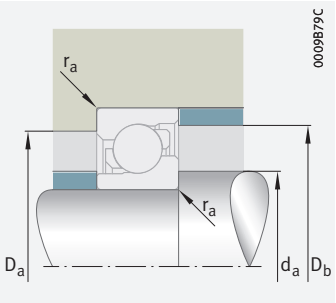

Mounting dimensions

d = 85 – 180 mm

Main dimensions			Basic load ratings		Fatigue limit load	Limiting speed	Speed rating	Mass	Designation
d	D	B	dyn. C_r	stat. C_{0r}	C_{ur}	n_G	$n_{\vartheta r}$	m	➤297 | 1.12 ➤297 | 1.13 X-life ➤289
			N	N	N	min^{-1}	min^{-1}	≈ kg	
85	150	28	97 000	86 000	5 500	5 400	4 750	1,94	**7217-B-XL-JP**
	150	28	97 000	86 000	5 500	5 400	4 750	1,82	**7217-B-XL-TVP**
	180	41	167 000	138 000	8 300	4 450	4 100	4,4	**7317-B-XL-JP**
	180	41	167 000	138 000	8 300	4 450	4 100	4,26	**7317-B-XL-TVP**
90	160	30	114 000	98 000	6 100	5 000	4 550	2,38	**7218-B-XL-JP**
	160	30	114 000	98 000	6 100	5 000	4 550	2,21	**7218-B-XL-TVP**
	190	43	180 000	155 000	9 100	4 200	3 900	5,14	**7318-B-XL-JP**
	190	43	180 000	155 000	9 100	4 200	3 900	5	**7318-B-XL-TVP**
95	170	32	123 000	106 000	6 400	4 700	4 450	2,64	**7219-B-XL-TVP**
	200	45	189 000	167 000	9 600	4 000	3 800	5,93	**7319-B-XL-JP**
	200	45	189 000	167 000	9 600	4 000	3 800	5,78	**7319-B-XL-TVP**
100	180	34	148 000	132 000	7 800	4 400	4 200	3,45	**7220-B-XL-JP**
	180	34	142 000	124 000	7 300	4 400	4 250	3,17	**7220-B-XL-TVP**
	215	47	214 000	197 000	10 900	3 700	3 550	7,38	**7320-B-XL-JP**
	215	47	214 000	197 000	10 900	3 700	3 550	7,16	**7320-B-XL-TVP**
105	190	36	155 000	142 000	8 100	5 400	4 100	4,18	**7221-B-XL-MP**
	225	49	225 000	214 000	11 500	4 600	3 400	9,3	**7321-B-XL-MP**
110	200	38	167 000	154 000	8 600	3 950	3 950	4,7	**7222-B-XL-JP**
	200	38	167 000	154 000	8 600	3 950	3 950	4,44	**7222-B-XL-TVP**
	240	50	250 000	245 000	12 800	3 300	3 150	9,97	**7322-B-XL-JP**
	240	50	250 000	245 000	12 800	3 300	3 150	9,74	**7322-B-XL-TVP**
120	215	40	182 000	178 000	9 600	3 650	3 700	5,4	**7224-B-XL-TVP**
	260	55	275 000	285 000	14 300	3 050	2 850	12,5	**7324-B-XL-TVP**
130	230	40	200 000	204 000	10 600	3 400	3 350	6,12	**7226-B-XL-TVP**
	280	58	305 000	325 000	15 900	2 800	2 600	15,1	**7326-B-XL-TVP**
140	250	42	214 000	231 000	11 500	4 050	3 100	8,55	**7228-B-XL-MP**
	300	62	310 000	375 000	13 100	3 350	2 400	20,5	**7328-B-MP**
150	270	45	245 000	275 000	13 200	3 750	2 850	10,9	**7230-B-XL-MP**
	320	65	340 000	430 000	14 600	3 150	2 200	24,8	**7330-B-MP**
160	290	48	241 000	305 000	10 700	3 500	2 650	13,5	**7232-B-MP**
170	310	52	270 000	355 000	11 900	3 250	2 440	16,7	**7234-B-MP**
180	320	52	280 000	380 000	12 500	3 100	2 290	17,5	**7236-B-MP**

medias *https://www.schaeffler.de/std/1F9A*

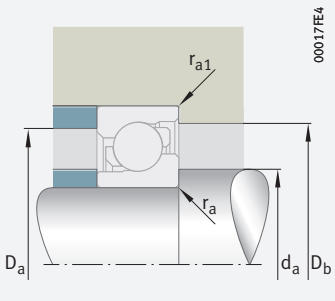

Mounting dimensions

Dimensions						Nominal contact angle	Mounting dimensions				
d	r	r_1	D_1	d_1	a	α	d_a	D_a	D_b	r_a	r_{a1}
	min.	min.	≈	≈	≈	°	min.	max.	max.	max.	max.
85	2	1	125	110,6	63	40	96	139	144,4	2	1
	2	1	125	110,6	63	40	96	139	144,4	2	1
	3	1,1	144	122	76	40	99	166	173	2,5	1
	3	1,1	144	122	76	40	99	166	173	2,5	1
90	2	1	133,4	117,5	67	40	101	149	154,4	2	1
	2	1	133,4	117,5	67	40	101	149	154,4	2	1
	3	1,1	152,4	130,1	80	40	104	176	183	2,5	1
	3	1,1	152,4	130,1	80	40	104	176	183	2,5	1
95	2,1	1,1	141,5	125,3	72	40	107	158	163	2,1	1
	3	1,1	159,5	137,1	84	40	109	186	193	2,5	1
	3	1,1	159,5	137,1	84	40	109	186	193	2,5	1
100	2,1	1,1	149,6	132,3	76	40	112	168	173	2,1	1
	2,1	1,1	149,6	132,3	76	40	112	168	173	2,1	1
	3	1,1	171,7	146,3	90	40	114	201	208	2,5	1
	3	1,1	171,7	146,3	90	40	114	201	208	2,5	1
105	2,1	1,1	157,7	138,2	80	40	117	178	183	2,1	1
	3	1,1	178,9	154	94	40	119	211	218	2,5	1
110	2,1	1,1	165,7	144,9	84	40	122	188	193	2,1	1
	2,1	1,1	165,7	144,9	84	40	122	188	193	2,1	1
	3	1,1	190,9	162,3	98	40	124	226	233	2,5	1
	3	1,1	190,9	162,3	98	40	124	226	233	2,5	1
120	2,1	1,1	178,9	157,2	90	40	132	203	208	2,1	1
	3	1,1	207,1	176,4	107	40	134	246	253	2,5	1
130	3	1,1	191,8	169,6	96	40	144	216	223	2,5	1
	4	1,5	222,5	188,5	115	40	147	263	271	3	1,5
140	3	1,1	207,5	183,5	103	40	154	236	243	2,5	1
	4	1,5	239,5	204,4	123	40	157	283	291	3	1,5
150	3	1,1	223,5	197,5	111	40	164	256	263	2,5	1
	4	1,5	255,8	218,3	131	40	167	303	311	3	1,5
160	3	1,1	238	212	118	40	174	276	283	2,5	1
170	4	1,5	255,8	227,4	127	40	187	293	301	3	1,5
180	4	1,5	265,8	237,4	131	40	197	303	311	3	1,5

2 Double row angular contact ball bearings

Double row angular contact ball bearings are particularly suitable where:

- the design envelope is not sufficient under high loads for a pair of single row angular contact ball bearings
- high radial and axial loads are acting simultaneously
- tilting moments must also be supported
- a relatively rigid bearing arrangement is required
- the bearing arrangement is to run quietly in addition to meeting the requirements stated above

For an overview of other product-specific features, see the Matrix for bearing preselection ➤*284*.

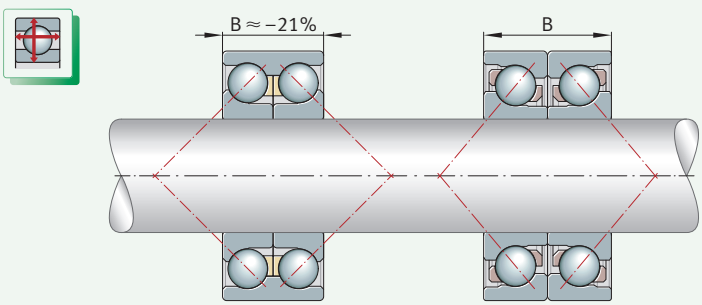

1 *Double row angular contact ball bearing – comparison of design envelope with bearing set composed of single row angular contact ball bearings*

B = *total width of bearing or bearing set*

2.1 Bearing design

✎ *Design variants*

Double row angular contact ball bearings are available as:

- bearings of basic design ➤*319*|*2*
- bearings with filling slot ➤*319*|*3*
- bearings with split inner ring ➤*320*|*4*
- X-life bearings ➤*320*

Larger catalogue bearings and other bearing designs GL 1.

Bearings of basic design

✎ *Comparable with a pair of single row angular contact ball bearings*

Double row bearings correspond in their structure to a pair of single row angular contact ball bearings in an O arrangement, but they are narrower to a certain extent. They differ in the size of the contact angle α and the design of the bearing rings. Due to the manufacturing processes used, open bearings, which are also available with sealing washers or sealing shields, can have turned recesses in the outer and/or inner ring for sealing washers or sealing shields.

✎ *Extensive and versatile range of product variants*

Bearings of series 38..-B(-2RSR, -2Z), 30..-B(-2RSR, -2Z), 32..-B(-2RSR, -2Z), 32..-BD(-2HRS), 33..-B(-2RSR, -2Z), 33..BD(-2HRS) are self-retaining. They do not have filling slots in the end faces of the bearings rings ➤*319*|*2*. Bearings of series 32..-BD and 33..-BD have an optimised internal construction.

In design terms, double row angular contact ball bearings thus fulfil the requirements for:

- supporting axial loads in both directions and high radial loads
- low-noise running
- versatile application

✎ *Nominal contact angle $\alpha = 25°$ or $30°$*

The nominal contact angle α in B designs is 25°, in the case of the BD variant, this is 30°.

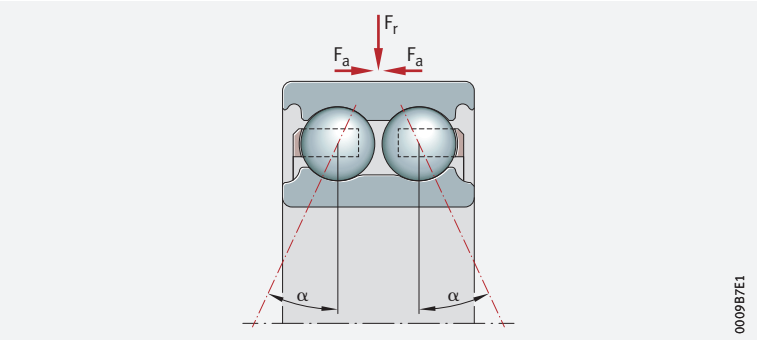

2 *Double row angular contact ball bearing of basic design*

F_r = *radial load*
F_a = *axial load*
α = *nominal contact angle*

Bearings with filling slot

✎ *Nominal contact angle $\alpha = 35°$*

Angular contact ball bearings of series 32 and 33 are self-retaining. They have filling slots on one end face of the bearing ring for filling the bearings with rolling elements ➤*319*| 3. The nominal contact angle is $\alpha = 35°$.

These series must be fitted such that the main load direction is supported by the row of balls without filling slots under axial load.

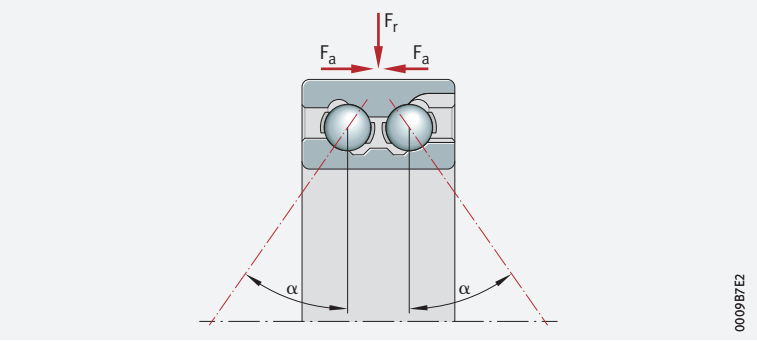

3 *Double row angular contact ball bearing with filling slot*

F_r = *radial load*
F_a = *axial load*
α = *nominal contact angle*

Bearings with split inner ring

✎ *Nominal contact angle $\alpha = 45°$*

In angular contact ball bearings of series 33..-DA, the inner ring is split ➤*320*| 4. The inner rings are not self-retaining. Filling the bearings with a large number of balls – in conjunction with the internal design of the bearing and the contact angle of 45° – allows high alternating axial loads to be supported.

The inner ring halves are matched to the particular bearing and must not be interchanged with those of other bearings of the same size.

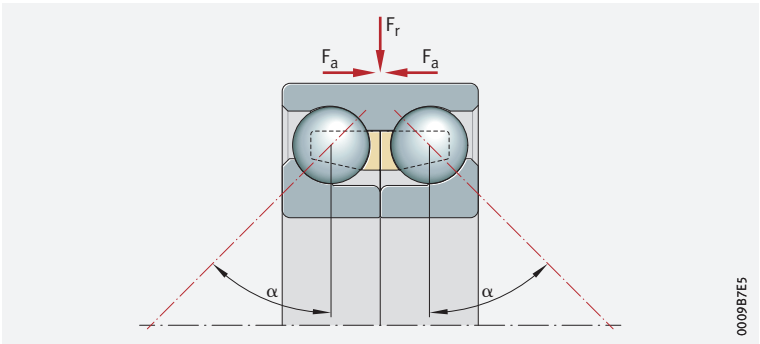

4
Double row angular contact ball bearing with split inner ring

F_r = *radial load*
F_a = *axial load*
α = *nominal contact angle*

X-life premium quality

Bearings of series 32..-BD and 33..-BD are X-life bearings ➤*334*. These bearings exhibit considerably higher performance than standard double row angular contact ball bearings ➤*320*| *5*. This is achieved, for example, through the modified internal construction, higher surface quality of the contact surfaces and optimised cage design, as well as through the improved quality of the steel and rolling elements.

Advantages

Increased customer benefits due to X-life

The technical enhancements offer a range of advantages, such as:

- a more favourable load distribution in the bearing and thus a higher dynamic load carrying capacity of the bearings ➤*320*| *5*
- quieter running
- running with reduced friction and greater energy efficiency
- lower heat generation in the bearing
- higher possible speeds
- lower lubricant consumption and, consequently, longer maintenance intervals
- a measurably longer operating life of the bearings
- high operational security
- compact, environmentally-friendly bearing arrangements

Lower operating costs, higher machine availability

In conclusion, these advantages improve the overall cost-efficiency of the bearing position significantly and thus bring about a sustainable increase in the efficiency of the machine and equipment.

Suffix XL

X-life angular contact ball bearings include the suffix XL in the designation ➤*327*| *7*, ➤*327*| *8* and ➤*334*|.

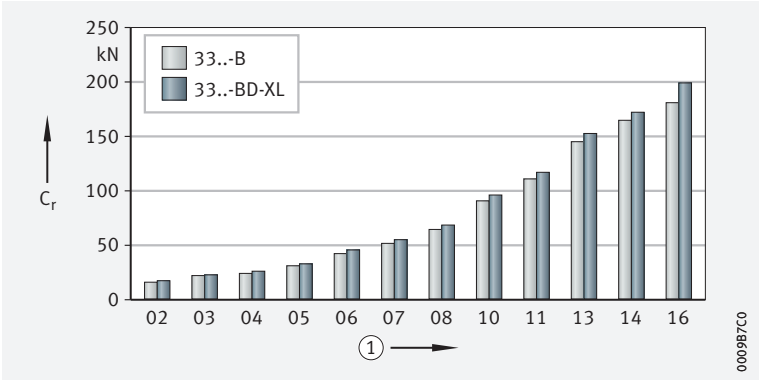

5
Comparison of basic dynamic load rating C_r – bearing series 33..-BD-XL, bore code 02 to 16, with a bearing which is not of X-life quality (33..-B)

C_r = *basic dynamic load rating*
① *Bore code*

Areas of application

✎ *Wide application range*

Due to their special technical features, double row X-life angular contact ball bearings are highly suitable for bearing arrangements in:

- compressors
- fluid and hydraulic pumps
- automotive chassis and gearboxes
- industrial gearboxes
- agricultural vehicles
- elevators and packaging equipment
- heavy motorbikes
- machine tools
- textile machinery

X-life indicates a high product performance density and thus a particularly significant benefit to the customer. Further information on X-life ➤*10*.

2.2 Load carrying capacity

✎ *Capable of supporting axial loads in both directions and radial loads*

In addition to high radial loads, double row angular contact ball bearings can also support axial forces in both directions and tilting moments ➤*319*|*2*. They are highly suitable for bearing arrangements with rigid axial guidance.

✎ *Contact angle and axial load carrying capacity*

The bearings are available with α = 25°, 30°, 35° and 45° ➤*319*|*2* to ➤*320*|*4*. The axial load carrying capacity increases with the size of the contact angle. In bearings without filling slots, it is the same in both directions.

2.3 Compensation of angular misalignments

✎ *The angular adjustment facility is very limited*

The bearings are not suitable for the compensation of angular misalignments. In addition, misalignments induce internal forces, which not only lead to higher temperatures, but also to a reduction in the bearing rating life.

2.4 Lubrication

✎ *Angular contact ball bearings sealed on both sides are maintenance-free*

Open bearings and bearings with seals on both sides are greased using a high quality grease. Bearings sealed on both sides are maintenance-free for many applications, i.e. they do not require relubrication.

✎ *Open bearings must be lubricated*

Angular contact ball bearings without seals and with seals on one side of series 32.., 33.., 33..-DA, 32..-BD and 33..-BD are preserved and not greased. These bearings must be lubricated with oil or grease.

✎ *Compatibility with plastic cages*

When using bearings with plastic cages, compatibility between the lubricant and the cage material must be ensured if synthetic oils, lubricating greases with a synthetic oil base or lubricants containing a high proportion of EP additives are used.

✎ *Observe oil change intervals*

Aged oil and additives in the oil can impair the operating life of plastics at high temperatures. As a result, stipulated oil change intervals must be strictly observed.

2.5 Sealing

✎ *2RS, 2RSR and 2HRS seals are contact designs*

Series 38..-B, 30..-B, 32..-B and 33..-B with the suffix 2RS, 2RSR and 2HRS have lip seals in axial contact on both sides and in radial contact ➤*326*|*5*. Bearings with the suffix RS, HRS and RSR are sealed on one side with lip seals in axial and radial contact.

✎ *2Z sealing shields and 2RZ seals are non-contact designs*

Bearing series with the suffix 2Z have sheet steel sealing shields on both sides. Bearings with the suffix 2RZ are fitted with rubberised gap seals on both sides.

✎ *Open bearings*

In the case of unsealed bearings, sealing must be carried out by the adjacent construction. The sealing system should reliably prevent:

- moisture and contaminants from entering the bearing
- the egress of lubricant from the bearing

2.6 Speeds

✎ *Speeds in the product tables*

The product tables generally give two speeds for the bearings:

- the kinematic limiting speed n_G
- the thermal speed rating $n_{\vartheta r}$

Limiting speeds

The limiting speed n_G is the kinematically permissible speed of the bearing. Even under favourable mounting and operating conditions, this value should not be exceeded without prior consultation with Schaeffler ➤*64*.

The values given in the product tables are valid for oil lubrication in the case of bearings without seals or shields and for grease lubrication where bearings are supplied greased and with seals or shields.

Bearings with solid brass cages have a significantly higher limiting speed for oil lubrication.

✎ *Values for grease lubrication*

For the grease lubrication of bearings without seals or shields, 75% of the value stated in the product tables is permissible in each case.

For the grease lubrication of bearings with solid brass cages, 58% of the value stated in the product tables is permissible in each case.

Reference speeds

✎ $n_{\vartheta r}$ *is used to calculate* n_ϑ

The thermal speed rating $n_{\vartheta r}$ is not an application-oriented speed limit, but is a calculated ancillary value for determining the thermally safe operating speed n_ϑ ➤*64*.

✎ *Bearings with contact seals*

For bearings with contact seals, no reference speeds are defined in accordance with DIN ISO 15312:2004. As a result, only the limiting speed n_G is given in the product tables for these bearings.

2.7 Noise

The Schaeffler Noise Index (SGI) has been developed as a new feature for comparing the noise level of different bearing types and series. As a result, a noise evaluation of rolling bearings can now be carried out for the first time.

Schaeffler Noise Index

The SGI value is based on the maximum permissible noise level of a bearing in accordance with internal standards, which is calculated on the basis of ISO 15242. In order that different bearing types and series can be compared, the SGI value is plotted against the basic static load rating C_0.

This permits direct comparisons between bearings with the same load carrying capacity. The upper limit value is given in each of the diagrams. This means that the average noise level of the bearings is lower than illustrated in the diagram.

The Schaeffler Noise Index is an additional performance characteristic in the selection of bearings for noise-sensitive applications. The specific suitability of a bearing for an application in terms of installation space, load carrying capacity or speed limit for example, must be checked independently of this.

The Noise Index is currently available for the main series. Additional series will be updated and introduced in subsequent publications.

Further information:

- ***medias*** *https://medias.schaeffler.com*

6
Schaeffler Noise Index for double row angular contact ball bearings

SGI = *Schaeffler Noise Index*
C_0 = *basic static load rating*

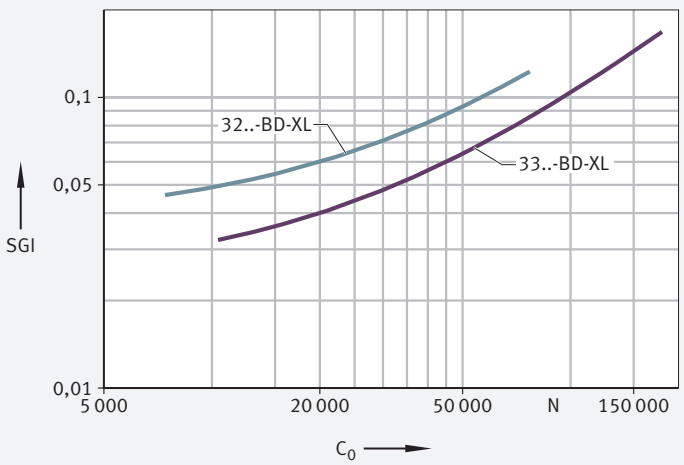

2.8 Temperature range

Limiting values

The operating temperature of the bearings is limited by:
- the dimensional stability of the bearing rings and rolling elements
- the cage
- the lubricant
- the seals

Possible operating temperatures of double row angular contact ball bearings ➤*323*| *1*.

1
Permissible temperature ranges

Operating temperature	Double row angular contact ball bearings, open		Double row angular contact ball bearings, sealed
	with sheet steel or brass cage	with polyamide cage PA66	
	ungreased –30 °C to +150 °C	–30 °C to +120 °C, limited by the cage material	–30 °C to +110 °C, limited by the lubricant and seal material
	series 30, 38, 32..-BD and 33..-BD, D ≦ 90 mm, –30 °C to +120 °C		

In the event of anticipated temperatures which lie outside the stated values, please contact Schaeffler.

2.9 Cages

✎ Solid cages made from brass and PA66, as well as sheet steel cages, are used as standard

Standard cages and additional cage designs for double row angular contact ball bearings are made from brass, polyamide or steel ➤ *324* | ▦ *2*. Other cages are available by agreement. With such cages, however, suitability for high speeds and temperatures as well as the basic load ratings may differ from the values for the bearings with standard cages.

For high continuous temperatures and applications with difficult operating conditions, bearings with brass or sheet steel cages should be used. If there is any uncertainty regarding cage suitability, please consult Schaeffler.

▦ **2**
Cage, cage suffix, bore code

Bearing series	Solid cage made from polyamide PA66 TVH, TVP		Solid brass cage M, MA		Sheet steel cage –	
	standard	also available for	standard	also available for	standard	also available for
	Bore code					
32	–	–	19, 21, 22	18, 20	17, 18, 20	–
33	–	–	17, 19, 20, 22	18	14 to 16, 18	20
30..-B	up to 08	–	–	–	–	–
32..-B	00, 01, 14 to 18, 20	–	–	–	–	–
33..-B	01, 12	–	–	–	–	–
38..-B	00 to 12, 14, 16, 18, 20	–	–	–	–	–
32..-BD	–	02 to 13	–	–	02 to 13	–
33..-BD	–	02 to 11, 13, 14, 16	–	–	04 to 11, 13, 14	–
33..-DA	05	–	08, 10, 11, 15 to 22	05, 06, 07, 09, 12, 13, 14	06, 07, 09, 12, 13, 14	05

2.10 Internal clearance

Axial internal clearance – bearings with unsplit inner ring

Double row angular contact ball bearings with unsplit inner ring of the basic design have the axial internal clearance CN (group N) in accordance with DIN 628-3:2008 ➤ *325* | ▦ *3*.

Bearings can also be supplied with an axial internal clearance which is larger or smaller than CN (C3, C4 or C2). In this case, please contact Schaeffler.

3
Axial internal clearance of double row angular contact ball bearings with unsplit inner ring

Nominal bore diameter d mm		Axial internal clearance							
		C2 (Group 2) µm		CN (Group N) µm		C3 (Group 3) µm		C4 (Group 4) µm	
over	incl.	min.	max.	min.	max.	min.	max.	min.	max.
–	10	1	11	5	21	12	28	25	45
10	18	1	12	6	23	13	31	27	47
18	24	2	14	7	25	16	34	27	47
24	30	2	15	8	27	18	37	30	50
30	40	2	16	9	29	21	40	33	54
40	50	2	18	11	33	23	44	36	58
50	65	3	22	13	36	26	48	40	63
65	80	3	24	15	40	30	54	46	71
80	100	3	26	18	46	35	63	55	83
100	120	4	30	22	53	42	73	65	96
120	140	4	34	25	59	48	82	74	108

Axial internal clearance – bearings with split inner ring

✎ Standard corresponds approximately to C3 for unsplit bearings

Bearings with a split inner ring are intended for higher axial loads. As a result, they generally also have a tighter fit than unsplit bearings. Their normal internal clearance corresponds approximately to the internal clearance group C3 for unsplit bearings ➤325|▦4.

4
Axial internal clearance of double row angular contact ball bearings with split inner ring

Nominal bore diameter d mm		Axial internal clearance					
		C2 (Group 2) µm		CN (Group N) µm		C3 (Group 3) µm	
over	incl.	min.	max.	min.	max.	min.	max.
24	30	8	27	16	35	27	46
30	40	9	29	18	38	30	50
40	50	11	33	22	44	36	58
50	65	13	36	25	48	40	63
65	80	15	40	29	54	46	71

2.11 Dimensions, tolerances

Dimension standards

DIN ISO

The main dimensions of double row angular contact ball bearings correspond to DIN 628-3:2008. Nominal dimensions of double row angular contact ball bearings ➤334|▦.

Chamfer dimensions

DIN ISO

The limiting dimensions for chamfer dimensions correspond to DIN 620-6:2004. Overview and limiting values ➤137|7.11. Nominal value of chamfer dimension ➤334|▦.

Tolerances

DIN ISO

The tolerances for the dimensional and running accuracy of double row angular contact ball bearings correspond to tolerance class Normal in accordance with ISO 492:2014; the dimensional and running tolerances of bearings with the suffix BD correspond to the tolerance class 6 in accordance with ISO 492:2014. Tolerance values in accordance with ISO 492 ➤124|▦8 and ➤126|▦11.

2.12 Suffixes

Suffixes describe the design and features of a bearing in more detail.

5 *Suffixes and corresponding descriptions*

Suffix	Description of suffix	
B	Modified internal construction, nominal contact angle $\alpha = 25°$, without filling slot	Standard
BD	Modified internal construction, nominal contact angle $\alpha = 30°$, without filling slot	
C2	Axial internal clearance C2 (smaller than normal)	Available by agreement
C3	Axial internal clearance C3 (larger than normal)	
C4	Axial internal clearance C4 (larger than C3)	
DA	Inner ring split, nominal contact angle $\alpha = 45°$	Standard
M	Solid brass cage, ball-guided	Standard, dependent on bore code
MA	Solid brass cage, guided on outer ring	
TVH	Solid cage made from glass fibre reinforced polyamide PA66, ball-guided	
2HRS	Contact seal on both sides, axial contact (lip seal)	Standard
2RS	Contact seal on both sides, axial contact (lip seal)	
2RSR	Contact seal on both sides, radial contact (lip seal)	
2RZ	Non-contact seal on both sides (rubberised gap seal)	
2Z	Non-contact sealing shield on both sides (sheet metal gap seal)	
HRS	Contact seal on one side, axial contact (lip seal)	Special design, available by agreement
RS	Contact seal on one side, axial contact (lip seal)	
RSR	Contact seal on one side, radial contact (lip seal)	
RZ	Non-contact seal on one side (rubberised gap seal)	
Z	Non-contact sealing shield on one side (sheet metal gap seal)	
XL	X-life bearing, dependent on bore code and bearing type	

2.13 Structure of bearing designation

With ***medias*** interchange, equivalent Schaeffler bearing designations can be determined for bearing designations from other rolling bearing manufacturers *https://www.schaeffler.de/std/1B69*.

Examples of composition of bearing designation

The designation of bearings follows a set model. Examples ➤*327*|*7* and ➤*327*|*8*. The composition of designations is subject to DIN 623-1 ➤*102*|*10*.

7
Double row angular contact ball bearing of basic design: designation structure

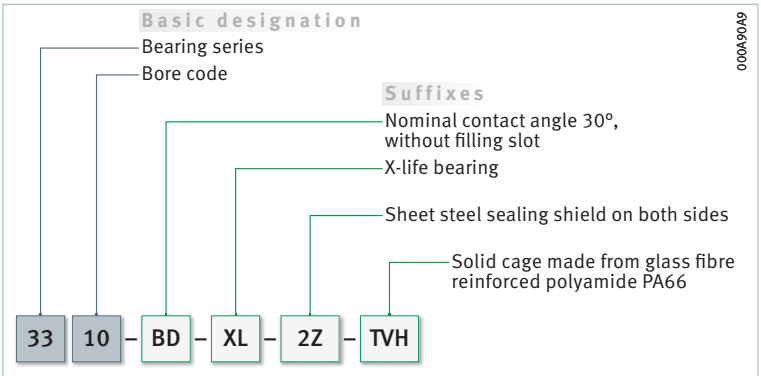

8
Double row angular contact ball bearing with split inner ring: designation structure

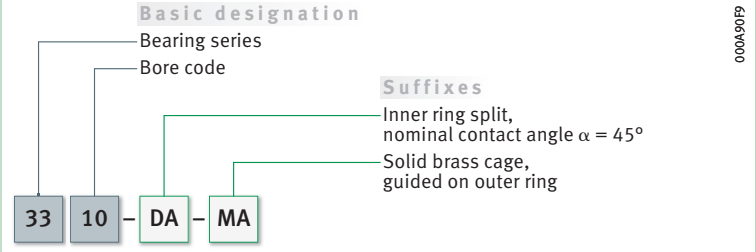

2.14 Dimensioning

Equivalent dynamic bearing load

Valid for α = 25°, 30°, 35°, 45°

The calculation of P is dependent on the nominal contact angle α of the bearing, the load ratio F_a/F_r and the calculation factors from ➤*327*|*1* to ➤*328*|*8*.

The further fundamental information on the calculation of the equivalent dynamic bearing load must be observed ➤*298*|*1.14*.

1
Equivalent dynamic load α = 25°

$$\frac{F_a}{F_r} \leqq 0{,}68 \quad \Rightarrow \quad P = F_r + 0{,}92 \cdot F_a$$

2
Equivalent dynamic load α = 25°

$$\frac{F_a}{F_r} > 0{,}68 \quad \Rightarrow \quad P = 0{,}67 \cdot F_r + 1{,}41 \cdot F_a$$

3
Equivalent dynamic load α = 30°

$$\frac{F_a}{F_r} \leqq 0{,}8 \quad \Rightarrow \quad P = F_r + 0{,}78 \cdot F_a$$

4
Equivalent dynamic load α = 30°

$$\frac{F_a}{F_r} > 0{,}8 \quad \Rightarrow \quad P = 0{,}63 \cdot F_r + 1{,}24 \cdot F_a$$

Equivalent dynamic load
$\alpha = 35°$

$$\frac{F_a}{F_r} \leqq 0{,}95 \quad \Rightarrow \quad P = F_r + 0{,}66 \cdot F_a \qquad (5)$$

Equivalent dynamic load
$\alpha = 35°$

$$\frac{F_a}{F_r} > 0{,}95 \quad \Rightarrow \quad P = 0{,}6 \cdot F_r + 1{,}07 \cdot F_a \qquad (6)$$

Equivalent dynamic load
$\alpha = 45°$

$$\frac{F_a}{F_r} \leqq 1{,}34 \quad \Rightarrow \quad P = F_r + 0{,}47 \cdot F_a \qquad (7)$$

Equivalent dynamic load
$\alpha = 45°$

$$\frac{F_a}{F_r} > 1{,}34 \quad \Rightarrow \quad P = 0{,}54 \cdot F_r + 0{,}81 \cdot F_a \qquad (8)$$

Legend

P	N	Equivalent dynamic bearing load
F_r	N	Radial load
F_a	N	Axial load.

Equivalent static bearing load

✎ *Valid for* $\alpha = 25°, 30°, 35°, 45°$

The calculation of the equivalent static bearing load P_0 is dependent on the nominal contact angle α and the calculation factors ➤*328*| *9* to ➤*328*| *12*.

Equivalent static load
$\alpha = 25°$

$$P_0 = F_{0r} + 0{,}76 \cdot F_{0a} \qquad (9)$$

Equivalent static load
$\alpha = 30°$

$$P_0 = F_{0r} + 0{,}66 \cdot F_{0a} \qquad (10)$$

Equivalent static load
$\alpha = 35°$

$$P_0 = F_{0r} + 0{,}58 \cdot F_{0a} \qquad (11)$$

Equivalent static load
$\alpha = 45°$

$$P_0 = F_{0r} + 0{,}44 \cdot F_{0a} \qquad (12)$$

Legend

P_0	N	Equivalent static bearing load
F_{0r}, F_{0a}	N	Largest radial or axial load present (maximum load).

Static load safety factor

✎ $S_0 = C_0/P_0$

In addition to the basic rating life L (L_{10h}), it is also always necessary to check the static load safety factor S_0 ➤*328*| *13*.

Static load safety factor

$$S_0 = \frac{C_0}{P_0} \qquad (13)$$

Legend

S_0	–	Static load safety factor
C_0	N	Basic static load rating
P_0	N	Equivalent static bearing load.

2.15 Minimum load

✎ *In order to prevent damage due to slippage, a minimum radial load of $P > C_{0r}/100$ is required*

In order that no slippage occurs between the contact partners, the double row angular contact ball bearings must be constantly subjected to a sufficiently high load. Based on experience, a minimum radial load of the order of $P > C_{0r}/100$ is thus necessary. In most cases, however, the radial load is already higher than the requisite minimum load due to the weight of the supported parts and the external forces.

If the minimum radial load is lower than indicated above, please consult Schaeffler.

2.16 Design of bearing arrangements

✎ *Support bearing rings over their entire circumference and width*

In order to allow full utilisation of the load carrying capacity of the bearings and thus also achieve the requisite rating life, the bearing rings must be rigidly and uniformly supported by means of contact surfaces over their entire circumference and over the entire width of the raceway. Support can be provided by means of a cylindrical seating surface. The seating and contact surfaces should not be interrupted by grooves, holes or other recesses. The accuracy of mating parts must meet specific requirements ➤*330*|▦*6* to ➤*331*|▦*8*.

Radial location of bearings – fit recommendations

✎ *For secure radial location, tight fits are necessary*

In addition to supporting the rings adequately, the bearings must also be securely located in a radial direction, to prevent creep of the bearing rings on the mating parts under load. This is generally achieved by means of tight fits between the bearing rings and the mating parts. If the rings are not secured adequately or correctly, this can cause severe damage to the bearings and adjacent machine parts. Influencing factors, such as the conditions of rotation, magnitude of the load, internal clearance, temperature conditions, design of the mating parts and the mounting and dismounting options must be taken into consideration in the selection of fits.

If shock type loads occur, tight fits (transition fit or interference fit) are required to prevent the rings from coming loose at any point. Clearance, transition or interference fits ➤*152*|▦*6* and ➤*160*|▦*7*.

The following information provided in Technical principles must be taken into consideration in the design of bearing arrangements:

- criteria for selection of fits ➤*146*
- conditions of rotation ➤*147*
- tolerance classes for cylindrical shaft seats (radial bearings) ➤*149*|▦*2*
- shaft fits ➤*152*|▦*6*
- tolerance classes for bearing seats in housings (radial bearings) ➤*150*|▦*4*
- housing fits ➤*160*|▦*7*

Axial location of bearings – location methods

✎ *The bearings must also be securely located in an axial direction*

As a tight fit alone is not normally sufficient to also locate the bearing rings securely on the shaft and in the housing bore in an axial direction, this must usually be achieved by means of an additional axial location or retention method. The axial location of the bearing rings must be matched to the type of bearing arrangement. Shaft and housing shoulders, housing covers, nuts, spacer rings and retaining rings etc., are fundamentally suitable.

Dimensional, geometrical and running accuracy of the bearing seats

✎ For bearings with tolerance class Normal, a minimum of IT6 should be provided for the shaft seat and a minimum of IT7 for the housing seat

The accuracy of the bearing seat on the shaft and in the housing should correspond to the accuracy of the bearing used. For double row angular contact ball bearings with the tolerance class Normal, the shaft seat should correspond to a minimum of standard tolerance grade IT6 and the housing seat to a minimum of IT7; with tolerance class 6, the shaft seat should correspond to a minimum of IT5 and the housing seat to a minimum of IT6. Guide values for the geometrical and positional tolerances of bearing seating surfaces ➤ *330* | ▦ *6*. Tolerances t_1 to t_3 in accordance with ➤ *170* | ⧉ *11*. Numerical values for IT grades ➤ *330* | ▦ *7*.

▦ 6
Guide values for the geometrical and positional tolerances of bearing seating surfaces

Bearing tolerance class		Bearing seating surface	Standard tolerance grades to ISO 286-1 (IT grades)			
to ISO 492	to DIN 620		Diameter tolerance	Roundness tolerance t_1	Parallelism tolerance t_2	Total axial runout tolerance of abutment shoulder t_3
Normal	PN (P0)	Shaft	IT6 (IT5)	Circumferential load IT4/2	Circumferential load IT4/2	IT4
				Point load IT5/2	Point load IT5/2	
		Housing	IT7 (IT6)	Circumferential load IT5/2	Circumferential load IT5/2	IT5
				Point load IT6/2	Point load IT6/2	
6	P6	Shaft	IT5	Circumferential load IT3/2	Circumferential load IT3/2	IT3
				Point load IT4/2	Point load IT4/2	
		Housing	IT6	Circumferential load IT4/2	Circumferential load IT4/2	IT4
				Point load IT5/2	Point load IT5/2	

▦ 7
Numerical values for ISO standard tolerances (IT grades) to ISO 286-1:2010

IT grade	Nominal dimension in mm							
	over 3	6	10	18	30	50	80	120
	incl. 6	10	18	30	50	80	120	180
	Values in µm							
IT3	2,5	2,5	3	4	4	5	6	8
IT4	4	4	5	6	7	8	10	12
IT5	5	6	8	9	11	13	15	18
IT6	8	9	11	13	16	19	22	25
IT7	12	15	18	21	25	30	35	40

Roughness of cylindrical bearing seats

✎ Ra must not be too high

The roughness of the bearing seats must be matched to the tolerance class of the bearings. The mean roughness value Ra must not be too high, in order to maintain the interference loss within limits. The shafts must be ground, while the bores must be precision turned. Guide values as a function of the IT grade of bearing seating surfaces ➤ *331* | ▦ *8*.

8
Roughness values for cylindrical bearing seating surfaces – guide values

Nominal diameter of the bearing seat d (D) mm		Recommended mean roughness value for ground bearing seats Ramax µm			
		Diameter tolerance (IT grade)			
over	incl.	IT7	IT6	IT5	IT4
–	80	1,6	0,8	0,4	0,2
80	500	1,6	1,6	0,8	0,4

Mounting dimensions for the contact surfaces of bearing rings

The contact surfaces for the rings must be of sufficient height

The mounting dimensions of the shaft and housing shoulders, and spacer rings etc., must ensure that the contact surfaces for the bearing rings are of sufficient height. However, they must also reliably prevent rotating parts of the bearing from grazing stationary parts. Proven mounting dimensions for the radii and diameters of abutment shoulders ➤*334*. These dimensions are limiting dimensions (maximum or minimum dimensions); the actual values should not be higher or lower than specified.

2.17 Mounting and dismounting

The mounting and dismounting options for angular contact ball bearings, by thermal, hydraulic or mechanical methods, must be taken into consideration in the design of the bearing position.

Ensure that the bearings are not damaged during mounting

In the mounting of non-separable (self-retaining) angular contact ball bearings, the mounting forces must always be applied to the bearing ring with a tight fit.

Bearings with split inner ring

Simplified mounting of bearings due to split inner ring

These angular contact ball bearings are not self-retaining. As a result, the outer ring with the ball and cage assembly can be mounted separately from the two inner ring halves. This gives simplified mounting of the bearings.

Schaeffler Mounting Handbook

Rolling bearings must be handled with great care

Rolling bearings are well-proven precision machine elements for the design of economical and reliable bearing arrangements, which offer high operational security. In order that these products can function correctly and achieve the envisaged operating life without detrimental effect, they must be handled with care.

The Schaeffler Mounting Handbook MH 1 gives comprehensive information about the correct storage, mounting, dismounting and maintenance of rotary rolling bearings *https://www.schaeffler.de/std/1D53*.
It also provides information which should be observed by the designer, in relation to the mounting, dismounting and maintenance of bearings, in the original design of the bearing position. This book is available from Schaeffler on request.

2.18 Legal notice regarding data freshness

✎ The further development of products may also result in technical changes to catalogue products

Of central interest to Schaeffler is the further development and optimisation of its products and the satisfaction of its customers. In order that you, as the customer, can keep yourself optimally informed about the progress that is being made here and with regard to the current technical status of the products, we publish any product changes which differ from the printed version in our electronic product catalogue.

§ We therefore reserve the right to make changes to the data and illustrations in this catalogue. This catalogue reflects the status at the time of printing. More recent publications released by us (as printed or digital media) will automatically precede this catalogue if they involve the same subject. Therefore, please always use our electronic product catalogue to check whether more up-to-date information or modification notices exist for your desired product.

Link to electronic product catalogue

The following link will take you to the Schaeffler electronic product catalogue: *https://medias.schaeffler.com*.

2.19 Further information

In addition to the data in this chapter, the following chapters in Technical principles must also be observed in the design of bearing arrangements:

- Determining the bearing size ➤*34*
- Rigidity ➤*54*
- Friction and increases in temperature ➤*56*
- Speeds ➤*64*
- Bearing data ➤*97*
- Lubrication ➤*70*
- Sealing ➤*185*
- Design of bearing arrangements ➤*141*
- Mounting and dismounting ➤*194*



Angular contact ball bearings

Double row

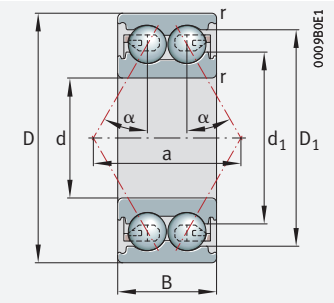

38..-B, 30..-B, 32..-B, 33..-B, 32..-BD, 33..-BD, 32, 33

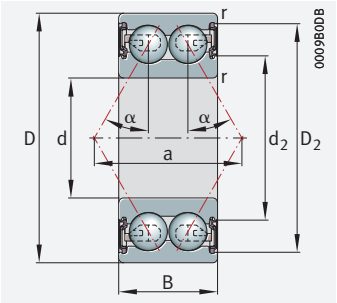

38..-B, 30..-B, 32..-B, 33..-B, 32..-BD, 33..-BD; with seal 2HRS, 2RS, 2RSR, 2RZ, 2Z

d = 5 – 12 mm

Main dimensions			Basic load ratings		Fatigue limit load	Limiting speed	Speed rating	Mass	Designation
d	D	B	dyn. C_r	stat. C_{0r}	C_{ur}	n_G	$n_{\vartheta r}$	m	➤326 | 2.12 ➤327 | 2.13 X-life ➤320
			N	N	N	min^{-1}	min^{-1}	≈ kg	
5	14	7	1 780	940	49	51 000	31 500	0,005	**30/5-B-TVH**
	14	7	1 780	940	49	38 000	31 500	0,006	**30/5-B-2Z-TVH**
	14	7	1 780	940	49	30 500	–	0,006	**30/5-B-2RSR-TVH**
6	17	9	3 050	1 400	74	42 000	32 000	0,011	**30/6-B-TVH**
	17	9	3 050	1 400	74	31 500	32 000	0,011	**30/6-B-2Z-TVH**
	17	9	3 050	1 400	74	28 000	–	0,011	**30/6-B-2RSR-TVH**
7	19	10	3 650	1 690	88	39 500	31 500	0,01	**30/7-B-TVH**
	19	10	3 650	1 690	88	29 500	31 500	0,01	**30/7-B-2Z-TVH**
	19	10	3 650	1 690	88	25 500	–	0,01	**30/7-B-2RSR-TVH**
8	22	11	5 100	2 600	136	34 500	26 000	0,018	**30/8-B-TVH**
	22	11	5 100	2 600	136	26 000	26 000	0,018	**30/8-B-2Z-TVH**
	22	11	5 100	2 600	136	25 500	–	0,018	**30/8-B-2RSR-TVH**
10	19	7	2 080	1 370	72	40 500	21 000	0,008	**3800-B-TVH**
	19	7	2 080	1 370	72	30 500	21 000	0,008	**3800-B-2RZ-TVH**
	19	7	2 080	1 370	72	21 100	–	0,008	**3800-B-2RS-TVH**
	26	12	5 700	3 200	198	31 000	21 900	0,022	**3000-B-TVH**
	26	12	5 700	3 200	166	23 400	21 900	0,022	**3000-B-2RZ-TVH**
	26	12	5 700	3 200	166	18 100	–	0,022	**3000-B-2RS-TVH**
	30	14	7 800	4 450	233	21 100	21 000	0,052	**3200-B-TVH**
	30	14	7 800	4 450	233	21 100	21 000	0,05	**3200-B-2Z-TVH**
	30	14	7 800	4 450	233	16 100	–	0,053	**3200-B-2RS-TVH**
12	21	7	2 150	1 520	79	37 500	18 100	0,009	**3801-B-TVH**
	21	7	2 150	1 520	79	28 000	18 100	0,01	**3801-B-2RZ-TVH**
	21	7	2 150	1 520	79	17 500	–	0,01	**3801-B-2RS-TVH**
	28	12	6 100	3 700	193	29 500	19 300	0,025	**3001-B-TVH**
	28	12	6 100	3 700	193	22 000	19 300	0,032	**3001-B-2RZ-TVH**
	28	12	6 100	3 700	193	15 800	–	0,032	**3001-B-2RS-TVH**
	32	15,9	10 500	5 800	300	18 400	20 000	0,051	**3201-B-TVH**
	32	15,9	10 500	5 800	300	18 400	20 000	0,06	**3201-B-2Z-TVH**
	32	15,9	10 500	5 800	300	15 000	–	0,057	**3201-B-2RS-TVH**
	37	19	14 600	8 300	430	20 400	13 000	0,093	**3301-B-TVH**
	37	19	14 600	8 300	430	15 300	13 000	0,093	**3301-B-2Z-TVH**
	37	19	14 600	8 300	430	14 100	–	0,093	**3301-B-2RS-TVH**

medias *https://www.schaeffler.de/std/1F9A*

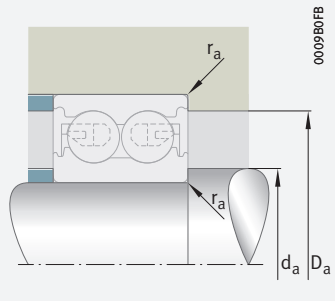

Mounting dimensions

Dimensions							Nominal contact angle	Mounting dimensions		
d	r	D_1	D_2	d_1	d_2	a	α	d_a	D_a	r_a
	min.	≈	≈	≈	≈	≈	°	min.	max.	max.
5	0,2	11,2	–	8,8	–	6,9	25	6,4	12,6	0,2
	0,2	–	12,7	–	8,5	6,9	25	6,4	12,6	0,2
	0,2	–	12,7	–	8,5	6,9	25	6,4	12,6	0,2
6	0,3	13,4	–	9,6	–	8,8	25	8	15	0,3
	0,3	–	14,8	–	8,3	8,8	25	8	15	0,3
	0,3	–	14,8	–	8,3	8,8	25	8	15	0,3
7	0,3	14,6	–	10,4	–	9,6	25	9	17	0,3
	0,3	–	16,5	–	9	9,6	25	9	17	0,3
	0,3	–	16,5	–	9	9,6	25	9	17	0,3
8	0,3	17,6	–	12,6	–	11,2	25	10	20	0,3
	0,3	–	19	–	10,5	11,2	25	10	20	0,3
	0,3	–	19	–	10,5	11,2	25	10	20	0,3
10	0,3	15,9	–	13,3	–	9	25	12	17	0,3
	0,3	–	16,7	–	12,2	9	25	12	17	0,3
	0,3	–	16,7	–	12,2	9	25	12	17	0,3
	0,3	20,6	–	15,8	–	12,6	25	12	24	0,3
	0,3	–	21,2	–	14,2	12,6	25	12	24	0,3
	0,3	–	21,2	–	14,2	12,6	25	12	24	0,3
	0,6	23	–	16,6	–	14,8	25	14,2	25,8	0,6
	0,6	–	24,9	–	15,5	14,8	25	14,2	25,8	0,6
	0,6	–	24,9	–	15,5	14,8	25	14,2	25,8	0,6
12	0,3	18	–	15,3	–	9,9	25	14	19	0,3
	0,3	–	18,9	–	14,2	9,9	25	14	19	0,3
	0,3	–	18,9	–	14,2	9,9	25	14	19	0,3
	0,3	22,5	–	17,6	–	13,5	25	14	26	0,3
	0,3	–	23,2	–	16,4	13,5	25	14	26	0,3
	0,3	–	23,2	–	16,4	13,5	25	14	26	0,3
	0,6	26	–	17,8	–	16,5	25	16,2	27,8	0,6
	0,6	–	27,8	–	17,1	16,5	25	16,2	27,8	0,6
	0,6	–	27,8	–	17,1	16,5	25	16,2	27,8	0,6
	1	30,5	–	21,7	–	19,8	25	17,6	31,4	1
	1	–	32,1	–	18,7	19,8	25	17,6	31,4	1
	1	–	32,1	–	18,7	19,8	25	17,6	31,4	1

Angular contact ball bearings

Double row

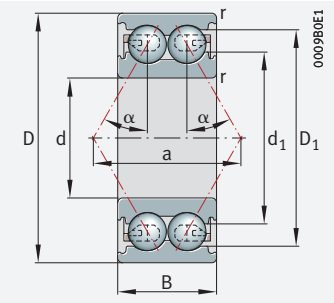

38..-B, 30..-B, 32..-B, 33..-B, 32..-BD, 33..-BD, 32, 33

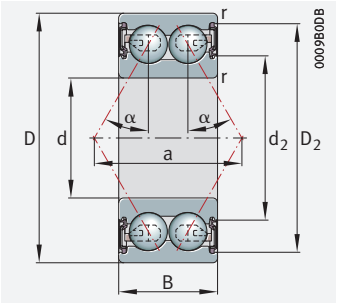

38..-B, 30..-B, 32..-B, 33..-B, 32..-BD, 33..-BD; with seal 2HRS, 2RS, 2RSR, 2RZ, 2Z

d = 15 – 17 mm

Main dimensions			Basic load ratings		Fatigue limit load	Limiting speed	Speed rating	Mass	Designation
d	D	B	dyn. C_r	stat. C_{0r}	C_{ur}	n_G	$n_{\vartheta r}$	m	➤326|2.12 ➤327|2.13 X-life ➤320
			N	N	N	min^{-1}	min^{-1}	≈ kg	
15	24	7	2 080	1 560	81	33 500	14 900	0,01	**3802-B-TVH**
	24	7	2 080	1 560	81	25 000	14 900	0,012	**3802-B-2RZ-TVH**
	24	7	2 080	1 560	81	14 600	–	0,012	**3802-B-2RS-TVH**
	32	13	8 500	5 400	290	23 900	15 700	0,042	**3002-B-TVH**
	32	13	8 500	5 400	290	17 900	15 700	0,05	**3002-B-2RZ-TVH**
	32	13	8 500	5 400	290	13 000	–	0,05	**3002-B-2RS-TVH**
	35	15,9	12 600	7 400	520	22 300	18 500	0,066	**3202-BD-XL-TVH**
	35	15,9	12 600	7 400	520	16 700	18 500	0,065	**3202-BD-XL-2Z-TVH**
	35	15,9	12 600	7 400	520	16 700	–	0,065	**3202-BD-XL-2HRS-TVH**
	42	19	17 000	10 400	720	18 400	12 100	0,124	**3302-BD-XL-TVH**
	42	19	17 000	10 400	720	13 800	12 100	0,122	**3302-BD-XL-2Z-TVH**
	42	19	17 000	10 400	720	13 800	–	0,122	**3302-BD-XL-2HRS-TVH**
17	26	7	2 430	2 020	108	30 500	13 200	0,011	**3803-B-TVH**
	26	7	2 430	2 020	108	23 000	13 200	0,013	**3803-B-2RZ-TVH**
	26	7	2 430	2 020	108	13 200	–	0,013	**3803-B-2RS-TVH**
	35	14	9 100	6 100	315	22 500	15 300	0,042	**3003-B-TVH**
	35	14	9 100	6 100	315	16 800	15 300	0,057	**3003-B-2RZ-TVH**
	35	14	9 100	6 100	315	12 300	–	0,055	**3003-B-2RS-TVH**
	40	17,5	15 500	9 500	660	19 400	16 600	0,095	**3203-BD-XL-TVH**
	40	17,5	15 500	9 500	660	14 600	16 600	0,094	**3203-BD-XL-2Z-TVH**
	40	17,5	15 500	9 500	660	14 600	–	0,093	**3203-BD-XL-2HRS-TVH**
	47	22,2	22 500	13 100	910	16 600	12 600	0,177	**3303-BD-XL-TVH**
	47	22,2	22 500	13 100	910	12 400	12 600	0,176	**3303-BD-XL-2Z-TVH**
	47	22,2	22 500	13 100	910	12 400	–	0,176	**3303-BD-XL-2HRS-TVH**

medias *https://www.schaeffler.de/std/1F9A*

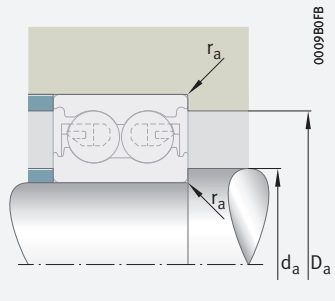

Mounting dimensions

Dimensions							Nominal contact angle	Mounting dimensions		
d	r	D_1	D_2	d_1	d_2	a	α	d_a	D_a	r_a
	min.	≈	≈	≈	≈	≈	°	min.	max.	max.
15	0,3	20,9	–	18,3	–	11,3	25	17	22	0,3
	0,3	–	21,8	–	17,2	11,3	25	17	22	0,3
	0,3	–	21,8	–	17,2	11,3	25	17	22	0,3
	0,3	27,2	–	21,3	–	18,4	25	17	30	0,3
	0,3	–	27,9	–	19,7	18,4	25	17	30	0,3
	0,3	–	27,9	–	19,7	18,4	25	17	30	0,3
	0,6	29,4	–	22,2	–	20,7	30	19,2	30,8	0,6
	0,6	–	31,1	–	21	20,7	30	19,2	30,8	0,6
	0,6	–	31,1	–	21	20,7	30	19,2	30,8	0,6
	1	35,7	–	27,2	–	24,8	30	20,6	36,4	1
	1	–	37,9	–	25,8	24,8	30	20,6	36,4	1
	1	–	37,9	–	25,8	24,8	30	20,6	36,4	1
17	0,3	22,9	–	20,3	–	12,3	25	19	24	0,3
	0,3	–	23,8	–	19,2	12,3	25	19	24	0,3
	0,3	–	23,8	–	19,2	12,3	25	19	24	0,3
	0,3	29,1	–	23,1	–	17,1	25	19	33	0,3
	0,3	–	29,8	–	21	17,1	25	19	33	0,3
	0,3	–	29,8	–	21	17,1	25	19	33	0,3
	0,6	33,9	–	25,8	–	23,5	30	21,2	35,8	0,6
	0,6	–	36,1	–	24,4	23,5	30	21,2	35,8	0,6
	0,6	–	36,1	–	24,4	23,5	30	21,2	35,8	0,6
	1	39	–	28,5	–	27,5	30	22,6	41,4	1
	1	–	41,1	–	27,1	27,5	30	22,6	41,4	1
	1	–	41,1	–	27,1	27,5	30	22,6	41,4	1

Angular contact ball bearings

Double row

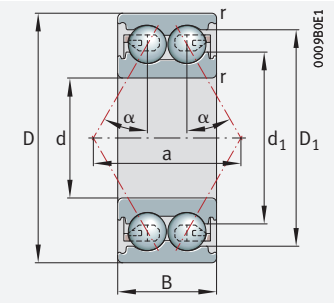

38..-B, 30..-B, 32..-B, 33..-B, 32..-BD, 33..-BD, 32, 33

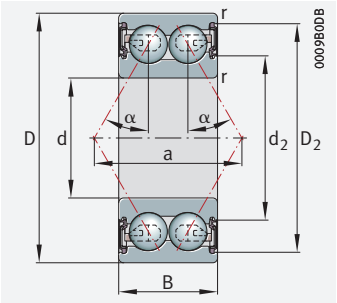

38..-B, 30..-B, 32..-B, 33..-B, 32..-BD, 33..-BD; with seal 2HRS, 2RS, 2RSR, 2RZ, 2Z

d = 20 – 25 mm

Main dimensions			Basic load ratings		Fatigue limit load	Limiting speed	Speed rating	Mass	Designation
d	D	B	dyn. C_r	stat. C_{0r}	C_{ur}	n_G	$n_{\vartheta r}$	m	➤*326*|*2.12* ➤*327*|*2.13* X-life ➤*320*
			N	N	N	min^{-1}	min^{-1}	≈ kg	
20	32	10	5 600	4 750	247	23 200	11 800	0,024	**3804-B-TVH**
	32	10	5 600	4 750	247	17 400	11 800	0,026	**3804-B-2RZ-TVH**
	32	10	5 600	4 750	247	10 700	–	0,026	**3804-B-2RS-TVH**
	42	16	14 300	9 400	490	18 100	13 200	0,08	**3004-B-TVH**
	42	16	14 300	9 400	490	13 600	13 200	0,094	**3004-B-2RZ-TVH**
	42	16	14 300	9 400	490	10 500	–	0,094	**3004-B-2RS-TVH**
	47	20,6	20 600	12 900	900	16 100	14 700	0,154	**3204-BD-XL-TVH**
	47	20,6	20 600	12 900	900	12 100	14 700	0,153	**3204-BD-XL-2Z-TVH**
	47	20,6	20 600	12 900	900	12 100	–	0,149	**3204-BD-XL-2HRS-TVH**
	52	22,2	24 600	15 900	1 100	14 700	10 400	0,215	**3304-BD-XL-TVH**
	52	22,2	24 600	15 900	1 100	11 000	10 400	0,214	**3304-BD-XL-2Z-TVH**
	52	22,2	24 600	15 900	1 100	11 000	–	0,217	**3304-BD-XL-2HRS-TVH**
25	37	10	5 900	5 500	285	20 400	10 300	0,034	**3805-B-TVH**
	37	10	5 900	5 500	285	15 300	10 300	0,036	**3805-B-2RZ-TVH**
	37	10	5 900	5 500	285	9 300	–	0,036	**3805-B-2RS-TVH**
	47	16	15 200	10 900	570	15 900	11 100	0,1	**3005-B-TVH**
	47	16	15 200	10 900	570	11 900	11 100	0,1	**3005-B-2RZ-TVH**
	47	16	15 200	10 900	570	8 800	–	0,1	**3005-B-2RS-TVH**
	52	20,6	22 000	15 200	1 050	14 300	12 500	0,174	**3205-BD-XL-TVH**
	52	20,6	22 000	15 200	1 050	10 700	12 500	0,175	**3205-BD-XL-2Z-TVH**
	52	20,6	22 000	15 200	1 050	10 700	–	0,176	**3205-BD-XL-2HRS-TVH**
	62	25,4	30 000	23 200	1 440	13 100	8 400	0,341	**3305-DA-TVP**
	62	25,4	31 500	21 000	1 460	12 400	9 400	0,352	**3305-BD-XL-TVH**
	62	25,4	31 500	21 000	1 460	9 300	9 400	0,348	**3305-BD-XL-2Z-TVH**
	62	25,4	31 500	21 000	1 460	9 300	–	0,352	**3305-BD-XL-2HRS-TVH**

medias *https://www.schaeffler.de/std/1F9A*

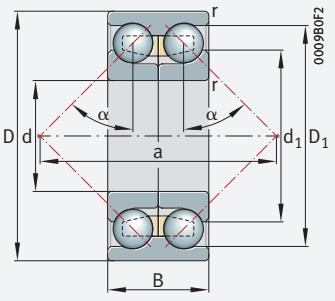

33..-DA;
split inner ring

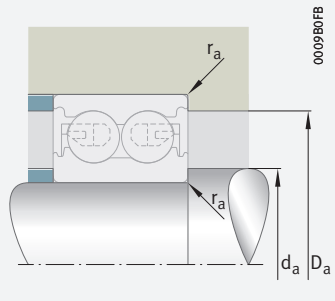

Mounting dimensions

Dimensions							Nominal contact angle	Mounting dimensions		
d	r	D_1	D_2	d_1	d_2	a	α	d_a	D_a	r_a
	min.	≈	≈	≈	≈	≈	°	min.	max.	max.
20	0,3	29,2	–	25,1	–	16,1	25	22	30	0,3
	0,3	–	30,1	–	23,9	16,1	25	22	30	0,3
	0,3	–	30,1	–	23,9	16,1	25	22	30	0,3
	0,6	35	–	27,1	–	21,1	25	23,2	38,8	0,6
	0,6	–	36,4	–	25,3	21,1	25	23,2	38,8	0,6
	0,6	–	36,4	–	25,3	21,1	25	23,2	38,8	0,6
	1	40,1	–	30,8	–	27,9	30	25,6	41,4	1
	1	–	42,2	–	29,2	27,9	30	25,6	41,4	1
	1	–	42,2	–	29,2	27,9	30	25,6	41,4	1
	1,1	44	–	33,5	–	30,4	30	27	45	1
	1,1	–	46,1	–	31,9	30,4	30	27	45	1
	1,1	–	46,1	–	31,9	30,4	30	27	45	1
25	0,3	33,2	–	29,1	–	17,9	25	27	35	0,3
	0,3	–	34,1	–	27,9	17,9	25	27	35	0,3
	0,3	–	34,1	–	27,9	17,9	25	27	35	0,3
	0,6	40,1	–	32,1	–	23,4	25	28,2	43,8	0,6
	0,6	–	41,8	–	30,3	23,4	25	28,2	43,8	0,6
	0,6	–	41,8	–	30,3	23,4	25	28,2	43,8	0,6
	1	45,1	–	35,8	–	30,8	30	30,6	46,4	1
	1	–	47,6	–	34,2	30,8	30	30,6	46,4	1
	1	–	47,6	–	34,2	30,8	30	30,6	46,4	1
	1,1	51,8	–	41	–	56	45	32	55	1
	1,1	51,5	–	39,5	–	35,4	30	32	55	1
	1,1	–	53,7	–	37,6	35,4	30	32	55	1
	1,1	–	53,7	–	37,6	35,4	30	32	55	1

Angular contact ball bearings

Double row

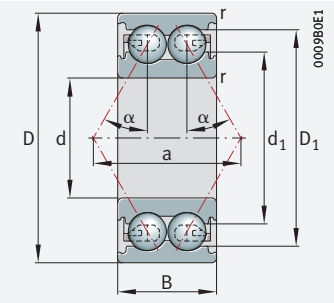

38..-B, 30..-B, 32..-B, 33..-B, 32..-BD, 33..-BD, 32, 33

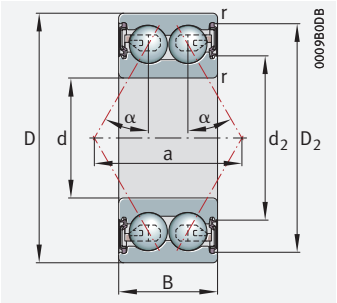

38..-B, 30..-B, 32..-B, 33..-B, 32..-BD, 33..-BD; with seal 2HRS, 2RS, 2RSR, 2RZ, 2Z

d = 30 – 35 mm

Main dimensions			Basic load ratings		Fatigue limit load	Limiting speed	Speed rating	Mass	Designation
d	D	B	dyn. C_r	stat. C_{0r}	C_{ur}	n_G	$n_{\vartheta r}$	m	➤326|2.12 ➤327|2.13 X-life ➤320
			N	N	N	min^{-1}	min^{-1}	≈ kg	
30	42	10	6 100	6 000	320	17 700	8 700	0,035	**3806-B-TVH**
	42	10	6 100	6 000	320	13 300	8 700	0,037	**3806-B-2RZ-TVH**
	42	10	6 100	6 000	320	8 100	–	0,037	**3806-B-2RS-TVH**
	55	19	19 900	15 400	800	13 500	10 100	0,16	**3006-B-TVH**
	55	19	19 900	15 400	800	10 100	10 100	0,16	**3006-B-2RZ-TVH**
	55	19	19 900	15 400	800	7 400	–	0,16	**3006-B-2RS-TVH**
	62	23,8	31 000	22 200	1 540	11 900	11 100	0,288	**3206-BD-XL-TVH**
	62	23,8	31 000	22 200	1 540	9 000	11 100	0,283	**3206-BD-XL-2Z-TVH**
	62	23,8	31 000	22 200	1 540	9 000	–	0,29	**3206-BD-XL-2HRS-TVH**
	72	30,2	41 500	34 500	1 870	10 900	7 500	0,657	**3306-DA**
	72	30,2	43 000	29 500	2 050	10 400	8 500	0,543	**3306-BD-XL-TVH**
	72	30,2	43 000	29 500	2 050	7 800	8 500	0,54	**3306-BD-XL-2Z-TVH**
	72	30,2	43 000	29 500	2 050	7 800	–	0,549	**3306-BD-XL-2HRS-TVH**
35	47	10	6 500	6 800	375	15 500	7 400	0,039	**3807-B-TVH**
	47	10	6 500	6 800	375	11 700	7 400	0,041	**3807-B-2RZ-TVH**
	47	10	6 500	6 800	375	7 000	–	0,041	**3807-B-2RS-TVH**
	62	20	24 000	19 100	1 000	11 700	8 800	0,2	**3007-B-TVH**
	62	20	24 000	19 100	1 000	8 800	8 800	0,224	**3007-B-2RZ-TVH**
	62	20	24 000	19 100	1 000	6 400	–	0,224	**3007-B-2RS-TVH**
	72	27	41 000	30 000	2 090	10 100	9 900	0,436	**3207-BD-XL-TVH**
	72	27	41 000	30 000	2 090	7 600	9 900	0,432	**3207-BD-XL-2Z-TVH**
	72	27	41 000	30 000	2 090	7 600	–	0,44	**3207-BD-XL-2HRS-TVH**
	80	34,9	50 000	41 000	2 650	9 600	7 100	0,889	**3307-DA**
	80	34,9	55 000	36 500	2 550	9 000	8 100	0,706	**3307-BD-XL-TVH**
	80	34,9	55 000	36 500	2 550	6 800	8 100	0,702	**3307-BD-XL-2Z-TVH**
	80	34,9	55 000	36 500	2 550	6 800	–	0,717	**3307-BD-XL-2HRS-TVH**

medias *https://www.schaeffler.de/std/1F9A*

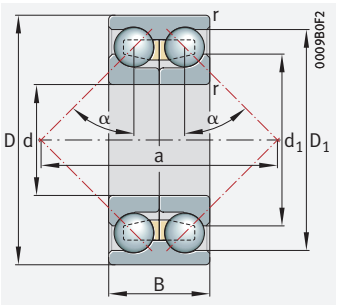

33..-DA;
split inner ring

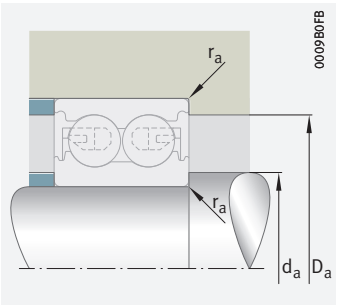

Mounting dimensions

Dimensions							Nominal contact angle	Mounting dimensions		
d	r	D_1	D_2	d_1	d_2	a	α	d_a	D_a	r_a
	min.	≈	≈	≈	≈	≈	°	min.	max.	max.
30	0,3	38	–	34	–	20,2	25	32	40	0,3
	0,3	–	39	–	32,9	20,2	25	32	40	0,3
	0,3	–	39	–	32,9	20,2	25	32	40	0,3
	1	46,7	–	37,3	–	27,4	25	34,6	50,4	1
	1	–	49,1	–	35,6	27,4	25	34,6	50,4	1
	1	–	49,1	–	35,6	27,4	25	34,6	50,4	1
	1	53,3	–	42,2	–	36,4	30	35,6	56,4	1
	1	–	55,8	–	40,3	36,4	30	35,6	56,4	1
	1	–	55,8	–	40,3	36,4	30	35,6	56,4	1
	1,1	61,5	–	48,2	–	67	45	37	65	1
	1,1	60,5	–	46,3	–	41,9	30	37	65	1
	1,1	–	63,5	–	44,4	41,9	30	37	65	1
	1,1	–	63,5	–	44,4	41,9	30	37	65	1
35	0,3	43	–	39	–	22,6	25	37	45	0,3
	0,3	–	44,1	–	37,6	22,6	25	37	45	0,3
	0,3	–	44,1	–	37,6	22,6	25	37	45	0,3
	1	53,3	–	43,7	–	30,9	25	39,6	57,4	1
	1	–	55,3	–	40,5	30,9	25	39,6	57,4	1
	1	–	55,3	–	40,5	30,9	25	39,6	57,4	1
	1,1	62,4	–	49,1	–	42,5	30	42	65	1
	1,1	–	65,4	–	46,9	42,5	30	42	65	1
	1,1	–	65,4	–	46,9	42,5	30	42	65	1
	1,5	69,5	–	55,2	–	75	45	44	71	1,5
	1,5	68,9	–	51,8	–	48	30	44	71	1,5
	1,5	–	71,9	–	49,6	48	30	44	71	1,5
	1,5	–	71,9	–	49,6	48	30	44	71	1,5

Angular contact ball bearings

Double row

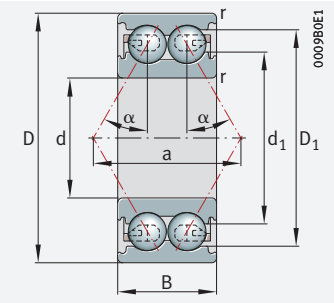

38..-B, 30..-B, 32..-B, 33..-B, 32..-BD, 33..-BD, 32, 33

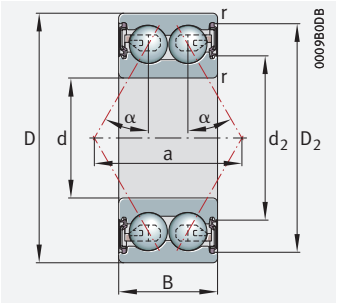

38..-B, 30..-B, 32..-B, 33..-B, 32..-BD, 33..-BD; with seal 2HRS, 2RS, 2RSR, 2RZ, 2Z

d = 40 – 50 mm

Main dimensions			Basic load ratings		Fatigue limit load	Limiting speed	Speed rating	Mass	Designation
d	D	B	dyn. C_r	stat. C_{0r}	C_{ur}	n_G	$n_{\vartheta r}$	m	➤*326*|*2.12* ➤*327*|*2.13* X-life ➤*320*
			N	N	N	min^{-1}	min^{-1}	≈ kg	
40	52	10	6 900	7 600	430	13 700	6 300	0,044	**3808-B-TVH**
	52	10	6 900	7 600	430	10 300	6 300	0,046	**3808-B-2RZ-TVH**
	52	10	6 900	7 600	430	6 100	–	0,046	**3808-B-2RS-TVH**
	68	21	25 000	21 300	1 110	10 600	8 000	0,25	**3008-B-TVH**
	68	21	25 000	21 300	1 110	8 000	8 000	0,25	**3008-B-2RZ-TVH**
	68	21	25 000	21 300	1 110	5 600	–	0,25	**3008-B-2RS-TVH**
	80	30,2	51 000	38 000	2 650	8 900	9 100	0,591	**3208-BD-XL-TVH**
	80	30,2	51 000	38 000	2 650	6 700	9 100	0,58	**3208-BD-XL-2Z-TVH**
	80	30,2	51 000	38 000	2 650	6 700	–	0,597	**3208-BD-XL-2HRS-TVH**
	90	36,5	62 000	52 000	3 300	10 700	6 000	1,2	**3308-DA-MA**
	90	36,5	67 000	48 500	3 350	8 000	7 000	0,969	**3308-BD-XL-TVH**
	90	36,5	67 000	48 500	3 350	6 000	7 000	0,967	**3308-BD-XL-2Z-TVH**
	90	36,5	67 000	48 500	3 350	6 000	–	0,985	**3308-BD-XL-2HRS-TVH**
45	58	10	7 000	8 100	465	12 400	5 700	0,055	**3809-B-TVH**
	58	10	7 000	8 100	465	9 300	5 700	0,058	**3809-B-2RZ-TVH**
	58	10	7 000	8 100	465	5 500	–	0,058	**3809-B-2RS-TVH**
	85	30,2	50 000	39 000	2 700	8 300	8 400	0,622	**3209-BD-XL-TVH**
	85	30,2	50 000	39 000	2 700	6 300	8 400	0,618	**3209-BD-XL-2Z-TVH**
	85	30,2	50 000	39 000	2 700	6 300	–	0,626	**3209-BD-XL-2HRS-TVH**
	100	39,7	71 000	64 000	3 600	7 500	5 800	1,55	**3309-DA**
	100	39,7	72 000	54 000	3 700	7 300	6 700	1,34	**3309-BD-XL-TVH**
	100	39,7	72 000	54 000	3 700	5 500	6 700	1,32	**3309-BD-XL-2Z-TVH**
	100	39,7	72 000	54 000	3 700	5 500	–	1,31	**3309-BD-XL-2HRS-TVH**
50	65	12	8 500	10 200	590	10 900	5 400	0,09	**3810-B-TVH**
	65	12	8 500	10 200	590	8 100	5 400	0,093	**3810-B-2RZ-TVH**
	65	12	8 500	10 200	590	4 800	–	0,093	**3810-B-2RS-TVH**
	90	30,2	53 000	44 000	3 050	7 800	7 600	0,672	**3210-BD-XL-TVH**
	90	30,2	53 000	44 000	3 050	5 900	7 600	0,667	**3210-BD-XL-2Z-TVH**
	90	30,2	53 000	44 000	3 050	5 900	–	0,668	**3210-BD-XL-2HRS-TVH**
	110	44,4	90 000	84 000	5 300	8 700	5 300	2,24	**3310-DA-MA**
	110	44,4	93 000	70 000	4 850	6 500	6 300	1,75	**3310-BD-XL-TVH**
	110	44,4	93 000	70 000	4 850	4 900	6 300	1,75	**3310-BD-XL-2Z-TVH**
	110	44,4	93 000	70 000	4 850	4 900	–	1,75	**3310-BD-XL-2HRS-TVH**

medias *https://www.schaeffler.de/std/1F9A*

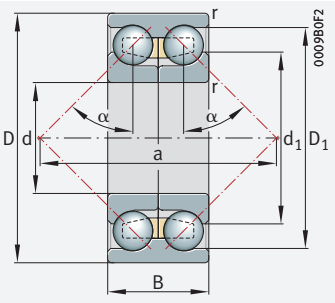

33..-DA;
split inner ring

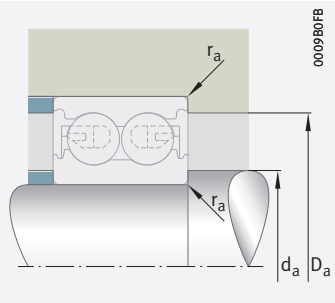

Mounting dimensions

Dimensions							Nominal contact angle	Mounting dimensions		
d	r	D_1	D_2	d_1	d_2	a	α	d_a	D_a	r_a
	min.	≈	≈	≈	≈	≈	°	min.	max.	max.
40	0,3	48,5	–	44,6	–	25,2	25	42	50	0,3
	0,3	–	49,6	–	43,5	25,2	25	42	50	0,3
	0,3	–	49,6	–	43,5	25,2	25	42	50	0,3
	1	58,8	–	49,2	–	33,4	25	44,6	63,4	1
	1	–	61,2	–	46,7	33,4	25	44,6	63,4	1
	1	–	61,2	–	46,7	33,4	25	44,6	63,4	1
	1,1	69,6	–	54,9	–	47,4	30	47	73	1
	1,1	–	72,6	–	52,8	47,4	30	47	73	1
	1,1	–	72,6	–	52,8	47,4	30	47	73	1
	1,5	79,7	–	61,7	–	85	45	49	81	1,5
	1,5	77	–	59	–	53,1	30	49	81	1,5
	1,5	–	79,9	–	56,8	53,1	30	49	81	1,5
	1,5	–	79,9	–	56,8	53,1	30	49	81	1,5
45	0,3	53,6	–	49,6	–	27,5	25	47	56	0,3
	0,3	–	54,6	–	48,1	27,5	25	47	56	0,3
	0,3	–	54,6	–	48,1	27,5	25	47	56	0,3
	1,1	75,1	–	59,9	–	50,3	30	52	78	1
	1,1	–	78,1	–	57,7	50,3	30	52	78	1
	1,1	–	78,1	–	57,7	50,3	30	52	78	1
	1,5	86,7	–	68,3	–	93	45	54	91	1,5
	1,5	84,4	–	65,5	–	57,8	30	54	91	1,5
	1,5	–	87,3	–	63,3	57,8	30	54	91	1,5
	1,5	–	87,3	–	63,3	57,8	30	54	91	1,5
50	0,3	60,7	–	56,3	–	31	25	52	63	0,3
	0,3	–	61,7	–	55,2	31	25	52	63	0,3
	0,3	–	61,7	–	55,2	31	25	52	63	0,3
	1,1	80,1	–	64,9	–	53,2	30	57	83	1
	1,1	–	82,9	–	62,8	53,2	30	57	83	1
	1,1	–	82,9	–	62,8	53,2	30	57	83	1
	2	96,9	–	77,3	–	104	45	61	99	2
	2	93,3	–	71,5	–	64,2	30	61	99	2
	2	–	96,8	–	69,1	64,2	30	61	99	2
	2	–	96,8	–	69,1	64,2	30	61	99	2

Angular contact ball bearings

Double row

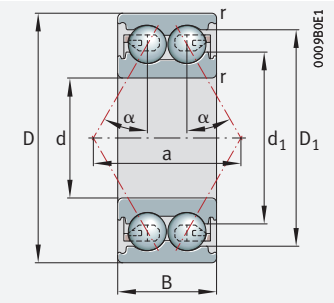

38..-B, 30..-B, 32..-B, 33..-B, 32..-BD, 33..-BD, 32, 33

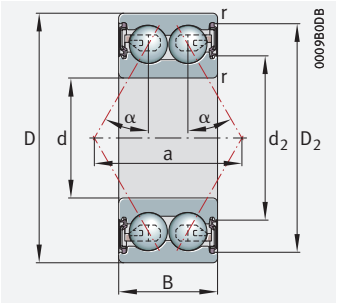

38..-B, 30..-B, 32..-BD, 33..-BD; with seal 2HRS, 2RS, 2RZ, 2Z

d = 55 – 65 mm

Main dimensions			Basic load ratings		Fatigue limit load	Limiting speed	Speed rating	Mass	Designation
d	D	B	dyn. C_r	stat. C_{0r}	C_{ur}	n_G	$n_{\vartheta r}$	m	➤*326*|*2.12* ➤*327*|*2.13* X-life ➤*320*
			N	N	N	min^{-1}	min^{-1}	≈ kg	
55	72	13	10 700	13 100	760	9 600	4 850	0,13	**3811-B-TVH**
	72	13	10 700	13 100	760	7 200	4 850	0,134	**3811-B-2RZ-TVH**
	72	13	10 700	13 100	760	4 300	–	0,134	**3811-B-2RS-TVH**
	100	33,3	61 000	51 000	3 550	7 100	7 200	0,94	**3211-BD-XL-TVH**
	100	33,3	61 000	51 000	3 550	5 300	7 200	0,93	**3211-BD-XL-2Z-TVH**
	100	33,3	61 000	51 000	3 550	5 300	–	0,933	**3211-BD-XL-2HRS-TVH**
	120	49,2	105 000	101 000	5 600	8 000	5 200	2,85	**3311-DA-MA**
	120	49,2	116 000	88 000	6 100	5 800	5 900	2,28	**3311-BD-XL-TVH**
	120	49,2	116 000	88 000	6 100	4 350	5 900	2,27	**3311-BD-XL-2Z-TVH**
	120	49,2	116 000	88 000	6 100	4 350	–	2,26	**3311-BD-XL-2HRS-TVH**
60	78	14	14 200	17 100	970	8 800	4 700	0,161	**3812-B-TVH**
	78	14	14 200	17 100	970	6 600	4 700	0,166	**3812-B-2RZ-TVH**
	78	14	14 200	17 100	970	4 050	–	0,166	**3812-B-2RS-TVH**
	110	36,5	75 000	64 000	4 400	6 300	6 700	1,25	**3212-BD-XL-TVH**
	110	36,5	75 000	64 000	4 400	4 750	6 700	1,24	**3212-BD-XL-2Z-TVH**
	110	36,5	75 000	64 000	4 400	4 750	–	1,25	**3212-BD-XL-2HRS-TVH**
	130	54	121 000	118 000	6 700	5 500	4 850	3,39	**3312-DA**
	130	54	126 000	103 000	5 300	3 950	5 000	2,85	**3312-B-TVH**
	130	54	126 000	103 000	5 300	3 950	5 000	2,92	**3312-B-2Z-TVH**
	130	54	126 000	103 000	5 300	3 300	–	2,92	**3312-B-2RSR-TVH**
65	120	38,1	86 000	77 000	5 300	5 700	6 000	1,6	**3213-BD-XL-TVH**
	120	38,1	86 000	77 000	5 300	4 300	6 000	1,6	**3213-BD-XL-2Z-TVH**
	120	38,1	86 000	77 000	5 300	4 300	–	1,6	**3213-BD-XL-2HRS-TVH**
	140	58,7	139 000	137 000	7 400	5 100	4 650	4,38	**3313-DA**
	140	58,7	150 000	119 000	8 100	4 900	5 300	4,1	**3313-BD-XL-TVH**
	140	58,7	150 000	119 000	8 100	3 650	5 300	4,1	**3313-BD-XL-2Z-TVH**

medias *https://www.schaeffler.de/std/1F9A*

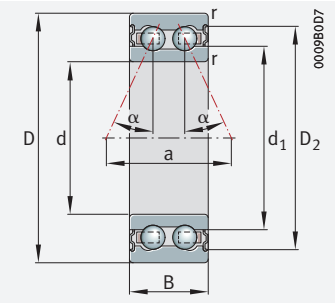

32..-B, 33..-B;
with seal 2RSR, 2Z

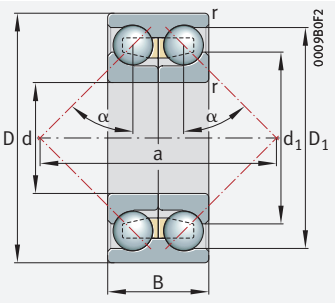

33..-DA;
split inner ring

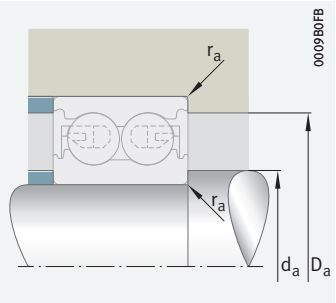

Mounting dimensions

Dimensions							Nominal contact angle	Mounting dimensions		
d	r	D_1	D_2	d_1	d_2	a	α	d_a	D_a	r_a
	min.	≈	≈	≈	≈	≈	°	min.	max.	max.
55	0,3	68	–	63,1	–	34,9	25	57	70	0,3
	0,3	–	69,1	–	61,4	34,9	25	57	70	0,3
	0,3	–	69,1	–	61,4	34,9	25	57	70	0,3
	1,5	87,8	–	71,6	–	58,4	30	64	91	1,5
	1,5	–	90,8	–	69,2	58,4	30	64	91	1,5
	1,5	–	90,8	–	69,2	58,4	30	64	91	1,5
	2	105,3	–	81,6	–	111	45	66	109	2
	2	103,3	–	78,8	–	71,4	30	66	109	2
	2	–	106,8	–	76,4	71,4	30	66	109	2
	2	–	106,8	–	76,4	71,4	30	66	109	2
60	0,3	73	–	67,1	–	38,1	25	62	76	0,3
	0,3	–	74,8	–	67,3	38,1	25	62	76	0,3
	0,3	–	74,8	–	67,3	38,1	25	62	76	0,3
	1,5	97	–	79	–	64,7	30	69	101	1,5
	1,5	–	100,5	–	76,6	64,7	30	69	101	1,5
	1,5	–	100,5	–	76,6	64,7	30	69	101	1,5
	2,1	115,8	–	91,9	–	122	45	72	118	2,1
	2,1	108,7	–	81,6	–	67,3	25	72	118	2,1
	2,1	–	113,1	81,3	–	67,3	25	72	118	2,1
	2,1	–	113,1	81,3	–	67,3	25	72	118	2,1
65	1,5	106,6	–	87,7	–	70,6	30	74	111	1,5
	1,5	–	110,1	–	85,3	70,6	30	74	111	1,5
	1,5	–	110,1	–	85,3	70,6	30	74	111	1,5
	2,1	124,1	–	98,4	–	131	45	77	128	2,1
	2,1	120,5	–	93,4	–	83,5	30	77	128	2,1
	2,1	–	125	–	90,6	83,5	30	77	128	2,1

Angular contact ball bearings

Double row

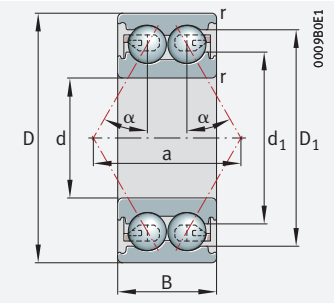

38..-B, 30..-B, 32..-B, 33..-B, 32..-BD, 33..-BD, 32, 33

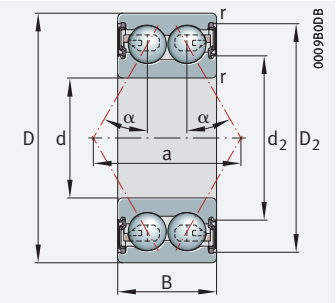

38..-B, 30..-B, 32..-BD, 33..-BD; with seal 2HRS, 2RS, 2RZ, 2Z

d = 70 – 85 mm

Main dimensions			Basic load ratings		Fatigue limit load	Limiting speed	Speed rating	Mass	Designation
d	D	B	dyn. C_r	stat. C_{0r}	C_{ur}	n_G	$n_{\vartheta r}$	m	➤*326*|*2.12* ➤*327*|*2.13* X-life ➤*320*
			N	N	N	min^{-1}	min^{-1}	≈ kg	
70	90	15	18 800	23 200	1 310	7 500	4 050	0,2	**3814-B-TVH**
	90	15	18 800	23 200	1 310	5 700	4 050	0,205	**3814-B-2RZ-TVH**
	90	15	18 800	23 200	1 310	3 450	–	0,205	**3814-B-2RS-TVH**
	125	39,7	82 000	79 000	4 100	4 150	5 600	1,78	**3214-B-TVH**
	125	39,7	82 000	79 000	4 100	4 150	5 600	1,78	**3214-B-2Z-TVH**
	125	39,7	82 000	79 000	4 100	3 100	–	1,78	**3214-B-2RSR-TVH**
	150	63,5	157 000	157 000	8 500	4 800	4 550	5,36	**3314-DA**
	150	63,5	172 000	135 000	8 900	4 550	5 100	4,5	**3314-BD-XL-TVH**
	150	63,5	172 000	135 000	8 900	3 400	5 100	4,5	**3314-BD-XL-2Z-TVH**
	150	63,5	167 000	176 000	8 700	4 750	4 500	4,89	**3314**
75	130	41,3	88 000	85 000	4 350	3 900	5 300	1,91	**3215-B-TVH**
	130	41,3	88 000	85 000	4 350	3 900	5 300	1,94	**3215-B-2Z-TVH**
	130	41,3	88 000	85 000	4 350	2 900	–	1,94	**3215-B-2RSR-TVH**
	160	68,3	184 000	179 000	10 200	5 800	4 350	5,9	**3315-DA-MA**
	160	68,3	192 000	209 000	10 000	4 400	4 250	6,16	**3315**
80	100	15	19 200	24 800	1 430	6 800	3 650	0,22	**3816-B-TVH**
	100	15	19 200	24 800	1 430	5 100	3 650	0,23	**3816-B-2RZ-TVH**
	100	15	19 200	24 800	1 430	3 100	–	0,23	**3816-B-2RS-TVH**
	140	44,4	99 000	102 000	5 100	3 650	5 100	2,4	**3216-B-TVH**
	140	44,4	99 000	102 000	5 100	3 650	5 100	2,48	**3216-B-2Z-TVH**
	140	44,4	99 000	102 000	5 100	2 700	–	2,48	**3216-B-2RSR-TVH**
	170	68,3	192 000	196 000	9 900	5 400	3 900	7,88	**3316-DA-MA**
	170	68,3	199 000	180 000	11 100	3 950	4 300	6,4	**3316-BD-XL-TVH**
	170	68,3	199 000	180 000	11 100	2 950	–	6,3	**3316-BD-XL-2HRS-TVH**
	170	68,3	208 000	226 000	10 600	4 150	3 900	6,79	**3316**
85	150	49,2	135 000	127 000	6 100	3 350	4 900	3	**3217-B-TVH**
	150	49,2	135 000	127 000	6 100	3 350	4 900	3,3	**3217-B-2Z-TVH**
	150	49,2	135 000	127 000	6 100	2 600	–	3,3	**3217-B-2RS-TVH**
	150	49,2	128 000	154 000	7 400	4 650	4 700	3,32	**3217**
	180	73	229 000	255 000	11 400	5 000	3 600	8,46	**3317-M**
	180	73	209 000	221 000	11 000	5 200	3 750	9,39	**3317-DA-MA**

medias *https://www.schaeffler.de/std/1F9A*

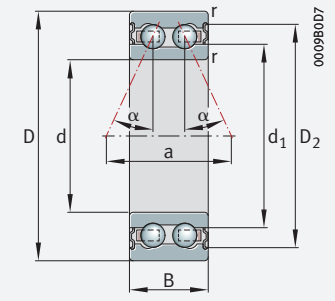

32..-B, 33..-B;
with seal 2RSR, 2Z

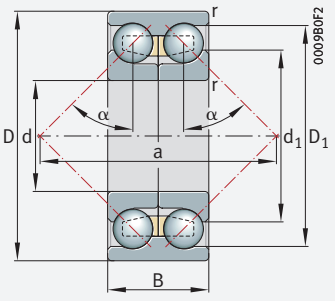

33..-DA;
split inner ring

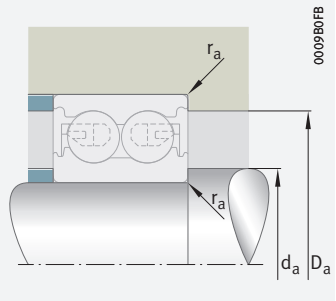

Mounting dimensions

Dimensions							Nominal contact angle	Mounting dimensions		
d	r	D_1	D_2	d_1	d_2	a	α	d_a	D_a	r_a
	min.	≈	≈	≈	≈	≈	°	min.	max.	max.
70	0,6	84,5	–	77,7	–	43,6	25	73,2	86,8	0,6
	0,6	–	86,3	–	76,6	43,6	25	73,2	86,8	0,6
	0,6	–	86,3	–	76,6	43,6	25	73,2	86,8	0,6
	1,5	106,3	–	87	–	61,6	25	79	116	1,5
	1,5	–	110,7	86,8	–	61,6	25	79	116	1,5
	1,5	–	110,7	86,8	–	61,6	25	79	116	1,5
	2,1	132,4	–	103,4	–	141	45	82	138	2,1
	2,1	129,2	–	100,3	–	89,4	30	82	138	2,1
	2,1	–	133,7	–	96,9	89,4	30	82	138	2,1
	2,1	131,9	–	98,5	–	109	35	82	138	2,1
75	1,5	112,6	–	92,4	–	65,2	25	84	121	1,5
	1,5	–	115,5	92,1	–	65,2	25	84	121	1,5
	1,5	–	115,5	92,1	–	65,2	25	84	121	1,5
	2,1	141,3	–	109,3	–	150	45	87	148	2,1
	2,1	141,2	–	105,5	–	116,6	35	87	148	2,1
80	0,6	93,5	–	86,7	–	47,8	25	83,2	96,8	0,6
	0,6	–	95,3	–	85,5	47,8	25	83,2	96,8	0,6
	0,6	–	95,3	–	85,5	47,8	25	83,2	96,8	0,6
	2	120,3	–	98,8	–	69,1	25	91	129	2
	2	–	124,5	98,5	–	69,1	25	91	129	2
	2	–	124,5	98,5	–	69,1	25	91	129	2
	2,1	149,9	–	118,7	–	159	45	92	158	2,1
	2,1	148	–	116,7	–	100,8	30	92	158	2,1
	2,1	–	151,9	–	114	100,8	30	92	158	2,1
	2,1	149,7	–	111,8	–	122,5	35	92	158	2,1
85	2	130,4	–	105	–	75,9	25	96	139	2
	2	–	135,1	–	102,3	75,9	25	96	139	2
	2	–	135,1	–	102,3	75,9	25	96	139	2
	2	135,1	–	108,5	–	106,3	35	96	139	2
	3	160	–	119,6	–	131,5	35	99	166	2,5
	3	156,5	–	124,3	–	167	45	99	166	2,5

Angular contact ball bearings

Double row

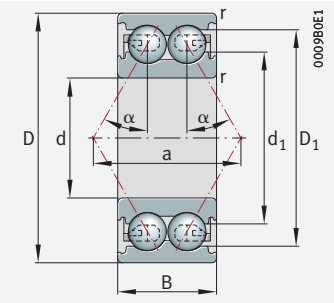

38..-B, 30..-B, 32..-B, 33..-B, 32..-BD, 33..-BD, 32, 33

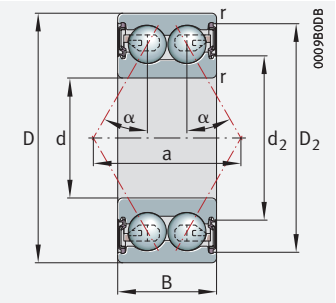

38..-B, 30..-B, 32..-BD, 33..-BD; with seal 2HRS, 2RS, 2RZ, 2Z

d = 90 – 110 mm

Main dimensions			Basic load ratings		Fatigue limit load	Limiting speed	Speed rating	Mass	Designation
d	D	B	dyn. C_r	stat. C_{0r}	C_{ur}	n_G	$n_{\vartheta r}$	m	➤*326* | *2.12* ➤*327* | *2.13* X-life ➤*320*
			N	N	N	min^{-1}	min^{-1}	≈ kg	
90	115	19	27 000	35 500	2 000	5 900	3 550	0,41	**3818-B-TVH**
	115	19	27 000	35 500	2 000	2 750	–	0,422	**3818-B-2RS-TVH**
	160	52,4	142 000	142 000	6 500	4 100	4 500	3,8	**3218-B-TVH**
	160	52,4	142 000	142 000	6 500	2 370	–	4	**3218-B-2RS-TVH**
	160	52,4	143 000	172 000	8 000	4 350	4 550	4,14	**3218**
	190	73	226 000	247 000	11 600	4 850	3 450	10,4	**3318-DA-MA**
	190	73	260 000	295 000	13 000	3 650	3 350	9,14	**3318**
95	170	55,6	161 000	193 000	8 800	5 300	4 350	5,06	**3219-M**
	200	77,8	270 000	315 000	13 500	4 450	3 200	11,2	**3319-M**
100	125	19	28 000	39 000	2 120	5 300	3 100	0,45	**3820-B-TVH**
	125	19	28 000	39 000	2 120	2 470	–	0,463	**3820-B-2RS-TVH**
	180	60,3	185 000	173 000	7 600	3 650	4 400	5,4	**3220-B-TVH**
	180	60,3	185 000	173 000	7 600	2 750	4 400	5,5	**3220-B-2Z-TVH**
	180	60,3	185 000	173 000	7 600	2 210	–	5,5	**3220-B-2RS-TVH**
	180	60,3	186 000	235 000	10 300	3 750	4 050	5,98	**3220**
	215	82,6	285 000	340 000	14 100	4 200	3 000	14	**3320-M**
	215	82,6	260 000	305 000	13 600	4 300	3 050	15,6	**3320-DA-MA**
105	190	65,1	215 000	270 000	11 400	4 600	3 850	7,4	**3221-M**
110	200	69,8	236 000	290 000	12 200	4 400	3 750	9,03	**3222-M**
	240	92,1	330 000	425 000	16 800	3 750	2 650	20	**3322-M**
	240	92,1	310 000	385 000	17 400	3 800	2 700	21,8	**3322-DA-MA**

medias *https://www.schaeffler.de/std/1F9A*

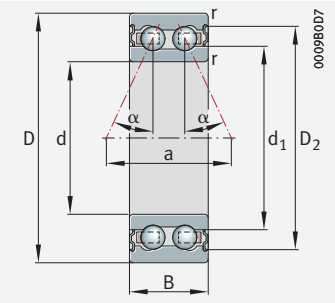

32..-B, 33..-B;
with seal 2RSR, 2Z

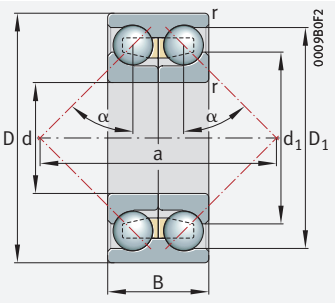

33..-DA;
split inner ring

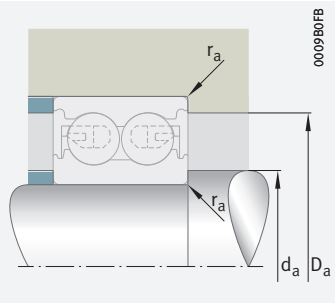

Mounting dimensions

Dimensions							Nominal contact angle	Mounting dimensions		
d	r	D_1	D_2	d_1	d_2	a	α	d_a	D_a	r_a
	min.	≈	≈	≈	≈	≈	°	min.	max.	max.
90	1	106,6	–	98,4	–	55	25	94,6	110,4	1
	1	–	107,2	–	96,2	55	25	94,6	110,4	1
	2	141,6	–	116,4	–	81,4	25	104	146	2
	2	–	145,2	–	112,1	81,4	25	104	146	2
	2	143,7	–	115,6	–	112,5	35	104	146	2
	3	166,2	–	131,9	–	177	45	104	176	2,5
	3	168,2	–	126,1	–	136	35	104	176	2,5
95	2,1	152,8	–	122,2	–	119,8	35	107	158	2,1
	3	177,3	–	133	–	143,3	35	109	186	2,5
100	1	117,9	–	109,5	–	60,2	25	104,6	120,4	1
	1	–	118,5	–	107,3	60,2	25	104,6	120,4	1
	2,1	155,7	–	124,7	–	91,3	25	112	168	2,1
	2,1	–	157,4	–	121,3	91,3	25	112	168	2,1
	2,1	–	157,4	–	121,3	91,3	25	112	168	2,1
	2,1	163,7	–	131	–	127,4	35	112	168	2,1
	3	188,7	–	142,5	–	153,3	35	114	201	2,5
	3	187,1	–	147,5	–	197,5	45	114	201	2,5
105	2,1	172,1	–	138	–	134,7	35	117	178	2,1
110	2,1	180,1	–	143,3	–	143,5	35	122	188	2,1
	3	209,6	–	161,5	–	170,5	35	124	226	2,5
	3	207,3	–	164,5	–	221	45	124	226	2,5

Four point contact bearings



Matrix for bearing preselection 353

1 Four point contact bearings 354

1.1 Bearing design 354
1.2 Load carrying capacity 356
1.3 Compensation of angular misalignments 356
1.4 Lubrication 357
1.5 Sealing 357
1.6 Speeds 357

FAG

1.7 Noise ____ *357*
1.8 Temperature range ____ *358*
1.9 Cages ____ *359*
1.10 Internal clearance ____ *359*
1.11 Dimensions, tolerances ____ *360*
1.12 Suffixes ____ *360*
1.13 Structure of bearing designation ____ *360*
1.14 Dimensioning ____ *361*
1.15 Minimum load ____ *361*
1.16 Design of bearing arrangements ____ *362*
1.17 Mounting and dismounting ____ *363*
1.18 Legal notice regarding data freshness ____ *364*
1.19 Further information ____ *364*
Product tables ____ *366*
Four point contact bearings ____ *366*

Matrix for bearing preselection

The matrix gives an overview of the types and design features.

It can be used to make a preliminary assessment of whether a bearing is fundamentally suitable for the envisaged application.

The additional information provided in the product chapter (see column "detailed information") and in the Technical principles must, however, be observed in addition to this overview in selection of the bearing.

+++ extremely suitable
++ highly suitable
+ suitable
(+) suitable with restrictions
– not suitable/not applicable
✓ available

Design features and suitability			Four point contact bearings	
			with/without retaining slots	detailed information ➤ 354
Load carrying capacity	radial		(+)	➤ 356 | 1.2
	axial, one direction		++	➤ 356 | 1.2
	axial, both directions		++	➤ 356 | 1.2
	moments		(+)	➤ 356 | 1.2
Compensation of angular misalignments	static		–	➤ 356 | 1.3
	dynamic		–	➤ 356 | 1.3
Bearing design	cylindrical bore		✓	➤ 354 | 1.1
	tapered bore		–	
	separable		✓	➤ 363 | 1.17
Lubrication	greased		–	➤ 357 | 1.4
Sealing	open		✓	➤ 357 | 1.5
	non-contact		–	➤ 357 | 1.5
	contact		–	➤ 357 | 1.5
Operating temperature in °C	from to		–30 +150[1]	➤ 358 | 1.8
Suitability for	high speeds		(+)	➤ 357 | 1.6
	high running accuracy		(+)	➤ 360 | 1.11 ➤ 115
	low-noise running		(+)	➤ 357 | 1.7
	high rigidity		+	➤ 54
	reduced friction		+	➤ 56
	length compensation within bearing		–	
	non-locating bearing arrangement		–	➤ 141
	locating bearing arrangement		++	➤ 141
X-life bearings		X-life	✓	➤ 355
Bearing bore d in mm	from to		17 200[2]	➤ 366
Product tables	from page ➤		366	

1) Valid for bearings with brass cages, D ≦ 240 mm
2) Larger catalogue bearings GL 1

1 Four point contact bearings

Four point contact bearings are particularly suitable where:
- predominantly axial loads must be supported ➤*356|1.2*
- the axial design envelope is not sufficient for double row radial angular contact ball bearings
- radial forces must be supported by a separate radial bearing ➤*355|3*
- axial forces occur in both directions and a close axial guidance is required in conjunction with a small bearing width, e.g. in gearbox engineering

For an overview of other product-specific features, see the Matrix for bearing preselection ➤*353*.



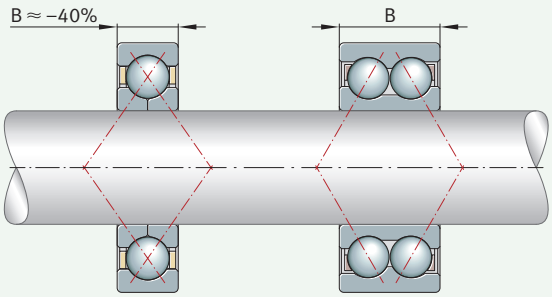

1 Four point contact bearing and double row angular contact ball bearing – comparison of design envelope

B = *bearing width*

1.1 Bearing design

✎ *Design variants*

Four point contact bearings are available as:
- bearings of basic design ➤*355|2*
- bearings with retaining slots in the outer ring ➤*355|3*
- X-life bearings ➤*355*

Bearings of basic design

✎ *Comparable, in terms of product design, with single row radial angular contact ball bearings*

Four point contact bearings are single row, non-self-retaining radial ball bearings. They are similar in their structure to single row radial angular contact ball bearings; the raceways on the inner rings are, however, designed such that they can support axial loads in both directions ➤*355|2* and ➤*356|1.2*. The centre points of curvature of the arc-shaped raceways on the inner and outer ring are offset relative to each other in such a way that the balls are in contact with the bearing rings at four points under radial load ➤*355|2* and ➤*356|1.2*.

✎ *Smaller axial section height than double row angular contact ball bearings*

These bearings have solid outer rings, split inner rings and ball and cage assemblies with brass or polyamide cages ➤*359|1.9*. The two-piece inner ring allows a large complement of balls to be accommodated in the bearing. The inner ring halves are matched to the particular bearing and must not be interchanged with those of other bearings of the same size. In an axial direction, four point contact bearings are considerably narrower than, for example, double row angular contact ball bearings.

2
Four point contact bearing of basic design

- α = *nominal contact angle*
- M_1, M_2 = *centres of curvature of outer ring raceway*
- F_r = *radial load*
- F_a = *axial load*

① *Four point contact bearing, split inner ring, without retaining slots in the outer ring*
② *Raceway geometry*

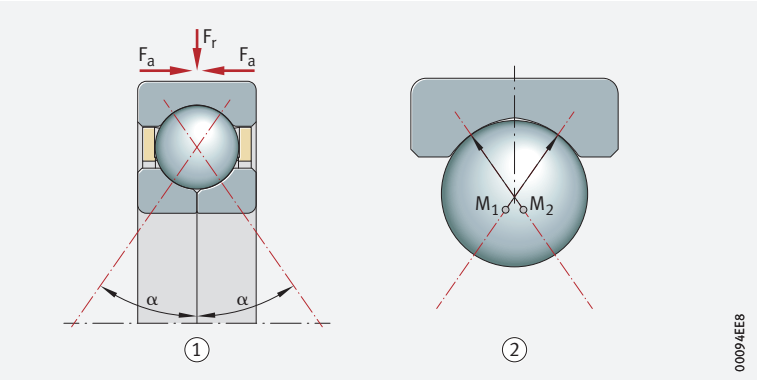

Bearings with retaining slots in the outer ring

The retaining slots allow simple location of the bearing in the housing

Four point contact bearings are often combined with a radial bearing and used as an axial bearing with radial clearance in a housing ➤*355*|*3*, ➤*362*|*1.16*. For quick and secure location of the bearings in the housing, larger bearings therefore have two retaining slots in one end face of the outer ring offset by 180° ➤*355*|*3*. Locking pins engage in these retaining slots and locate the outer ring in the housing.

3
Four point contact bearing used as an axial bearing, radial clearance on outer ring, axial force flow

① *Cylindrical roller bearing (radial bearing)*
② *Four point contact bearing with retaining slots in outer ring (axial bearing, outer ring not radially retained)*
③ *Locking pin for location of outer ring*

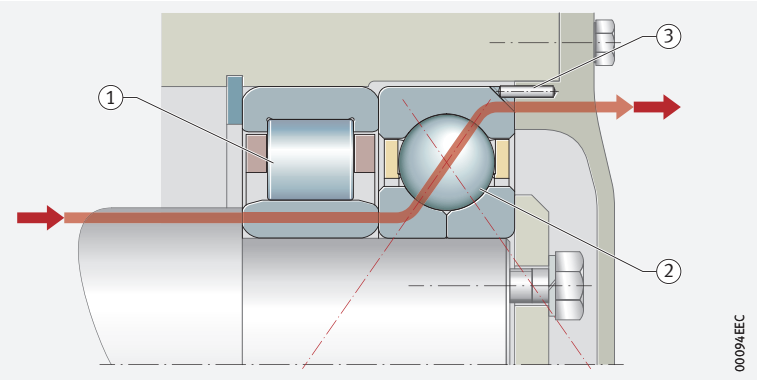

X-life premium quality

X-life

Four point contact bearings are available in certain sizes as X-life bearings. These bearings exhibit considerably higher performance than standard four point contact bearings ➤*356*|*4*. This is achieved, for example, through the modified internal construction, higher surface quality of the contact surfaces and optimised cage design, as well as through the improved quality of the steel and rolling elements.

Advantages

Increased customer benefits due to X-life

The technical enhancements offer a range of advantages, such as:

- a more favourable load distribution in the bearing and thus a higher dynamic load carrying capacity of the bearings ➤*290*|*6*
- quieter running
- running with reduced friction and greater energy efficiency
- lower heat generation in the bearing
- higher possible speeds
- lower lubricant consumption and, consequently, longer maintenance intervals
- a measurably longer operating life
- high operational security
- compact, environmentally-friendly bearing arrangements

Lower operating costs, higher machine availability

In conclusion, these advantages improve the overall cost-efficiency of the bearing position significantly and thus bring about a sustainable increase in the efficiency of the machine and equipment.

Suffix XL

X-life four point contact bearings include the suffix XL in the designation ➤*360*| 4, ➤*360*| 6 and ➤*366*|.

4
Comparison of basic dynamic load rating C_r – bearing series QJ3..-XL, bore code 5 to 14, with a bearing which is not of X-life quality

C_r = *basic dynamic load rating*

① *Bore code*

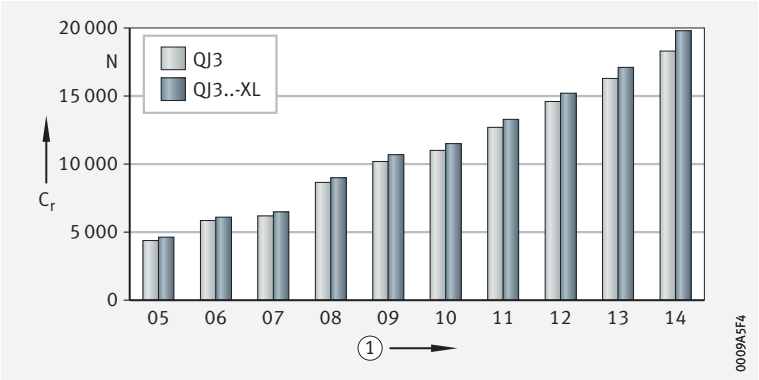

Areas of application

Wide application range

Due to their special technical features, X-life four point contact bearings are highly suitable for bearing arrangements in:

- compressors
- fluid and hydraulic pumps
- automotive chassis and gearboxes
- gearboxes for industrial, rail and wind turbine applications
- agricultural vehicles and equipment

X-life indicates a high product performance density and thus a particularly significant benefit to the customer. Further information on X-life ➤*10*.

1.2 Load carrying capacity

Capable of supporting high axial loads in both directions

Due to the design of the raceways with their high shoulders, the large nominal contact angle of $\alpha_0 = 35°$ and the large number of rolling elements, four point contact bearings have a very high axial load carrying capacity. They are suitable for alternating, purely axial loads or predominantly axial load. The balls are in contact with the inner ring and outer ring each at one point only, as is the case with a single row angular contact ball bearing under axial load ➤*355*| 2.

The radial load carrying capacity of the bearings is low. If predominantly radial load is present, four point contact bearings should not be used due to the higher friction in the four point contact.

1.3 Compensation of angular misalignments

Four point contact bearings cannot compensate misalignments

Four point contact bearings are not suitable for the compensation of angular misalignments due to housing deformations or shaft deflections. The possible skewing of the inner ring in relation to the outer ring depends, for example, on the bearing load, the operating clearance and the bearing size, and is very small.

Skewing of the bearing rings increases the running noise, places increased strain on the cages and has a harmful influence on the operating life of the bearings.

1.4 Lubrication

Oil or grease lubrication

The bearings are not greased. They must be lubricated with oil or grease.

Compatibility with plastic cages

When using bearings with plastic cages, compatibility between the lubricant and the cage material must be ensured if synthetic oils, lubricating greases with a synthetic oil base or lubricants containing a high proportion of EP additives are used.

Observe oil change intervals

Aged oil and additives in the oil can impair the operating life of plastics at high temperatures. As a result, stipulated oil change intervals must be strictly observed.

1.5 Sealing

The bearings are of an open design

Four point contact bearings are supplied without seals. As a result, sealing of the bearing position must be carried out in the adjacent construction. The sealing system should reliably prevent:

- moisture and contaminants from entering the bearing
- the egress of lubricant from the bearing

1.6 Speeds

Higher speeds are only possible under purely axial load

Due to the four point contact and resulting higher level of friction, the speed suitability of the bearings is heavily restricted under radial load. Higher speeds can only be achieved if four point contact ball bearings are subjected to purely axial load.

Speeds in the product tables

The product tables generally give two speeds for the bearings:

- the kinematic limiting speed n_G
- the thermal speed rating $n_{\vartheta r}$

Limiting speeds

The limiting speed n_G is the kinematically permissible speed of the bearing. Even under favourable mounting and operating conditions, this value should not be exceeded without prior consultation with Schaeffler ➤64.

The values in the product tables are valid for oil lubrication.

Bearings with solid brass cages have a significantly higher limiting speed for oil lubrication.

Values for grease lubrication

For grease lubrication, 75% of the value stated in the product tables is permissible in each case.

For the grease lubrication of bearings with solid brass cages, 58% of the value stated in the product tables is permissible in each case.

Reference speeds

$n_{\vartheta r}$ is used to calculate n_{ϑ}

The thermal speed rating $n_{\vartheta r}$ is not an application-oriented speed limit, but is a calculated ancillary value for determining the thermally safe operating speed n_{ϑ} ➤64.

1.7 Noise

The Schaeffler Noise Index (SGI) has been developed as a new feature for comparing the noise level of different bearing types and series. As a result, a noise evaluation of rolling bearings can now be carried out for the first time.

Schaeffler Noise Index

The SGI value is based on the maximum permissible noise level of a bearing in accordance with internal standards, which is calculated on the basis of ISO 15242. In order that different bearing types and series can be compared, the SGI value is plotted against the basic static load rating C_0.

This permits direct comparisons between bearings with the same load carrying capacity. The upper limit value is given in each of the diagrams. This means that the average noise level of the bearings is lower than illustrated in the diagram.

The Schaeffler Noise Index is an additional performance characteristic in the selection of bearings for noise-sensitive applications. The specific suitability of a bearing for an application in terms of installation space, load carrying capacity or speed limit for example, must be checked independently of this.

The Noise Index is currently available for the main series. Additional series will be updated and introduced in subsequent publications.

Further information:

- ***medias*** *https://medias.schaeffler.com*

5
Schaeffler Noise Index for four point contact bearings

SGI = *Schaeffler Noise Index*
C_0 = *basic static load rating*

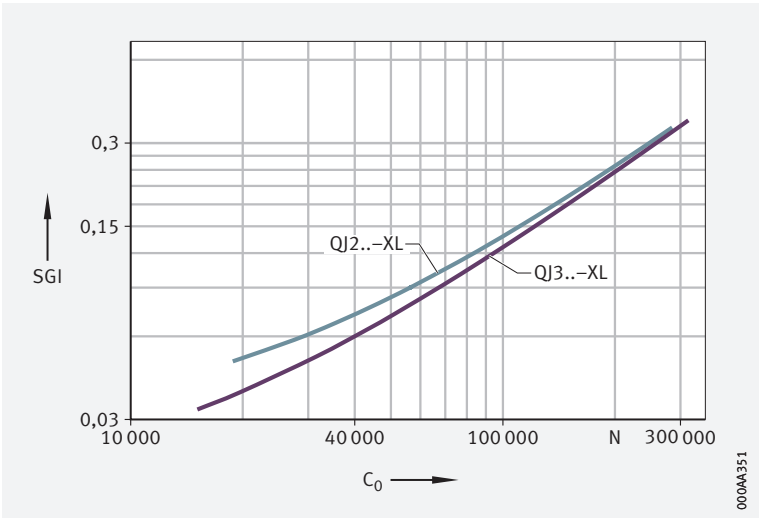

1.8 Temperature range

Limiting values

The operating temperature of the bearings is limited by:

- the dimensional stability of the bearing rings and rolling elements
- the cage
- the lubricant

Possible operating temperatures of four point contact bearings ➤*358*| ▦ *1*.

1
Permissible temperature ranges

Operating temperature	Four point contact bearings	
	with brass cage	with polyamide cage PA66
	–30 °C to +150 °C, for D > 240 mm up to +200 °C	–30 °C to +120 °C

In the event of anticipated temperatures which lie outside the stated values, please contact Schaeffler.

1.9 Cages

Solid cages made from brass and polyamide PA66 are used as standard

Standard cages and additional designs for four point contact bearings ➤*359*| ▦ *2*. Other cage designs are available by agreement. With such cages, however, suitability for high speeds and temperatures as well as the basic load ratings may differ from the values for the bearings with standard cages.

For high continuous temperatures and applications with difficult operating conditions, bearings with brass or sheet steel cages should be used. If there is any uncertainty regarding cage suitability, please consult Schaeffler.

▦ *2*
Cage, cage suffix, bore code

Bearing series	Solid brass cage MPA		Solid cage made from polyamide PA66 TVP	
	standard	also available for	standard	also available for
	Bore code			
QJ10	12, 17, 19, 21, 22, 24, 26, 30 to 40	–	–	–
QJ2	up to 08, 10, 13, 16, 17, from 19	09, 11, 12, 14, 15, 18	09, 11,12, 14, 15, 18	08
QJ3	03, 04, from 10	05 to 09	05 to 09	–

1.10 Internal clearance

Axial internal clearance

The standard is CN

Four point contact bearings are manufactured as standard with axial internal clearance CN (normal) ➤*359*| ▦ *3*. CN is not stated in the designation.

Certain sizes are also available by agreement with the smaller internal clearance C2 and with the larger internal clearance C3 and C4.

The values for axial internal clearance correspond to DIN 628-4:2008 (ISO 5753-2:2010) ➤*359*| ▦ *3*. They are valid for bearings which are free from load and measurement forces (without elastic deformation).

▦ *3*
Axial internal clearance of four point contact bearings

Nominal bore diameter d mm		Axial internal clearance							
		C2 (Group 2) µm		CN (Group N) µm		C3 (Group 3) µm		C4 (Group 4) µm	
over	incl.	min.	max.	min.	max.	min.	max.	min.	max.
10	18	15	65	50	95	85	130	120	165
18	40	25	75	65	110	100	150	135	185
40	60	35	85	75	125	110	165	150	200
60	80	45	100	85	140	125	175	165	215
80	100	55	110	95	150	135	190	180	235
100	140	70	130	115	175	160	220	205	265
140	180	90	155	135	200	185	250	235	300
180	220	105	175	155	225	210	280	260	330

1.11 Dimensions, tolerances

Dimension standards

The main dimensions of four point contact bearings correspond to DIN 628-4:2008. Nominal dimensions of four point contact bearings ➤366|.

Chamfer dimensions

The limiting dimensions for chamfer dimensions correspond to DIN 620-6:2004. Overview and limiting values ➤137|7.11. Nominal value of chamfer dimension ➤366|.

Tolerances

The tolerances for the dimensional and running accuracy of four point contact bearings correspond to tolerance class Normal in accordance with ISO 492:2014. Tolerance values in accordance with ISO 492 ➤124|8.

Retaining slots

The dimensions and tolerances of the retaining slots are based on ISO 20515:2021 bzw. DIN 628-4:2008.

1.12 Suffixes

Suffixes describe the design and features of a bearing in more detail.

4 *Suffixes and corresponding descriptions*

Suffix	Description of suffix	
C2	Axial internal clearance C2 (smaller than normal)	Special design, available by agreement
C3	Axial internal clearance C3 (larger than normal)	
C4	Axial internal clearance C4 (larger than C3)	
MPA	Solid brass cage, guided on outer ring	Standard, cage material dependent on bearing series and bore code
TVP	Solid cage made from glass fibre reinforced polyamide PA66	
XL	X-life bearing	Standard, dependent on bore code and bearing type
N2	Two retaining slots in outer ring	Standard for larger bearings

1.13 Structure of bearing designation

With ***medias*** interchange, equivalent Schaeffler bearing designations can be determined for bearing designations from other rolling bearing manufacturers *https://www.schaeffler.de/std/1B69*.

✎ *Example of composition of bearing designation*

The designation of bearings follows a set model. For an example ➤360|6. The composition of designations is subject to DIN 623-1 ➤102|10.

6 *Four point contact bearing with two retaining slots in the outer ring: designation structure*

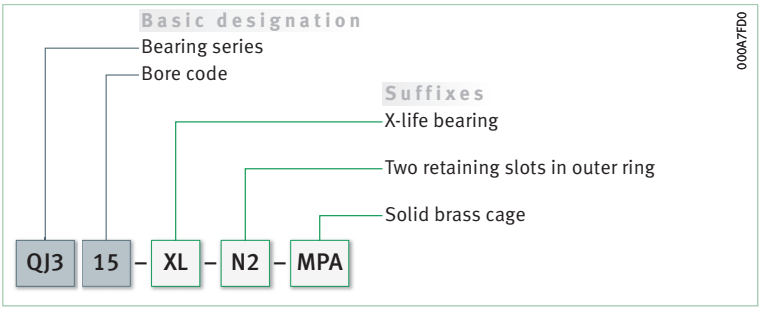

1.14 Dimensioning

Equivalent dynamic bearing load

✎ *P = F_r under purely radial load of constant magnitude and direction*

The basic rating life equation $L = (C_r/P)^p$ used in the dimensioning of bearings under dynamic load assumes a load of constant magnitude and direction. In radial bearings, this is a purely radial load F_r. If this condition is met, the bearing load F_r is used in the rating life equation for P ($P = F_r$).

✎ *P is a substitute force for combined load and various load cases*

If this condition is not met, a constant radial force must first be determined for the rating life calculation that (in relation to the rating life) represents an equivalent load. This force is known as the equivalent dynamic bearing load P.

✎ *$F_a/F_r \leqq 0{,}95$ or $F_a/F_r > 0{,}95$*

The calculation of P is dependent on the load ratio F_a/F_r and the factor 0,95 ➤*361*| *1* and ➤*361*| *2*.

1 *Equivalent dynamic load*

$$\frac{F_a}{F_r} \leqq 0{,}95 \quad \Rightarrow \quad P = F_r + 0{,}66 \cdot F_a$$

2 *Equivalent dynamic load*

$$\frac{F_a}{F_r} > 0{,}95 \quad \Rightarrow \quad P = 0{,}6 \cdot F_r + 1{,}07 \cdot F_a$$

Legend

P	N	Equivalent dynamic bearing load
F_r	N	Radial load
F_a	N	Axial load.

Equivalent static bearing load

For four point contact bearings under static load ➤*361*| *3*.

3 *Equivalent static load*

$$P_0 = F_{0r} + 0{,}58 \cdot F_{0a}$$

Legend

P_0	N	Equivalent static bearing load
F_{0r}, F_{0a}	N	Largest radial or axial load present (maximum load).

Static load safety factor

✎ *$S_0 = C_0/P_0$*

In addition to the basic rating life L (L_{10h}), it is also always necessary to check the static load safety factor S_0 ➤*361*| *4*.

4 *Static load safety factor*

$$S_0 = \frac{C_0}{P_0}$$

Legend

S_0	–	Static load safety factor
C_0	N	Basic static load rating
P_0	N	Equivalent static bearing load.

1.15 Minimum load

✎ *In order to prevent damage due to slippage, a minimum axial load of $F_a \geqq 1{,}2 \cdot F_r$ is required*

In order to ensure low friction in the bearing, especially at high speeds, a minimum axial load is required. In order to prevent an excessive increase in friction in the bearing, the axial force should be sufficiently high that the rolling elements are in contact with the inner and outer ring raceway at only one point. This is ensured if $F_a \geqq 1{,}2 \cdot F_r$.

1.16 Design of bearing arrangements

Used as axial bearing

If a four point contact bearing is used as a pure axial bearing, the outer ring must have a large radial clearance in the housing, in order that the bearing is not subjected to radial load ➤355|3.

Support bearing rings over their entire circumference and width

In order to allow full utilisation of the load carrying capacity of the bearings and thus also achieve the requisite rating life, the bearing rings must be rigidly and uniformly supported by means of contact surfaces over their entire circumference and over the entire width of the raceway (not applicable to bearings with radially relieved outer rings). The seating and contact surfaces should not be interrupted by grooves, holes or other recesses. The accuracy of mating parts must meet specific requirements ➤363|5 to ➤363|7.

Radial location of bearings – fit recommendations

For secure radial location, tight fits are necessary

In addition to supporting the rings adequately, the bearings must also be securely located in a radial direction, to prevent creep of the bearing rings on the mating parts under load. This is generally achieved by means of tight fits between the bearing rings and the mating parts. If the rings are not secured adequately or correctly, this can cause severe damage to the bearings and adjacent machine parts. Influencing factors, such as the conditions of rotation, magnitude of the load, internal clearance, temperature conditions, design of the mating parts and the mounting and dismounting options must be taken into consideration in the selection of fits.

If shock type loads occur, tight fits (transition fit or interference fit) are required to prevent the rings from coming loose at any point. Clearance, transition or interference fits ➤152|6 and ➤160|7.

The following information provided in Technical principles must be taken into consideration in the design of bearing arrangements:

- criteria for selection of fits ➤146
- conditions of rotation ➤147
- tolerance classes for cylindrical shaft seats (radial bearings) ➤149|2
- shaft fits ➤152|6
- tolerance classes for bearing seats in housings (radial bearings) ➤150|4
- housing fits ➤160|7

Location of the outer ring by means of retaining slots

For location of the bearings in the housing by means of retaining slots and locking pin ➤355|3.

Axial location of bearings – location methods

The bearings must also be securely located in an axial direction

As a tight fit alone is not normally sufficient to also locate the bearing rings securely on the shaft and in the housing bore in an axial direction, this must usually be achieved by means of an additional axial location or retention method. The axial location of the bearing rings must be matched to the type of bearing arrangement. Shaft and housing shoulders, housing covers, nuts, spacer rings and retaining rings etc., are fundamentally suitable ➤355|3.

Dimensional, geometrical and running accuracy of the bearing seats

A minimum of IT6 should be provided for the shaft seat and a minimum of IT7 for the housing seat

The accuracy of the bearing seat on the shaft and in the housing should correspond to the accuracy of the bearing used. For four point contact bearings with the tolerance class Normal, the shaft seat should correspond to a minimum of standard tolerance grade IT6 and the housing seat to a minimum of IT7. Guide values for the geometrical and positional tolerances of bearing seating surfaces ➤363|5. Tolerances t_1 to t_3 in accordance with ➤170|11. Numerical values for IT grades ➤363|6.

5 *Guide values for the geometrical and positional tolerances of bearing seating surfaces*

Bearing tolerance class		Bearing seating surface	Standard tolerance grades to ISO 286-1 (IT grades)			
to ISO 492	to DIN 620		Diameter tolerance	Roundness tolerance t_1	Parallelism tolerance t_2	Total axial runout tolerance of abutment shoulder t_3
Normal	PN (P0)	Shaft	IT6 (IT5)	Circumferential load IT4/2	Circumferential load IT4/2	IT4
				Point load IT5/2	Point load IT5/2	
		Housing	IT7 (IT6)	Circumferential load IT5/2	Circumferential load IT5/2	IT5
				Point load IT6/2	Point load IT6/2	

6 *Numerical values for ISO standard tolerances (IT grades) to ISO 286-1:2010*

IT grade	Nominal dimension in mm							
	over	**10**	**18**	**30**	**50**	**80**	**120**	**180**	**250**
	incl.	**18**	**30**	**50**	**80**	**120**	**180**	**250**	**315**
	Values in µm								
IT4	5		6	7	8	10	12	14	16
IT5	8		9	11	13	15	18	20	23
IT6	11		13	16	19	22	25	29	32
IT7	18		21	25	30	35	40	46	52

Roughness of cylindrical bearing seating surfaces

Ra must not be too high

The roughness of the bearing seats must be matched to the tolerance class of the bearings. The mean roughness value Ra must not be too high, in order to maintain the interference loss within limits. The shafts must be ground, while the bores must be precision turned. Guide values as a function of the IT grade of bearing seating surfaces ➤*363*| 7.

7 *Roughness values for cylindrical bearing seating surfaces – guide values*

Nominal diameter of the bearing seat d (D) mm		Recommended mean roughness value for ground bearing seats Ramax µm			
		Diameter tolerance (IT grade)			
over	incl.	IT7	IT6	IT5	IT4
–	80	1,6	0,8	0,4	0,2
80	500	1,6	1,6	0,8	0,4

Mounting dimensions for the contact surfaces of bearing rings

The contact surfaces for the rings must be of sufficient height

The mounting dimensions of the shaft and housing shoulders, and spacer rings etc., must ensure that the contact surfaces for the bearing rings are of sufficient height. However, they must also reliably prevent rotating parts of the bearing from grazing stationary parts. Proven mounting dimensions for the radii and diameters of the abutment shoulders ➤*366*|. These dimensions are limiting dimensions (maximum or minimum dimensions); the actual values should not be higher or lower than specified.

1.17 Mounting and dismounting

The mounting and dismounting options for four point contact bearings, by thermal, hydraulic or mechanical methods, must be taken into consideration in the design of the bearing position.

As the bearings are not self-retaining, they are easy to mount

Four point contact bearings are not self-retaining. As a result, the outer ring with the ball and cage assembly can be mounted separately from the two inner ring halves ➤*354|1.1*. This gives simplified mounting of the bearings.

Schaeffler Mounting Handbook

Rolling bearings must be handled with great care

Rolling bearings are well-proven precision machine elements for the design of economical and reliable bearing arrangements, which offer high operational security. In order that these products can function correctly and achieve the envisaged operating life without detrimental effect, they must be handled with care.

The Schaeffler Mounting Handbook MH 1 gives comprehensive information about the correct storage, mounting, dismounting and maintenance of rotary rolling bearings *https://www.schaeffler.de/std/1D53*. It also provides information which should be observed by the designer, in relation to the mounting, dismounting and maintenance of bearings, in the original design of the bearing position. This book is available from Schaeffler on request.

1.18 Legal notice regarding data freshness

The further development of products may also result in technical changes to catalogue products

Of central interest to Schaeffler is the further development and optimisation of its products and the satisfaction of its customers. In order that you, as the customer, can keep yourself optimally informed about the progress that is being made here and with regard to the current technical status of the products, we publish any product changes which differ from the printed version in our electronic product catalogue.

We therefore reserve the right to make changes to the data and illustrations in this catalogue. This catalogue reflects the status at the time of printing. More recent publications released by us (as printed or digital media) will automatically precede this catalogue if they involve the same subject. Therefore, please always use our electronic product catalogue to check whether more up-to-date information or modification notices exist for your desired product.

Link to electronic product catalogue

The following link will take you to the Schaeffler electronic product catalogue: *https://medias.schaeffler.com*.

1.19 Further information

In addition to the data in this chapter, the following chapters in Technical principles must also be observed in the design of bearing arrangements:

- Determining the bearing size ➤*34*
- Rigidity ➤*54*
- Friction and increases in temperature ➤*56*
- Speeds ➤*64*
- Bearing data ➤*97*
- Lubrication ➤*70*
- Sealing ➤*185*
- Design of bearing arrangements ➤*141*
- Mounting and dismounting ➤*194*



Four point contact bearings

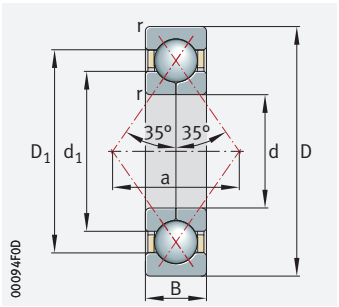

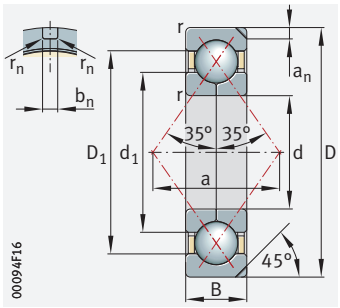

N2 variant

d = 17 – 85 mm

Main dimensions			Basic load ratings		Fatigue limit load	Limiting speed	Speed rating	Mass	Designation
d	D	B	dyn. C_r	stat. C_{0r}	C_{ur}	n_G	$n_{\vartheta r}$	m	➤360|1.12 ➤360|1.13 X-life ➤355
			N	N	N	min^{-1}	min^{-1}	≈ kg	
17	47	14	24 500	15 100	1 130	29 500	12 000	0,148	**QJ303-XL-MPA**
20	52	15	31 000	19 600	1 360	26 000	10 700	0,184	**QJ304-XL-MPA**
25	52	15	26 000	18 800	1 300	25 500	12 300	0,171	**QJ205-XL-MPA**
	62	17	46 500	31 500	2 180	14 100	8 800	0,256	**QJ305-XL-TVP**
30	62	16	37 500	27 500	1 930	21 100	10 200	0,254	**QJ206-XL-MPA**
	72	19	61 000	43 000	3 000	11 900	7 600	0,379	**QJ306-XL-TVP**
35	72	17	45 000	35 500	2 470	18 000	8 500	0,359	**QJ207-XL-MPA**
	80	21	65 000	51 000	3 500	10 800	7 000	0,516	**QJ307-XL-TVP**
40	80	18	58 000	46 500	3 250	10 600	7 500	0,399	**QJ208-XL-TVP**
	90	23	90 000	69 000	4 750	9 300	6 200	0,695	**QJ308-XL-TVP**
45	85	19	66 000	57 000	4 000	9 800	6 900	0,467	**QJ209-XL-TVP**
	100	25	107 000	83 000	6 200	8 300	5 700	0,934	**QJ309-XL-TVP**
50	90	20	62 000	56 000	3 950	13 900	6 700	0,609	**QJ210-XL-MPA**
	110	27	115 000	92 000	6 800	11 300	5 400	1,39	**QJ310-XL-MPA**
55	100	21	81 000	76 000	5 300	8 200	5 800	0,697	**QJ211-XL-TVP**
	120	29	133 000	108 000	8 100	10 300	5 000	1,76	**QJ311-XL-MPA**
60	95	18	51 000	52 000	3 600	13 100	5 800	0,42	**QJ1012-XL-MPA**
	110	22	98 000	93 000	6 600	7 400	5 300	0,889	**QJ212-XL-TVP**
	130	31	152 000	126 000	9 200	9 500	4 700	2,2	**QJ312-XL-MPA**
65	120	23	106 000	104 000	7 200	10 300	4 900	1,27	**QJ213-XL-MPA**
	140	33	171 000	145 000	10 800	8 700	4 450	2,71	**QJ313-XL-MPA**
70	125	24	123 000	122 000	9 300	6 500	4 600	1,19	**QJ214-XL-TVP**
	150	35	198 000	165 000	11 800	8 100	4 200	3,29	**QJ314-XL-MPA**
75	130	25	129 000	130 000	9 300	6 200	4 450	1,34	**QJ215-XL-TVP**
	160	37	229 000	204 000	14 400	7 600	3 900	3,95	**QJ315-XL-N2-MPA**
80	140	26	136 000	137 000	9 700	8 600	4 250	1,84	**QJ216-XL-MPA**
	170	39	226 000	220 000	11 100	7 000	3 750	4,65	**QJ316-N2-MPA**
85	130	22	86 000	95 000	6 400	9 200	4 250	1,11	**QJ1017-XL-N2-MPA**
	150	28	158 000	160 000	11 100	8 000	4 050	2,3	**QJ217-XL-MPA**
	180	41	248 000	255 000	12 800	6 600	3 550	5,53	**QJ317-N2-MPA**

medias *https://www.schaeffler.de/std/1F9A*

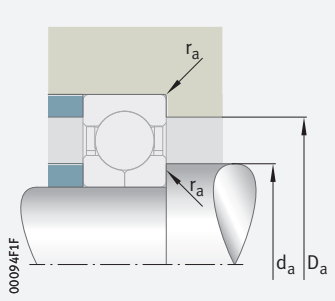

Mounting dimensions

Dimensions								Mounting dimensions		
d	r min.	D_1 ≈	d_1 ≈	a ≈	a_n	b_n	r_n	d_a min.	D_a max.	r_a max.
17	1	36,4	27,8	22	–	–	–	22,6	41,4	1
20	1,1	41,4	30,6	26	–	–	–	27	45	1
25	1	43,1	33,9	27	–	–	–	31	46	1
	1,1	49,5	37,5	31	–	–	–	32	55	1
30	1	50,7	40,4	32	–	–	–	36	56	1
	1,1	58	44	36	–	–	–	37	65	1
35	1,1	59,1	48	38	–	–	–	42	65	1
	1,5	64,8	50,8	41	–	–	–	44	71	1,5
40	1,1	66,8	53,7	42	–	–	–	47	73	1
	1,5	73,4	56,7	46	–	–	–	49	81	1,5
45	1,1	72	58,5	45	–	–	–	52	78	1
	1,5	81,7	63,4	51	–	–	–	54	91	1,5
50	1,1	76,4	63,7	49	–	–	–	57	83	1
	2	89,6	70,5	56	–	–	–	61	99	2
55	1,5	84,7	70,4	54	–	–	–	64	91	1,5
	2	97,8	77,2	61	–	–	–	66	109	2
60	1,1	83,1	72,4	54	–	–	–	66	89	1
	1,5	93	77,1	60	–	–	–	69	101	1,5
	2,1	106,9	84,2	67	–	–	–	72	118	2,1
65	1,5	101,5	84,2	65	–	–	–	74	111	1,5
	2,1	114,4	91	72	–	–	–	77	128	2,1
70	1,5	106,3	89,1	68	–	–	–	79	116	1,5
	2,1	123,6	97,7	77	–	–	–	82	138	2,1
75	1,5	111,5	93,9	72	–	–	–	84	121	1,5
	2,1	131	104,4	82	10,1	8,5	2	87	148	2,1
80	2	119,6	100,9	77	–	–	–	91	129	2
	2,1	140,8	110,7	88	10,1	8,5	2	92	158	2,1
85	1,1	114,8	101,1	75	5	6,5	0,5	91	124	1
	2	128,6	107,6	82	–	–	–	96	139	2
	3	148,7	117,9	93	11,7	10,5	2	99	166	2,5

Four point contact bearings

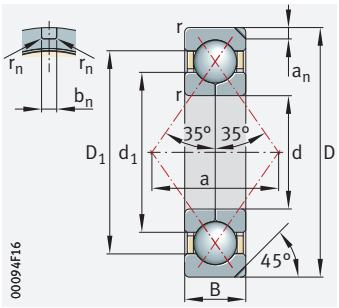

N2 variant

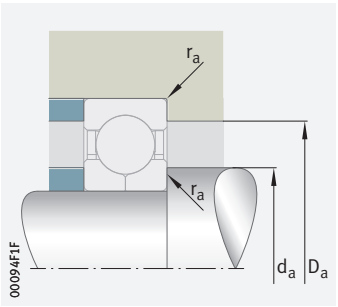

Mounting dimensions

d = 90 – 200 mm

Main dimensions			Basic load ratings		Fatigue limit load	Limiting speed	Speed rating	Mass	Designation
d	D	B	dyn. C_r	stat. C_{0r}	C_{ur}	n_G	$n_{\vartheta r}$	m	➤360|1.12 ➤360|1.13 X-life ➤355
			N	N	N	min^{-1}	min^{-1}	≈ kg	
90	160	30	189 000	198 000	12 900	4 950	3 750	2,35	**QJ218-XL-N2-TVP**
	190	43	265 000	285 000	13 300	6 300	3 350	6,31	**QJ318-N2-MPA**
95	145	24	106 000	121 000	7 600	8 200	3 850	1,56	**QJ1019-XL-N2-MPA**
	170	32	190 000	212 000	10 400	7 000	3 700	3,41	**QJ219-N2-MPA**
	200	45	285 000	315 000	14 500	5 900	3 250	7,45	**QJ319-N2-MPA**
100	180	34	224 000	241 000	11 500	6 600	3 550	4,02	**QJ220-N2-MPA**
	215	47	325 000	365 000	16 800	5 400	3 000	9,04	**QJ320-N2-MPA**
105	160	26	126 000	145 000	8 700	7 400	3 550	2,04	**QJ1021-XL-N2-MPA**
	190	36	233 000	255 000	12 000	6 200	3 450	4,81	**QJ221-N2-MPA**
110	170	28	138 000	184 000	8 100	6 900	3 350	2,52	**QJ1022-N2-MPA**
	200	38	249 000	285 000	12 700	5 900	3 350	5,66	**QJ222-N2-MPA**
	240	50	345 000	415 000	18 000	4 950	2 700	12,2	**QJ322-N2-MPA**
120	180	28	145 000	200 000	8 500	6 500	3 100	2,71	**QJ1024-N2-MPA**
	215	40	285 000	340 000	15 100	5 400	3 050	6,74	**QJ224-N2-MPA**
	260	55	385 000	485 000	19 900	4 550	2 480	15,6	**QJ324-N2-MPA**
130	230	40	295 000	370 000	15 800	5 100	2 800	7,66	**QJ226-N2-MPA**
	280	58	425 000	570 000	22 200	4 200	2 220	19,2	**QJ326-N2-MPA**
140	250	42	315 000	420 000	16 900	4 700	2 600	9,69	**QJ228-N2-MPA**
	300	62	470 000	660 000	25 500	3 900	2 030	23,2	**QJ328-N2-MPA**
150	225	35	205 000	295 000	11 200	5 100	2 650	6,17	**QJ1030-N2-MPA**
	270	45	350 000	485 000	18 900	4 350	2 360	12,2	**QJ230-N2-MPA**
	320	65	510 000	730 000	26 000	3 650	1 870	28	**QJ330-N2-MPA**
160	240	38	231 000	335 000	12 300	4 750	2 600	6,35	**QJ1032-N2-MPA**
	290	48	370 000	530 000	20 500	4 050	2 200	15,3	**QJ232-N2-MPA**
170	260	42	280 000	430 000	15 200	4 350	2 340	8,79	**QJ1034-N2-MPA**
	310	52	420 000	630 000	23 500	3 750	2 010	18,6	**QJ234-N2-MPA**
180	280	46	340 000	510 000	19 200	4 050	2 140	11,4	**QJ1036-N2-MPA**
	320	52	435 000	680 000	24 600	3 600	1 870	19,6	**QJ236-N2-MPA**
190	290	46	345 000	540 000	19 800	3 900	2 010	11,4	**QJ1038-N2-MPA**
200	310	51	390 000	620 000	22 000	3 600	1 890	15	**QJ1040-N2-MPA**

medias *https://www.schaeffler.de/std/1F9A*



Dimensions								Mounting dimensions		
d	r min.	D_1 ≈	d_1 ≈	a ≈	a_n	b_n	r_n	d_a min.	D_a max.	r_a max.
90	2	136,1	114,3	88	8,1	6,5	1	101	149	2
	3	157,1	124,5	98	11,7	10,5	2	104	176	2,5
95	1,5	128,1	112,9	84	5	6,5	0,5	102	138	1,5
	2,1	144,4	121	93	8,1	6,5	1	107	158	2,1
	3	165,4	131,2	103	11,7	10,5	2	109	186	2,5
100	2,1	153,6	127,7	98	10,1	8,5	2	112	168	2,1
	3	176,6	139	110	11,7	10,5	2	114	201	2,5
105	2	141,5	124,6	93	6,5	6,5	0,5	114	151	2
	2,1	161,6	134,8	103	10,1	8,5	2	117	178	2,1
110	2	149,8	131,3	98	6,5	6,5	0,5	119	161	2
	2,1	169,8	141,7	109	10,1	8,5	2	122	188	2,1
	3	195,5	156,5	123	11,7	10,5	2	124	226	2,5
120	2	159,2	141,3	105	6,5	6,5	0,5	129	171	2
	2,1	183,7	152,8	117	11,7	10,5	2	132	203	2,1
	3	210,6	169,9	133	11,7	10,5	2	134	246	2,5
130	3	196,2	165,4	127	11,7	10,5	2	144	216	2,5
	4	228	184,1	144	12,7	10,5	2	147	263	3
140	3	210,5	180	137	11,7	10,5	2	154	236	2,5
	4	243	197,5	154	12,7	10,5	2	157	283	3
150	2,1	199,4	176,8	131	8,1	6,5	1	160,2	214,8	2,1
	3	226,7	193,8	147	11,7	10,5	2	164	256	2,5
	4	261	211,2	165	12,7	10,5	2	167	303	3
160	2,1	212,8	188,5	140	10,1	8,5	2	170	230	2,1
	3	240	208,1	158	12,7	10,5	2	174	276	2,5
170	2,1	229,5	201,9	151	11,7	10,5	2	180,2	249,8	2,1
	4	260,5	221,5	168	12,7	10,5	2	187	293	3
180	2,1	245	215,5	161	11,7	10,5	2	190,2	269,8	2,1
	4	269	231	175	12,7	10,5	2	197	303	3
190	2,1	256,2	225,3	168	11,7	10,5	2	200,2	279,8	2,1
200	2,1	271,5	238,9	179	12,7	10,5	2	210,2	299,8	2,1

Self-aligning ball bearings



Matrix for bearing preselection ____ 373

1 Self-aligning ball bearings ____ 374

1.1 Bearing design ____ 374
1.2 Load carrying capacity ____ 376
1.3 Compensation of angular misalignments ____ 376
1.4 Lubrication ____ 377
1.5 Sealing ____ 377
1.6 Speeds ____ 378

FAG

1.7 Noise *378*
1.8 Temperature range *378*
1.9 Cages *379*
1.10 Internal clearance *379*
1.11 Dimensions, tolerances *380*
1.12 Suffixes *381*
1.13 Structure of bearing designation *381*
1.14 Dimensioning *382*
1.15 Minimum load *382*
1.16 Design of bearing arrangements *383*
1.17 Mounting and dismounting *387*
1.18 Legal notice regarding data freshness *388*
1.19 Further information *388*

Product tables *390*

Self-aligning ball bearings with cylindrical or tapered bore *390*
Self-aligning ball bearings with extended inner ring *404*
Self-aligning ball bearings with adapter sleeve *406*

Matrix for bearing preselection

The matrix gives an overview of the types and design features.

It can be used to make a preliminary assessment of whether a bearing is fundamentally suitable for the envisaged application.

The additional information provided in the product chapter (see column "detailed information") and in the Technical principles must, however, be observed in addition to this overview in selection of the bearing.

+++ extremely suitable
++ highly suitable
+ suitable
(+) suitable with restrictions
– not suitable/not applicable
✓ available

Design features and suitability			Self-aligning ball bearings			
			cylindrical or tapered bore	with extended inner ring	with adapter sleeve	detailed information ➤ 374
Load carrying capacity	radial		++	++	++	➤ 376|1.2
	axial, one direction		(+)	(+)	(+)	➤ 376|1.2
	axial, both directions		(+)	(+)	(+)	➤ 376|1.2
	moments		–	–	–	
Compensation of angular misalignments	static		+++	+++	+++	➤ 376|1.3
	dynamic		+++	+++	+++	➤ 376|1.3
Bearing design	cylindrical bore		✓	✓	✓	➤ 374|1.1
	tapered bore		✓	–	–	➤ 374|1.1
	separable		–	–	–	➤ 387|1.17
Lubrication	greased		✓[1]	–	✓[1]	➤ 377|1.4
Sealing	open		✓	✓	✓	➤ 377|1.5
	non-contact		–	–	–	
	contact		✓	–	✓	➤ 377|1.5
Operating temperature in °C	from to		–30 +150[2]	–30 +150	–30 +150[2]	➤ 378|1.8
Suitability for	high speeds		+	+	+	➤ 378|1.6
	high running accuracy		–	–	–	➤ 380|1.11 ➤ 115
	low-noise running		(+)	(+)	(+)	➤ 378|1.7 ➤ 27
	high rigidity		(+)	(+)	(+)	➤ 54
	reduced friction		++	++	++	➤ 56
	length compensation within bearing		–	–	–	
	non-locating bearing arrangement		+	+	+	➤ 141
	locating bearing arrangement		+	+	+	➤ 141
X-life design		X-life	–	–	–	
Bearing bore[3] d in mm	from to		5 150	20 60	17 100	➤ 390
Product tables	from page ➤		390	404	406	

1) Sealed bearings only
2) Valid for open bearings with brass cage
3) For bearings with adapter sleeve: inside diameter of adapter sleeve

1 Self-aligning ball bearings

Self-aligning ball bearings are particularly suitable:
- if there is skewing between the outer and inner ring (for the compensation of angular misalignments) ➤*376|1.3*
- for bearing arrangements with high radial loads ➤*376|1.2*
- for higher speeds on account of their point contact, than barrel roller bearings with line contact
- where bearings with the above-mentioned characteristics are expected to run more quietly and at lower temperatures, even at high speeds

For an overview of other product-specific features, see the Matrix for bearing preselection ➤*373*.

1 *Self-aligning ball bearing: speed comparison with barrel roller bearing, compensation of misalignments*

n_G = *limiting speed*

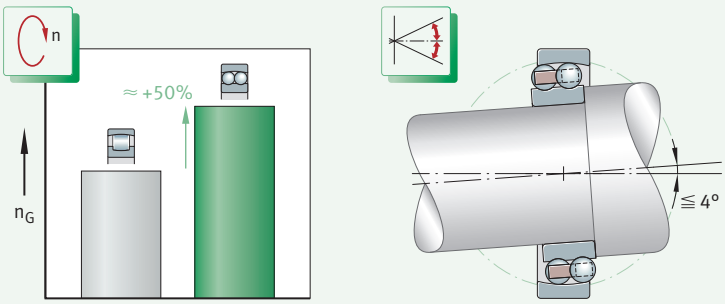

1.1 Bearing design

✎ *Design variants*

Self-aligning ball bearings are available as:
- bearings of basic design ➤*375|2*
- bearings with extended inner ring and locating slot ➤*375|3*
- bearings with adapter sleeve ➤*375|4*
- bearings with ball projection ➤*376|5*

Bearings of basic design

✎ *The outer ring has a curved raceway*

Self-aligning ball bearings are double row, self-retaining radial ball bearings, which are part of the group of self-aligning bearings. The outer ring has a single concave raceway for the two rows of balls. As a result, the bearings permit the compensation of static and dynamic angular misalignments (skewing between the inner and outer ring) within certain limits ➤*376|1.3*. The inner ring has two formed raceway grooves in which the rolling elements run. Solid cages made from polyamide PA66 or brass are used ➤*379|2*.

✎ *The bore is cylindrical or tapered*

Bearings of basic design are supplied with a cylindrical bore; self-aligning ball bearings of series 12, 13, 22 and 23 are also available with a tapered bore ➤*375|2*.

DIN ISO

Bearings with a tapered bore have a bore taper of 1:12 and the suffix K ➤*381|5*.

2
Self-aligning ball bearings of basic design

F_r = *radial load*
F_a = *axial load*

① *Self-aligning ball bearing with cylindrical bore, open*
② *Self-aligning ball bearing with tapered bore, open, bore taper 1:12*

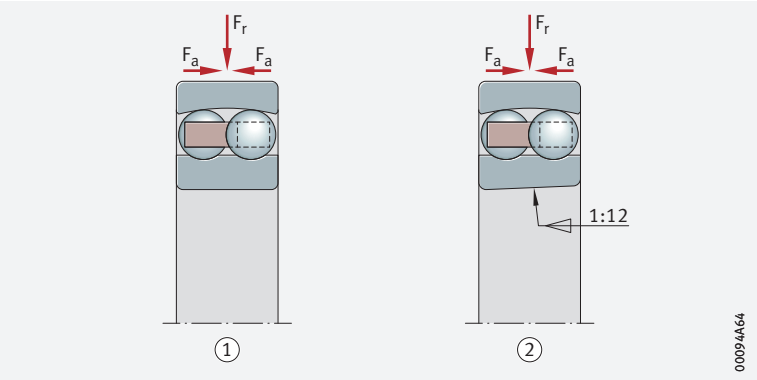

Bearings with extended inner ring and locating slot

Suitable for simple bearing arrangements

Self-aligning ball bearings of series 112 have an extended inner ring with cylindrical bore on both sides and a slot on one side of the inner ring ➤*375*|*3*. These bearings are particularly suitable for simple bearing arrangements with conventional shafts. Due to the bearing bore tolerance J7, mounting and dismounting of this type is very simple. The slot is used to locate the bearings in an axial direction by means of a grub screw; ➤*384*|*8*.

3
Self-aligning ball bearing with extended inner ring and locating slot

F_r = *radial load*
F_a = *axial load*

① *Locating slot*

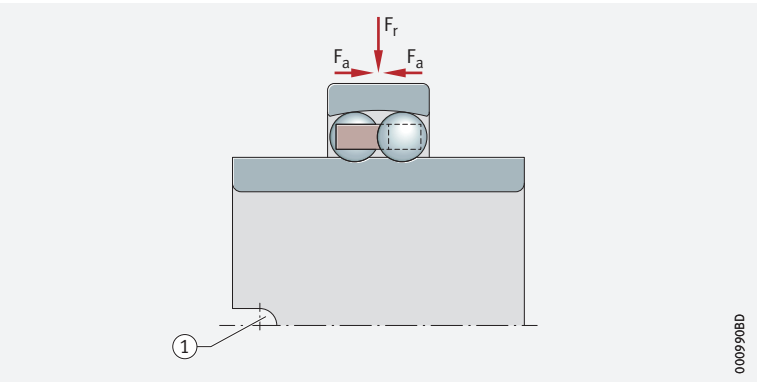

Bearings with adapter sleeve

Ready-to-fit bearing mounting kits facilitate the ordering and mounting of self-aligning ball bearings

Complete bearing mounting kits are also available for use in locating self-aligning ball bearings with a tapered bore on a cylindrical shaft journal. These units comprise the bearing, slotted adapter sleeve, tab washer and locknut (series 12..-K + H, 13..-K + H, 22..-K + H, 23..-K + H, 22..-K-2RS + H) ➤*375*|*4*. Adapter sleeves allow bearings to be located on smooth and stepped shafts. The adapter sleeves must also be stated when placing the order. Ordering example ➤*381*|*7*.

4
Self-aligning ball bearings with adapter sleeve

F_r = *radial load*
F_a = *axial load*

① *Self-aligning ball bearing, open*
② *Self-aligning ball bearing, lip seal on both sides*
③ *Adapter sleeve*
④ *Locknut*
⑤ *Tab washer*

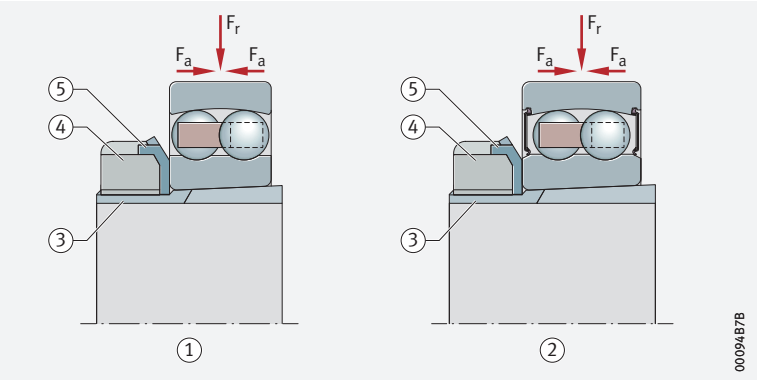

Bearings with ball projection

The dimension C_1 must be observed

In some self-aligning ball bearings with a brass cage (bearings with the suffix M), the balls project to a certain extent at the sides ➤376|5.

The projection is marked C_1 in the product tables. This must be taken into consideration when defining the dimensions for the adjacent parts.

5
Self-aligning ball bearing with ball projection

C_1 = *ball projection*

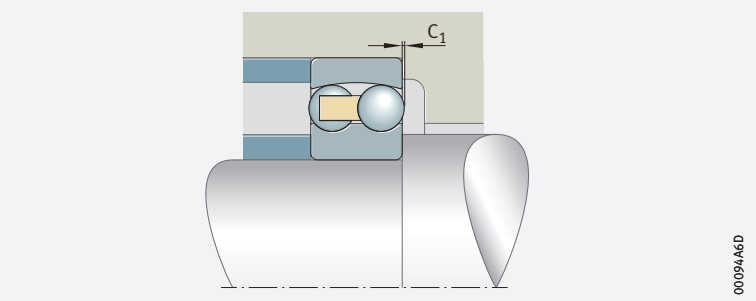

1.2 Load carrying capacity

Suitable for high radial and low axial loads

In addition to high radial forces, self-aligning ball bearings also support low axial forces from both directions ➤375|2 to ➤375|4. Due to the point contact with which the rolling elements are in contact with the raceways, the radial load carrying capacity of the bearings is lower than for barrel roller bearings with line contact.

Axial load carrying capacity of bearings with adapter sleeve

Where bearings with adapter sleeves are located on a smooth shaft without a fixed stop (e.g. rigid shoulder), their axial load carrying capacity is dependent on the friction between the shaft and the sleeve.

If there is any doubt about the axial load carrying capacity of the location method, please consult Schaeffler.

1.3 Compensation of angular misalignments

Self-aligning ball bearings compensate dynamic and static angular misalignments

Due to the concave rolling element raceway in the outer ring, self-aligning ball bearings are capable of angular adjustment. As a result, they permit skewing between the outer and inner ring within certain limits, without causing damage to the bearings, and can thus compensate misalignments, shaft deflections and housing deformations.

Permissible adjustment angle

With a rotating inner ring, self-aligning ball bearings can swivel up to 4° from their central position

Under normal operating conditions and with a rotating inner ring, self-aligning ball bearings can swivel up to 4° from their central position, whereas sealed bearings can swivel up to 1,5°. The extent to which these values can be used in practice is, however, essentially dependent on the design of the bearing arrangement.

If the outer ring rotates or the inner ring undergoes tumbling motion, the angular adjustment facility is considerably smaller. In such cases, please consult Schaeffler.

1.4 Lubrication

Greased bearings are maintenance-free

Sealed self-aligning ball bearings are lubricated with a high quality lithium soap grease with a mineral oil base, which has good anti-corrosion characteristics. The grease filling is measured so that it is sufficient for the entire life of the bearing. As a result, these bearings are maintenance-free.

Do not wash greased bearings out prior to mounting. If mounting is carried out using thermal tools, the bearings should not be heated to a temperature in excess of +80 °C, taking account of the grease filling and seal material. If higher heating temperatures are required, it must be ensured that the permissible upper temperature limits for grease and seals are not exceeded.

Schaeffler recommends the use of induction heating devices for heating purposes ➤*388*.

Lubrication for ungreased bearings

Open bearings are not greased. They can be lubricated from the end faces using oil or grease.

Compatibility with plastic cages

When using bearings with plastic cages, compatibility between the lubricant and the cage material must be ensured if synthetic oils, lubricating greases with a synthetic oil base or lubricants containing a high proportion of EP additives are used.

Observe oil change intervals

Aged oil and additives in the oil can impair the operating life of plastics at high temperatures. As a result, stipulated oil change intervals must be strictly observed.

1.5 Sealing

Also available with lip seals

Self-aligning ball bearings of series 22 and 23 are also available with contact seals on both sides of the bearing ➤*375*|*4*. The integration of such seals into the bearing provides a compact, economical and reliable solution for the sealing of bearing arrangements. In order that the highest possible sealing effect can still be achieved with minimum friction, the seal lips are in contact with the ground opposing running surface of the inner ring under light pressure. The sealing material used is the proven, oil-resistant and wear-resistant elastomer material NBR. Sealed self-aligning ball bearings have the suffix 2RS ➤*381*|*5*.

Sealing can be achieved in the adjacent construction, if the bearings are open

In the case of unsealed bearings, sealing of the bearing position must be carried out in the adjacent construction. The sealing system should reliably prevent:

- moisture and contaminants from entering the bearing
- the egress of lubricant from the bearing

1.6 Speeds

Speeds in the product tables

The product tables generally give two speeds for the bearings:
- the kinematic limiting speed n_G
- the thermal speed rating $n_{\vartheta r}$

Limiting speeds

The limiting speed n_G is the kinematically permissible speed of the bearing. Even under favourable mounting and operating conditions, this value should not be exceeded without prior consultation with Schaeffler ➤64.

The values given in the product tables are valid for oil lubrication in the case of bearings without seals and for grease lubrication where bearings are supplied greased and with seals.

Bearings with solid brass cages have a significantly higher limiting speed for oil lubrication.

Values for grease lubrication

For the grease lubrication of bearings without seals or shields, 85% of the value stated in the product tables is permissible in each case.

For the grease lubrication of bearings with solid brass cages, 65% of the value stated in the product tables is permissible in each case.

Reference speeds

$n_{\vartheta r}$ is used to calculate n_ϑ

The thermal speed rating $n_{\vartheta r}$ is not an application-oriented speed limit, but is a calculated ancillary value for determining the thermally safe operating speed n_ϑ ➤64.

Bearings with contact seals

For bearings with contact seals, no reference speeds are defined in accordance with DIN ISO 15312:2004. As a result, only the limiting speed n_G is given in the product tables for these bearings.

1.7 Noise

Schaeffler Noise Index

The Schaeffler Noise Index (SGI) is not yet available for this bearing type ➤69. The data for these bearing series will be introduced and updated in stages.

Further information:
- ***medias*** *https://medias.schaeffler.com*

1.8 Temperature range

Limiting values

The operating temperature of the bearings is limited by:
- the dimensional stability of the bearing rings and rolling elements
- the cage
- the lubricant
- the seals

Possible operating temperatures of self-aligning ball bearings ➤378|▦1.

▦1
Permissible temperature ranges

Operating temperature	Open self-aligning ball bearings		Sealed self-aligning ball bearings
	with brass cage	with polyamide cage PA66	
	–30 °C to +150 °C	–30 °C to +120 °C	–30 °C to +100 °C, limited by the lubricant and seal material

In the event of anticipated temperatures which lie outside the stated values, please contact Schaeffler.

1.9 Cages

Solid cages made from brass and polyamide PA66 are used as standard

Standard cages and additional cage designs for self-aligning ball bearings ➤*379*|▦*2*. Other cage designs are available by agreement. With such cages, however, suitability for high speeds and temperatures as well as the basic load ratings may differ from the values for the bearings with standard cages.

For high continuous temperatures and applications with difficult operating conditions, bearings with brass or sheet steel cages should be used. If there is any uncertainty regarding cage suitability, please consult Schaeffler.

▦*2*
Cage, cage suffix, bore code

Bearing series	Solid cage made from polyamide PA66 TVH	Solid brass cage M	
	standard	standard	also available for
	Bore code		
10	8	–	–
12	up to 18	from 19	–
13	up to 13	from 14	03
22	up to 16, 18	17, from 19	12, 14
23	up to 13	from 14	05 to 10, 12, 13
112	04 to 12	–	–

1.10 Internal clearance

Radial internal clearance – bearings with cylindrical bore

The standard is CN

Self-aligning ball bearings with cylindrical bore are manufactured as standard with radial internal clearance CN (normal) ➤*379*|▦*3*. CN is not stated in the designation.

Certain sizes are also available by agreement with the larger internal clearance C3.

The values for radial internal clearance correspond to DIN 620-4:2004 (ISO 5753-1:2009) ➤*379*|▦*3*. They are valid for bearings which are free from load and measurement forces (without elastic deformation).

▦*3*
Radial internal clearance of self-aligning ball bearings with cylindrical bore

Nominal bore diameter d mm		Radial internal clearance CN (Group N) µm		C3 (Group 3) µm	
over	incl.	min.	max.	min.	max.
–	6	5	15	10	20
6	10	6	17	12	25
10	14	6	19	13	26
14	18	8	21	15	28
18	24	10	23	17	30
24	30	11	24	19	35
30	40	13	29	23	40
40	50	14	31	25	44
50	65	16	36	30	50
65	80	18	40	35	60
80	100	22	48	42	70
100	120	25	56	50	83
120	140	30	68	60	100
140	160	35	80	70	120

Radial internal clearance – bearings with tapered bore

✎ *The standard is C3*

Self-aligning ball bearings with tapered bore are manufactured as standard with the larger radial internal clearance C3 ➤*380*|▦*4*.

Certain sizes are also available by agreement with internal clearance CN (normal).

The values for radial internal clearance correspond to DIN 620-4:2004 (ISO 5753-1:2009) ➤*380*|▦*4*. They are valid for bearings which are free from load and measurement forces (without elastic deformation).

▦ **4**
Radial internal clearance of self-aligning ball bearings with tapered bore

Nominal bore diameter d mm		Radial internal clearance			
		CN (Group N) µm		C3 (Group 3) µm	
over	incl.	min.	max.	min.	max.
18	24	13	26	20	33
24	30	15	28	23	39
30	40	19	35	29	46
40	50	22	39	33	52
50	65	27	47	41	61
65	80	35	57	50	75
80	100	42	68	62	90
100	120	50	81	75	108
120	140	60	98	90	130
140	160	65	110	100	150

1.11 Dimensions, tolerances

Dimension standards

The main dimensions of self-aligning ball bearings correspond to DIN 630:2011, with the exception of bearing series 112. Nominal dimensions of self-aligning ball bearings ➤*390*|▦.

✎ *Series 112*

The dimensions of self-aligning ball bearings with extended inner ring (bearing series 112) correspond to DIN 630-2, which was withdrawn in 1993. Nominal dimensions of bearings ➤*404*|▦.

Chamfer dimensions

The limiting dimensions for chamfer dimensions correspond to DIN 620-6:2004. Overview and limiting values ➤*137*|*7.11*. Nominal value of chamfer dimension ➤*390*|▦.

Tolerances

The tolerances for the dimensional and running accuracy of self-aligning ball bearings correspond to tolerance class Normal in accordance with ISO 492:2014, except for the bearing bore of bearing series 112, which is manufactured to tolerance class J7. Tolerance values in accordance with ISO 492 ➤*124*|▦*8*.

1.12 Suffixes

Suffixes describe the design and features of a bearing in more detail.

5 Suffixes and corresponding descriptions

Suffix	Description of suffix	
C3	Radial internal clearance C3 (larger than normal)	Standard for bearings with tapered bore
CN	Radial internal clearance CN (normal)	Special design for bearings with tapered bore, available by agreement
K	Tapered bore	Standard
M	Solid brass cage	Standard, cage material dependent on bearing series and bore code
TVH	Solid cage made from glass fibre reinforced polyamide PA66	
2RS	Contact seal on both sides	Dependent on bearing series

1.13 Structure of bearing designation

With ***medias*** interchange, equivalent Schaeffler bearing designations can be determined for bearing designations from other rolling bearing manufacturers *https://www.schaeffler.de/std/1B69*.

Examples of composition of bearing designation

The designation of bearings follows a set model. Examples ➤*381*|*6* and ➤*381*|*7*. The composition of designations is subject to DIN 623-1 ➤*102*|*10*.

6 Self-aligning ball bearing with tapered bore: designation structure

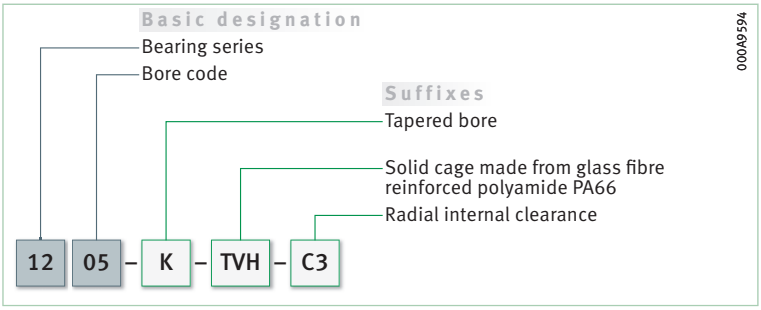

7 Self-aligning ball bearing with tapered bore and adapter sleeve: designation structure

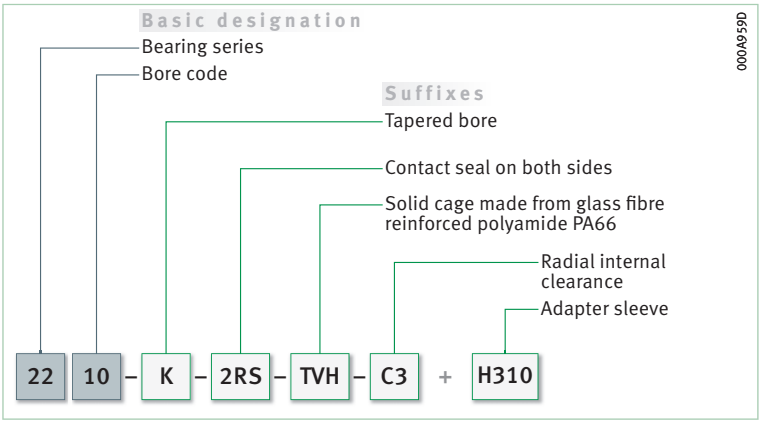

1.14 Dimensioning

Equivalent dynamic bearing load

✎ *P = F_r under purely radial load of constant magnitude and direction*

The basic rating life equation $L = (C_r/P)^p$ used in the dimensioning of bearings under dynamic load assumes a load of constant magnitude and direction. In radial bearings, this is a purely radial load F_r. If this condition is met, the bearing load F_r is used in the rating life equation for P ($P = F_r$).

✎ *P is a substitute force for combined load and various load cases*

If this condition is not met, a constant radial force must first be determined for the rating life calculation that (in relation to the rating life) represents an equivalent load. This force is known as the equivalent dynamic bearing load P.

✎ *$F_a/F_r \leqq e$ or $F_a/F_r > e$*

The calculation of P is dependent on the load ratio F_a/F_r and the calculation factor e ➤*382*| *f1* and ➤*382*| *f2*.

f1 *Equivalent dynamic load*

$$\frac{F_a}{F_r} \leqq e \quad \Rightarrow \quad P = F_r + Y_1 \cdot F_a$$

f2 *Equivalent dynamic load*

$$\frac{F_a}{F_r} > e \quad \Rightarrow \quad P = 0{,}65 \cdot F_r + Y_2 \cdot F_a$$

Legend

P	N	Equivalent dynamic bearing load
F_r	N	Radial load
F_a	N	Axial load
e, Y_1, Y_2	–	Factors ➤*390*| ▦.

Equivalent static bearing load

For self-aligning ball bearings subjected to static load ➤*382*| *f3*.

f3 *Equivalent static load*

$$P_0 = F_{0r} + Y_0 \cdot F_{0a}$$

Legend

P_0	N	Equivalent static bearing load
F_{0r}, F_{0a}	N	Largest radial or axial load present (maximum load)
Y_0	–	Axial load factor ➤*390*| ▦.

Static load safety factor

✎ *$S_0 = C_0/P_0$*

In addition to the basic rating life L (L_{10h}), it is also always necessary to check the static load safety factor S_0 ➤*382*| *f4*.

f4 *Static load safety factor*

$$S_0 = \frac{C_0}{P_0}$$

Legend

S_0	–	Static load safety factor
C_0	N	Basic static load rating
P_0	N	Equivalent static bearing load.

1.15 Minimum load

✎ *In order to prevent damage due to slippage, a minimum radial load of $P > C_{0r}/100$ is required*

In order that no slippage occurs between the contact partners, the self-aligning ball bearings must be constantly subjected to a sufficiently high load. Based on experience, a minimum radial load of the order of $P > C_{0r}/100$ is thus necessary. In most cases, however, the radial load is already higher than the requisite minimum load due to the weight of the supported parts and the external forces.

If the minimum radial load is lower than indicated above, please consult Schaeffler.

1.16 Design of bearing arrangements

Support bearing rings over their entire circumference and width

In order to allow full utilisation of the load carrying capacity of the bearings and achieve the requisite rating life, the bearing rings must be rigidly and uniformly supported by means of contact surfaces over their entire circumference and over the entire width of the raceway. Support can be provided by means of a cylindrical or tapered seating surface ➤384|8 to ➤385|11. The seating and contact surfaces should not be interrupted by grooves, holes or other recesses. The accuracy of mating parts must meet specific requirements ➤385|6 to ➤386|8.

Radial location – fit recommendations for bearings with cylindrical bore

For secure radial location, tight fits are necessary

In addition to supporting the rings adequately, the bearings must also be securely located in a radial direction, to prevent creep of the bearing rings on the mating parts under load. This is generally achieved by means of tight fits between the bearing rings and the mating parts. If the rings are not secured adequately or correctly, this can cause severe damage to the bearings and adjacent machine parts. Influencing factors, such as the conditions of rotation, magnitude of the load, internal clearance, temperature conditions, design of the mating parts and the mounting and dismounting options must be taken into consideration in the selection of fits.

If shock type loads occur, tight fits (transition fit or interference fit) are required to prevent the rings from coming loose at any point. Clearance, transition or interference fits ➤152|6 and ➤160|7.

The following information provided in Technical principles must be taken into consideration in the design of bearing arrangements:

- criteria for selection of fits ➤146
- conditions of rotation ➤147
- tolerance classes for cylindrical shaft seats (radial bearings) ➤149|2
- shaft fits ➤152|6
- tolerance classes for bearing seats in housings (radial bearings) ➤150|4
- housing fits ➤160|7
- shaft tolerances for adapter sleeves and withdrawal sleeves ➤168|8

Axial location – location methods for bearings with cylindrical bore

The bearings must also be securely located in an axial direction

As a tight fit alone is not normally sufficient to also locate the bearing rings securely on the shaft and in the housing bore in an axial direction, this must usually be achieved by means of an additional axial location or retention method. The axial location of the bearing rings must be matched to the type of bearing arrangement. Shaft and housing shoulders, housing covers, nuts, spacer rings, retaining rings, adapter and withdrawal sleeves etc., are fundamentally suitable.

Axial location – bearing series 112

Simple location by means of a grub screw

Bearings of series 112 are axially located by means of a grub screw, which engages in the slot in the bearing inner ring ➤*384*|*8*. The grub screw also prevents the inner ring creeping on the shaft.

If a shaft is to be supported by two bearings, the slots in the inner ring must either be arranged on the sides of the bearings facing towards or away from each other ➤*384*|*8*.

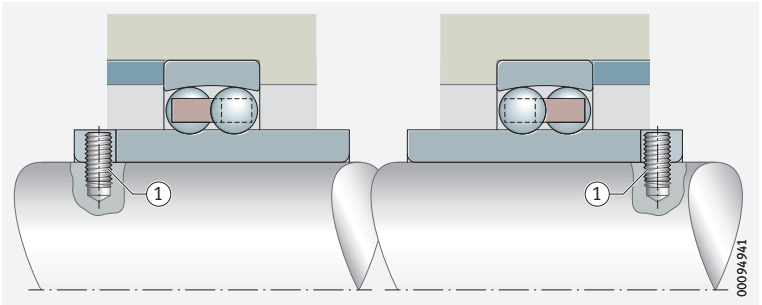

8
Axial location of bearing series 112 using grub screw and arrangement of self-aligning ball bearings, where a shaft is supported by two bearings

① *Grub screw*

Axial location – bearings with tapered bore

Location by means of locknut and tab washer

If a bearing with a tapered bore is mounted directly on a tapered journal, the bearing can be axially located with ease using a locknut and tab washer ➤*384*|*9*.

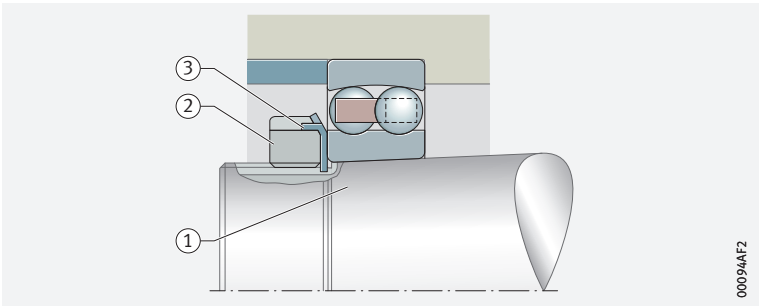

9
Self-aligning ball bearing with tapered bore, mounted directly on the tapered shaft journal

① *Tapered journal with fixing thread*
② *Locknut*
③ *Tab washer*

Location of bearings by means of adapter sleeve

Mounting can be carried out quickly and reliably by means of wrench sets from Schaeffler

Self-aligning ball bearings with a tapered bore can be located easily and with operational liability on smooth or stepped cylindrical shafts by means of an adapter sleeve ➤*384*|*10*. The adapter sleeve does not need to be secured on the shaft by any additional means. The bearings can be positioned at any point on smooth shafts. Axial load carrying capacity of bearing arrangements by means of adapter sleeve connection ➤*376*|*1.2*.

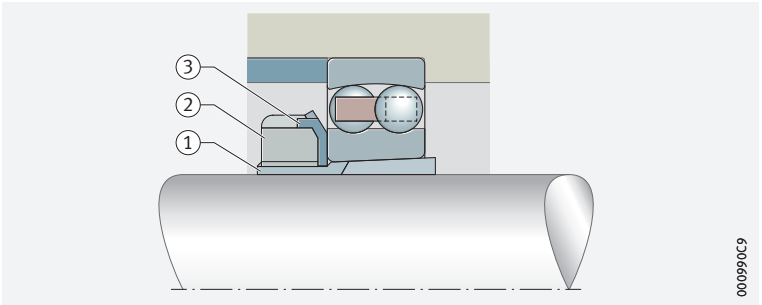

10
Self-aligning ball bearing with adapter sleeve located on smooth shaft

① *Adapter sleeve*
② *Locknut*
③ *Tab washer*

Location by means of adapter sleeve, axial abutment by means of a support ring

If very high axial forces are present, a support ring can also be used to provide axial abutment ➤385|11. In this instance, the mounting dimensions of the support ring B_a and d_b in the product tables must be observed ➤390|.

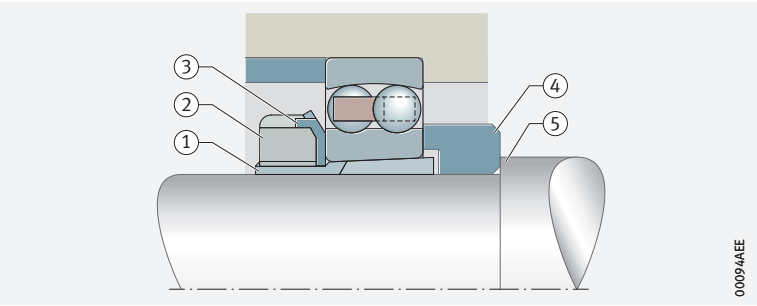

11
Stepped shaft, axial abutment by means of a support ring

1. *Adapter sleeve*
2. *Locknut*
3. *Tab washer*
4. *Support ring*
5. *Shaft shoulder*

Dimensional, geometrical and running accuracy of cylindrical bearing seats

A minimum of IT6 should be provided for the shaft seat and a minimum of IT7 for the housing seat

The accuracy of the cylindrical bearing seat on the shaft and in the housing should correspond to the accuracy of the bearing used. For self-aligning ball bearings with the tolerance class Normal, the shaft seat should correspond to a minimum of standard tolerance grade IT6 and the housing seat to a minimum of IT7. Guide values for the geometrical and positional tolerances of bearing seating surfaces ➤385|6. Tolerances t_1 to t_3 in accordance with ➤170|11. Numerical values for IT grades ➤385|7.

6
Guide values for the geometrical and positional tolerances of bearing seating surfaces

Bearing tolerance class		Bearing seating surface	Standard tolerance grades to ISO 286-1 (IT grades)			
to ISO 492	to DIN 620		Diameter tolerance	Roundness tolerance t_1	Parallelism tolerance t_2	Total axial runout tolerance of abutment shoulder t_3
Normal	PN (P0)	Shaft	IT6 (IT5)	Circumferential load IT4/2	Circumferential load IT4/2	IT4
				Point load IT5/2	Point load IT5/2	
		Housing	IT7 (IT6)	Circumferential load IT5/2	Circumferential load IT5/2	IT5
				Point load IT6/2	Point load IT6/2	

7
Numerical values for ISO standard tolerances (IT grades) to ISO 286-1:2010

IT grade	Nominal dimension in mm						
	over **18**	**30**	**50**	**80**	**120**	**180**	**250**
	incl. **30**	**50**	**80**	**120**	**180**	**250**	**315**
	Values in µm						
IT4	6	7	8	10	12	14	16
IT5	9	11	13	15	18	20	23
IT6	13	16	19	22	25	29	32
IT7	21	25	30	35	40	46	52

Roughness of cylindrical bearing seating surfaces

✎ *Ra must not be too high*

The roughness of the bearing seats must be matched to the tolerance class of the bearings. The mean roughness value Ra must not be too high, in order to maintain the interference loss within limits. The shafts must be ground, while the bores must be precision turned. Guide values as a function of the IT grade of bearing seating surfaces ➤ *386* | ▦ *8*.

▦ *8*
Roughness values for cylindrical bearing seating surfaces – guide values

Nominal diameter of the bearing seat d (D) mm		Recommended mean roughness value for ground bearing seats Ramax µm			
		Diameter tolerance (IT grade)			
over	incl.	IT7	IT6	IT5	IT4
–	80	1,6	0,8	0,4	0,2
80	500	1,6	1,6	0,8	0,4

Tolerances for tapered bearing seats

✎ *Specifications for tapered bearing seats*

For bearings located directly on a tapered shaft journal, the further information in Technical principles must be observed ➤ *173* | ⧉ *12*.

Mounting dimensions for the contact surfaces of bearing rings

✎ *The contact surfaces for the rings must be of sufficient height*

The mounting dimensions of the shaft and housing shoulders, and spacer rings etc., must ensure that the contact surfaces for the bearing rings are of sufficient height. However, they must also reliably prevent rotating parts of the bearing from grazing stationary parts. Proven mounting dimensions for the radii and diameters of the abutment shoulders ➤ *390* | ▦. These dimensions are limiting dimensions (maximum or minimum dimensions); the actual values should not be higher or lower than specified.

Suitable bearing housings for self-aligning ball bearings

✎ *A large range of housings is available*

For economical, operationally reliable and easily interchangeable bearing arrangement units, the self-aligning ball bearings can also be combined with Schaeffler bearing housings ➤ *386* | ⧉ *12*. These easy-to-fit units fulfil all of the requirements for modern machine and plant designs with favourable maintenance-related characteristics.

Due to the large number of application areas, an extensive range of bearing housings is available for bearings with cylindrical and tapered bores. These include split and unsplit plummer block housings, take-up housings, flanged housings and housings for specific industrial and railway applications. Detailed information on bearing housings can be found in publication GK 1 *https://www.schaeffler.de/std/1D54*. This book can be ordered from Schaeffler.

⧉ *12*
Split plummer block housing with a self-aligning ball bearing

① *Split plummer block housing SNV*
② *Self-aligning ball bearing*

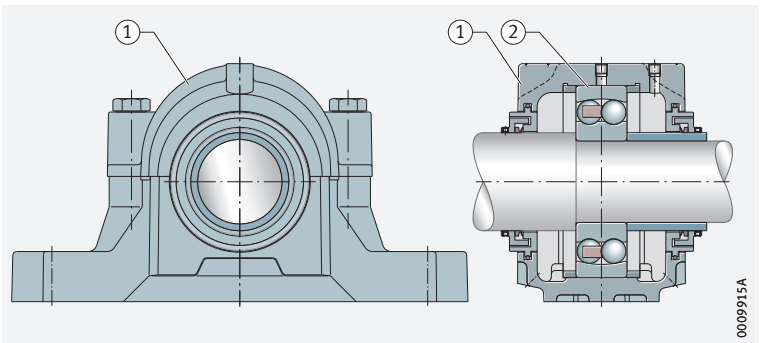

1.17 Mounting and dismounting

The mounting and dismounting options for self-aligning ball bearings, by thermal, hydraulic or mechanical methods, must be taken into consideration in the design of the bearing position.

Ensure that the bearings are not damaged during mounting

Self-aligning ball bearings are not separable. In the mounting of non-separable bearings, the mounting forces must always be applied to the bearing ring with a tight fit.

Mounting of bearings with a tapered bore

Suitable methods

Bearings with a tapered bore are mounted with a tight fit on the shaft or adapter and withdrawal sleeve. The measurement of the reduction in radial internal clearance or of the axial drive-up distance of the inner ring on the tapered bearing seat serves as an indication of the tight fit.

Measuring the reduction in radial internal clearance

The measurement is usually carried out with a feeler gauge

The reduction in radial internal clearance is the difference between the radial internal clearance before mounting and the bearing clearance after mounting of the bearing ➤387|13. The radial internal clearance must be measured first. During pressing on, the radial clearance (bearing clearance) must be checked until the necessary reduction in the radial internal clearance and thus the required tight fit is achieved.

13 *Reduction in radial internal clearance*

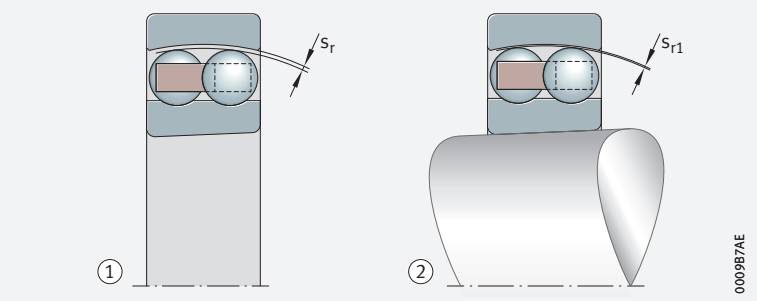

s_r = *radial internal clearance before mounting*

s_{r1} = *radial internal clearance after mounting*

$s_r - s_{r1}$ = *reduction in radial internal clearance*

① *Before mounting*

② *After mounting*

Measuring the axial drive-up distance

The axial drive-up distance can also be measured in place of the reduction in radial internal clearance ➤387|14.

14 *Axial drive-up distance*

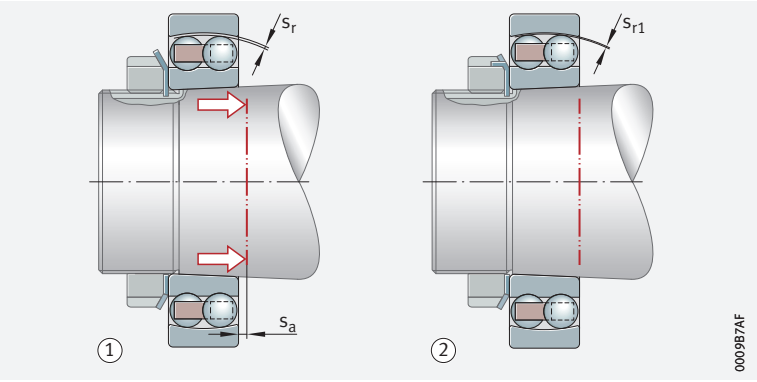

s_a = *axial press-on distance (axial drive-up distance of the bearing)*

s_r = *radial internal clearance*

s_{r1} = *radial internal clearance after pressing on*

$s_r - s_{r1}$ = *reduction in radial internal clearance*

① *Before pressing on*

② *After pressing on*

The malfunction-free operation of bearings presupposes that these have been mounted correctly. An insufficient operating clearance or inadequately tight fit on the shaft generally leads to bearing damage.

If there is any uncertainty regarding the practical application of both methods, Schaeffler must always be consulted.

The mounting of self-aligning ball bearings is also described in the Schaeffler publication BA 28. This BA publication can be requested from Schaeffler.

Schaeffler Mounting Handbook

Rolling bearings must be handled with great care

Rolling bearings are well-proven precision machine elements for the design of economical and reliable bearing arrangements, which offer high operational security. In order that these products can function correctly and achieve the envisaged operating life without detrimental effect, they must be handled with care.

The Schaeffler Mounting Handbook MH 1 gives comprehensive information about the correct storage, mounting, dismounting and maintenance of rotary rolling bearings *https://www.schaeffler.de/std/1D53*. It also provides information which should be observed by the designer, in relation to the mounting, dismounting and maintenance of bearings, in the original design of the bearing position. This book is available from Schaeffler on request.

1.18 Legal notice regarding data freshness

The further development of products may also result in technical changes to catalogue products

Of central interest to Schaeffler is the further development and optimisation of its products and the satisfaction of its customers. In order that you, as the customer, can keep yourself optimally informed about the progress that is being made here and with regard to the current technical status of the products, we publish any product changes which differ from the printed version in our electronic product catalogue.

We therefore reserve the right to make changes to the data and illustrations in this catalogue. This catalogue reflects the status at the time of printing. More recent publications released by us (as printed or digital media) will automatically precede this catalogue if they involve the same subject. Therefore, please always use our electronic product catalogue to check whether more up-to-date information or modification notices exist for your desired product.

Link to electronic product catalogue

The following link will take you to the Schaeffler electronic product catalogue: *https://medias.schaeffler.com*.

1.19 Further information

In addition to the data in this chapter, the following chapters in Technical principles must also be observed in the design of bearing arrangements:

- Determining the bearing size ➤*34*
- Rigidity ➤*54*
- Friction and increases in temperature ➤*56*
- Speeds ➤*64*
- Bearing data ➤*97*
- Lubrication ➤*70*
- Sealing ➤*185*
- Design of bearing arrangements ➤*141*
- Mounting and dismounting ➤*194*



Self-aligning ball bearings

With cylindrical or tapered bore

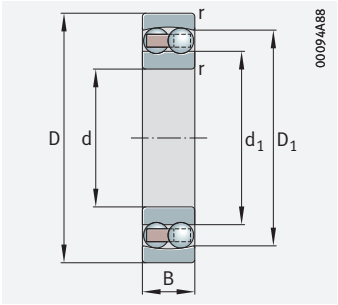

Cylindrical bore

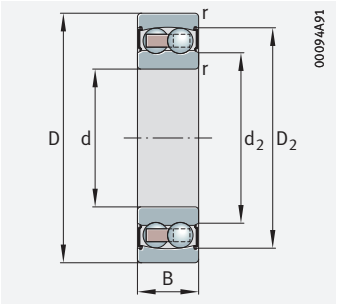

Cylindrical bore with seal 2RS

d = 5 – 20 mm

Main dimensions			Basic load ratings		Fatigue limit load	Limiting speed	Speed rating	Mass	Designation
d	D	B	dyn. C_r	stat. C_{0r}	C_{ur}	n_G	$n_{\vartheta r}$	m	➤*381|1.12* ➤*381|1.13*
			N	N	N	min^{-1}	min^{-1}	≈ kg	
5	19	6	2 600	480	30,5	41 500	24 500	0,01	**135-TVH**
6	19	6	2 600	480	30,5	41 500	30 500	0,009	**126-TVH**
7	22	7	2 750	560	35,5	39 000	26 500	0,014	**127-TVH**
8	22	7	2 750	560	35,5	39 000	27 000	0,014	**108-TVH**
9	26	8	3 950	810	51	33 500	24 100	0,022	**129-TVH**
10	30	9	5 700	1 190	76	29 500	22 100	0,034	**1200-TVH**
	30	14	5 700	1 190	76	16 500	–	0,053	**2200-2RS-TVH**
	30	14	8 800	1 740	111	25 500	26 000	0,045	**2200-TVH**
12	32	10	5 700	1 270	80	28 000	21 300	0,041	**1201-TVH**
	32	14	5 700	1 270	80	14 700	–	0,058	**2201-2RS-TVH**
	32	14	9 400	1 940	123	24 200	23 300	0,05	**2201-TVH**
	37	12	9 800	2 160	137	22 300	16 200	0,067	**1301-TVH**
15	35	11	7 700	1 750	111	23 800	19 100	0,048	**1202-TVH**
	35	14	7 700	1 750	111	13 300	–	0,061	**2202-2RS-TVH**
	35	14	9 600	2 100	133	22 200	19 600	0,057	**2202-TVH**
	42	17	9 800	2 280	145	11 200	–	0,114	**2302-2RS-TVH**
	42	17	17 400	3 850	244	17 200	15 600	0,111	**2302-TVH**
17	40	12	8 100	2 010	128	21 800	17 400	0,073	**1203-TVH**
	40	16	8 100	2 010	128	11 300	–	0,098	**2203-2RS-TVH**
	40	16	11 800	2 750	176	19 100	17 400	0,088	**2203-TVH**
	47	14	12 900	3 200	202	17 800	13 300	0,065	**1303-TVH**
	47	19	12 900	3 200	202	10 100	–	0,175	**2303-2RS-TVH**
	47	19	13 900	3 200	203	17 000	14 900	0,155	**2303-TVH**
20	47	14	10 100	2 600	166	18 100	15 300	0,116	**1204-K-TVH-C3**
	47	14	10 100	2 600	166	18 100	15 300	0,118	**1204-TVH**
	47	18	10 100	2 600	166	9 400	–	0,151	**2204-2RS-TVH**
	47	18	14 700	3 550	225	16 300	15 600	0,134	**2204-TVH**
	52	15	12 700	3 350	212	16 100	11 600	0,163	**1304-TVH**
	52	21	12 700	3 350	212	8 500	–	0,23	**2304-2RS-TVH**
	52	21	17 600	4 300	270	15 000	13 800	0,206	**2304-TVH**

medias *https://www.schaeffler.de/std/1F9A*

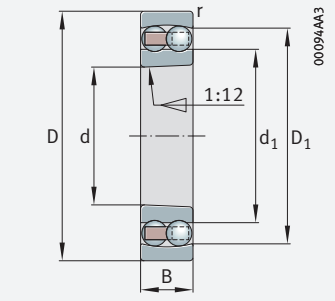

Tapered bore

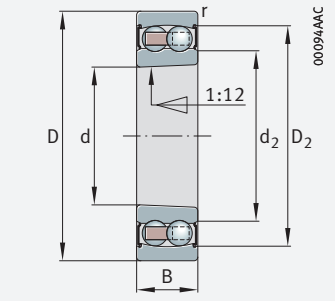

Tapered bore with seal 2RS

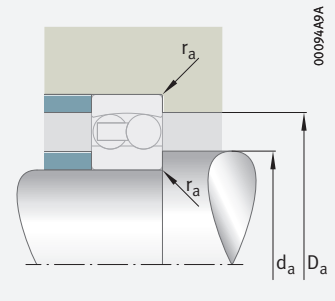

Mounting dimensions

Dimensions						Mounting dimensions			Calculation factors			
d	r	D_1	D_2	d_1	d_2	d_a	D_a	r_a	e	Y_1	Y_2	Y_0
	min.	≈	≈	≈	≈	min.	max.	max.				
5	0,3	14,5	–	10,1	–	7,4	16,6	0,3	0,35	1,82	2,82	1,91
6	0,3	14,7	–	10,1	–	8,4	16,6	0,3	0,35	1,82	2,82	1,91
7	0,3	17,1	–	12,4	–	9,4	19,6	0,3	0,33	1,92	2,97	2,01
8	0,3	16,8	–	12,4	–	10,6	19,4	0,3	0,33	1,92	2,97	2,01
9	0,6	20	–	14,5	–	13,2	21,8	0,6	0,32	1,95	3,01	2,04
10	0,6	23,3	–	16,3	–	14,2	25,8	0,6	0,32	1,95	3,02	2,05
	0,6	–	25,2	–	14,1	14,2	25,8	0,6	0,32	1,95	3,02	2,05
	0,6	24	–	15,1	–	14,2	25,8	0,6	0,58	1,09	1,69	1,14
12	0,6	25,1	–	18,2	–	16,2	27,8	0,6	0,37	1,69	2,62	1,77
	0,6	–	27,2	–	16,2	16,2	27,8	0,6	0,37	1,69	2,62	1,77
	0,6	25,9	–	17,1	–	16,2	27,8	0,6	0,53	1,2	1,85	1,25
	1	29,7	–	20,3	–	17,6	31,4	1	0,35	1,8	2,79	1,89
15	0,6	28,8	–	20,2	–	19,2	30,8	0,6	0,34	1,86	2,88	1,95
	0,6	–	30,2	–	19	19,2	30,8	0,6	0,34	1,86	2,88	1,95
	0,6	29,2	–	20,3	–	19,2	30,8	0,6	0,46	1,37	2,13	1,44
	1	–	34,9	–	23,9	20,6	36,4	1	0,35	1,79	2,77	1,88
	1	34,4	–	22,5	–	20,6	36,4	1	0,51	1,23	1,91	1,29
17	0,6	32	–	23,7	–	21,2	35,8	0,6	0,33	1,93	2,99	2,03
	0,6	–	34,3	–	21,6	21,2	35,8	0,6	0,33	1,93	2,99	2,03
	0,6	33,9	–	23,9	–	21,2	35,8	0,6	0,46	1,37	2,12	1,43
	1	37	–	26,7	–	22,6	41,4	1	0,32	1,94	3	2,03
	1	–	39,4	–	23,9	22,6	41,4	1	0,32	1,94	3	2,03
	1	37,3	–	26,2	–	22,6	41,4	1	0,53	1,19	1,85	1,25
20	1	37,8	–	29,2	–	25,6	41,4	1	0,28	2,24	3,46	2,34
	1	37,8	–	29,2	–	25,6	41,4	1	0,28	2,24	3,46	2,34
	1	–	41	–	25,8	25,6	41,4	1	0,28	2,24	3,46	2,34
	1	39,1	–	28	–	25,6	41,4	1	0,44	1,45	2,24	1,51
	1,1	41,5	–	31,6	–	27	45	1	0,29	2,17	3,35	2,27
	1,1	–	44,4	–	27,2	27	45	1	0,29	2,17	3,35	2,27
	1,1	41,2	–	29,1	–	27	45	1	0,51	1,23	1,9	1,29

Self-aligning ball bearings

With cylindrical or tapered bore

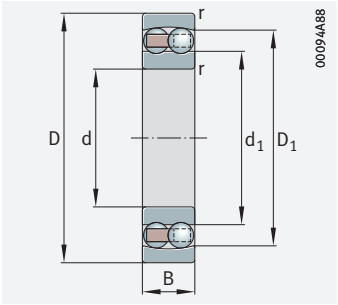

Cylindrical bore

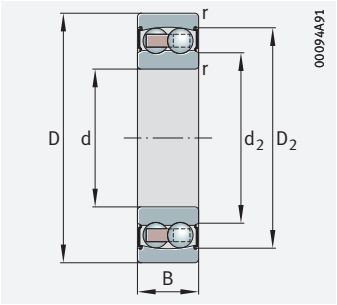

Cylindrical bore with seal 2RS

d = 25 – 35 mm

Main dimensions			Basic load ratings		Fatigue limit load	Limiting speed	Speed rating	Mass	Designation
d	D	B	dyn. C_r	stat. C_{0r}	C_{ur}	n_G	$n_{\vartheta r}$	m	➤*381*|*1.12* ➤*381*|*1.13*
			N	N	N	min^{-1}	min^{-1}	≈ kg	
25	52	15	12 300	3 300	209	15 500	13 400	0,135	**1205-K-TVH-C3**
	52	15	12 300	3 300	209	15 500	13 400	0,138	**1205-TVH**
	52	18	12 300	3 300	209	8 100	–	0,161	**2205-2RS-TVH**
	52	18	12 300	3 300	209	8 100	–	0,157	**2205-K-2RS-TVH-C3**
	52	18	17 300	4 450	285	14 400	13 400	0,152	**2205-K-TVH-C3**
	52	18	17 300	4 450	285	14 400	13 400	0,156	**2205-TVH**
	62	17	18 300	5 000	320	12 900	10 000	0,254	**1305-K-TVH-C3**
	62	17	18 300	5 000	320	12 900	10 000	0,258	**1305-TVH**
	62	24	18 300	5 000	320	7 000	–	0,367	**2305-2RS-TVH**
	62	24	25 000	6 600	420	12 200	11 900	0,328	**2305-K-TVH-C3**
	62	24	25 000	6 600	420	12 200	11 900	0,335	**2305-TVH**
30	62	16	15 900	4 650	295	13 100	11 400	0,217	**1206-K-TVH-C3**
	62	16	15 900	4 650	295	13 100	11 400	0,221	**1206-TVH**
	62	20	15 900	4 650	295	6 800	–	0,274	**2206-2RS-TVH**
	62	20	15 900	4 650	295	6 800	–	0,268	**2206-K-2RS-TVH-C3**
	62	20	26 000	6 900	440	11 500	11 400	0,246	**2206-K-TVH-C3**
	62	20	26 000	6 900	440	11 500	11 400	0,252	**2206-TVH**
	72	19	21 700	6 300	400	11 100	8 700	0,379	**1306-K-TVH-C3**
	72	19	21 700	6 300	400	11 100	8 700	0,384	**1306-TVH**
	72	27	21 700	6 300	400	5 900	–	0,554	**2306-2RS-TVH**
	72	27	32 500	8 800	560	10 200	10 400	0,476	**2306-K-TVH-C3**
	72	27	32 500	8 800	560	10 200	10 400	0,488	**2306-TVH**
35	72	17	16 000	5 100	325	11 600	9 800	0,319	**1207-K-TVH-C3**
	72	17	16 000	5 100	325	11 600	9 800	0,324	**1207-TVH**
	72	23	16 000	5 100	325	5 600	–	0,442	**2207-2RS-TVH**
	72	23	16 000	5 100	325	5 600	–	0,432	**2207-K-2RS-TVH-C3**
	72	23	33 000	9 000	570	9 800	10 300	0,38	**2207-K-TVH-C3**
	72	23	33 000	9 000	570	9 800	10 300	0,389	**2207-TVH**
	80	21	25 500	7 900	500	9 700	7 800	0,5	**1307-K-TVH-C3**
	80	21	25 500	7 900	500	9 700	7 800	0,507	**1307-TVH**
	80	31	25 500	7 900	500	5 200	–	0,744	**2307-2RS-TVH**
	80	31	40 500	11 200	710	8 900	9 800	0,657	**2307-K-TVH-C3**
	80	31	40 500	11 200	710	8 900	9 800	0,675	**2307-TVH**

medias *https://www.schaeffler.de/std/1F9A*

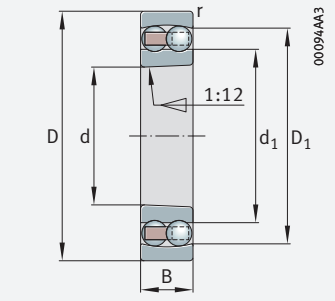

Tapered bore

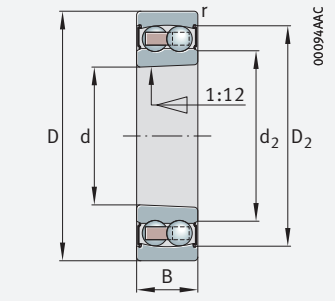

Tapered bore with seal 2RS

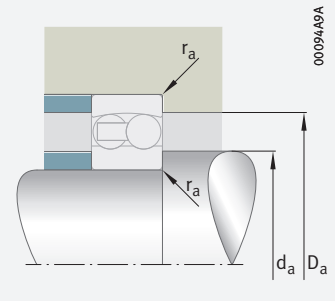

Mounting dimensions

Dimensions						Mounting dimensions			Calculation factors			
d	r	D_1	D_2	d_1	d_2	d_a	D_a	r_a	e	Y_1	Y_2	Y_0
	min.	≈	≈	≈	≈	min.	max.	max.				
25	1	43,6	–	33,3	–	30,6	46,4	1	0,27	2,37	3,66	2,48
	1	43,6	–	33,3	–	30,6	46,4	1	0,27	2,37	3,66	2,48
	1	–	45,3	–	30,7	30,6	46,4	1	0,27	2,37	3,66	2,48
	1	–	45,3	–	30,7	30,6	46,4	1	0,27	2,37	3,66	2,48
	1	44,4	–	32,3	–	30,6	46,4	1	0,35	1,78	2,75	1,86
	1	44,4	–	32,3	–	30,6	46,4	1	0,35	1,78	2,75	1,86
	1,1	50,4	–	38,1	–	32	55	1	0,28	2,29	3,54	2,4
	1,1	50,4	–	38,1	–	32	55	1	0,28	2,29	3,54	2,4
	1,1	–	52,4	–	33,5	32	55	1	0,28	2,29	3,54	2,4
	1,1	49,9	–	35,5	–	32	55	1	0,48	1,32	2,04	1,38
	1,1	49,9	–	35,5	–	32	55	1	0,48	1,32	2,04	1,38
30	1	51,6	–	40,1	–	35,6	56,4	1	0,25	2,53	3,91	2,65
	1	51,6	–	40,1	–	35,6	56,4	1	0,25	2,53	3,91	2,65
	1	–	53,3	–	37,3	35,6	56,4	1	0,25	2,53	3,91	2,65
	1	–	53,3	–	37,3	35,6	56,4	1	0,25	2,53	3,91	2,65
	1	53,7	–	38,5	–	35,6	56,4	1	0,3	2,13	3,29	2,23
	1	53,7	–	38,5	–	35,6	56,4	1	0,3	2,13	3,29	2,23
	1,1	58,9	–	45,1	–	37	65	1	0,26	2,39	3,71	2,51
	1,1	58,9	–	45	–	37	65	1	0,26	2,39	3,71	2,51
	1,1	–	62,3	–	40,6	37	65	1	0,26	2,39	3,71	2,51
	1,1	58,8	–	41,5	–	37	65	1	0,45	1,4	2,17	1,47
	1,1	58,8	–	41,5	–	37	65	1	0,45	1,4	2,17	1,47
35	1,1	59,1	–	47,7	–	42	65	1	0,22	2,8	4,34	2,94
	1,1	59,1	–	47,7	–	42	65	1	0,22	2,8	4,34	2,94
	1,1	–	63,4	–	43,5	42	65	1	0,22	2,8	4,34	2,94
	1,1	–	63,4	–	43,5	42	65	1	0,22	2,8	4,34	2,94
	1,1	62,4	–	45,7	–	42	65	1	0,3	2,13	3,29	2,23
	1,1	62,4	–	45,7	–	42	65	1	0,3	2,13	3,29	2,23
	1,5	70,1	–	51,3	–	44	71	1,5	0,26	2,47	3,82	2,59
	1,5	70,1	–	51,3	–	44	71	1,5	0,26	2,47	3,82	2,59
	1,5	–	68,4	–	44,9	44	71	1,5	0,26	2,47	3,82	2,59
	1,5	66,1	–	46,9	–	44	71	1,5	0,47	1,35	2,1	1,42
	1,5	66,1	–	46,9	–	44	71	1,5	0,47	1,35	2,1	1,42

Self-aligning ball bearings

With cylindrical or tapered bore

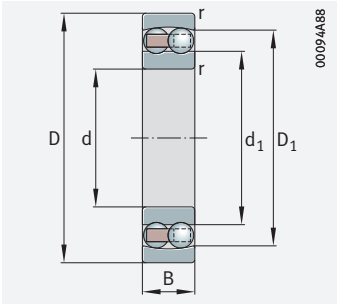

Cylindrical bore

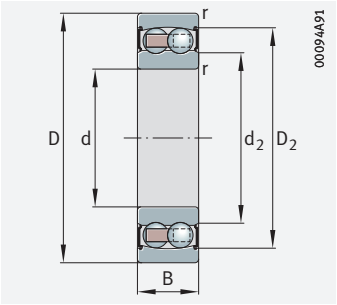

Cylindrical bore with seal 2RS

d = 40 – 50 mm

Main dimensions			Basic load ratings		Fatigue limit load	Limiting speed	Speed rating	Mass	Designation
d	D	B	dyn. C_r	stat. C_{0r}	C_{ur}	n_G	$n_{\vartheta r}$	m	➤*381|1.12* ➤*381|1.13*
			N	N	N	min^{-1}	min^{-1}	≈ kg	
40	80	18	19 400	6 500	415	10 100	8 600	0,408	**1208-K-TVH-C3**
	80	18	19 400	6 500	415	10 100	8 600	0,414	**1208-TVH**
	80	23	19 400	6 500	415	4 950	–	0,528	**2208-2RS-TVH**
	80	23	19 400	6 500	415	4 950	–	0,517	**2208-K-2RS-TVH-C3**
	80	23	32 500	9 500	600	8 900	8 700	0,465	**2208-K-TVH-C3**
	80	23	32 500	9 500	600	8 900	8 700	0,476	**2208-TVH**
	90	23	30 000	9 700	610	8 600	7 200	0,698	**1308-K-TVH-C3**
	90	23	30 000	9 700	610	8 600	7 200	0,708	**1308-TVH**
	90	33	30 000	9 700	610	4 650	–	1,01	**2308-2RS-TVH**
	90	33	46 000	13 500	860	7 900	8 700	0,899	**2308-K-TVH-C3**
	90	33	46 000	13 500	860	7 900	8 700	0,922	**2308-TVH**
45	85	19	22 000	7 300	465	9 300	8 200	0,454	**1209-K-TVH-C3**
	85	19	22 000	7 300	465	9 300	8 200	0,462	**1209-TVH**
	85	23	22 000	7 300	465	4 650	–	0,548	**2209-2RS-TVH**
	85	23	22 000	7 300	465	4 650	–	0,535	**2209-K-2RS-TVH-C3**
	85	23	28 500	9 000	570	8 600	7 800	0,505	**2209-K-TVH-C3**
	85	23	28 500	9 000	570	8 600	7 800	0,517	**2209-TVH**
	100	25	38 500	12 700	810	7 500	6 700	0,939	**1309-K-TVH-C3**
	100	25	38 500	12 700	810	7 500	6 700	0,953	**1309-TVH**
	100	36	38 500	12 700	810	4 200	–	1,34	**2309-2RS-TVH**
	100	36	55 000	16 600	1 060	7 000	8 000	1,19	**2309-K-TVH-C3**
	100	36	55 000	16 600	1 060	7 000	8 000	1,22	**2309-TVH**
50	90	20	22 900	8 100	520	8 700	7 700	0,516	**1210-K-TVH-C3**
	90	20	22 900	8 100	520	8 700	7 700	0,526	**1210-TVH**
	90	23	22 900	8 100	520	4 250	–	0,606	**2210-2RS-TVH**
	90	23	22 900	8 100	520	4 250	–	0,593	**2210-K-2RS-TVH-C3**
	90	23	28 500	9 500	600	8 100	7 100	0,543	**2210-K-TVH-C3**
	90	23	28 500	9 500	600	8 100	7 100	0,556	**2210-TVH**
	110	27	42 000	14 200	900	6 900	6 300	1,19	**1310-K-TVH-C3**
	110	27	42 000	14 200	900	6 900	6 300	1,21	**1310-TVH**
	110	40	42 000	14 200	900	3 750	–	1,82	**2310-2RS-TVH**
	110	40	66 000	20 200	1 280	6 300	7 600	1,64	**2310-TVH**

medias *https://www.schaeffler.de/std/1F9A*

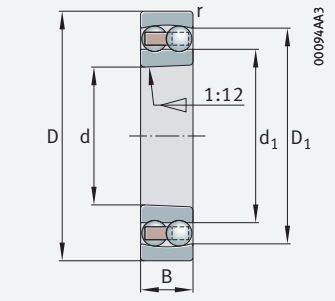

Tapered bore

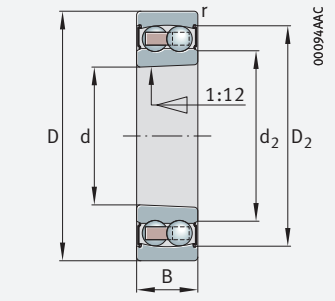

Tapered bore with seal 2RS

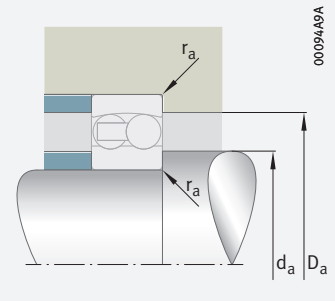

Mounting dimensions

Dimensions						Mounting dimensions			Calculation factors			
d	r min.	D_1 ≈	D_2 ≈	d_1 ≈	d_2 ≈	d_a min.	D_a max.	r_a max.	e	Y_1	Y_2	Y_0
40	1,1	67,3	–	54	–	47	73	1	0,22	2,9	4,49	3,04
	1,1	67,3	–	54	–	47	73	1	0,22	2,9	4,49	3,04
	1,1	–	70,3	–	49,2	47	73	1	0,22	2,9	4,49	3,04
	1,1	–	70,3	–	49,2	47	73	1	0,22	2,9	4,49	3,04
	1,1	70,2	–	52,5	–	47	73	1	0,26	2,43	3,76	2,54
	1,1	70,2	–	52,5	–	47	73	1	0,26	2,43	3,76	2,54
	1,5	74,7	–	57,8	–	49	81	1,5	0,25	2,52	3,9	2,64
	1,5	74,7	–	57,8	–	49	81	1,5	0,25	2,52	3,9	2,64
	1,5	–	77,3	–	51	49	81	1,5	0,25	2,52	3,9	2,64
	1,5	74,5	–	53,7	–	49	81	1,5	0,43	1,45	2,25	1,52
	1,5	74,5	–	53,7	–	49	81	1,5	0,43	1,45	2,25	1,52
45	1,1	72,1	–	57,7	–	52	78	1	0,21	3,04	4,7	3,18
	1,1	72,1	–	57,7	–	52	78	1	0,21	3,04	4,7	3,18
	1,1	–	76	–	53,8	52	78	1	0,21	3,04	4,7	3,18
	1,1	–	76	–	53,8	52	78	1	0,21	3,04	4,7	3,18
	1,1	75,4	–	59	–	52	78	1	0,26	2,43	3,76	2,54
	1,1	75,4	–	59	–	52	78	1	0,26	2,43	3,76	2,54
	1,5	83,5	–	64,1	–	54	91	1,5	0,25	2,5	3,87	2,62
	1,5	83,5	–	64,1	–	54	91	1,5	0,25	2,5	3,87	2,62
	1,5	–	85,8	–	57,5	54	91	1,5	0,25	2,5	3,87	2,62
	1,5	83,6	–	60,1	–	54	91	1,5	0,43	1,48	2,29	1,55
	1,5	83,6	–	60,1	–	54	91	1,5	0,43	1,48	2,29	1,55
50	1,1	77,1	–	62,7	–	57	83	1	0,2	3,17	4,9	3,32
	1,1	77,1	–	62,7	–	57	83	1	0,2	3,17	4,9	3,32
	1,1	–	79	–	60,5	57	83	1	0,2	3,17	4,9	3,32
	1,1	–	79	–	60,5	57	83	1	0,2	3,17	4,9	3,32
	1,1	80,5	–	64	–	57	83	1	0,24	2,61	4,05	2,74
	1,1	80,5	–	64	–	57	83	1	0,24	2,61	4,05	2,74
	2	91,7	–	71,2	–	61	99	2	0,24	2,6	4,03	2,73
	2	91,7	–	71,2	–	61	99	2	0,24	2,6	4,03	2,73
	2	–	95,1	–	65,9	61	99	2	0,24	2,6	4,03	2,73
	2	91,4	–	65,9	–	61	99	2	0,43	1,47	2,27	1,54

Self-aligning ball bearings

With cylindrical or tapered bore

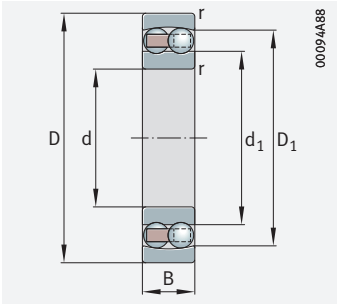

Cylindrical bore

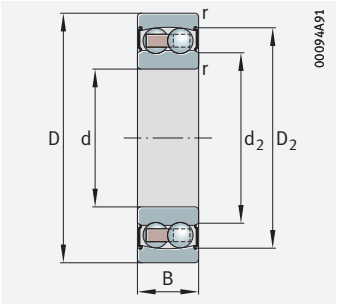

Cylindrical bore with seal 2RS

d = 55 – 65 mm

Main dimensions			Basic load ratings		Fatigue limit load	Limiting speed	Speed rating	Mass	Designation
d	D	B	dyn. C_r	stat. C_{0r}	C_{ur}	n_G	$n_{\vartheta r}$	m	➤*381|1.12* ➤*381|1.13*
			N	N	N	min^{-1}	min^{-1}	≈ kg	
55	100	21	27 000	10 000	630	7 700	6 900	0,682	**1211-K-TVH-C3**
	100	21	27 000	10 000	630	7 700	6 900	0,693	**1211-TVH**
	100	25	27 000	10 000	630	3 850	–	0,825	**2211-2RS-TVH**
	100	25	27 000	10 000	630	3 850	–	0,808	**2211-K-2RS-TVH-C3**
	100	25	39 000	12 500	790	7 000	6 700	0,73	**2211-K-TVH-C3**
	100	25	39 000	12 500	790	7 000	6 700	0,746	**2211-TVH**
	120	29	52 000	17 900	1 130	6 100	5 800	1,55	**1311-K-TVH-C3**
	120	29	52 000	17 900	1 130	6 100	5 800	1,57	**1311-TVH**
	120	43	52 000	17 900	1 130	3 450	–	2,28	**2311-2RS-TVH**
	120	43	77 000	24 000	1 520	5 700	7 100	2,02	**2311-K-TVH-C3**
	120	43	77 000	24 000	1 520	5 700	7 100	2,07	**2311-TVH**
60	110	22	30 500	11 500	730	6 900	6 300	0,88	**1212-K-TVH-C3**
	110	22	30 500	11 500	730	6 900	6 300	0,894	**1212-TVH**
	110	28	30 500	11 500	730	3 450	–	1,13	**2212-2RS-TVH**
	110	28	30 500	11 500	730	3 450	–	1,13	**2212-K-2RS-TVH-C3**
	110	28	48 000	16 500	1 040	6 300	6 400	1,03	**2212-K-TVH-C3**
	110	28	48 000	16 500	1 040	6 300	6 400	1,06	**2212-TVH**
	130	31	58 000	20 800	1 320	5 500	5 200	1,94	**1312-K-TVH-C3**
	130	31	58 000	20 800	1 320	5 500	5 200	1,97	**1312-TVH**
	130	46	89 000	28 000	1 790	5 200	6 700	2,52	**2312-K-TVH-C3**
	130	46	89 000	28 000	1 790	5 200	6 700	2,58	**2312-TVH**
65	120	23	31 000	12 500	790	6 500	5 800	1,13	**1213-K-TVH-C3**
	120	23	31 000	12 500	790	6 500	5 800	1,14	**1213-TVH**
	120	31	31 000	12 500	790	3 150	–	1,53	**2213-2RS-TVH**
	120	31	31 000	12 500	790	3 150	–	1,5	**2213-K-2RS-TVH-C3**
	120	31	58 000	19 200	1 220	5 600	6 200	1,33	**2213-K-TVH-C3**
	120	31	58 000	19 200	1 220	5 600	6 200	1,36	**2213-TVH**
	140	33	63 000	22 900	1 420	5 200	5 100	2,41	**1313-K-TVH-C3**
	140	33	63 000	22 900	1 420	5 200	5 100	2,44	**1313-TVH**
	140	48	98 000	32 500	2 040	4 750	6 100	3,16	**2313-K-TVH-C3**
	140	48	98 000	32 500	2 040	4 750	6 100	3,23	**2313-TVH**

medias *https://www.schaeffler.de/std/1F9A*

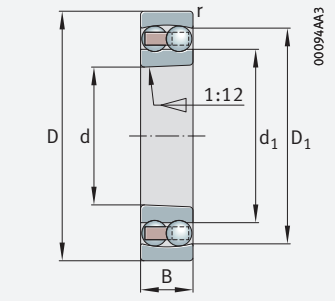

Tapered bore

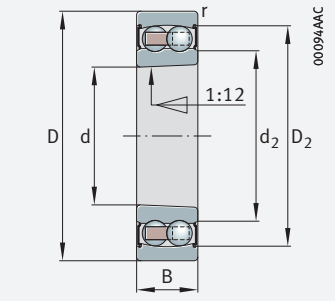

Tapered bore with seal 2RS

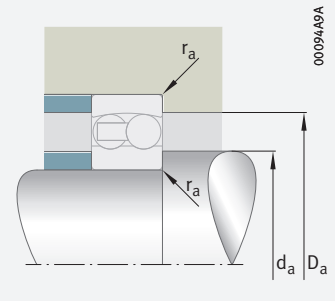

Mounting dimensions

Dimensions						Mounting dimensions			Calculation factors			
d	r	D_1	D_2	d_1	d_2	d_a	D_a	r_a	e	Y_1	Y_2	Y_0
	min.	≈	≈	≈	≈	min.	max.	max.				
55	1,5	86,4	–	69,5	–	64	91	1,5	0,19	3,31	5,12	3,47
	1,5	86,4	–	69,5	–	64	91	1,5	0,19	3,31	5,12	3,47
	1,5	–	88,2	–	68	64	91	1,5	0,19	3,31	5,12	3,47
	1,5	–	88,2	–	68	64	91	1,5	0,19	3,31	5,12	3,47
	1,5	89,8	–	69,6	–	64	91	1,5	0,22	2,92	4,52	3,06
	1,5	89,8	–	69,6	–	64	91	1,5	0,22	2,92	4,52	3,06
	2	101	–	78	–	66	109	2	0,24	2,66	4,12	2,79
	2	101	–	78	–	66	109	2	0,24	2,66	4,12	2,79
	2	–	106,4	–	70,5	66	109	2	0,24	2,66	4,12	2,79
	2	100,2	–	71,7	–	66	109	2	0,42	1,51	2,33	1,58
	2	100,2	–	71,7	–	66	109	2	0,42	1,51	2,33	1,58
60	1,5	95,2	–	78	–	69	101	1,5	0,18	3,47	5,37	3,64
	1,5	95,2	–	78	–	69	101	1,5	0,18	3,47	5,37	3,64
	1,5	–	99,5	–	70,4	69	101	1,5	0,18	3,47	5,37	3,64
	1,5	–	99,5	–	70,4	69	101	1,5	0,18	3,47	5,37	3,64
	1,5	98,2	–	76,6	–	69	101	1,5	0,23	2,69	4,16	2,82
	1,5	98,2	–	76,6	–	69	101	1,5	0,23	2,69	4,16	2,82
	2,1	112,2	–	87	–	72	118	2,1	0,23	2,77	4,28	2,9
	2,1	112,2	–	87	–	72	118	2,1	0,23	2,77	4,28	2,9
	2,1	108,5	–	77	–	72	118	2,1	0,41	1,55	2,4	1,62
	2,1	108,5	–	77	–	72	118	2,1	0,41	1,55	2,4	1,62
65	1,5	102,7	–	85,2	–	74	111	1,5	0,18	3,57	5,52	3,74
	1,5	102,7	–	85,2	–	74	111	1,5	0,18	3,57	5,52	3,74
	1,5	–	107,8	–	78	74	111	1,5	0,18	3,57	5,52	3,74
	1,5	–	107,8	–	78	74	111	1,5	0,18	3,57	5,52	3,74
	1,5	106,9	–	82,4	–	74	111	1,5	0,23	2,78	4,31	2,92
	1,5	106,9	–	82,4	–	74	111	1,5	0,23	2,78	4,31	2,92
	2,1	118,2	–	92,7	–	77	128	2,1	0,23	2,75	4,26	2,88
	2,1	118,2	–	92,7	–	77	128	2,1	0,23	2,75	4,26	2,88
	2,1	118,3	–	85,6	–	77	128	2,1	0,39	1,62	2,51	1,7
	2,1	118,3	–	85,6	–	77	128	2,1	0,39	1,62	2,51	1,7

Self-aligning ball bearings

With cylindrical or tapered bore

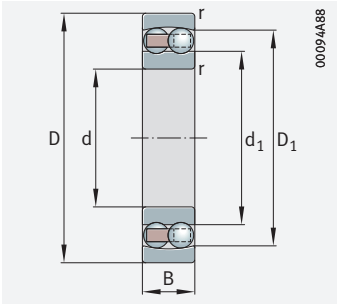

Cylindrical bore

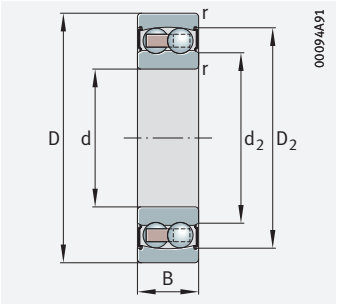

Cylindrical bore with seal 2RS

d = 70 – 85 mm

Main dimensions			Basic load ratings		Fatigue limit load	Limiting speed	Speed rating	Mass	Designation
d	D	B	dyn. C_r	stat. C_{0r}	C_{ur}	n_G	$n_{\vartheta r}$	m	➤*381|1.12* ➤*381|1.13*
			N	N	N	min^{-1}	min^{-1}	≈ kg	
70	125	24	35 000	13 800	880	6 200	5 900	1,23	**1214-K-TVH-C3**
	125	24	35 000	13 800	880	6 200	5 900	1,25	**1214-TVH**
	125	31	35 000	13 800	880	3 050	–	1,59	**2214-2RS-TVH**
	125	31	44 000	17 100	1 080	8 800	5 900	1,69	**2214-M**
	150	35	75 000	27 500	1 670	7 200	4 950	3,11	**1314-M**
	150	51	112 000	37 500	2 270	6 600	5 800	4,38	**2314-M**
75	130	25	39 000	15 700	980	5 700	5 500	1,32	**1215-K-TVH-C3**
	130	25	39 000	15 700	980	5 700	5 500	1,34	**1215-TVH**
	130	31	44 500	17 800	1 110	5 600	5 600	1,6	**2215-K-TVH-C3**
	130	31	44 500	17 800	1 110	5 600	5 600	1,6	**2215-TVH**
	160	37	80 000	30 000	1 740	6 700	4 750	3,52	**1315-K-M-C3**
	160	37	80 000	30 000	1 740	6 700	4 750	3,56	**1315-M**
	160	55	125 000	42 500	2 490	6 100	5 600	5,21	**2315-K-M-C3**
	160	55	125 000	42 500	2 490	6 100	5 600	5,33	**2315-M**
80	140	26	40 000	17 000	1 020	5 300	5 100	1,62	**1216-K-TVH-C3**
	140	26	40 000	17 000	1 020	5 300	5 100	1,65	**1216-TVH**
	140	33	49 500	19 900	1 210	5 300	5 400	1,97	**2216-K-TVH-C3**
	140	33	49 500	19 900	1 210	5 300	5 400	2,01	**2216-TVH**
	170	39	89 000	33 000	1 870	6 200	4 500	4,5	**1316-K-M-C3**
	170	39	89 000	33 000	1 870	6 200	4 500	4,56	**1316-M**
	170	58	139 000	48 500	2 750	5 700	5 400	6,05	**2316-K-M-C3**
	170	58	139 000	48 500	2 750	5 700	5 400	6,2	**2316-M**
85	150	28	49 500	20 800	1 210	4 900	4 950	2,03	**1217-K-TVH-C3**
	150	28	49 500	20 800	1 210	4 900	4 950	2,07	**1217-TVH**
	150	36	59 000	23 600	1 380	7 200	5 200	2,73	**2217-K-M-C3**
	150	36	59 000	23 600	1 380	7 200	5 200	2,79	**2217-M**
	180	41	99 000	38 000	2 070	5 800	4 300	5,32	**1317-K-M-C3**
	180	41	99 000	38 000	2 070	5 800	4 300	5,39	**1317-M**
	180	60	143 000	51 000	2 850	5 400	5 200	7,04	**2317-K-M-C3**
	180	60	143 000	51 000	2 850	5 400	5 200	7,2	**2317-M**

medias *https://www.schaeffler.de/std/1F9A*

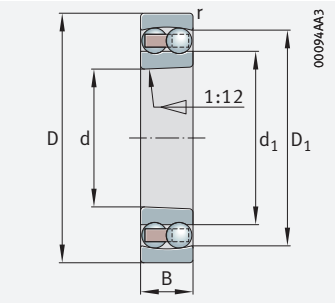

Tapered bore

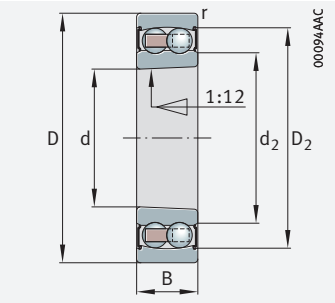

Tapered bore with seal 2RS

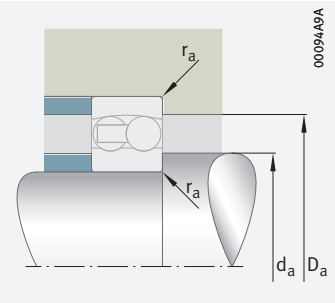

Mounting dimensions

Dimensions						Mounting dimensions			Calculation factors			
d	r	D_1	D_2	d_1	d_2	d_a	D_a	r_a	e	Y_1	Y_2	Y_0
	min.	≈	≈	≈	≈	min.	max.	max.				
70	1,5	106,1	–	87,2	–	79	116	1,5	0,19	3,36	5,21	3,52
	1,5	106,1	–	87,2	–	79	116	1,5	0,19	3,36	5,21	3,52
	1,5	–	110,8	–	84,7	79	116	1,5	0,19	3,36	5,21	3,52
	1,5	108,9	–	87,6	–	79	116	1,5	0,27	2,34	3,62	2,45
	2,1	126,4	–	97,7	–	82	138	2,1	0,23	2,79	4,32	2,93
	2,1	127,2	–	91,9	–	82	138	2,1	0,38	1,65	2,55	1,73
75	1,5	113,6	–	93,7	–	84	121	1,5	0,19	3,32	5,15	3,48
	1,5	113,6	–	93,7	–	84	121	1,5	0,19	3,32	5,15	3,48
	1,5	114,3	–	93,3	–	84	121	1,5	0,26	2,47	3,82	2,59
	1,5	114,3	–	93,3	–	84	121	1,5	0,26	2,47	3,82	2,59
	2,1	134,8	–	104,8	–	87	148	2,1	0,23	2,77	4,29	2,9
	2,1	134,8	–	104,8	–	87	148	2,1	0,23	2,77	4,29	2,9
	2,1	135,2	–	100,5	–	87	148	2,1	0,38	1,64	2,54	1,72
	2,1	135,2	–	100,5	–	87	148	2,1	0,38	1,64	2,54	1,72
80	2	122,1	–	101,8	–	91	129	2	0,16	3,9	6,03	4,08
	2	122,1	–	102	–	91	129	2	0,16	3,9	6,03	4,08
	2	121	–	99,2	–	91	129	2	0,25	2,48	3,84	2,6
	2	121	–	99,2	–	91	129	2	0,25	2,48	3,84	2,6
	2,1	144,3	–	110,6	–	92	158	2,1	0,22	2,87	4,44	3
	2,1	144,3	–	110,6	–	92	158	2,1	0,22	2,87	4,44	3
	2,1	144,1	–	107,6	–	92	158	2,1	0,37	1,7	2,62	1,78
	2,1	144,1	–	107,6	–	92	158	2,1	0,37	1,7	2,62	1,78
85	2	130,4	–	107,5	–	96	139	2	0,17	3,73	5,78	3,91
	2	130,4	–	107,5	–	96	139	2	0,17	3,73	5,78	3,91
	2	130	–	105,2	–	96	139	2	0,26	2,46	3,81	2,58
	2	130	–	105,2	–	96	139	2	0,26	2,46	3,81	2,58
	3	151,9	–	117,2	–	99	166	2,5	0,22	2,88	4,46	3,02
	3	151,9	–	117,2	–	99	166	2,5	0,22	2,88	4,46	3,02
	3	152,2	–	114,4	–	99	166	2,5	0,37	1,68	2,61	1,76
	3	152,2	–	114,4	–	99	166	2,5	0,37	1,68	2,61	1,76

Self-aligning ball bearings

With cylindrical or tapered bore

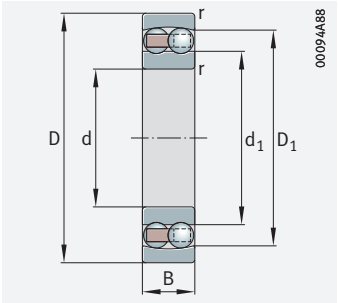

Cylindrical bore

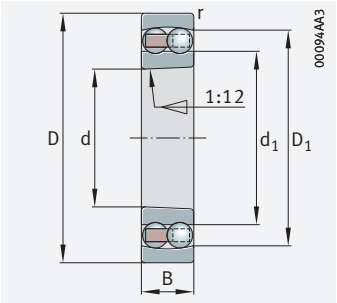

Tapered bore

d = 90 – 105 mm

Main dimensions			Basic load ratings		Fatigue limit load	Limiting speed	Speed rating	Mass	Designation
d	D	B	dyn. C_r	stat. C_{0r}	C_{ur}	n_G	$n_{\vartheta r}$	m	➤*381|1.12* ➤*381|1.13*
			N	N	N	min^{-1}	min^{-1}	≈ kg	
90	160	30	57 000	23 500	1 330	4 550	4 850	2,48	**1218-K-TVH-C3**
	160	30	57 000	23 500	1 330	4 550	4 850	2,52	**1218-TVH**
	160	40	71 000	28 500	1 630	4 400	5 200	3,18	**2218-K-TVH-C3**
	160	40	71 000	28 500	1 630	4 400	5 200	3,18	**2218-TVH**
	190	43	109 000	43 000	2 300	5 500	4 200	6,27	**1318-K-M-C3**
	190	43	109 000	43 000	2 300	5 500	4 200	6,35	**1318-M**
	190	64	156 000	58 000	3 100	5 100	5 000	8,38	**2318-K-M-C3**
	190	64	156 000	58 000	3 100	5 100	5 000	8,58	**2318-M**
95	170	32	64 000	27 000	1 490	6 300	4 600	3,28	**1219-K-M-C3**
	170	32	64 000	27 000	1 490	6 300	4 600	3,32	**1219-M**
	170	43	84 000	34 500	1 890	6 100	5 000	4,24	**2219-K-M-C3**
	170	43	84 000	34 500	1 890	6 100	5 000	4,33	**2219-M**
	200	45	134 000	51 000	2 650	5 100	4 050	7,2	**1319-K-M-C3**
	200	45	134 000	51 000	2 650	5 100	4 050	7,29	**1319-M**
	200	67	167 000	64 000	3 350	4 800	4 750	9,97	**2319-K-M-C3**
	200	67	167 000	64 000	3 350	4 800	4 750	10,2	**2319-M**
100	180	34	70 000	29 500	1 590	6 000	4 500	3,94	**1220-K-M-C3**
	180	34	70 000	29 500	1 590	6 000	4 500	3,99	**1220-M**
	180	46	98 000	40 500	2 180	5 700	4 900	5,1	**2220-K-M-C3**
	180	46	98 000	40 500	2 180	5 700	4 900	5,21	**2220-M**
	215	47	145 000	57 000	2 900	4 700	3 850	8,95	**1320-K-M-C3**
	215	47	145 000	57 000	2 900	4 700	3 850	9,06	**1320-M**
	215	73	196 000	79 000	4 000	4 300	4 350	12,7	**2320-K-M-C3**
	215	73	196 000	79 000	4 000	4 300	4 350	12,9	**2320-M**
105	190	36	75 000	32 500	1 690	5 700	4 350	4,75	**1221-M**
	225	49	158 000	64 000	3 150	4 450	3 750	10,3	**1321-M**

medias *https://www.schaeffler.de/std/1F9A*

[1] The ball projection must be taken into consideration when designing the adjacent construction.

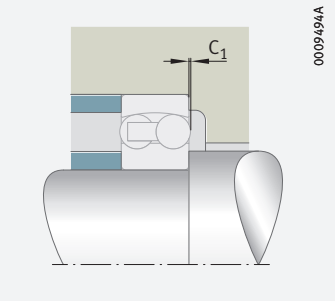

Ball projection C_1

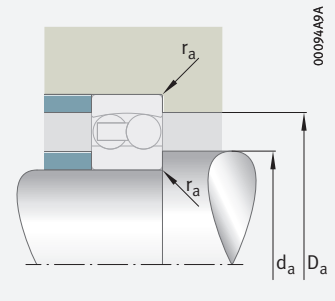

Mounting dimensions

Dimensions					Mounting dimensions			Calculation factors			
d	r	D_1	d_1	C_1 [1]	d_a	D_a	r_a	e	Y_1	Y_2	Y_0
	min.	≈	≈	≈	min.	max.	max.				
90	2	138,7	112,7	–	101	149	2	0,17	3,74	5,79	3,92
	2	138,7	112,7	–	101	149	2	0,17	3,74	5,79	3,92
	2	139,4	111,5	–	101	149	2	0,27	2,33	3,61	2,44
	2	139,4	111,5	–	101	149	2	0,27	2,33	3,61	2,44
	3	159,8	124,4	–	104	176	2,5	0,22	2,83	4,38	2,97
	3	159,8	124,4	–	104	176	2,5	0,22	2,83	4,38	2,97
	3	159,8	115,7	–	104	176	2,5	0,39	1,63	2,53	1,71
	3	159,8	115,7	–	104	176	2,5	0,39	1,63	2,53	1,71
95	2,1	148,2	120,5	–	107	158	2,1	0,17	3,73	5,78	3,91
	2,1	148,2	120,5	–	107	158	2,1	0,17	3,73	5,78	3,91
	2,1	147,9	118,9	–	107	158	2,1	0,27	2,32	3,59	2,43
	2,1	147,9	118,9	–	107	158	2,1	0,27	2,32	3,59	2,43
	3	169,9	127,6	1,6	109	186	2,5	0,23	2,73	4,23	2,86
	3	169,9	127,6	1,6	109	186	2,5	0,23	2,73	4,23	2,86
	3	167,7	121,6	–	109	186	2,5	0,38	1,66	2,57	1,74
	3	167,7	121,6	–	109	186	2,5	0,38	1,66	2,57	1,74
100	2,1	155,2	127,3	–	112	168	2,1	0,18	3,58	5,53	3,75
	2,1	155,2	127,3	–	112	168	2,1	0,18	3,58	5,53	3,75
	2,1	156,9	124,4	–	112	168	2,1	0,27	2,33	3,61	2,44
	2,1	156,9	124,4	–	112	168	2,1	0,27	2,33	3,61	2,44
	3	181,3	135,9	2,4	114	201	2,5	0,24	2,68	4,15	2,81
	3	181,3	135,9	2,4	114	201	2,5	0,24	2,68	4,15	2,81
	3	182,7	130,8	–	114	201	2,5	0,38	1,67	2,58	1,75
	3	182,7	130,8	–	114	201	2,5	0,38	1,67	2,58	1,75
105	2,1	155,2	133,9	–	117	178	2,1	0,18	3,54	5,48	3,71
	3	190,5	143,2	2,5	119	211	2,5	0,23	2,75	4,25	2,88

Self-aligning ball bearings

With cylindrical or tapered bore

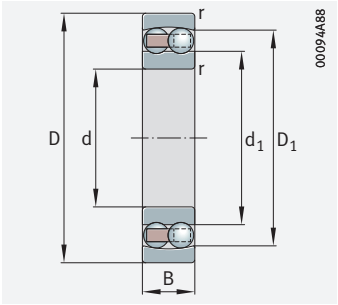

Cylindrical bore

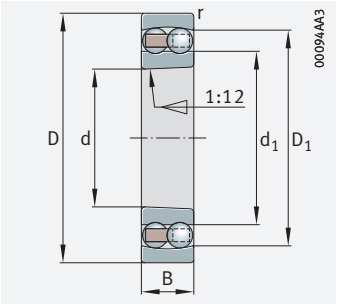

Tapered bore

d = 110 – 150 mm

Main dimensions			Basic load ratings		Fatigue limit load	Limiting speed	Speed rating	Mass	Designation
d	D	B	dyn. C_r	stat. C_{0r}	C_{ur}	n_G	$n_{\vartheta r}$	m	➤*381|1.12* ➤*381|1.13*
			N	N	N	min^{-1}	min^{-1}	≈ kg	
110	200	38	89 000	38 500	1 960	5 300	4 200	5,49	**1222-K-M-C3**
	200	38	89 000	38 500	1 960	5 300	4 200	5,57	**1222-M**
	200	53	126 000	52 000	2 650	5 000	4 700	7,27	**2222-K-M-C3**
	200	53	126 000	52 000	2 650	5 000	4 700	7,45	**2222-M**
	240	50	165 000	72 000	3 400	4 200	3 400	12,2	**1322-K-M-C3**
	240	50	165 000	72 000	3 400	4 200	3 400	12,3	**1322-M**
	240	80	221 000	95 000	4 550	3 850	3 900	17,5	**2322-K-M-C3**
	240	80	221 000	95 000	4 550	3 850	3 900	18,1	**2322-M**
120	215	42	121 000	53 000	2 600	4 750	4 200	7,13	**1224-M**
130	230	46	125 000	56 000	2 650	4 450	4 000	8,67	**1226-M**
140	250	50	163 000	74 000	3 350	3 900	3 650	11,2	**1228-M**
150	270	54	180 000	87 000	3 800	3 600	3 400	14,6	**1230-M**

medias *https://www.schaeffler.de/std/1F9A*

[1] The ball projection must be taken into consideration when designing the adjacent construction.

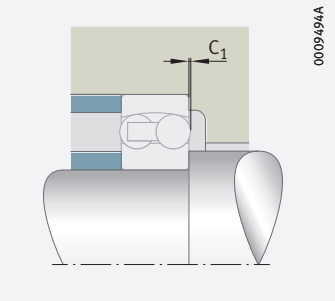

Ball projection C_1

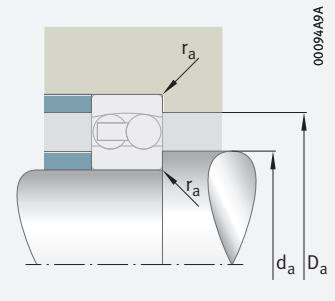

Mounting dimensions

Dimensions					Mounting dimensions			Calculation factors			
d	r min.	D_1 ≈	d_1 ≈	C_1 [1)] ≈	d_a min.	D_a max.	r_a max.	e	Y_1	Y_2	Y_0
110	2,1	173,2	140,2	–	122	188	2,1	0,17	3,61	5,59	3,78
	2,1	173,2	140,2	–	122	188	2,1	0,17	3,61	5,59	3,78
	2,1	174,1	136,9	–	122	188	2,1	0,28	2,23	3,45	2,33
	2,1	174,1	136,9	–	122	188	2,1	0,28	2,23	3,45	2,33
	3	202,5	154,5	2,7	124	226	2,5	0,23	2,79	4,32	2,92
	3	202,5	154,5	2,7	124	226	2,5	0,23	2,79	4,32	2,92
	3	201,8	145,5	–	124	226	2,5	0,37	1,69	2,62	1,77
	3	201,8	145,5	–	124	226	2,5	0,37	1,69	2,62	1,77
120	2,1	187,3	149	1,8	132	203	2,1	0,2	3,11	4,81	3,25
130	3	200	161,5	0,6	144	216	2,5	0,19	3,24	5,02	3,4
140	3	220,5	175	2,7	154	236	2,5	0,21	3,05	4,71	3,19
150	3	237,9	186,7	3,8	164	256	2,5	0,22	2,9	4,49	3,04

Self-aligning ball bearings

With extended inner ring

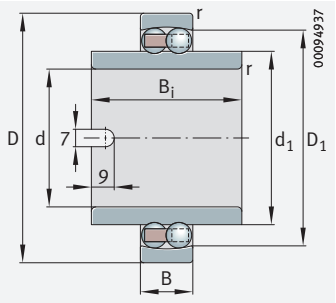

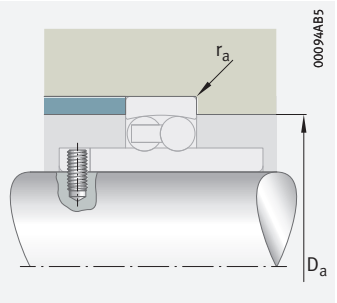

Mounting dimensions

d = 20 – 60 mm

Main dimensions			Basic load ratings		Fatigue limit load	Limiting speed	Mass	Designation
d	D	B	dyn. C_r	stat. C_{0r}	C_{ur}	n_G	m	➤*381|1.12* ➤*381|1.13*
			N	N	N	min^{-1}	≈ kg	
20	47	14	10 100	2 600	166	18 100	0,186	**11204-TVH**
25	52	15	12 300	3 300	209	15 500	0,22	**11205-TVH**
30	62	16	15 900	4 650	295	13 100	0,35	**11206-TVH**
35	72	17	16 000	5 100	325	11 600	0,54	**11207-TVH**
40	80	18	19 400	6 500	415	10 100	0,72	**11208-TVH**
45	85	19	22 000	7 300	465	9 300	0,77	**11209-TVH**
50	90	20	22 900	8 100	520	8 700	0,85	**11210-TVH**
55	100	21	27 000	10 000	630	7 700	1,17	**11211-TVH**
60	110	22	30 500	11 500	730	6 900	1,5	**11212-TVH**

medias *https://www.schaeffler.de/std/1F9A*

	Dimensions				Mounting dimensions		Calculation factors			
	d	r min.	B_i ≈	D_1 ≈	d_1 ≈	D_a max.	r_a max.	e	Y_1	Y_2	Y_0
	20	1	40	37,8	29,2	41,4	1	0,28	2,24	3,46	2,34
	25	1	44	43,6	33,3	46,4	1	0,27	2,37	3,66	2,48
	30	1	48	51,6	40,1	56,4	1	0,25	2,53	3,91	2,65
	35	1,1	52	59,1	47,7	65	1	0,22	2,8	4,34	2,94
	40	1,1	56	67,3	54	73	1	0,22	2,9	4,49	3,04
	45	1,1	58	72,1	57,7	78	1	0,21	3,04	4,7	3,18
	50	1,1	58	77,1	62,7	83	1	0,2	3,17	4,9	3,32
	55	1,5	60	86,4	69,5	91	1,5	0,19	3,31	5,12	3,47
	60	1,5	62	95,2	78	101	1,5	0,18	3,47	5,37	3,64

Self-aligning ball bearings

With adapter sleeve

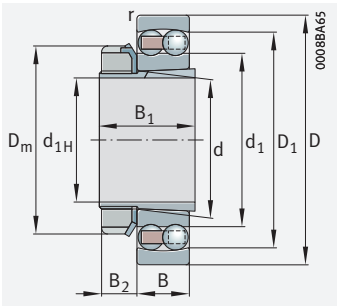

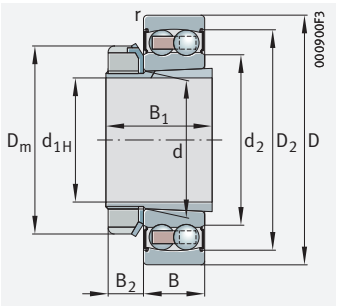

With seal 2RS

d_{1H} = 17 – 45 mm

Main dimensions				Basic load ratings		Fatigue limit load	Limiting speed	Speed rating	Mass m		Designation ➤381|1.12 ➤381|1.13	
d_{1H}	d	D	B	dyn. C_r N	stat. C_{0r} N	C_{ur} N	n_G min^{-1}	$n_{\vartheta r}$ min^{-1}	Bearing ≈ kg	Adapter sleeve ≈ kg	Bearing	Adapter sleeve
17	20	47	14	10 100	2 600	166	18 100	15 300	0,116	0,04	**1204-K-TVH-C3**	**H204**
20	25	52	15	12 300	3 300	209	15 500	13 400	0,135	0,07	**1205-K-TVH-C3**	**H205**
	25	52	18	12 300	3 300	209	8 100	–	0,157	0,07	**2205-K-2RS-TVH-C3**	**H305**
	25	52	18	17 300	4 450	285	14 400	13 400	0,152	0,07	**2205-K-TVH-C3**	**H305**
	25	62	17	18 300	5 000	320	12 900	10 000	0,254	0,07	**1305-K-TVH-C3**	**H305**
	25	62	24	25 000	6 600	420	12 200	11 900	0,328	0,09	**2305-K-TVH-C3**	**H2305**
25	30	62	16	15 900	4 650	295	13 100	11 400	0,217	0,1	**1206-K-TVH-C3**	**H206**
	30	62	20	15 900	4 650	295	6 800	–	0,268	0,11	**2206-K-2RS-TVH-C3**	**H306**
	30	62	20	26 000	6 900	440	11 500	11 400	0,246	0,11	**2206-K-TVH-C3**	**H306**
	30	72	19	21 700	6 300	400	11 100	8 700	0,379	0,11	**1306-K-TVH-C3**	**H306**
	30	72	27	32 500	8 800	560	10 200	10 400	0,476	0,13	**2306-K-TVH-C3**	**H2306**
30	35	72	17	16 000	5 100	325	11 600	9 800	0,319	0,136	**1207-K-TVH-C3**	**H207**
	35	72	23	16 000	5 100	325	5 600	–	0,432	0,153	**2207-K-2RS-TVH-C3**	**H307**
	35	72	23	33 000	9 000	570	9 800	10 300	0,38	0,153	**2207-K-TVH-C3**	**H307**
	35	80	21	25 500	7 900	500	9 700	7 800	0,5	0,153	**1307-K-TVH-C3**	**H307**
	35	80	31	40 500	11 200	710	8 900	9 800	0,657	0,16	**2307-K-TVH-C3**	**H2307**
35	40	80	18	19 400	6 500	415	10 100	8 600	0,408	0,177	**1208-K-TVH-C3**	**H208**
	40	80	23	19 400	6 500	415	4 950	–	0,517	0,192	**2208-K-2RS-TVH-C3**	**H308**
	40	80	23	32 500	9 500	600	8 900	8 700	0,465	0,192	**2208-K-TVH-C3**	**H308**
	40	90	23	30 000	9 700	610	8 600	7 200	0,698	0,192	**1308-K-TVH-C3**	**H308**
	40	90	33	46 000	13 500	860	7 900	8 700	0,899	0,23	**2308-K-TVH-C3**	**H2308**
40	45	85	19	22 000	7 300	465	9 300	8 200	0,454	0,23	**1209-K-TVH-C3**	**H209**
	45	85	23	22 000	7 300	465	4 650	–	0,535	0,253	**2209-K-2RS-TVH-C3**	**H309**
	45	85	23	28 500	9 000	570	8 600	7 800	0,505	0,253	**2209-K-TVH-C3**	**H309**
	45	100	25	38 500	12 700	810	7 500	6 700	0,939	0,253	**1309-K-TVH-C3**	**H309**
	45	100	36	55 000	16 600	1 060	7 000	8 000	1,19	0,298	**2309-K-TVH-C3**	**H2309**
45	50	90	20	22 900	8 100	520	8 700	7 700	0,516	0,276	**1210-K-TVH-C3**	**H210**
	50	90	23	22 900	8 100	520	4 250	–	0,593	0,306	**2210-K-2RS-TVH-C3**	**H310**
	50	90	23	28 500	9 500	600	8 100	7 100	0,543	0,306	**2210-K-TVH-C3**	**H310**
	50	110	27	42 000	14 200	900	6 900	6 300	1,19	0,306	**1310-K-TVH-C3**	**H310**

medias *https://www.schaeffler.de/std/1F9A*

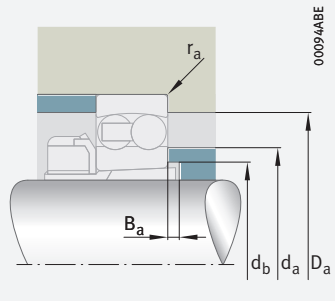

Mounting dimensions

Dimensions									Mounting dimensions					Calculation factors			
d_{1H}	r min.	D_1 ≈	D_2 ≈	d_1 ≈	d_2 ≈	D_m	B_1	B_2 ≈	d_a max.	D_a max.	d_b min.	B_a min.	r_a max.	e	Y_1	Y_2	Y_0
17	1	37,8	–	29,2	–	32	24	7	27	41,4	23	5	1	0,28	2,24	3,46	2,34
20	1	43,6	–	33,3	–	38	26	8,25	32	46,4	28	5	1	0,27	2,37	3,66	2,48
	1	–	45,3	–	30,7	38	29	8,25	32	46,4	28	5	1	0,27	2,37	3,66	2,48
	1	44,4	–	32,3	–	38	29	8,25	32	46,4	28	5	1	0,35	1,78	2,75	1,86
	1,1	50,4	–	38,1	–	38	29	8,25	35	55	28	6	1	0,28	2,29	3,54	2,4
	1,1	49,9	–	35,5	–	38	35	8,25	34	55	30	5	1	0,48	1,32	2,04	1,38
25	1	51,6	–	40,1	–	45	27	8,25	38	56,4	33	5	1	0,25	2,53	3,91	2,65
	1	–	53,3	–	37,3	45	31	8,25	38	56,4	33	5	1	0,25	2,53	3,91	2,65
	1	53,7	–	38,5	–	45	31	8,25	38	56,4	33	5	1	0,3	2,13	3,29	2,23
	1,1	58,9	–	45,1	–	45	31	8,25	42	65	33	6	1	0,26	2,39	3,71	2,51
	1,1	58,8	–	41,5	–	45	38	8,25	40	65	35	5	1	0,45	1,4	2,17	1,47
30	1,1	59,1	–	47,7	–	52	29	9,25	45	65	38	5	1	0,22	2,8	4,34	2,94
	1,1	–	63,4	–	43,5	52	35	9,25	45	65	38	5	1	0,22	2,8	4,34	2,94
	1,1	62,4	–	45,7	–	52	35	9,25	44	65	39	5	1	0,3	2,13	3,29	2,23
	1,5	70,1	–	51,3	–	52	35	9,25	49	71	39	8	1,5	0,26	2,47	3,82	2,59
	1,5	66,1	–	46,9	–	52	43	9,25	45	71	40	5	1,5	0,47	1,35	2,1	1,42
35	1,1	67,3	–	54	–	58	31	10,25	52	73	43	5	1	0,22	2,9	4,49	3,04
	1,1	–	70,3	–	49,2	58	36	10,25	52	73	43	5	1	0,22	2,9	4,49	3,04
	1,1	70,2	–	52,5	–	58	36	10,25	50	73	44	5	1	0,26	2,43	3,76	2,54
	1,5	74,7	–	57,8	–	58	36	10,25	55	81	44	5	1,5	0,25	2,52	3,9	2,64
	1,5	74,5	–	53,7	–	58	46	10,25	51	81	45	5	1,5	0,43	1,45	2,25	1,52
40	1,1	72,1	–	57,7	–	65	33	11,25	57	78	48	5	1	0,21	3,04	4,7	3,18
	1,1	–	76	–	53,8	65	39	11,25	57	78	48	5	1	0,21	3,04	4,7	3,18
	1,1	75,4	–	59	–	65	39	11,25	56	78	50	8	1	0,26	2,43	3,76	2,54
	1,5	83,5	–	64,1	–	65	39	11,25	61	91	50	5	1,5	0,25	2,5	3,87	2,62
	1,5	83,6	–	60,1	–	65	50	11,25	57	91	50	5	1,5	0,43	1,48	2,29	1,55
45	1,1	77,1	–	62,7	–	70	35	12,25	62	83	53	5	1	0,2	3,17	4,9	3,32
	1,1	–	79	–	60,5	70	42	12,25	62	83	53	5	1	0,2	3,17	4,9	3,32
	1,1	80,5	–	64	–	70	42	12,25	61	83	55	10	1	0,24	2,61	4,05	2,74
	2	91,7	–	71,2	–	70	42	12,25	68	99	55	5	2	0,24	2,6	4,03	2,73

Self-aligning ball bearings

With adapter sleeve

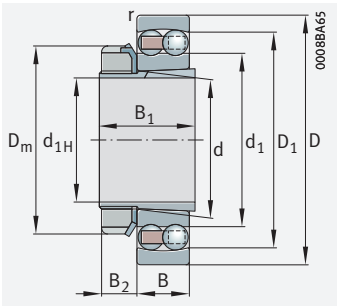

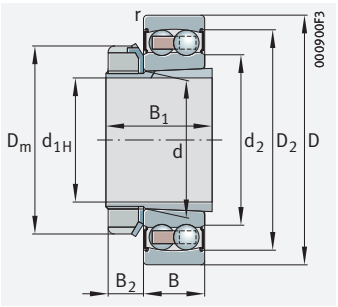

With seal 2RS

d_{1H} = 50 – 75 mm

Main dimensions				Basic load ratings		Fatigue limit load	Limiting speed	Speed rating	Mass m		Designation ➤381|1.12 ➤381|1.13	
d_{1H}	d	D	B	dyn. C_r N	stat. C_{0r} N	C_{ur} N	n_G min^{-1}	$n_{\vartheta r}$ min^{-1}	Bearing ≈ kg	Adapter sleeve ≈ kg	Bearing	Adapter sleeve
50	55	100	21	27 000	10 000	630	7 700	6 900	0,682	0,319	**1211-K-TVH-C3**	**H211**
	55	100	25	27 000	10 000	630	3 850	–	0,808	0,358	**2211-K-2RS-TVH-C3**	**H311**
	55	100	25	39 000	12 500	790	7 000	6 700	0,73	0,358	**2211-K-TVH-C3**	**H311**
	55	120	29	52 000	17 900	1 130	6 100	5 800	1,55	0,358	**1311-K-TVH-C3**	**H311**
	55	120	43	77 000	24 000	1 520	5 700	7 100	2,02	0,435	**2311-K-TVH-C3**	**H2311**
55	60	110	22	30 500	11 500	730	6 900	6 300	0,88	0,35	**1212-K-TVH-C3**	**H212**
	60	110	28	30 500	11 500	730	3 450	–	1,13	0,401	**2212-K-2RS-TVH-C3**	**H312**
	60	110	28	48 000	16 500	1 040	6 300	6 400	1,03	0,401	**2212-K-TVH-C3**	**H312**
	60	130	31	58 000	20 800	1 320	5 500	5 200	1,94	0,401	**1312-K-TVH-C3**	**H312**
	60	130	46	89 000	28 000	1 790	5 200	6 700	2,52	0,493	**2312-K-TVH-C3**	**H2312**
60	65	120	23	31 000	12 500	790	6 500	5 800	1,13	0,4	**1213-K-TVH-C3**	**H213**
	65	120	31	31 000	12 500	790	3 150	–	1,5	0,471	**2213-K-2RS-TVH-C3**	**H313**
	65	120	31	58 000	19 200	1 220	5 600	6 200	1,33	0,471	**2213-K-TVH-C3**	**H313**
	65	140	33	63 000	22 900	1 420	5 200	5 100	2,41	0,471	**1313-K-TVH-C3**	**H313**
	65	140	48	98 000	32 500	2 040	4 750	6 100	3,16	0,57	**2313-K-TVH-C3**	**H2313**
	70	125	24	35 000	13 800	880	6 200	5 900	1,23	0,63	**1214-K-TVH-C3**	**H214**
65	75	130	25	39 000	15 700	980	5 700	5 500	1,32	0,71	**1215-K-TVH-C3**	**H215**
	75	130	31	44 500	17 800	1 110	5 600	5 600	1,6	0,86	**2215-K-TVH-C3**	**H315**
	75	160	37	80 000	30 000	1 740	6 700	4 750	3,52	1,06	**1315-K-M-C3**	**H315**
	75	160	55	125 000	42 500	2 490	6 100	5 600	5,21	0,89	**2315-K-M-C3**	**H2315**
70	80	140	26	40 000	17 000	1 020	5 300	5 100	1,62	0,89	**1216-K-TVH-C3**	**H216**
	80	140	33	49 500	19 900	1 210	5 300	5 400	1,97	1,06	**2216-K-TVH-C3**	**H316**
	80	170	39	89 000	33 000	1 870	6 200	4 500	4,5	1,06	**1316-K-M-C3**	**H316**
	80	170	58	139 000	48 500	2 750	5 700	5 400	6,05	1,31	**2316-K-M-C3**	**H2316**
75	85	150	28	49 500	20 800	1 210	4 900	4 950	2,03	1,03	**1217-K-TVH-C3**	**H217**
	85	150	36	59 000	23 600	1 380	7 200	5 200	2,73	1,21	**2217-K-M-C3**	**H317**
	85	180	41	99 000	38 000	2 070	5 800	4 300	5,32	1,21	**1317-K-M-C3**	**H317**
	85	180	60	143 000	51 000	2 850	5 400	5 200	7,04	1,47	**2317-K-M-C3**	**H2317**

medias *https://www.schaeffler.de/std/1F9A*

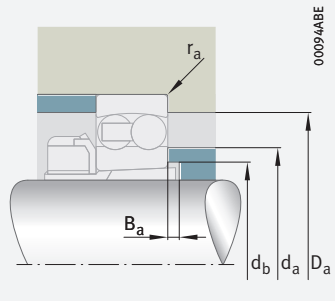

Mounting dimensions

Dimensions									Mounting dimensions					Calculation factors			
d_{1H}	r	D_1	D_2	d_1	d_2	D_m	B_1	B_2	d_a	D_a	d_b	B_a	r_a	e	Y_1	Y_2	Y_0
	min.	≈	≈	≈	≈			≈	max.	max.	min.	min.	max.				
50	1,5	86,4	–	69,5	–	75	37	12,5	69	91	60	6	1,5	0,19	3,31	5,12	3,47
	1,5	–	88,2	–	68	75	45	12,5	69	91	60	6	1,5	0,19	3,31	5,12	3,47
	1,5	89,8	–	69,6	–	75	45	12,5	68	91	60	10	1,5	0,22	2,92	4,52	3,06
	2	101	–	78	–	75	45	12,5	74	109	60	6	2	0,24	2,66	4,12	2,79
	2	100,2	–	71,7	–	75	59	12,5	69	109	61	6	2	0,42	1,51	2,33	1,58
55	1,5	95,2	–	78	–	80	38	12,5	75	101	64	5	1,5	0,18	3,47	5,37	3,64
	1,5	–	99,5	–	70,4	80	47	12,5	75	101	64	5	1,5	0,18	3,47	5,37	3,64
	1,5	98,2	–	76,6	–	80	47	12,5	73	101	65	8	1,5	0,23	2,69	4,16	2,82
	2,1	112,2	–	87	–	80	47	12,5	83	118	65	5	2,1	0,23	2,77	4,28	2,9
	2,1	108,5	–	77	–	80	62	12,5	74	118	66	5	2,1	0,41	1,55	2,4	1,62
60	1,5	102,7	–	85,2	–	85	40	13,5	83	111	70	5	1,5	0,18	3,57	5,52	3,74
	1,5	–	107,8	–	78	85	50	13,5	83	111	70	5	1,5	0,18	3,57	5,52	3,74
	1,5	106,9	–	82,4	–	85	50	13,5	79	111	70	8	1,5	0,23	2,78	4,31	2,92
	2,1	118,2	–	92,7	–	85	50	13,5	89	128	70	5	2,1	0,23	2,75	4,26	2,88
	2,1	118,3	–	85,6	–	85	65	13,5	82	128	72	5	2,1	0,39	1,62	2,51	1,7
	1,5	106,1	–	87,2	–	92	41	13,5	86	116	75	5	1,5	0,19	3,36	5,21	3,52
65	1,5	113,6	–	93,7	–	98	43	14,5	92	121	80	5	1,5	0,19	3,32	5,15	3,48
	1,5	114,3	–	93,3	–	98	55	14,5	90	121	80	12	1,5	0,26	2,47	3,82	2,59
	2,1	134,8	–	104,8	–	98	55	14,5	100	148	80	5	2,1	0,23	2,77	4,29	2,9
	2,1	135,2	–	100,5	–	98	73	14,5	94	148	82	5	2,1	0,38	1,64	2,54	1,72
70	2	122,1	–	101,8	–	105	46	16,75	99	129	85	5	2	0,16	3,9	6,03	4,08
	2	121	–	99,2	–	105	59	16,75	96	129	85	12	2	0,25	2,48	3,84	2,6
	2,1	144,3	–	110,6	–	105	59	16,75	107	158	85	5	2,1	0,22	2,87	4,44	3
	2,1	144,1	–	107,6	–	105	78	16,75	100	158	88	5	2,1	0,37	1,7	2,62	1,78
75	2	130,4	–	107,5	–	110	50	17,75	105	139	90	6	2	0,17	3,73	5,78	3,91
	2	130	–	105,2	–	110	63	17,75	102	139	91	12	2	0,26	2,46	3,81	2,58
	3	151,9	–	117,2	–	110	63	17,75	114	166	91	6	2,5	0,22	2,88	4,46	3,02
	3	152,2	–	114,4	–	110	82	17,75	106	166	94	6	2,5	0,37	1,68	2,61	1,76

Self-aligning ball bearings

With adapter sleeve

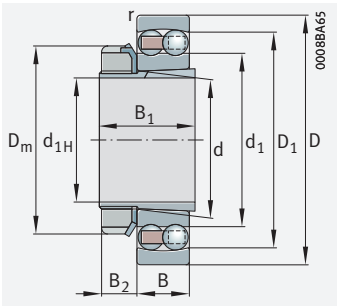

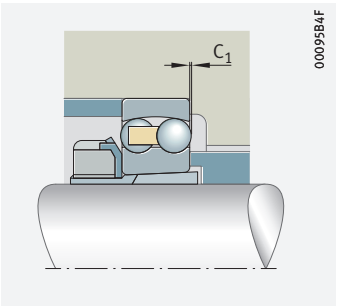

Ball projection C_1[1)]

d_{1H} = 80 – 100 mm

Main dimensions				Basic load ratings		Fatigue limit load	Limiting speed	Speed rating	Mass m		Designation ➤381|1.12 ➤381|1.13	
d_{1H}	d	D	B	dyn. C_r N	stat. C_{0r} N	C_{ur} N	n_G min^{-1}	$n_{\vartheta r}$ min^{-1}	Bearing ≈ kg	Adapter sleeve ≈ kg	Bearing	Adapter sleeve
80	90	160	30	57 000	23 500	1 330	4 550	4 850	2,48	1,21	**1218-K-TVH-C3**	**H218**
	90	160	40	71 000	28 500	1 630	4 400	5 200	3,18	1,41	**2218-K-TVH-C3**	**H318**
	90	190	43	109 000	43 000	2 300	5 500	4 200	6,27	1,41	**1318-K-M-C3**	**H318**
	90	190	64	156 000	58 000	3 100	5 100	5 000	8,38	1,71	**2318-K-M-C3**	**H2318**
85	95	170	32	64 000	27 000	1 490	6 300	4 600	3,28	1,39	**1219-K-M-C3**	**H219**
	95	170	43	84 000	34 500	1 890	6 100	5 000	4,24	1,58	**2219-K-M-C3**	**H319**
	95	200	45	134 000	51 000	2 650	5 100	4 050	7,2	1,58	**1319-K-M-C3**	**H319**
	95	200	67	167 000	64 000	3 350	4 800	4 750	9,97	1,95	**2319-K-M-C3**	**H2319**
90	100	180	34	70 000	29 500	1 590	6 000	4 500	3,94	1,52	**1220-K-M-C3**	**H220**
	100	180	46	98 000	40 500	2 180	5 700	4 900	5,1	1,76	**2220-K-M-C3**	**H320**
	100	215	47	145 000	57 000	2 900	4 700	3 850	8,95	1,76	**1320-K-M-C3**	**H320**
	100	215	73	196 000	79 000	4 000	4 300	4 350	12,7	2,2	**2320-K-M-C3**	**H2320**
100	110	200	38	89 000	38 500	1 960	5 300	4 200	5,49	1,95	**1222-K-M-C3**	**H222**
	110	200	53	126 000	52 000	2 650	5 000	4 700	7,27	2,25	**2222-K-M-C3**	**H322**
	110	240	50	165 000	72 000	3 400	4 200	3 400	12,2	2,25	**1322-K-M-C3**	**H322**
	110	240	80	221 000	95 000	4 550	3 850	3 900	17,5	2,78	**2322-K-M-C3**	**H2322**

medias *https://www.schaeffler.de/std/1F9A*

1) The ball projection must be taken into consideration when designing the adjacent construction.

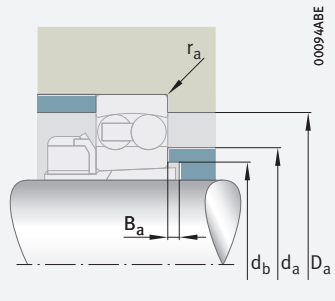

Mounting dimensions

Dimensions								Mounting dimensions					Calculation factors			
d_{1H}	r min.	D_1 ≈	d_1 ≈	D_m	B_1	B_2 ≈	C_1 [1]	d_a max.	D_a max.	d_b min.	B_a min.	r_a max.	e	Y_1	Y_2	Y_0
80	2	138,7	112,7	120	52	17,75	–	110	149	95	6	2	0,17	3,74	5,79	3,92
	2	139,4	111,5	120	65	17,75	–	108	149	96	10	2	0,27	2,33	3,61	2,44
	3	159,8	124,4	120	65	17,75	–	120	176	96	6	2,5	0,22	2,83	4,38	2,97
	3	159,8	115,7	120	86	17,75	–	112	176	100	6	2,5	0,39	1,63	2,53	1,71
85	2,1	148,2	120,5	125	55	18,75	–	117	158	100	7	2,1	0,17	3,73	5,78	3,91
	2,1	147,9	118,9	125	68	18,75	–	114	158	102	9	2,1	0,27	2,32	3,59	2,43
	3	169,9	127,6	125	68	18,75	1,6	126	186	102	7	2,5	0,23	2,73	4,23	2,86
	3	167,7	121,6	125	90	18,75	–	117	186	105	7	2,5	0,38	1,66	2,57	1,74
90	2,1	155,2	127,3	130	58	19,75	–	124	168	106	7	2,1	0,18	3,58	5,53	3,75
	2,1	156,9	124,4	130	71	19,75	–	120	168	108	8	2,1	0,27	2,33	3,61	2,44
	3	181,3	135,9	130	71	19,75	2,4	132	201	108	7	2,5	0,24	2,68	4,15	2,81
	3	182,7	130,8	130	97	19,75	–	125	201	110	7	2,5	0,38	1,67	2,58	1,75
100	2,1	173,2	140,2	145	63	20,75	–	138	188	116	7	2,1	0,17	3,61	5,59	3,78
	2,1	174,1	136,9	145	77	20,75	–	132	188	118	6	2,1	0,28	2,23	3,45	2,33
	3	202,5	154,5	145	77	20,75	2,7	150	226	118	9	2,5	0,23	2,79	4,32	2,92
	3	201,8	145,5	145	105	20,75	–	139	226	121	7	2,5	0,37	1,69	2,62	1,77

Cylindrical roller bearings



Matrix for bearing preselection 414

1 Single row cylindrical roller bearings with cage 416

1.1 Bearing design 416
1.2 Load carrying capacity 421
1.3 Compensation of angular misalignments 424
1.4 Lubrication 424
1.5 Sealing 424
1.6 Speeds 424
1.7 Noise 425
1.8 Temperature range 426
1.9 Cages 426
1.10 Internal clearance 428
1.11 Dimensions, tolerances 429
1.12 Suffixes 429
1.13 Structure of bearing designation 430
1.14 Dimensioning 430
1.15 Minimum load 431
1.16 Design of bearing arrangements 432

1.17 Mounting and dismounting 435
1.18 Legal notice regarding data freshness 435
1.19 Further information 436

Product tables 438
Cylindrical roller bearings with cage, non-locating bearings 438
Cylindrical roller bearings with cage, semi-locating bearings, locating bearings 454

2 Cylindrical roller bearings with disc cage or with spacers 482
2.1 Bearing design 482
2.2 Load carrying capacity 484
2.3 Compensation of angular misalignments 487
2.4 Lubrication 488
2.5 Sealing 488
2.6 Speeds 488
2.7 Noise 489
2.8 Temperature range 490
2.9 Cages 490
2.10 Internal clearance 491
2.11 Dimensions, tolerances 492
2.12 Suffixes 492
2.13 Structure of bearing designation 492
2.14 Dimensioning 493
2.15 Minimum load 494
2.16 Design of bearing arrangements 494
2.17 Mounting and dismounting 496
2.18 Legal notice regarding data freshness 497
2.19 Further information 497

Product tables 498
Cylindrical roller bearings with disc cage, semi-locating bearings 498
Cylindrical roller bearings with spacers, semi-locating bearings 500

3 Single row full complement cylindrical roller bearings 502
3.1 Bearing design 502
3.2 Load carrying capacity 505
3.3 Compensation of angular misalignments 508
3.4 Lubrication 508
3.5 Sealing 508
3.6 Speeds 509
3.7 Noise 509
3.8 Temperature range 510
3.9 Cages 510
3.10 Internal clearance 511
3.11 Dimensions, tolerances 511
3.12 Suffixes 512
3.13 Structure of bearing designation 512
3.14 Dimensioning 512
3.15 Minimum load 513
3.16 Design of bearing arrangements 513
3.17 Mounting and dismounting 516
3.18 Legal notice regarding data freshness 516
3.19 Further information 517

Product table 518
Single row full complement cylindrical roller bearings 518

4 Double row full complement cylindrical roller bearings 528
4.1 Bearing design 528
4.2 Load carrying capacity 532
4.3 Compensation of angular misalignments 535
4.4 Lubrication 535
4.5 Sealing 535
4.6 Speeds 535
4.7 Noise 536
4.8 Temperature range 537
4.9 Cages 537
4.10 Internal clearance 538
4.11 Dimensions, tolerances 539
4.12 Suffixes 539
4.13 Structure of bearing designation 540
4.14 Dimensioning 540
4.15 Minimum load 541
4.16 Design of bearing arrangements 542
4.17 Mounting and dismounting 546
4.18 Legal notice regarding data freshness 547
4.19 Further information 547

Product tables 548
Double row full complement cylindrical roller bearings 548
Double row full complement cylindrical roller bearings with annular slots 556

Matrix for bearing preselection

The matrix gives an overview of the types and design features.

It can be used to make a preliminary assessment of whether a bearing is fundamentally suitable for the envisaged application.

The additional information provided in the product chapter (see column "detailed information") and in the Technical principles must, however, be observed in addition to this overview in selection of the bearing.

Design features and suitability			Cylindrical roller bearings with cage, single row			
+++ extremely suitable ++ highly suitable + suitable (+) suitable with restrictions – not suitable/not applicable ✓ available			non-locating bearing	semi-locating bearing	locating bearing	detailed information ➤ 416
Load carrying capacity	radial		+++	+++	+++	➤ 421|1.2
	axial, one direction		–	+	+	➤ 421|1.2
	axial, both directions		–	–	+	➤ 421|1.2
	moments		–	–	–	➤ 421|1.2
Compensation of angular misalignments	static		(+)	(+)	(+)	➤ 424|1.3
	dynamic		(+)	(+)	(+)	➤ 424|1.3
Bearing design	cylindrical bore		✓	✓	✓	➤ 416|1.1
	tapered bore		–	–	–	
	separable		✓	✓	✓	➤ 435|1.17
Lubrication	greased		–	–	–	➤ 424|1.4
Sealing	open		✓	✓	✓	➤ 424|1.5
	non-contact		–	–	–	➤ 424|1.5
	contact		–	–	–	➤ 424|1.5
Operating temperature in °C	from to		–30+1 50[3]	–30+1 50[3]	–30+1 50[3]	➤ 426|1.8
Suitability for	high speeds		++	++[5]	++[5]	➤ 424|1.6 ➤ 24
	high running accuracy		++	++	++	➤ 429|1.11 ➤ 115
	low-noise running		+	(+)	(+)	➤ 425|1.7 ➤ 27
	high rigidity		++	++	++	➤ 54
	reduced friction		++	++	++	➤ 56
	length compensation within bearing		+++	(+)	–	➤ 417 ➤ 25
	non-locating bearing arrangement		+++	+	–	➤ 141
	locating bearing arrangement		–	+	++	➤ 141
X-life bearings			✓	✓	✓	➤ 419
Bearing bore d in mm	from to		15 710[8]	15 280[8]	15 280[8]	➤ 438
Product tables	from page ➤		438	454	454	

1) Valid only for series SL1923
2) Valid only for non-locating bearings SL0248 and SL0249
3) Valid for bearings with sheet steel cage or brass cage
4) With greasing using GA22
5) For low axial load only
6) Valid for locating bearings SL0148 and SL0149
7) Only semi-locating bearings SL1850
8) Larger catalogue bearings GL 1

	Cylindrical roller bearings with disc cage or spacers			Single row full complement cylindrical roller bearings		Double row full complement cylindrical roller bearings			
	with disc cage	with spacers	detailed information ➤ 482	semi-locating bearing	detailed information ➤ 502	locating/semi-locating/non-locating bearing	locating bearing with annular slots	detailed information ➤ 528	
	+++	+++	➤484|2.2	+++	➤505|3.2	+++	+++	➤532|4.2	F_r
	+	+	➤484|2.2	+	➤505|3.2	(+)	(+)	➤532|4.2	F_a
	–	–	➤484|2.2	–	➤505|3.2	(+)	(+)	➤532|4.2	F_a
	–	–	➤484|2.2	–	➤505|3.2	+	+	➤532|4.2	M
	(+)	(+)	➤487|2.3	(+)	➤508|3.3	–	–	➤535|4.3	
	(+)	(+)	➤487|2.3	(+)	➤508|3.3	–	–	➤535|4.3	
	✓	✓	➤482|2.1	✓	➤508|3.3	✓	✓	➤535|4.3	
	–	–		–		–	–		
	✓	✓	➤496|2.17	✓[1]	➤516|3.17	✓[2]	–	➤546|4.17	
	–	–	➤488|2.4	–	➤508|3.4	–	✓	➤535|4.4	
	✓	✓	➤488|2.5	✓	➤508|3.5	✓	–	➤535|4.5	
	–	–	➤488|2.5	–	➤508|3.5	–	–	➤535|4.5	
	–	–	➤488|2.5	–	➤508|3.5	–	✓	➤535|4.5	
	–30 +120	–30 +120	➤490|2.8	–30 +120	➤510|3.8	–30 +120	–40[4] +80	➤537|4.8	
	++	++	➤488|2.6	–	➤509|3.6	–	–	➤535|4.6	n
	+	(+)	➤492|2.11 ➤24	+	➤511|3.11 ➤24	+	+	➤539|4.11 ➤24	
	(+)	(+)	➤489|2.7 ➤27	–	➤509|3.7	–	–	➤536|4.7	
	++	++	➤54	+++	➤54	+++	+++	➤54	
	+	+	➤56	–	➤56	–	–	➤56	
	(+)	(+)	➤25	(+)	➤25	–[6]	–	➤529 ➤25	
	+	+	➤141	+	➤141	+[6]	+	➤141	
	+	+	➤141	+	➤141	+[6]	+	➤141	
	✓	✓	➤484	✓	➤504	✓[7]	–	➤531	X-life
	80 300[8]	25 120	➤498	20 500[8]	➤518	20 400[8]	20 300[8]	➤548	
	498	500		518		548	556		

1 Single row cylindrical roller bearings with cage

Single row cylindrical roller bearings with cage are suitable where:

- bearing arrangements are subjected to very high radial loads ➤*421|1.2*
- not only high radial forces but also axial loads from one or both directions must be supported by the bearing position (semi-locating or locating bearing function) ➤*421|1.2*
- bearing arrangements must have very high rigidity
- axial displacements of the shaft relative to the housing must be compensated without constraint in the bearing (in the case of bearings with a non-locating or semi-locating bearing function) ➤*416|1.1*
- high radial loads and very high speeds occur but the very high radial load carrying capacity of full complement cylindrical roller bearings is not required ➤*424|1.6*
- the bearings should be separable (one bearing ring can be removed) for easier mounting ➤*416|1.1*

For an overview of other product-specific features, see the Matrix for bearing preselection ➤*414*.

1
Cylindrical roller bearing with cage/full complement bearing, comparison of speed and load carrying capacity

n_G = *limiting speed*
C_r = *basic dynamic load rating*
SL1923 = *full complement cylindrical roller bearing*
NJ23 = *cylindrical roller bearing with cage*

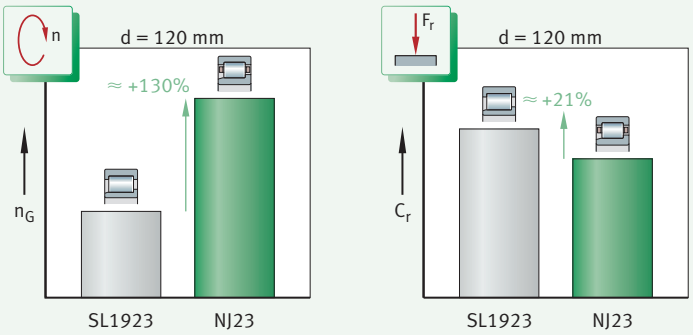

1.1 Bearing design

✎ *Design variants*

Single row cylindrical roller bearings with cage are available in the basic design as:

- type NU (non-locating bearing) ➤*418|3*
- type N (non-locating bearing) ➤*418|3*
- type NJ (semi-locating bearing) ➤*418|4*
- type NUP (locating bearing) ➤*418|4*
- X-life bearings ➤*419*

In addition to the bearings described here, Schaeffler supplies single row cylindrical roller bearings with cage in other types, series and dimensions. These products are described in some cases in special publications. If necessary, please contact Schaeffler. Larger catalogue bearings GL 1.

Bearings of basic design – standard range

Key features

Single row cylindrical roller bearings with cage are part of the group of radial roller bearings. In contrast to the ball, the roller has a larger contact area perpendicular to the roller axis. As a result, it can transmit higher forces, has greater rigidity and allows smaller rolling element diameters under the same load. The single row bearings comprise solid outer rings, inner rings and cages that are fitted with a large number of cylindrical rollers. The rollers have profiled ends, i.e. they have a slight lateral curvature towards the ends. This modified line contact between the rolling elements and raceways prevents damaging edge stresses ➤417|2. In all standard designs, the cylindrical rollers are guided between rigid ribs by at least one bearing ring. Together with the cage and rollers, this forms a ready-to-fit unit. The other bearing ring can be removed. As a result, the inner ring and outer ring can be mounted separately. Tight fits can thus be achieved on both rings. Bearings of the basic design are manufactured in many different types that differ essentially in the arrangement of the ribs on the inner ring and outer ring. Depending on the design, they are used as non-locating bearings, semi-locating bearings or locating bearings.

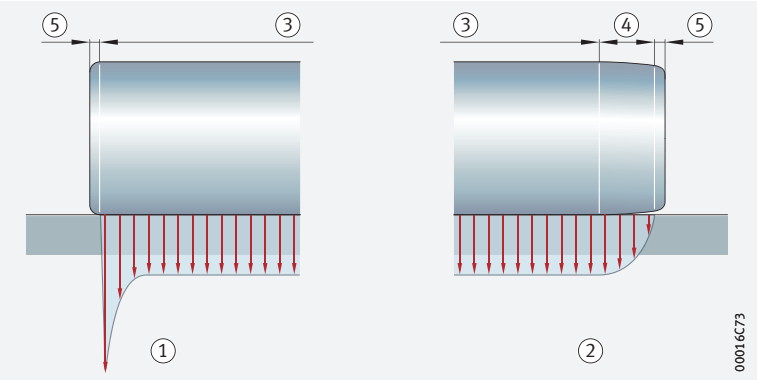

2
Roller profile and stress distribution

1. *Cylindrical roller profile (high stress peaks)*
2. *Roller with profiled ends (no stress peak)*
3. *Cylindrical centre region*
4. *Region of logarithmic tapering*
5. *Rounding of edge*

Type NU

Bearings with non-locating bearing function

In bearings of type NU, the outer ring has two rigid ribs, while the inner ring has no ribs ➤418|3. As a result, axial displacements of the shaft relative to the housing are possible in both directions and within certain limits. During rotational motion, length compensation occurs without constraint in the bearing between the rollers and the raceway without ribs and is therefore practically free from friction. The maximum axial displacement s is given in the product tables. The bearings are used as non-locating bearings, i.e. they cannot guide the shaft axially in either direction ➤421|1.2. For use as semi-locating bearings, they can be combined with the L-section ring HJ ➤419|5.

Type N

Bearings with non-locating bearing function

Cylindrical roller bearings of type N have two rigid ribs on the inner ring, while the outer ring has no ribs ➤418|3. Due to the absence of ribs, axial displacements of the shaft relative to the housing are possible in both directions within the bearing. The maximum axial displacement s is given in the product tables. Bearings of type N are used as non-locating bearings, i.e. they cannot guide the shaft axially in either direction ➤421|1.2.

3
Single row cylindrical roller bearings – non-locating or semi-locating bearings

F_r = *radial load*
F_a = *axial load*

① *Cylindrical roller bearing NU (non-locating bearing)*
② *Cylindrical roller bearing N (non-locating bearing)*
③ *Cylindrical roller bearing NU + L-section ring HJ (semi-locating bearing)*

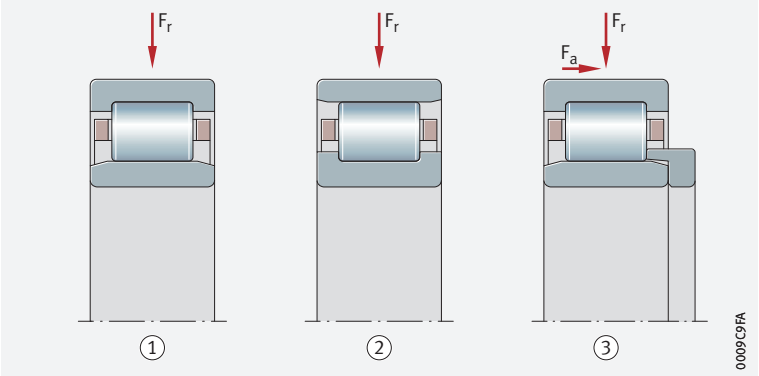

Type NJ

✎ *Bearings with semi-locating bearing function*

Bearings of type NJ have two rigid ribs on the outer ring and one rigid rib on the inner ring ➤*418*|*4*. With these cylindrical roller bearings, axial displacements of the shaft relative to the housing are possible in one direction only. The maximum axial displacement s is given in the product tables. Bearings of type NJ are used as semi-locating bearings, i.e. they can guide the shaft axially in one direction ➤*421*|*1.2*. Semi-locating bearings NJ can be combined with an L-section ring HJ to form a locating bearing unit ➤*419*|*5*.

Type NUP

✎ *Bearings with locating bearing function*

Cylindrical roller bearings of type NUP have two rigid ribs on the outer ring as well as one rigid rib and one loose rib washer on the inner ring ➤*418*|*4*. With these cylindrical roller bearings, axial displacements between the shaft and the housing are not possible. Bearings of type NUP are used as locating bearings, i.e. they can guide the shaft axially in both directions ➤*421*|*1.2*.

4
Single row cylindrical roller bearings – semi-locating or locating bearings

F_r = *radial load*
F_a = *axial load*

① *Cylindrical roller bearing NJ (semi-locating bearing)*
② *Cylindrical roller bearing NUP (locating bearing)*

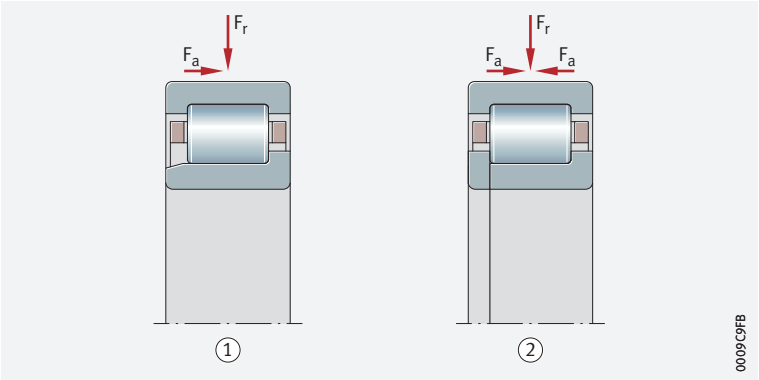

L-section rings

✎ *Functional expansion by means of L-section rings*

In order to expand the function of cylindrical roller bearings NU and NJ, these types can be combined with L-section rings HJ ➤*419*|*5*. In this way, bearings NU can perform a semi-locating bearing function, while bearings NJ in combination with L-section rings can perform a locating bearing function ➤*419*|*5*.

Cylindrical roller bearings NU must not be mounted with two L-section rings, since this can lead to axial bracing of the rollers.

Areas of application of L-section rings

L-section rings can be advantageous where:

- the inner ring in locating bearing arrangements that are subjected to high loads has a very tight fit; bearings of type NJ + HJ permit tighter fits than bearings NUP, which have a shortened inner ring and a loose rib washer
- the shaft must be axially guided in one or both directions and bearings NJ or NUP are not available
- the design of the bearing arrangement and the mounting and dismounting of the bearings should be simplified

Design of L-section rings

The L-section rings are made from rolling bearing steel and are hardened and ground. The axial runout of the lateral faces corresponds to the normal tolerances of the appropriate bearings. Where available, the L-section rings are listed in the product tables together with the associated bearings (e.g. bearing NJ206-E-TVP2 + L-section ring HJ206-E). Since the L-section rings are not a component of the bearing, these must always be ordered together with the bearing ➤430 | 14.

5
Cylindrical roller bearings with L-section rings – semi-locating or locating bearings

F_r = *radial load*
F_a = *axial load*

① *Cylindrical roller bearing NU + L-section ring HJ (semi-locating bearing)*
② *Cylindrical roller bearing NJ + L-section ring HJ (locating bearing)*

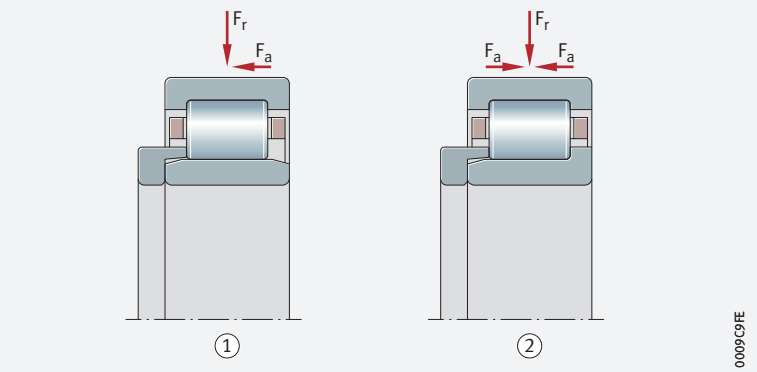

X-life premium quality

Single row cylindrical roller bearings with cage are supplied up to an outside diameter D = 320 mm as X-life bearings ➤419 | 6. These bearings exhibit considerably higher performance than comparable standard cylindrical roller bearings. This is achieved, for example, through the modified internal construction, the optimised contact geometry between the rollers and raceways, the better surface quality ➤420 | 7 and the optimised roller guidance and lubricant film formation.

6
Cylindrical roller bearing in X-life design

① *Brass cage*
② *Cylindrical roller, honed*
③ *Outer ring, honed*
④ *Inner ring, honed*

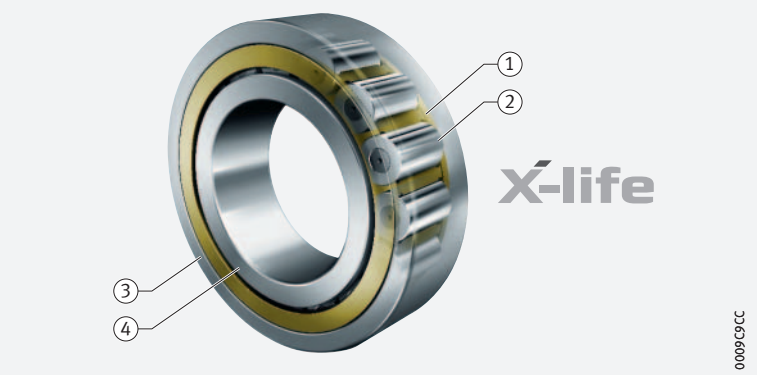

7
Comparison of surface qualities

① *Standard surface – a rough surface causes stress peaks under radial load*
② *X-life surface – a higher surface quality reduces stress peaks; this increases the bearing operating life*

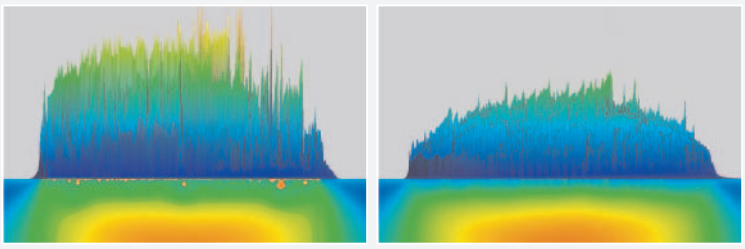

Advantages

Increased customer benefits due to X-life

These technical enhancements offer a range of advantages, such as:

- a more favourable load distribution in the bearing and thus a higher dynamic load carrying capacity of the bearings ➤*417*|*2* and ➤*420*|*8*
- a higher fatigue limit load
- lower heat generation in the bearing
- lower lubricant consumption and therefore longer maintenance intervals if relubrication is carried out
- a measurably longer operating life of the bearings
- high operational security
- compact, environmentally-friendly bearing arrangements

Interchangeable with comparable standard bearings

Since X-life cylindrical roller bearings have the same dimensions as the corresponding standard bearings, the latter can be replaced without any problems by the higher-performance X-life bearings. The major advantages of X-life can therefore also be used for existing bearing arrangements with standard bearings.

Lower operating costs, higher machine availability

In conclusion, these advantages improve the overall cost-efficiency of the bearing position significantly and thus bring about a sustainable increase in the efficiency of the machine and equipment.

Suffix XL

X-life cylindrical roller bearings include the suffix XL in the designation ➤*429*|*1.12* and ➤*438*|▦.

8
Cylindrical roller bearing with cage: comparison of basic dynamic load rating C_r with bearings without X-life quality

C_r = *radial basic dynamic load rating*

① *Bearing without X-life quality*
② *X-life cylindrical roller bearing*

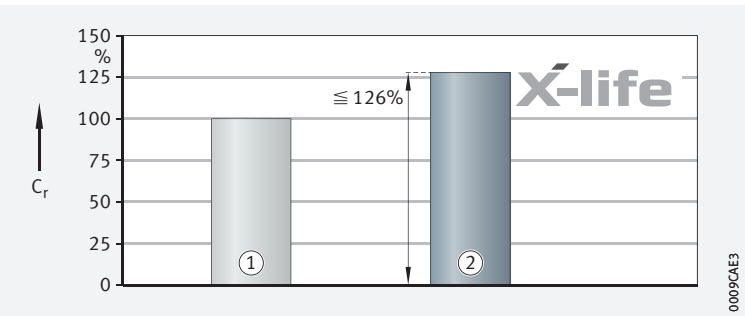

Areas of application

Due to their special technical features, X-life cylindrical roller bearings are highly suitable, for example, for bearing arrangements in:

- heavy industry (steel production)
- power transmission (gearbox engineering)
- processing machines and construction machinery
- wind turbines (gearbox applications)

X-life indicates a high product performance density and thus a particularly significant benefit to the customer. Further information on X-life ➤*10*.

1.2 Load carrying capacity

✎ Designed for very high radial loads

Depending on the type, single row cylindrical roller bearings can support not only very high radial forces but also high axial loads on one or both sides:

- The types N and NU can only support radial loads. If NU bearings are combined with an L-section ring, these can also support axial loads on one side ➤*418*|*3*.
- The type NJ can support axial loads on one side and radial loads. If this type is combined with an L-section ring, it can support axial loads on both sides ➤*419*|*5*.
- The type NUP can support axial loads on both sides and radial loads

✎ Higher capacity roller set in variant E

Bearings with the suffix E have a higher capacity roller set and are thus designed for very high load carrying capacity.

Higher axial load carrying capacity of bearings with toroidal crowned roller end face

✎ Neither wear nor fatigue occurs on the rib contact running and roller end faces

In the case of cylindrical roller bearings with toroidal crowned rollers (TB design), the axial load carrying capacity has been significantly improved with the aid of new calculation and manufacturing methods. A special curvature of the roller end faces facilitates optimum contact conditions between the rollers and ribs ➤*421*|*9*. As a result, the axial contact pressures on the rib are significantly minimised and a lubricant film capable of supporting higher loads is formed. Under standard operating conditions, this completely eliminates wear and fatigue at the rib contact running and roller end faces. In addition, the frictional torque is reduced by up to 50%. The bearing temperature during operation is therefore significantly lower. Bearings of the toroidal crowned design are available for a bore diameter of, or larger than, d = 170 mm ➤*438*.

9

Contact geometry of roller end face/rib face – modified roller end faces

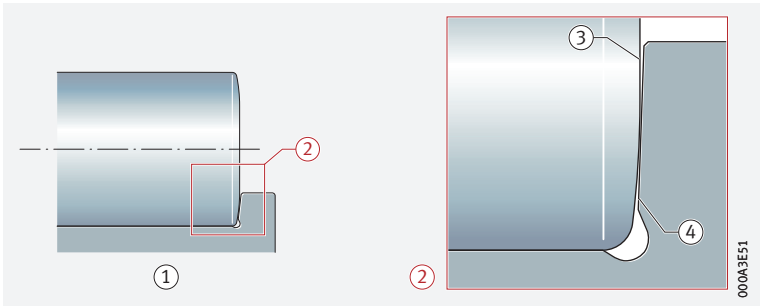

① *Cylindrical roller with inner ring*
② *Detail (representation not to scale)*
③ *End of roller*
④ *Rib*

Load ratio F_a/F_r

Ratio $F_a/F_r \leqq 0,4$ or 0,6

The bearings can support axial loads on one side by means of the ribs on the inner and outer ring. In order to ensure problem-free running (tilting of the rollers is prevented), they must always be subjected to radial load at the same time as axial load. The ratio F_a/F_r must not exceed the value 0,4. For bearings with toroidal crowned roller ends (TB design), values up to 0,6 are permissible.

The load F_r describes the radial load for a single row bearing. For multi-row bearings, F_r must be divided by the number of rows.

Continuous axial loading without simultaneous radial loading is not permissible.

Permissible axial load

Influencing factors on the axial load carrying capacity

Axial loads are supported by the bearing ribs and the roller end faces ➤*418*|*4*. The axial load carrying capacity of the bearing is therefore essentially dependent on:

- the size of the sliding surfaces between the ribs and the end faces of the rolling elements
- the sliding velocity at the ribs
- the lubrication of the contact surfaces
- tilting of the bearing
- friction

10
Force flow under axial load – semi-locating bearing NJ

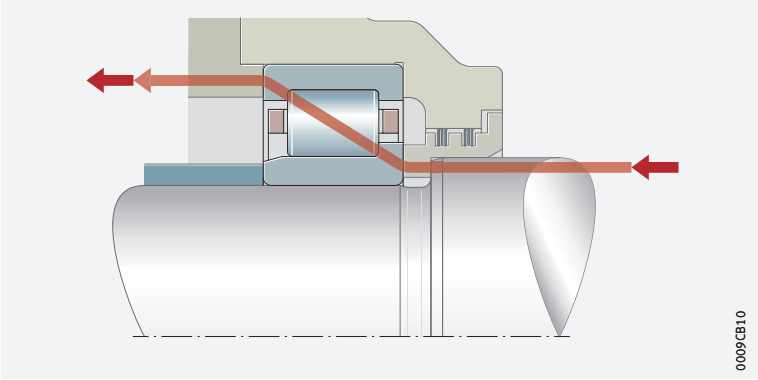

Calculation of permissible axial load – cylindrical rollers with conventional roller ends

Bearings with standard roller ends

The permissible axial load $F_{a\,per}$ can be calculated from the hydrodynamic load carrying capacity of the contact ➤*422*|*1*.

1
Permissible axial load – bearings of standard design

$$F_{a\,per} = k_S \cdot k_B \cdot d_M^{\,1,54} \cdot n^{-0,6} \leqq F_{a\,max}$$

Legend

$F_{a\,per}$	N	Permissible continuous axial load. In order to prevent unacceptably high temperatures in the bearing, $F_{a\,per}$ must not be exceeded
$F_{a\,max}$	N	Maximum continuous axial load in relation to rib fracture. In order to prevent unacceptably high pressures at the contact surfaces, $F_{a\,max}$ must not be exceeded
k_S	–	Factor as a function of lubrication method ➤*423*|*1*. The factor takes into consideration the lubrication method used for the bearing. The better the lubrication and, in particular, the heat dissipation, the higher the permissible axial load
k_B	–	Factor as a function of bearing series ➤*423*|*2*
d_M	mm	Mean bearing diameter $d_M = (D + d)/2$ ➤*438*
n	min^{-1}	Operating speed.

1 *Factor k_S*

Lubrication method	Factor k_S	
	from	to
Minimal heat dissipation, drip feed oil lubrication, oil mist lubrication, low operating viscosity ($\nu < 0{,}5 \cdot \nu_1$)	7,5	10
Poor heat dissipation, oil sump lubrication, oil spray lubrication, low oil flow	10	15
Good heat dissipation, recirculating oil lubrication (pressurised oil lubrication)	12	18
Very good heat dissipation, recirculating oil lubrication with oil cooling, high operating viscosity ($\nu > 2 \cdot \nu_1$)	16	24

The precondition for these k_S values is an operating viscosity of the lubricant of at least the reference viscosity ν_1 in accordance with DIN ISO 281:2010.

Doped lubricating oils should be used, such as CLP (DIN 51517) and HLP (DIN 51524) of ISO VG grades 32 to 460, as well as ATF oils (DIN 51502) and transmission oils (DIN 51512) of SAE viscosity grades 75W to 140W.

2 *Bearing factor k_B*

Series	Factor k_B
NJ2..-E, NJ22..-E, NUP2..-E, NUP22..-E	15
NJ3..-E, NJ23..-E, NUP3..-E, NUP23..-E	20
NJ4	22

Calculation of permissible axial load – cylindrical rollers with toroidal roller ends

Higher axial loads possible

For bearings with toroidal roller ends, the permissible axial loads are 50% higher ➤*423*| *2*.

f2 *Permissible axial load – bearings of TB design*

$$F_{a\,per} = 1{,}5 \cdot k_S \cdot k_B \cdot d_M^{\,1{,}54} \cdot n^{-0{,}6} \leqq F_{a\,max}$$

Calculation of maximum permissible axial load

For bearings with rollers of the standard or TB design, the maximum permissible axial load $F_{a\,max}$ ➤*423*| *3* is calculated from the rib strength and the security against wear. This must not be exceeded, even if $F_{a\,per}$ gives higher values ➤*423*| *4*.

f3 *Maximum axial load – bearings of standard and TB design*

$$F_{a\,max} = 0{,}075 \cdot k_B \cdot d_M^{\,2{,}1}$$

f4 *Permissible axial load*

$$F_{a\,per} \leqq F_{a\,max}$$

Axial load under shaft deflection

Permissible axial load under shaft deflection of up to 2′

Under considerable shaft deflection, the shaft shoulder presses against the inner ring rib. In combination with the active axial load, this can lead to high alternating loading of the inner ring ribs. Under a shaft deflection of up to 2′, the permissible axial load can be estimated ➤*423*| *5*.

If more severe tilting is present, a separate strength analysis is required. In this case, please contact Schaeffler.

f5 *Axial load under misalignment*

$$F_{as} = 20 \cdot d_M^{\,1{,}42}$$

Legend

F_{as}	N	Permissible axial load under misalignment.

1.3 Compensation of angular misalignments

Angular deviations are misalignments between the inner and outer ring

The possible misalignment between the inner ring and outer ring is influenced by the internal bearing construction, the operating clearance, the forces acting on the bearing etc. Due to these complex relationships, it is not possible to give generally valid absolute values here. However, misalignments (angular deviations) between the inner ring and outer ring will generally always have an effect on the running noise and the operating life of the bearings.

Permissible tilting

The permissible guide values at which, based on experience, there is no significant reduction in operating life are as follows:

- 4′ for series 10, 19, 2, 3, 4
- 3′ for series 22, 23

Scope of values

The values apply to:

- bearing arrangements with static misalignment (consistent position of the shaft and housing axis)
- bearings that are not required to perform an axial guidance function
- bearings subjected to small loads (with $C_{0r}/P \geqq 5$)

Checking by means of the calculation program BEARINX is recommended in all cases. If there is any uncertainty regarding possible misalignment, please consult Schaeffler.

1.4 Lubrication

Oil or grease lubrication

Single row cylindrical roller bearings with cage are not greased. They must be lubricated with oil or grease.

Compatibility with plastic cages

When using bearings with plastic cages, compatibility between the lubricant and the cage material must be ensured if synthetic oils, lubricating greases with a synthetic oil base or lubricants containing a high proportion of EP additives are used.

If there is any uncertainty regarding the suitability of the selected lubricant for the application, please consult Schaeffler or the lubricant manufacturer.

Observe oil change intervals

Aged oil and additives in the oil can impair the operating life of plastics at high temperatures. As a result, stipulated oil change intervals must be strictly observed.

1.5 Sealing

Provide seals in the adjacent construction

The bearings are not sealed; i. e. sealing of the bearing position must be carried out in the adjacent construction. This must reliably prevent:

- moisture and contaminants from entering the bearing
- the egress of lubricant from the bearing

1.6 Speeds

Speeds in the product tables

The product tables generally give two speeds for the bearings:

- the kinematic limiting speed n_G
- the thermal speed rating $n_{\vartheta r}$

Limiting speeds

The limiting speed n_G is the kinematically permissible speed of the bearing. Even under favourable mounting and operating conditions, this value should not be exceeded without prior consultation with Schaeffler ➤64.

Bearings with solid brass cages have a significantly higher limiting speed for oil lubrication.

✎ *Values for grease lubrication*

For the grease lubrication of bearings without seals or shields, 85% of the value stated in the product tables is permissible in each case.

For the grease lubrication of bearings with solid brass cages, 65% of the value stated in the product tables is permissible in each case.

Reference speeds

✎ *$n_{\vartheta r}$ is used to calculate n_{ϑ}*

The thermal speed rating $n_{\vartheta r}$ is not an application-oriented speed limit, but is a calculated ancillary value for determining the thermally safe operating speed n_{ϑ} ➤*64*.

1.7 Noise

The Schaeffler Noise Index (SGI) has been developed as a new feature for comparing the noise level of different bearing types and series. As a result, a noise evaluation of rolling bearings can now be carried out for the first time.

Schaeffler Noise Index

The SGI value is based on the maximum permissible noise level of a bearing in accordance with internal standards, which is calculated on the basis of ISO 15242. In order that different bearing types and series can be compared, the SGI value is plotted against the basic static load rating C_0.

This permits direct comparisons between bearings with the same load carrying capacity. The upper limit value is given in each of the diagrams. This means that the average noise level of the bearings is lower than illustrated in the diagram.

The Schaeffler Noise Index is an additional performance characteristic in the selection of bearings for noise-sensitive applications. The specific suitability of a bearing for an application in terms of installation space, load carrying capacity or speed limit for example, must be checked independently of this.

The Noise Index is currently available for the main series. Additional series will be updated and introduced in subsequent publications.

Further information:

- ***medias*** *https://medias.schaeffler.com*

11
Schaeffler Noise Index for single row cylindrical roller bearings with cage

SGI = *Schaeffler Noise Index*
C_0 = *basic static load rating*

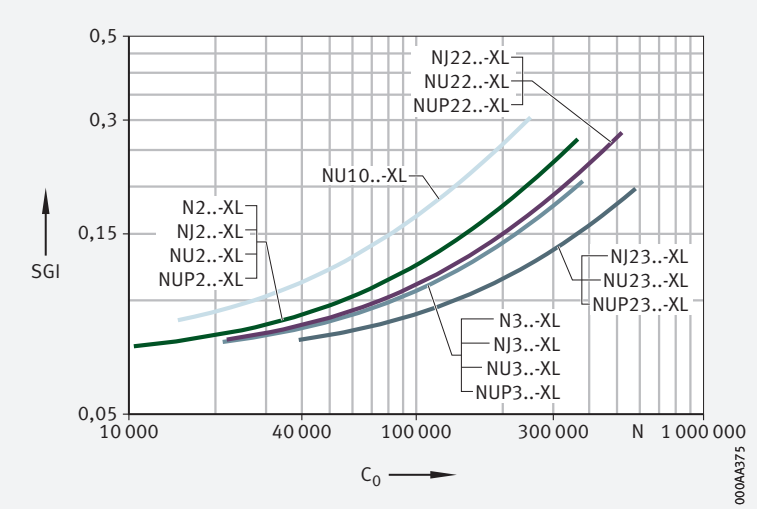

1.8 Temperature range

✎ *Limiting values*

The operating temperature of the bearings is limited by:

- the dimensional stability of the bearing rings and cylindrical rollers
- the cage
- the lubricant

Possible operating temperatures of single row cylindrical roller bearings ➤*426*|▦*3*.

▦*3*
Permissible temperature ranges

Operating temperature	Single row cylindrical roller bearings	
	with polyamide cage PA66	with brass or sheet steel cage
	–30 °C to +120 °C	–30 °C to +150 °C For continuous operating temperatures higher than +120 °C, please contact us

In the event of anticipated temperatures which lie outside the stated values, please contact Schaeffler.

1.9 Cages

The right cage for any purpose

✎ *Standard materials are plastic, brass and steel*

Approximately two-thirds of Schaeffler cylindrical roller bearings are supplied with cages. For standard applications, the cage materials used essentially are plastic, brass and sheet steel. A large number of cage types and sizes are designed using these three materials. As a result, the right bearing – in accordance with the operating conditions – is always available. For cylindrical roller bearings standardised in accordance with DIN 5412, there are four standard cages available for selection. A summary of the various cage characteristics and their suitability for certain applications is shown in ➤*427*|▦*4*.

✎ *Plastic cage TVP2*

The highly versatile plastic cage TVP2 is the standard cage for bearings up to a medium bearing diameter ➤*427*|▦*5*. In comparison with metal cages, it has a range of advantages: low mass, low running noises due to good damping, high elasticity, good tribological characteristics with steel rolling elements and very good emergency running characteristics. This cage is thus a good choice for applications that allow the use of a plastic cage. Due to their wide-ranging positive characteristics, such plastic cages are now in use in many millions of bearings and applications.

✎ *Two-piece solid brass cage M1*

A classic design of brass cage is the two-piece, riveted-bar brass cage M1 ➤*427*|▦*5*. It comprises a so-called comb cage and a cage cover. The cage parts are joined by means of hot riveting, where the rivet pin is integrated in the cage comb.

✎ *One-piece, milled brass cage MPAX/MPBX*

The brass cage MPAX or MPBX is intended for demanding conditions, such as the high speeds and radial accelerations occurring in planetary gear bearing arrangements ➤*427*|▦*4*. The optimised pocket geometry and the minimised mass allow a lower running temperature than comparable brass cages. The cages differ in the type of rib guidance. Cage MPAX is guided on the outer ring rib and cage MPBX is guided on the inner ring rib.

✎ Sheet steel cage JP3

For applications that require increased temperature resistance, good lubrication and high geometrical stability of the cage, a bearing with a sheet steel cage is often the most economical solution ➤427| 4. With the aid of highly developed manufacturing technologies, the geometry of the crosspieces and thus the running contact of the rollers on the cage bars is significantly improved. This goes hand in hand with a favourable surface structure, which has a positive influence on lubricant film formation.

4 *Cage, cage characteristics, suitability*

+++ = *extremely suitable*
\+ = *suitable*
– = *less suitable*

Criteria	Cage				
	TVP2	M1	JP3	MPAX	MPBX
	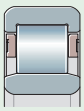	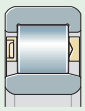	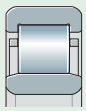	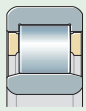	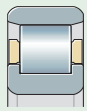
Large number of rolling elements	+	+	+	+	+
High radial cage rigidity	–	+++	+	+++	+++
Low mass	+++	–	+	–	–
Good emergency running (damage case)	–	+++	+	+++	+++
Low noise	+++	+	+	+	+
High guidance normal acceleration	+	+	+	+++	+++
Strong vibrations	+	+	+	+++	+++
Relubrication facility	–	–	+++	+	+
Grease/oil compatibility	–	+	+++	+	+
Application temperatures > 120 °C	–	+	+++	+	+
Large temperature fluctuations	–	+	+++	+	+

✎ Solid cages made from brass and polyamide PA66 are used as standard

Standard cages are shown in ➤427| 5. The cage design is dependent on the bearing series and the bore code. Other cage designs are available by agreement. With such cages, however, suitability for high speeds and temperatures as well as the basic load ratings may differ from the values for the bearings with standard cages.

For high continuous temperatures and applications with difficult operating conditions, bearings with brass cages should be used. If there is any uncertainty regarding cage suitability, please consult Schaeffler.

5 *Cage, cage suffix, bore code*

Bearing series	Solid cage made from polyamide PA66	Solid brass cage
	TVP2	M1
	standard	standard
	Bore code	
NU10	–	from 05
NU19	–	from 92
NU2..-E, NJ2..-E, NUP2..-E	up to 26	from 28
NU3..-E, NJ3..-E, NUP3..-E	up to 28	from 30
NU4, NJ4	–	all
NU22..-E, NJ22..-E	up to 26	from 28
NU23..-E, NJ23..-E	up to 22	from 24
N2..-E	up to 20, 22 to 26	21, from 28
N3..-E	up to 16	from 17
NUP22..-E	up to 26	from 28
NUP23..-E	up to 22	from 24

1.10 Internal clearance

Radial internal clearance

The standard is CN

Cylindrical roller bearings with cage are manufactured as standard with the radial internal clearance CN (normal) ➤*428*|▦*6*. CN is not stated in the designation.

Certain sizes are also available by agreement with the larger internal clearance C3, C4 and C5 ➤*428*|▦*6*.

The values for radial internal clearance correspond to DIN 620-4:2004 (ISO 5753-1:2009) ➤*428*|▦*6*. They are valid for bearings which are free from load and measurement forces (without elastic deformation).

▦*6*
Radial internal clearance of single row cylindrical roller bearings with cage

Nominal bore diameter d mm		Radial internal clearance							
		CN (Group N) µm		C3 (Group 3) µm		C4 (Group 4) µm		C5 (Group 5) µm	
over	incl.	min.	max.	min.	max.	min.	max.	min.	max.
–	24	20	45	35	60	50	75	65	90
24	30	20	45	35	60	50	75	70	95
30	40	25	50	45	70	60	85	80	105
40	50	30	60	50	80	70	100	98	125
50	65	40	70	60	90	80	110	110	140
65	80	40	75	65	100	90	125	130	165
80	100	50	85	75	110	105	140	155	190
100	120	50	90	85	125	125	165	180	220
120	140	60	105	100	145	145	190	200	245
140	160	70	120	115	165	165	215	225	275
160	180	75	125	120	170	170	220	250	300
180	200	90	145	140	195	195	250	275	330
200	225	105	165	160	220	220	280	305	365
225	250	110	175	170	235	235	300	330	395
250	280	125	195	190	260	260	330	370	440
280	315	130	205	200	275	275	350	410	485
315	355	145	225	225	305	305	385	455	535
355	400	190	280	280	370	370	460	510	600
400	450	210	310	310	410	410	510	565	665
450	500	220	330	330	440	440	550	625	735
500	560	240	360	360	480	480	600	690	810
560	630	260	380	380	500	500	620	780	900
630	710	285	425	425	565	565	705	865	1005

1.11 Dimensions, tolerances

Dimension standards

The main dimensions of cylindrical roller bearings correspond to ISO 15:2017 (DIN 616:2000 and DIN 5412-1:2005).

The main dimensions of L-section rings HJ correspond to ISO 246:1995 (DIN 5412-1:2005).

Chamfer dimensions

The limiting dimensions for chamfer dimensions correspond to DIN 620-6:2004. Overview and limiting values ➤*137|7.11*. Nominal value of chamfer dimension ➤*438|*.

Tolerances

The dimensional tolerances of cylindrical roller bearings correspond to the tolerance class Normal, the running tolerance to the tolerance class 6 in accordance with ISO 492:2014. Tolerance values in accordance with ISO 492 ➤*126|*.

1.12 Suffixes

Suffixes describe the design and features of a bearing in more detail.

7 Suffixes and corresponding descriptions

Suffix	Description of suffix	
C3	Radial internal clearance C3 (larger than normal)	Available by agreement
C4	Radial internal clearance C4 (larger than C3)	
C5	Radial internal clearance C5 (larger than C4)	
E	Increased capacity design	Standard
EX	Increased capacity design, design modified in accordance with standard (parts from these bearings must not be interchanged with parts from bearings of the same size of the previous design E)	
JP3	Sheet steel window cage, single-piece, roller-guided	Available by agreement
J30P	Black oxide coated (Durotect B)	
MPAX	Solid brass cage, single-piece, rib-guided on outer ring	
MPBX	Solid brass cage, single-piece, rib-guided on inner ring	
M1	Solid brass cage, two-piece, roller-guided	Standard
M1A	Solid brass cage, two-piece, rib-guided on outer ring	Available by agreement
M1B	Solid brass cage, two-piece, rib-guided on inner ring	
TB	Bearing with increased axial load carrying capacity (toroidal crowned design)	Standard, dependent on bearing size
TVP2	Solid window cage made from glass fibre reinforced polyamide PA66	Standard
XL	X-life bearing	

1.13 Structure of bearing designation

With ***medias*** interchange, equivalent Schaeffler bearing designations can be determined for bearing designations from other rolling bearing manufacturers *https://www.schaeffler.de/std/1B69*.

✎ *Examples of composition of bearing designation*

The designation of bearings follows a set model. Examples ➤ *430* | *12* to ➤ *430* | *14*. The composition of designations is subject to DIN 623-1 ➤ *102* | *10*.

12
Single row cylindrical roller bearing with cage – bearing with non-locating bearing function: designation structure

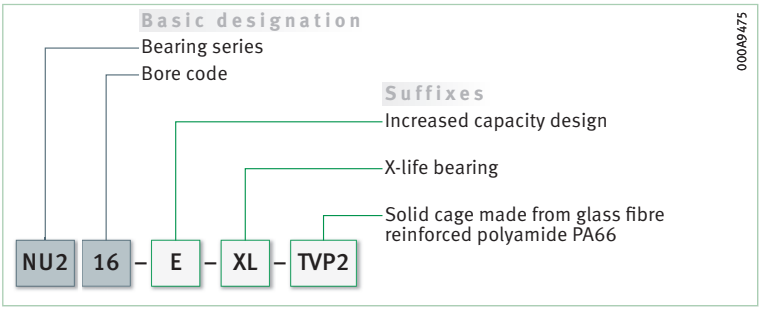

13
Single row cylindrical roller bearing with cage – bearing with semi-locating bearing function: designation structure

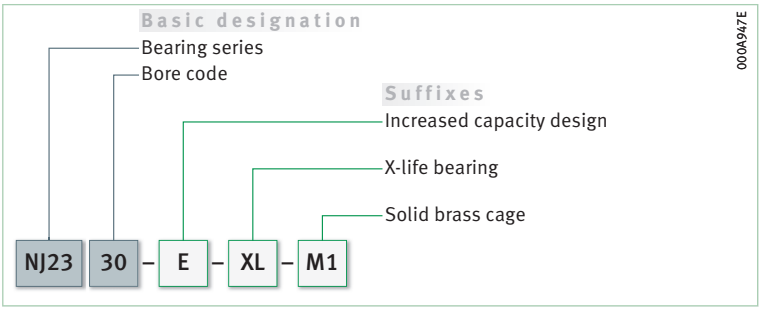

14
Single row cylindrical roller bearing with cage, type NJ with L-section ring – bearing with locating bearing function: designation structure

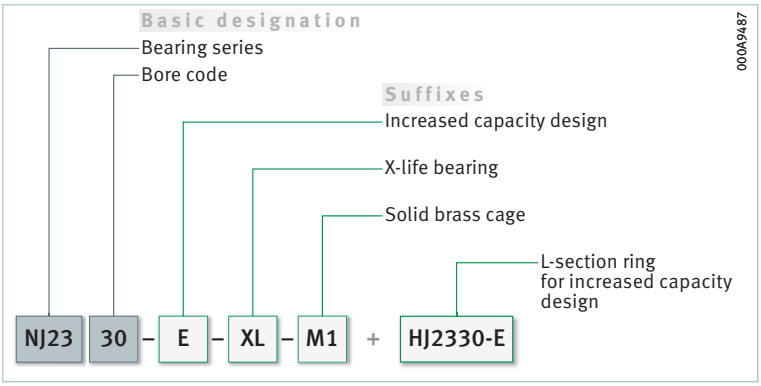

1.14 Dimensioning

Equivalent dynamic bearing load

✎ *$P = F_r$ under purely radial load of constant magnitude and direction*

The basic rating life equation $L = (C_r/P)^p$ used in the dimensioning of bearings under dynamic load assumes a load of constant magnitude and direction. In radial bearings, this is a purely radial load F_r. If this condition is met, the bearing load F_r is used in the rating life equation for P ($P = F_r$).

Cylindrical roller bearings with non-locating bearing function

✎ *$P = F_r$*

Non-locating bearings can only support radial loads. For these bearings ➤ *430* | *f 6*.

f 6
Equivalent dynamic load

$P = F_r$

Cylindrical roller bearings with semi-locating or locating bearing function

✎ P is a substitute force for combined load and various load cases

If the condition described above is not met, i. e. if, in addition to the radial force F_r, there is also an axial force F_a, a constant radial force must first be determined for the rating life calculation that (in relation to the rating life) represents an equivalent load. This force is known as the equivalent dynamic bearing load P.

✎ $F_a/F_r \leqq e$ or $F_a/F_r > e$

The calculation of P is dependent on the load ratio F_a/F_r and the calculation factors e and Y ➤ *431* | *f 7* and ➤ *431* | *f 8*.

f 7
Equivalent dynamic load

$$\frac{F_a}{F_r} \leqq e \quad \Rightarrow \quad P = F_r$$

f 8
Equivalent dynamic load

$$\frac{F_a}{F_r} > e \quad \Rightarrow \quad P = 0{,}92 \cdot F_r + Y \cdot F_a$$

Legend

P	N	Equivalent dynamic bearing load
F_r	N	Radial load
F_a	N	Axial load
e, Y	–	Factors ➤ *431*	*8*.

8
Factors e and Y

Bearing series	Calculation factors	
	e	Y
NJ2, NUP2, NJ3, NUP3, NJ4	0,2	0,6
NJ22, NUP22, NJ23, NUP23	0,3	0,4

Equivalent static bearing load

✎ $P_0 = F_{0r}$

For cylindrical roller bearings subjected to static load ➤ *431* | *f 9*.

f 9
Equivalent static load

$$P_0 = F_{0r}$$

Legend

P_0	N	Equivalent static bearing load
F_{0r}	N	Largest radial load present (maximum load).

Static load safety factor

✎ $S_0 = C_0/P_0$

In addition to the basic rating life L (L_{10h}), it is also always necessary to check the static load safety factor S_0 ➤ *431* | *f 10*.

f 10
Static load safety factor

$$S_0 = \frac{C_0}{P_0}$$

Legend

S_0	–	Static load safety factor
C_0	N	Basic static load rating
P_0	N	Equivalent static bearing load.

1.15 Minimum load

✎ In order to prevent damage due to slippage, a minimum radial load of $P > C_{0r}/60$ is necessary during continuous operation

In order that no slippage occurs between the contact partners, the cylindrical roller bearings must be constantly subjected to a sufficiently high radial load. For continuous operation, experience shows that a minimum radial load of the order of $P > C_{0r}/60$ is thus necessary. In most cases, however, the radial load is already higher than the requisite minimum load due to the weight of the supported parts and the external forces.

If the minimum radial load is lower than indicated above, please consult Schaeffler.

1.16 Design of bearing arrangements

Support bearing rings over their entire circumference and width

In order to allow full utilisation of the load carrying capacity of the bearings and achieve the requisite rating life, the bearing rings must be rigidly and uniformly supported by means of contact surfaces over their entire circumference and over the entire width of the raceway. Support can be provided by means of a cylindrical seating surface. The seating and contact surfaces should not be interrupted by grooves, holes or other recesses. The accuracy of mating parts must meet specific requirements ➤433|▦9 to ➤434|▦11.

Radial location

For secure radial location, tight fits are necessary

In addition to supporting the rings adequately, the bearings must also be securely located in a radial direction, to prevent creep of the bearing rings on the mating parts under load. This is generally achieved by means of tight fits between the bearing rings and the mating parts. If the rings are not secured adequately or correctly, this can cause severe damage to the bearings and adjacent machine parts. Influencing factors, such as the conditions of rotation, magnitude of the load, internal clearance, temperature conditions, design of the mating parts and the mounting and dismounting options must be taken into consideration in the selection of fits.

If shock type loads occur, tight fits (transition fit or interference fit) are required to prevent the rings from coming loose at any point. Clearance, transition or interference fits ➤152|▦6 and ➤160|▦7.

The following information provided in Technical principles must be taken into consideration in the design of bearing arrangements:

- criteria for selection of fits ➤146
- conditions of rotation ➤147
- tolerance classes for cylindrical shaft seats (radial bearings) ➤149|▦2
- shaft fits ➤152|▦6
- tolerance classes for bearing seats in housings (radial bearings) ➤150|▦4
- housing fits ➤160|▦7

Axial location

The bearings must also be securely located in an axial direction

As a tight fit alone is not normally sufficient to also locate the bearing rings securely on the shaft and in the housing bore in an axial direction, this must usually be achieved by means of an additional axial location or retention method. The axial location of the bearing rings must be matched to the type of bearing arrangement. Shaft and housing shoulders, housing covers, nuts, spacer rings, retaining rings, adapter and withdrawal sleeves etc., are fundamentally suitable ➤434|🗀15.

Dimensional, geometrical and running accuracy of cylindrical seats

A minimum of IT6 should be provided for the shaft seat and a minimum of IT7 for the housing seat

The accuracy of the cylindrical bearing seat on the shaft and in the housing should correspond to the accuracy of the bearing used. For cylindrical roller bearings with the tolerance class Normal, the shaft seat should correspond to a minimum of standard tolerance grade IT6 and in the housing seat to a minimum of IT7; with tolerance class 6, the shaft seat should correspond to a minimum of IT5 and the housing seat to a minimum of IT6. Guide values for the geometrical and positional tolerances of the bearing seating surfaces ➤433|▦9. Tolerances t_1 to t_3 in accordance with ➤170|🗀11. Numerical values for IT grades ➤433|▦10.

9 *Guide values for the geometrical and positional tolerances of bearing seating surfaces*

Bearing tolerance class		Bearing seating surface	Standard tolerance grades to ISO 286-1 (IT grades)			
to ISO 492	to DIN 620		Diameter tolerance	Roundness tolerance	Parallelism tolerance	Total axial runout tolerance of abutment shoulder
				t_1	t_2	t_3
Normal	PN (P0)	Shaft	IT6 (IT5)	Circumferential load IT4/2	Circumferential load IT4/2	IT4
				Point load IT5/2	Point load IT5/2	
		Housing	IT7 (IT6)	Circumferential load IT5/2	Circumferential load IT5/2	IT5
				Point load IT6/2	Point load IT6/2	
6	P6	Shaft	IT5	Circumferential load IT3/2	Circumferential load IT3/2	IT3
				Point load IT4/2	Point load IT4/2	
		Housing	IT6	Circumferential load IT4/2	Circumferential load IT4/2	IT4
				Point load IT5/2	Point load IT5/2	

10 *Numerical values for ISO standard tolerances (IT grades) to ISO 286-1:2010*

IT grade	Nominal dimension in mm					
	over **10**	**18**	**30**	**50**	**80**	**120**
	incl. **18**	**30**	**50**	**80**	**120**	**180**
	Values in µm					
IT3	3	4	4	5	6	8
IT4	5	6	7	8	10	12
IT5	8	9	11	13	15	18
IT6	11	13	16	19	22	25
IT7	18	21	25	30	35	40

continued ▼

10 *Numerical values for ISO standard tolerances (IT grades) to ISO 286-1:2010*

IT grade	Nominal dimension in mm					
	over **180**	**250**	**315**	**400**	**500**	**630**
	incl. **250**	**315**	**400**	**500**	**630**	**800**
	Values in µm					
IT3	10	12	13	15	16	18
IT4	14	16	18	20	22	25
IT5	20	23	25	27	32	36
IT6	29	32	36	40	44	50
IT7	46	52	57	63	70	80

continued ▲

Roughness of cylindrical bearing seating surfaces

Ra must not be too high

The roughness of the bearing seats must be matched to the tolerance class of the bearings. The mean roughness value Ra must not be too high, in order to maintain the interference loss within limits. The shafts must be ground, while the bores must be precision turned. Guide values as a function of the IT grade of bearing seating surfaces ➤434|▦ 11.

▦ 11
Roughness values for cylindrical bearing seating surfaces – guide values

Nominal diameter of the bearing seat d (D) mm		Recommended mean roughness value for ground bearing seats Ramax µm			
		Diameter tolerance (IT grade)			
over	incl.	IT7	IT6	IT5	IT4
–	80	1,6	0,8	0,4	0,2
80	500	1,6	1,6	0,8	0,4
500	1 250	3,2[1)]	1,6	1,6	0,8

1) *For the mounting of bearings using the hydraulic method, a value Ra = 1,6 µm must not be exceeded.*

Mounting dimensions for the contact surfaces of bearing rings

The contact surfaces for the rings must be of sufficient height

The mounting dimensions of the shaft and housing shoulders, and spacer rings etc., must ensure that the contact surfaces for the bearing rings are of sufficient height. The transition from the bearing seat to the abutment shoulder must be designed with rounding to DIN 5418:1993 or an undercut to DIN 509:2006. Proven mounting dimensions for the radii and diameters of abutment shoulders are given in the product tables ➤434|⧉ 15 and ➤438|▦. These dimensions are limiting dimensions (maximum or minimum dimensions); the actual values should not be higher or lower than specified.

Rib support in axially loaded bearings

Ribs under axial load must be supported over their entire height and entire circumference. The size and axial runout accuracy of the contact surfaces on the inner ring rib must be observed especially in the case of cylindrical roller bearings subjected to high loads, since these factors also influence the uniformity of the rib load and the running accuracy of the shaft. This means that the ribs may be subjected to damaging alternating stresses even in the case of very small misalignments. If the mounting dimensions indicated in the product tables are observed, the problems described can be reliably avoided ➤438|▦.

Support in semi-locating bearings

In semi-locating bearings, it is sufficient to support the bearing rings on one side, on the rib supporting the axial load ➤434|⧉ 15.

⧉ 15
Support of the inner ring rib – type NJ (semi-locating bearing)

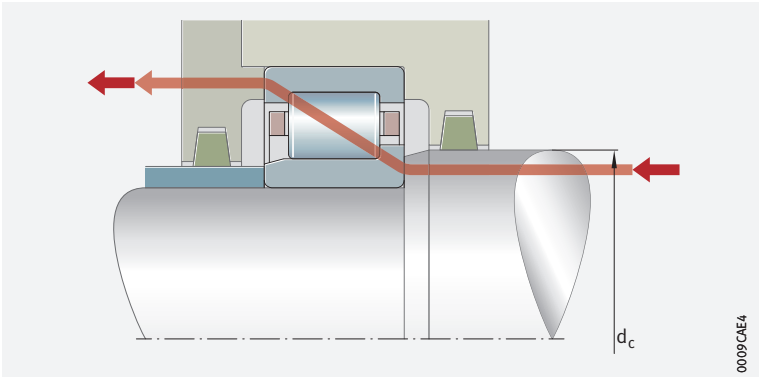

d_c = *recommended height of shaft shoulder with axially loaded rib*
Arrow = *force flow*

1.17 Mounting and dismounting

The mounting and dismounting options for cylindrical roller bearings, by thermal, hydraulic or mechanical methods, must be taken into consideration in the design of the bearing position.

Since one bearing ring can be removed, the bearings are easy to mount.

Together with the cage and rollers, the bearing ring with the two rigid ribs forms a ready-to-mount unit. The other bearing ring can be removed. As a result, the bearing parts can be mounted separately from each other ➤*416|1.1*. This gives simplified mounting of the bearings, especially when the two bearing rings have a tight fit.

Schaeffler Mounting Handbook

Rolling bearings must be handled with great care

Rolling bearings are well-proven precision machine elements for the design of economical and reliable bearing arrangements, which offer high operational security. In order that these products can function correctly and achieve the envisaged operating life without detrimental effect, they must be handled with care.

The Schaeffler Mounting Handbook MH 1 gives comprehensive information about the correct storage, mounting, dismounting and maintenance of rotary rolling bearings *https://www.schaeffler.de/std/1D53*. It also provides information which should be observed by the designer, in relation to the mounting, dismounting and maintenance of bearings, in the original design of the bearing position. This book is available from Schaeffler on request.

1.18 Legal notice regarding data freshness

The further development of products may also result in technical changes to catalogue products

Of central interest to Schaeffler is the further development and optimisation of its products and the satisfaction of its customers. In order that you, as the customer, can keep yourself optimally informed about the progress that is being made here and with regard to the current technical status of the products, we publish any product changes which differ from the printed version in our electronic product catalogue.

We therefore reserve the right to make changes to the data and illustrations in this catalogue. This catalogue reflects the status at the time of printing. More recent publications released by us (as printed or digital media) will automatically precede this catalogue if they involve the same subject. Therefore, please always use our electronic product catalogue to check whether more up-to-date information or modification notices exist for your desired product.

Link to electronic product catalogue

The following link will take you to the Schaeffler electronic product catalogue: *https://medias.schaeffler.com*.

1.19 Further information

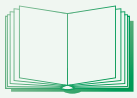

In addition to the data in this chapter, the following chapters in Technical principles must also be observed in the design of bearing arrangements:

- Determining the bearing size ➤*34*
- Rigidity ➤*54*
- Friction and increases in temperature ➤*56*
- Speeds ➤*64*
- Bearing data ➤*97*
- Lubrication ➤*70*
- Sealing ➤*185*
- Design of bearing arrangements ➤*141*
- Mounting and dismounting ➤*194*



Cylindrical roller bearings with cage

Non-locating bearings

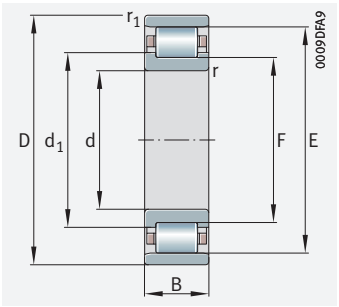

N

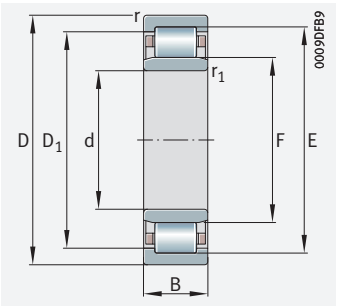

NU

d = 15 – 35 mm

Main dimensions			Basic load ratings		Fatigue limit load	Limiting speed	Speed rating	Mass	Designation
d	D	B	dyn. C_r	stat. C_{0r}	C_{ur}	n_G	$n_{\vartheta r}$	m	➤*429*|*1.12* ➤*430*|*1.13* X-life ➤*419*
			N	N	N	min^{-1}	min^{-1}	≈ kg	
15	35	11	15 100	10 400	1 640	27 000	17 900	0,047	**N202-E-XL-TVP2**
	35	11	15 100	10 400	1 440	27 000	17 900	0,048	**NU202-E-XL-TVP2**
17	40	12	20 800	14 600	2 230	22 900	15 300	0,068	**N203-E-XL-TVP2**
	40	12	20 800	14 600	1 910	22 900	15 300	0,069	**NU203-E-XL-TVP2**
	40	16	28 500	21 900	3 550	22 900	13 200	0,051	**NU2203-E-XL-TVP2**
	47	14	30 000	21 200	2 700	19 600	13 500	0,121	**NU303-E-XL-TVP2**
20	47	14	32 500	24 700	3 950	19 200	12 800	0,112	**N204-E-XL-TVP2**
	47	14	32 500	24 700	3 000	19 200	12 800	0,114	**NU204-E-XL-TVP2**
	47	18	38 500	31 000	5 200	19 200	11 100	0,146	**NU2204-E-XL-TVP2**
	52	15	37 500	27 000	3 150	17 200	11 900	0,153	**NU304-E-XL-TVP2**
	52	21	49 500	39 000	6 300	17 200	9 700	0,215	**NU2304-E-XL-TVP2**
25	47	12	18 500	14 800	1 820	26 000	12 900	0,092	**NU1005-XL-M1**
	52	15	34 500	27 500	4 450	17 200	11 600	0,135	**N205-E-XL-TVP2**
	52	15	34 500	27 500	3 400	17 200	11 600	0,137	**NU205-E-XL-TVP2**
	52	18	41 500	34 500	5 800	17 200	9 600	0,165	**NU2205-E-XL-TVP2**
	62	17	49 000	37 500	5 700	14 400	10 100	0,242	**N305-E-XL-TVP2**
	62	17	49 000	37 500	4 550	14 400	10 100	0,245	**NU305-E-XL-TVP2**
	62	24	67 000	56 000	9 300	14 400	8 200	0,349	**NU2305-E-XL-TVP2**
30	55	13	22 900	19 300	2 470	22 400	11 000	0,134	**NU1006-XL-M1**
	62	16	46 000	37 500	5 500	14 200	9 600	0,205	**N206-E-XL-TVP2**
	62	16	46 000	37 500	4 450	14 200	9 600	0,207	**NU206-E-XL-TVP2**
	62	20	58 000	50 000	8 000	14 200	8 000	0,255	**NU2206-E-XL-TVP2**
	72	19	61 000	48 000	7 900	12 400	8 900	0,366	**N306-E-XL-TVP2**
	72	19	61 000	48 000	6 200	12 400	8 900	0,368	**NU306-E-XL-TVP2**
	72	27	86 000	75 000	13 400	12 400	7 200	0,529	**NU2306-E-XL-TVP2**
	90	23	84 000	65 000	8 500	13 400	8 100	0,858	**NU406-XL-M1**
35	62	14	29 000	26 000	3 250	19 700	9 700	0,177	**NU1007-XL-M1**
	72	17	59 000	50 000	7 800	12 300	8 100	0,301	**N207-E-XL-TVP2**
	72	17	59 000	50 000	6 300	12 300	8 100	0,303	**NU207-E-XL-TVP2**
	72	23	73 000	65 000	10 700	12 300	7 200	0,406	**NU2207-E-XL-TVP2**
	80	21	76 000	63 000	10 800	10 900	7 900	0,486	**N307-E-XL-TVP2**
	80	21	76 000	63 000	8 300	10 900	7 900	0,486	**NU307-E-XL-TVP2**
	80	31	108 000	98 000	17 900	10 900	6 600	0,723	**NU2307-E-XL-TVP2**
	100	25	103 000	83 000	10 900	11 800	7 000	1,14	**NU407-XL-M1**

medias *https://www.schaeffler.de/std/1F9A*

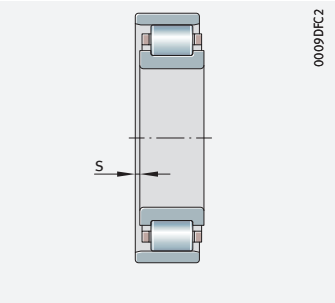

Axial displacement "s"
for N and NU

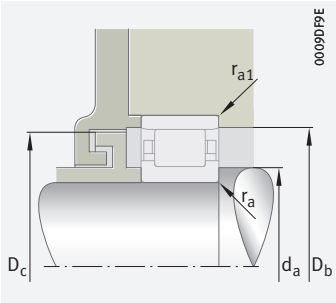

Mounting dimensions
for N

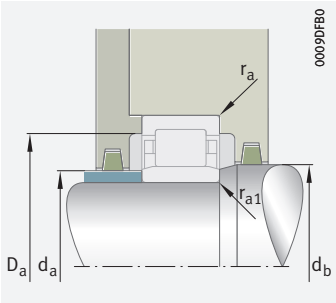

Mounting dimensions
for NU

Dimensions								Mounting dimensions							
d	r	r_1	s	E	F	D_1	d_1	d_a		d_b	D_a	D_b	D_c	r_a	r_{a1}
	min.	min.				≈	≈	min.	max.	min.	max.	min.	max.	max.	max.
15	0,6	0,3	0,5	30,3	19,3	–	21,6	17,4	–	–	32,6	31	29	0,6	0,3
	0,6	0,3	1,6	30,3	19,3	28	–	17,4	18,5	20	32,6	–	–	0,6	0,3
17	0,6	0,3	1,2	35,1	22,1	–	24,9	21	–	–	36	36	34	0,6	0,3
	0,6	0,3	1,2	35,1	22,1	32,5	–	21	21,5	23	36	–	–	0,6	0,3
	0,6	0,3	1,7	35,1	22,1	32,5	–	21	21,5	23	36	–	–	0,6	0,3
	1	0,6	1,2	40,2	24,2	37,1	–	21,2	23,5	25	42,8	–	–	1	0,6
20	1	0,6	0,8	41,5	26,5	–	29,7	24	–	–	41	43	40	1	0,6
	1	0,6	0,8	41,5	26,5	38,8	–	24	26	29	41	–	–	1	0,6
	1	0,6	1,8	41,5	26,5	38,8	–	24	26	29	41	–	–	1	0,6
	1,1	0,6	1	45,5	27,5	42,4	–	24	27	30	45	–	–	1	0,6
	1,1	0,6	1,9	45,5	27,5	42,4	–	24	27	30	45	–	–	1	0,6
25	0,6	0,3	2,4	41,5	30,5	39,3	–	27	30	32	44	–	–	0,6	0,3
	1	0,6	1,3	46,5	31,5	–	34,7	29	–	–	46	48	45	1	0,6
	1	0,6	1,2	46,5	31,5	43,8	–	29	31	34	46	–	–	1	0,6
	1	0,6	1,7	46,5	31,5	43,8	–	29	31	34	46	–	–	1	0,5
	1,1	1,1	1,4	54	34	–	38,1	32	–	–	55	55	53	1	1
	1,1	1,1	1,5	54	34	50,7	–	32	33	37	55	–	–	1	1
	1,1	1,1	1,9	54	34	50,7	–	32	33	37	55	–	–	1	1
30	1	0,6	2,4	48,5	36,5	46,1	–	33	35	38	50	–	–	1	0,6
	1	0,6	1,4	55,5	37,5	–	41,1	34	–	–	56	57	54	1	0,6
	1	0,6	1,5	55,5	37,5	52,5	–	34	37	40	56	–	–	1	0,6
	1	0,6	1,6	55,5	37,5	52,5	–	34	37	40	56	–	–	1	0,6
	1,1	1,1	0,6	62,5	40,5	–	45	37	–	–	65	64	61	1	1
	1,1	1,1	1,2	62,5	40,5	59,2	–	37	40	44	65	–	–	1	1
	1,1	1,1	2,2	62,5	40,5	59,2	–	37	40	44	65	–	–	1	1
	1,5	1,5	2,3	73	45	68,4	–	41	44	47	79	–	–	1,5	1,5
35	1	0,6	2,6	55	42	52,4	–	38	41	44	57	–	–	1	0,6
	1,1	0,6	0,7	64	44	–	48	39	–	–	65	65	63	1	0,6
	1,1	0,6	0,7	64	44	61	–	39	43	46	65	–	–	1	0,6
	1,1	0,6	2,2	64	44	61	–	39	43	46	65	–	–	1	0,6
	1,5	1,1	0,6	70,2	46,2	–	51	42	–	–	71	71	69	1,5	1
	1,5	1,1	0,6	70,2	46,2	66,6	–	42	45	48	71	–	–	1,5	1
	1,5	1,1	3	70,2	46,2	66,6	–	42	45	48	71	–	–	1,5	1
	1,5	1,5	2,6	83	53	78,2	–	46	52	55	89	–	–	1,5	1,5

Cylindrical roller bearings with cage

Non-locating bearings

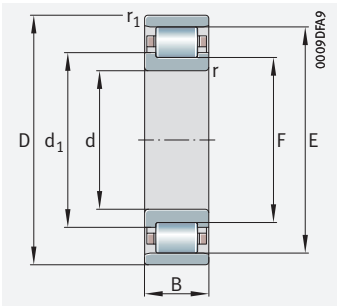

N

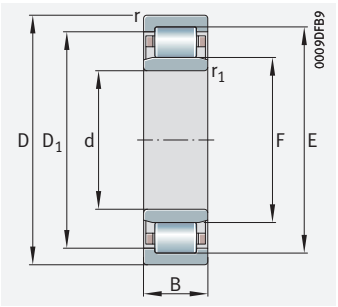

NU

d = 40 – 55 mm

Main dimensions			Basic load ratings		Fatigue limit load	Limiting speed	Speed rating	Mass	Designation
d	D	B	dyn. C_r	stat. C_{0r}	C_{ur}	n_G	$n_{\vartheta r}$	m	➤*429* | *1.12* ➤*430* | *1.13* X-life ➤*419*
			N	N	N	min^{-1}	min^{-1}	≈ kg	
40	68	15	33 500	30 500	3 900	17 700	8 900	0,216	**NU1008-XL-M1**
	80	18	63 000	53 000	8 500	10 900	7 500	0,358	**N208-E-XL-TVP2**
	80	18	63 000	53 000	6 800	10 900	7 500	0,379	**NU208-E-XL-TVP2**
	80	23	83 000	75 000	12 900	10 900	6 300	0,492	**NU2208-E-XL-TVP2**
	90	23	96 000	79 000	13 900	9 500	7 100	0,656	**N308-E-XL-TVP2**
	90	23	96 000	79 000	10 500	9 500	7 100	0,659	**NU308-E-XL-TVP2**
	90	33	132 000	119 000	22 000	9 500	5 800	0,958	**NU2308-E-XL-TVP2**
	110	27	119 000	95 000	12 700	10 500	6 500	1,47	**NU408-XL-M1**
45	75	16	40 000	37 500	4 900	16 000	8 100	0,277	**NU1009-XL-M1**
	85	19	72 000	63 000	10 500	10 200	7 000	0,434	**N209-E-XL-TVP2**
	85	19	72 000	63 000	8 300	10 200	7 000	0,434	**NU209-E-XL-TVP2**
	85	23	87 000	82 000	14 100	10 200	5 800	0,532	**NU2209-E-XL-TVP2**
	100	25	116 000	99 000	17 600	8 500	6 400	0,891	**N309-E-XL-TVP2**
	100	25	116 000	99 000	13 500	8 500	6 400	0,893	**NU309-E-XL-TVP2**
	100	36	163 000	154 000	28 500	8 500	5 200	1,3	**NU2309-E-XL-TVP2**
	120	29	143 000	119 000	16 000	9 600	5 900	1,87	**NU409-XL-M1**
50	80	16	42 500	41 500	5 400	15 000	7 400	0,305	**NU1010-XL-M1**
	90	20	75 000	69 000	11 400	9 700	6 600	0,488	**N210-E-XL-TVP2**
	90	20	75 000	69 000	9 000	9 700	6 600	0,487	**NU210-E-XL-TVP2**
	90	23	92 000	88 000	15 300	9 700	5 300	0,573	**NU2210-E-XL-TVP2**
	110	27	128 000	110 000	20 400	7 800	6 100	1,16	**N310-E-XL-TVP2**
	110	27	131 000	114 000	15 700	7 800	6 000	1,16	**NU310-E-XL-TVP2**
	110	40	193 000	187 000	35 500	7 800	4 900	1,75	**NU2310-E-XL-TVP2**
	130	31	175 000	148 000	20 200	8 600	5 300	2,33	**NU410-XL-M1**
55	90	18	49 500	50 000	6 800	13 500	6 900	0,446	**NU1011-XL-M1**
	100	21	99 000	95 000	16 400	8 700	5 800	0,668	**N211-E-XL-TVP2**
	100	21	99 000	95 000	13 000	8 700	5 800	0,665	**NU211-E-XL-TVP2**
	100	25	117 000	118 000	21 000	8 700	4 700	0,796	**NU2211-E-XL-TVP2**
	120	29	159 000	139 000	26 000	7 000	5 500	1,48	**N311-E-XL-TVP2**
	120	29	159 000	139 000	19 500	7 000	5 500	1,48	**NU311-E-XL-TVP2**
	120	43	235 000	230 000	44 000	7 000	4 500	2,23	**NU2311-E-XL-TVP2**
	140	33	187 000	164 000	22 500	8 200	5 100	2,83	**NU411-XL-M1**

medias *https://www.schaeffler.de/std/1F9A*

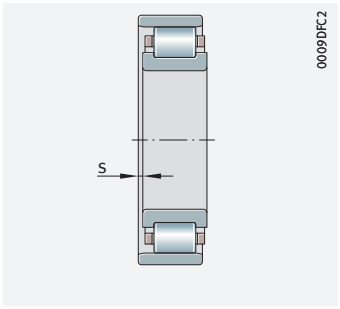

Axial displacement "s" for N and NU

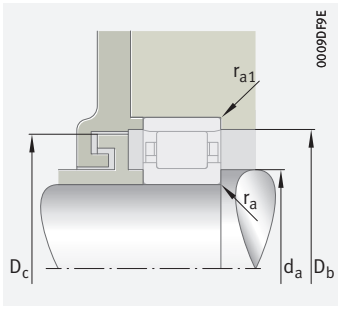

Mounting dimensions for N

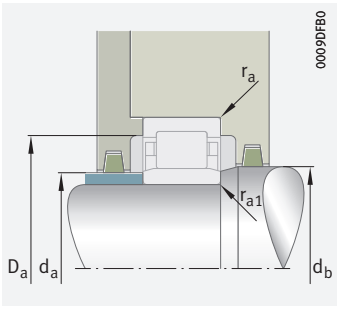

Mounting dimensions for NU

Dimensions								Mounting dimensions							
d	r	r_1	s	E	F	D_1	d_1	d_a		d_b	D_a	D_b	D_c	r_a	r_{a1}
	min.	min.				≈	≈	min.	max.	min.	max.	min.	max.	max.	max.
40	1	0,6	2	61	47	58,2	–	43	46	49	63	–	–	1	0,6
	1,1	1,1	1	71,5	49,5	–	54	47	–	–	73	73	70	1	1
	1,1	1,1	1	71,5	49,5	68,3	–	47	49	52	73	–	–	1	1
	1,1	1,1	1,5	71,5	49,5	68,3	–	47	49	52	73	–	–	1	1
	1,5	1,5	1,2	80	52	–	57,6	49	–	–	81	81	79	1,5	1,5
	1,5	1,5	1,3	80	52	75,9	–	49	51	55	81	–	–	1,5	1,5
	1,5	1,5	2,7	80	52	75,9	–	49	51	55	81	–	–	1,5	1,5
	2	2	2,8	92	58	86,4	–	53	57	60	97	–	–	2	2
45	1	0,6	2,5	67,5	52,5	64,5	–	48	52	54	70	–	–	1	0,6
	1,1	1,1	1	76,5	54,5	–	59	52	–	–	78	78	75	1	1
	1,1	1,1	1	76,5	54,5	73,3	–	52	54	57	78	–	–	1	1
	1,1	1,1	1,5	76,5	54,5	73,3	–	52	54	57	78	–	–	1	1
	1,5	1,5	1	88,5	58,5	–	64,4	54	–	–	91	90	87	1,5	1,5
	1,5	1,5	1	88,5	58,5	84,1	–	54	57	60	91	–	–	1,5	1,5
	1,5	1,5	2,5	88,5	58,5	84,1	–	54	57	60	91	–	–	1,5	1,5
	2	2	2,9	100,5	64,5	94,6	–	58	63	66	107	–	–	2	2
50	1	0,6	2,1	72,5	57,5	69,5	–	53	57	59	75	–	–	1	0,6
	1,1	1,1	1,3	81,5	59,5	–	64	57	–	–	83	83	80	1	1
	1,1	1,1	1,3	81,5	59,5	78,3	–	57	58	62	83	–	–	1	1
	1,1	1,1	1,3	81,5	59,5	78,3	–	57	58	62	83	–	–	1	1
	2	2	1,7	97	65	–	71,3	61	–	–	99	98	96	2	2
	2	2	1,7	97	65	92,5	–	61	63	67	99	–	–	2	2
	2	2	3,2	97	65	92,5	–	61	63	67	99	–	–	2	2
	2,1	2,1	3	110,8	70,8	104,3	–	64	69	73	116	–	–	2	2
55	1,1	1	2,4	80,5	64,5	77,3	–	60	63	66	84	–	–	1,1	1
	1,5	1,1	0,8	90	66	–	70,8	62	–	–	91	91	89	1,5	1
	1,5	1,1	0,8	90	66	86,6	–	62	65	68	91	–	–	1,5	1
	1,5	1,1	1,3	90	66	86,6	–	62	65	68	91	–	–	1,5	1
	2	2	1,8	106,5	70,5	–	77,5	66	–	–	109	108	105	2	2
	2	2	1,8	106,5	70,5	101,4	–	66	69	72	109	–	–	2	2
	2	2	3,3	106,5	70,5	101,4	–	66	69	72	109	–	–	2	2
	2,1	2,1	3,3	117,2	77,2	110,7	–	69	76	79	126	–	–	2	2

Cylindrical roller bearings with cage

Non-locating bearings

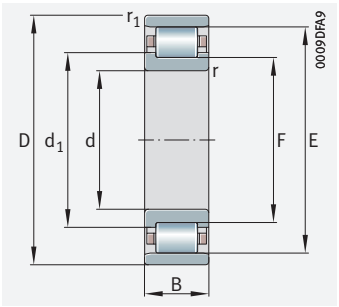

N

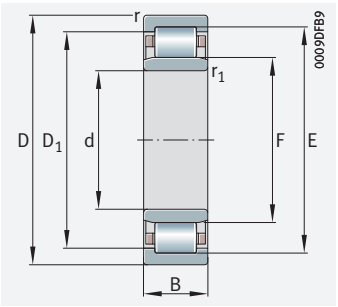

NU

d = 60 – 75 mm

Main dimensions			Basic load ratings		Fatigue limit load	Limiting speed	Speed rating	Mass	Designation
d	D	B	dyn. C_r	stat. C_{0r}	C_{ur}	n_G	$n_{\vartheta r}$	m	➤*429* | *1.12* ➤*430* | *1.13* X-life ➤*419*
			N	N	N	min^{-1}	min^{-1}	≈ kg	
60	95	18	52 000	55 000	7 400	12 800	6 400	0,48	**NU1012-XL-M1**
	110	22	112 000	103 000	14 200	7 700	5 300	0,824	**NU212-E-XL-TVP2**
	110	22	112 000	103 000	18 100	7 700	5 300	0,827	**N212-E-XL-TVP2**
	110	28	152 000	153 000	28 000	7 700	4 300	1,08	**NU2212-E-XL-TVP2**
	130	31	177 000	157 000	29 000	6 500	5 200	1,84	**N312-E-XL-TVP2**
	130	31	177 000	157 000	21 900	6 500	5 200	1,85	**NU312-E-XL-TVP2**
	130	46	265 000	260 000	51 000	6 500	4 250	2,78	**NU2312-E-XL-TVP2**
	150	35	211 000	184 000	24 900	7 500	4 800	3,41	**NU412-XL-M1**
65	100	18	53 000	58 000	7 800	12 200	5 900	0,507	**NU1013-XL-M1**
	120	23	128 000	120 000	21 200	7 100	4 900	1,05	**N213-E-XL-TVP2**
	120	23	128 000	120 000	16 800	7 100	4 900	1,04	**NU213-E-XL-TVP2**
	120	31	177 000	182 000	34 000	7 100	4 100	1,43	**NU2213-E-XL-TVP2**
	140	33	214 000	191 000	35 000	5 900	4 800	2,28	**N313-E-XL-TVP2**
	140	33	214 000	191 000	26 500	5 900	4 800	2,28	**NU313-E-XL-TVP2**
	140	48	295 000	285 000	55 000	5 900	4 000	3,32	**NU2313-E-XL-TVP2**
	160	37	230 000	203 000	27 000	7 000	4 600	4,08	**NU413-XL-M1**
70	110	20	77 000	81 000	10 400	10 700	5 500	0,706	**NU1014-XL-M1**
	125	24	141 000	138 000	24 700	6 800	4 650	1,16	**N214-E-XL-TVP2**
	125	24	141 000	138 000	19 500	6 800	4 650	1,15	**NU214-E-XL-TVP2**
	125	31	185 000	195 000	36 500	6 800	3 850	1,52	**NU2214-E-XL-TVP2**
	150	35	242 000	222 000	40 500	5 500	4 500	2,79	**N314-E-XL-TVP2**
	150	35	242 000	222 000	30 500	5 500	4 500	2,79	**NU314-E-XL-TVP2**
	150	51	325 000	325 000	61 000	5 500	3 800	4,02	**NU2314-E-XL-TVP2**
	180	42	285 000	255 000	33 500	6 200	4 250	5,97	**NU414-XL-M1**
75	115	20	78 000	85 000	11 000	10 300	5 200	0,737	**NU1015-XL-M1**
	130	25	155 000	157 000	28 000	6 500	4 400	1,29	**N215-E-XL-TVP2**
	130	25	155 000	157 000	22 200	6 500	4 400	1,27	**NU215-E-XL-TVP2**
	130	31	192 000	208 000	38 500	6 500	3 600	1,6	**NU2215-E-XL-TVP2**
	160	37	285 000	265 000	47 000	5 100	4 150	3,34	**N315-E-XL-TVP2**
	160	37	285 000	265 000	35 500	5 100	4 150	3,33	**NU315-E-XL-TVP2**
	160	55	390 000	395 000	73 000	5 100	3 550	4,95	**NU2315-E-XL-TVP2**
	190	45	325 000	295 000	38 000	5 800	4 100	7,09	**NU415-XL-M1**

medias *https://www.schaeffler.de/std/1F9A*

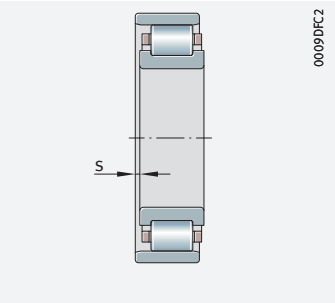

Axial displacement "s" for N and NU

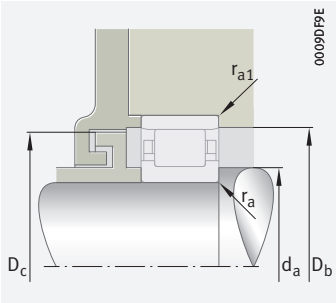

Mounting dimensions for N

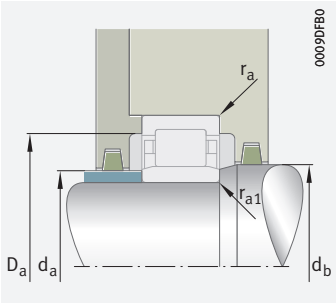

Mounting dimensions for NU

Dimensions								Mounting dimensions							
d	r	r_1	s	E	F	D_1	d_1	d_a		d_b	D_a	D_b	D_c	r_a	r_{a1}
	min.	min.				≈	≈	min.	max.	min.	max.	min.	max.	max.	max.
60	1,1	1	2,4	85,5	69,5	–	82,3	65	68	71	89	–	–	1,1	1
	1,5	1,5	1,6	100	72	–	96,1	69	71	75	101	–	–	1,5	1,5
	1,5	1,5	1,6	100	72	77,6	–	69	–	–	101	101	99	1,5	1,5
	1,5	1,5	1,6	100	72	–	96,1	69	71	75	101	–	–	1,5	1,5
	2,1	2,1	1,9	115	77	84,4	–	72	–	–	118	116	114	2,1	2,1
	2,1	2,1	1,8	115	77	–	109,6	72	75	79	118	–	–	2,1	2,1
	2,1	2,1	3,5	115	77	–	109,6	72	75	79	118	–	–	2,1	2,1
	2,1	2,1	3,4	127	83	–	119,5	74	82	85	136	–	–	2	2
65	1,1	1	3,3	90,5	74,5	87,3	–	70	73	76	94	–	–	1,1	1
	1,5	1,5	1,4	108,5	78,5	–	84,4	74	–	–	111	110	107	1,5	1,5
	1,5	1,5	1,4	108,5	78,5	104,3	–	74	77	81	111	–	–	1,5	1,5
	1,5	1,5	1,9	108,5	78,5	104,3	–	74	77	81	111	–	–	1,5	1,5
	2,1	2,1	1,4	124,5	82,5	–	90,5	77	–	–	128	126	123	2,1	2,1
	2,1	2,1	1,5	124,5	82,5	118,6	–	77	81	85	128	–	–	2,1	2,1
	2,1	2,1	4	124,5	82,5	118,6	–	77	81	85	128	–	–	2,1	2,1
	2,1	2,1	3,5	135,3	89,3	127,7	–	79	88	91	146	–	–	2	2
70	1,1	1	2,5	100	80	96	–	75	78	82	104	–	–	1	1
	1,5	1,5	1,2	113,5	83,5	–	89,4	79	–	–	116	115	112	1,5	1,5
	1,5	1,5	1,2	113,5	83,5	109,4	–	79	82	86	116	–	–	1,5	1,5
	1,5	1,5	1,6	113,5	83,5	109,4	–	79	82	86	116	–	–	1,5	1,5
	2,1	2,1	1,6	133	89	–	97,4	82	–	–	138	135	131	2,1	2,1
	2,1	2,1	1,7	133	89	126,8	–	82	87	92	138	–	–	2,1	2,1
	2,1	2,1	4,7	133	89	126,8	–	82	87	92	138	–	–	2,1	2,1
	3	3	4	152	100	142,7	–	86	99	102	164	–	–	2,5	2,5
75	1,1	1	2,5	105	85	101,7	–	80	83	87	109	–	–	1,1	1
	1,5	1,5	1,1	118,5	88,5	–	94,4	84	–	–	121	120	117	1,5	1,5
	1,5	1,5	1,2	118,5	88,5	114,4	–	84	87	90	121	–	–	1,5	1,5
	1,5	1,5	1,6	118,5	88,5	114,4	–	84	87	90	121	–	–	1,5	1,5
	2,1	2,1	1,1	143	95	–	104,1	87	–	–	148	145	141	2,1	2,1
	2,1	2,1	1,2	143	95	136,2	–	87	93	97	148	–	–	2,1	2,1
	2,1	2,1	4,2	143	95	136,2	–	87	93	97	148	–	–	2,1	2,1
	3	3	4,5	160,5	104,5	150,7	–	91	103	107	174	–	–	2,5	2,5

Cylindrical roller bearings with cage

Non-locating bearings

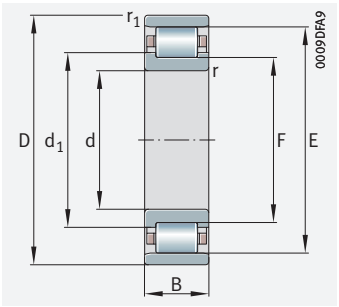

N

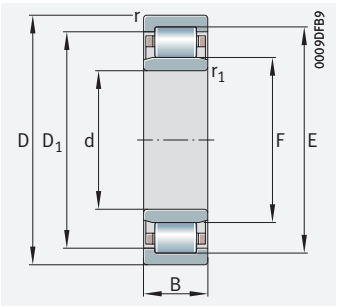

NU

d = 80 – 95 mm

Main dimensions			Basic load ratings		Fatigue limit load	Limiting speed	Speed rating	Mass	Designation
d	D	B	dyn. C_r	stat. C_{0r}	C_{ur}	n_G	$n_{\vartheta r}$	m	➤*429* | *1.12* ➤*430* | *1.13* X-life ➤*419*
			N	N	N	min^{-1}	min^{-1}	≈ kg	
80	125	22	91 000	99 000	13 200	9 400	5 000	0,99	**NU1016-XL-M1**
	140	26	166 000	168 000	29 500	6 100	4 200	1,55	**N216-E-XL-TVP2**
	140	26	166 000	168 000	23 100	6 100	4 200	1,55	**NU216-E-XL-TVP2**
	140	33	221 000	244 000	44 500	6 100	3 400	2,01	**NU2216-E-XL-TVP2**
	170	39	300 000	275 000	50 000	4 800	4 100	4,12	**N316-E-XL-TVP2**
	170	39	300 000	275 000	37 500	4 800	4 100	3,96	**NU316-E-XL-TVP2**
	170	58	420 000	425 000	80 000	4 800	3 450	5,89	**NU2316-E-XL-TVP2**
	200	48	395 000	365 000	47 000	5 400	3 750	8,37	**NU416-XL-M1**
85	130	22	93 000	103 000	13 700	9 000	4 750	1,04	**NU1017-XL-M1**
	150	28	194 000	194 000	34 000	5 600	4 000	1,92	**N217-E-XL-TVP2**
	150	28	194 000	194 000	26 500	5 600	4 000	1,91	**NU217-E-XL-TVP2**
	150	36	255 000	275 000	50 000	5 600	3 300	2,5	**NU2217-E-XL-TVP2**
	180	41	340 000	325 000	58 000	5 900	3 800	5,3	**N317-E-XL-M1**
	180	41	320 000	300 000	40 500	4 550	3 900	4,62	**NU317-E-XL-TVP2**
	180	60	435 000	445 000	82 000	4 550	3 300	6,72	**NU2317-E-XL-TVP2**
	210	52	420 000	385 000	49 000	5 200	3 850	9,85	**NU417-XL-M1**
90	140	24	111 000	124 000	16 600	8 400	4 550	1,36	**NU1018-XL-M1**
	160	30	215 000	217 000	37 500	5 200	3 900	2,37	**N218-E-XL-TVP2**
	160	30	215 000	217 000	29 500	5 200	3 900	2,36	**NU218-E-XL-TVP2**
	160	40	285 000	315 000	57 000	5 200	3 250	3,17	**NU2218-E-XL-TVP2**
	190	43	370 000	350 000	60 000	5 500	3 650	6,19	**N318-E-XL-M1**
	190	43	370 000	350 000	45 500	4 250	3 650	5,39	**NU318-E-XL-TVP2**
	190	64	510 000	530 000	94 000	4 250	3 000	8,04	**NU2318-E-XL-TVP2**
	225	54	465 000	425 000	54 000	4 800	3 500	11,8	**NU418-XL-M1**
95	145	24	113 000	130 000	17 200	8 100	4 350	1,42	**NU1019-XL-M1**
	170	32	260 000	265 000	45 000	4 850	3 650	2,89	**N219-E-XL-TVP2**
	170	32	260 000	265 000	35 000	4 850	3 650	2,88	**NU219-E-XL-TVP2**
	170	43	340 000	370 000	66 000	4 850	3 050	3,9	**NU2219-E-XL-TVP2**
	200	45	390 000	380 000	65 000	5 300	3 550	7,12	**N319-E-XL-M1**
	200	45	390 000	380 000	49 000	4 050	3 550	6,32	**NU319-E-XL-TVP2**
	200	67	540 000	580 000	101 000	4 050	2 800	9,4	**NU2319-E-XL-TVP2**
	240	55	495 000	470 000	59 000	4 550	3 200	13,9	**NU419-XL-M1**

medias *https://www.schaeffler.de/std/1F9A*

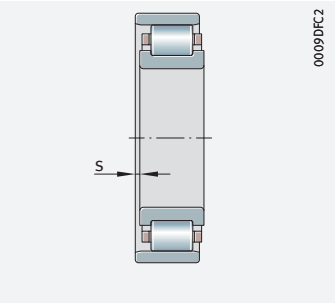

Axial displacement "s" for N and NU

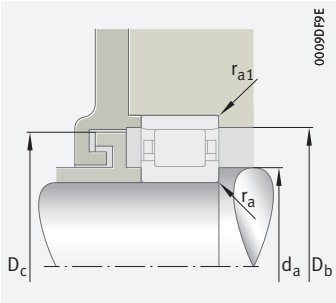

Mounting dimensions for N

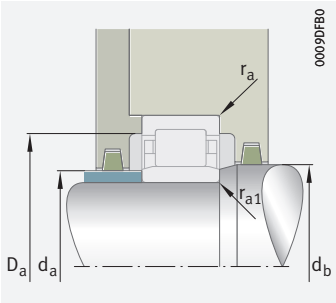

Mounting dimensions for NU

Dimensions								Mounting dimensions							
d	r	r_1	s	E	F	D_1	d_1	d_a		d_b	D_a	D_b	D_c	r_a	r_{a1}
	min.	min.				≈	≈	min.	max.	min.	max.	min.	max.	max.	max.
80	1,1	1	2,7	113,5	91,5	109,8	–	85	90	94	119	–	–	1	1
	2	2	1,2	127,3	95,3	–	101,5	91	–	–	129	129	126	2	2
	2	2	1,3	127,3	95,3	122,9	–	91	94	97	129	–	–	2	2
	2	2	1,3	127,3	95,3	122,9	–	91	94	97	129	–	–	2	2
	2,1	2,1	0,6	151	101	–	110,4	92	–	–	158	153	149	2,1	2,1
	2,1	2,1	0,7	151	101	143,9	–	92	99	105	158	–	–	2,1	2,1
	2,1	2,1	3,7	151	101	143,9	–	92	99	105	158	–	–	2,1	2,1
	3	3	4,6	170	110	159,7	–	96	109	112	184	–	–	2,5	2,5
85	1,1	1	4	118,5	96,5	114,8	–	90	95	99	124	–	–	1	1
	2	2	0,7	136,5	100,5	–	107,5	96	–	–	139	138	135	2	2
	2	2	0,8	136,5	100,5	131,5	–	96	99	104	139	–	–	2	2
	2	2	1,3	136,5	100,5	131,5	–	96	99	104	139	–	–	2	2
	3	3	1,1	160	108	–	117,8	99	–	–	166	162	158	2,5	2,5
	3	3	1,3	160	108	152,7	–	99	106	110	166	–	–	2,5	2,5
	3	3	4,7	160	108	152,7	–	99	106	110	166	–	–	2,5	2,5
	4	4	5,2	177	113	165,7	–	105	111	115	190	–	–	3	3
90	1,5	1,1	3	127	103	122,9	–	96	101	106	133	–	–	1,5	1
	2	2	1,4	145	107	–	114,3	101	–	–	149	147	143	2	2
	2	2	1,5	145	107	139,7	–	101	105	109	149	–	–	2	2
	2	2	2,5	145	107	139,7	–	101	105	109	149	–	–	2	2
	3	3	1,3	169,5	113,5	–	124	104	–	–	176	171	168	2,5	2,5
	3	3	1,5	169,5	113,5	161,6	–	104	111	117	176	–	–	2,5	2,5
	3	3	5	169,5	113,5	161,6	–	104	111	117	176	–	–	2,5	2,5
	4	4	5	191,5	123,5	179,7	–	110	122	125	205	–	–	3	3
95	1,5	1,1	3,1	132	108	127,9	–	101	106	111	138	–	–	1,5	1
	2,1	2,1	0,6	154,5	112,5	–	120,5	107	–	–	158	156	153	2,1	2,1
	2,1	2,1	0,7	154,5	112,5	148,6	–	107	111	116	158	–	–	2,1	2,1
	2,1	2,1	2,2	154,5	112,5	148,6	–	107	111	116	158	–	–	2,1	2,1
	3	3	1,4	177,5	121,5	–	132	109	–	–	186	179	176	2,5	2,5
	3	3	1,4	177,5	121,5	169,6	–	109	119	124	186	–	–	2,5	2,5
	3	3	5,6	177,5	121,5	169,6	–	109	119	124	186	–	–	2,5	2,5
	4	4	5,2	201,5	133,5	189,7	–	115	132	136	220	–	–	3	3

Cylindrical roller bearings with cage

Non-locating bearings

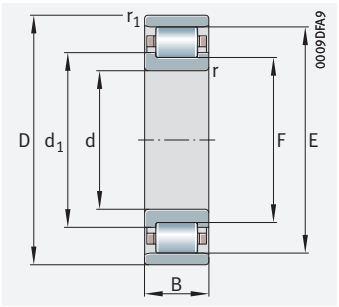

N

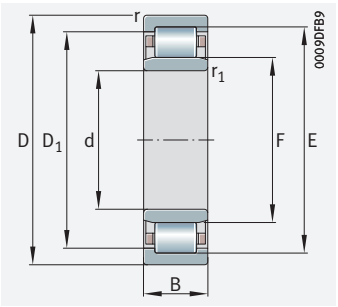

NU

d = 100 – 130 mm

Main dimensions			Basic load ratings		Fatigue limit load	Limiting speed	Speed rating	Mass	Designation
d	D	B	dyn. C_r	stat. C_{0r}	C_{ur}	n_G	$n_{\vartheta r}$	m	➤*429* | *1.12* ➤*430* | *1.13* X-life ➤*419*
			N	N	N	min^{-1}	min^{-1}	≈ kg	
100	150	24	116 000	135 000	17 700	7 800	4 150	1,46	**NU1020-XL-M1**
	180	34	295 000	305 000	52 000	4 550	3 450	3,5	**N220-E-XL-TVP2**
	180	34	295 000	305 000	40 500	4 550	3 450	3,49	**NU220-E-XL-TVP2**
	180	46	395 000	445 000	78 000	4 550	2 900	4,77	**NU2220-E-XL-TVP2**
	215	47	450 000	425 000	72 000	4 850	3 350	8,75	**N320-E-XL-M1**
	215	47	450 000	425 000	54 000	3 700	3 350	7,67	**NU320-E-XL-TVP2**
	215	73	680 000	720 000	126 000	3 700	2 500	12,1	**NU2320-E-XL-TVP2**
	250	58	550 000	530 000	65 000	4 350	2 950	15,8	**NU420-XL-M1**
105	160	26	132 000	154 000	20 000	7 300	4 050	1,84	**NU1021-XL-M1**
	190	36	310 000	320 000	54 000	5 600	3 400	4,63	**N221-E-XL-M1**
	190	36	310 000	320 000	41 500	4 350	3 400	4,08	**NU221-E-XL-TVP2**
	260	60	610 000	590 000	71 000	4 150	2 750	17,7	**NU421-XL-M1**
110	170	28	167 000	191 000	25 000	6 700	3 850	2,31	**NU1022-XL-M1**
	200	38	345 000	365 000	47 000	4 100	3 250	4,84	**NU222-E-XL-TVP2**
	200	38	345 000	365 000	60 000	4 100	3 250	4,85	**N222-E-XL-TVP2**
	200	53	455 000	520 000	88 000	4 100	2 750	6,76	**NU2222-E-XL-TVP2**
	240	50	495 000	475 000	60 000	3 350	3 050	10,3	**NU322-E-XL-TVP2**
	240	50	520 000	510 000	86 000	4 350	2 950	11,7	**N322-E-XL-M1**
	240	80	750 000	800 000	140 000	3 350	2 290	16,6	**NU2322-E-XL-TVP2**
	280	65	680 000	660 000	80 000	3 850	2 550	22,4	**NU422-XL-M1**
120	180	28	175 000	208 000	27 000	6 400	3 550	2,47	**NU1024-XL-M1**
	215	40	390 000	415 000	69 000	3 750	3 050	5,67	**N224-E-XL-TVP2**
	215	40	390 000	415 000	54 000	3 750	3 050	5,8	**NU224-E-XL-TVP2**
	215	58	530 000	610 000	105 000	3 750	2 500	8,38	**NU2224-E-XL-TVP2**
	260	55	610 000	600 000	73 000	3 050	2 650	13,3	**NU324-E-XL-TVP2**
	260	55	610 000	600 000	97 000	3 950	2 650	15,3	**N324-E-XL-M1**
	260	86	930 000	1 010 000	170 000	3 950	1 980	23,5	**NU2324-E-XL-M1**
	310	72	850 000	840 000	99 000	3 450	2 200	30,8	**NU424-XL-M1**
130	200	33	212 000	250 000	32 000	5 700	3 500	3,74	**NU1026-XL-M1**
	230	40	425 000	445 000	56 000	3 500	2 800	6,5	**NU226-E-XL-TVP2**
	230	40	425 000	445 000	71 000	3 500	2 800	6,51	**N226-E-XL-TVP2**
	230	64	620 000	730 000	121 000	3 500	2 280	10,4	**NU2226-E-XL-TVP2**
	280	58	680 000	670 000	81 000	2 850	2 430	16,2	**NU326-E-XL-TVP2**
	280	58	720 000	720 000	115 000	3 700	2 340	18,4	**N326-E-XL-M1**
	280	93	1 080 000	1 220 000	200 000	3 700	1 750	28,8	**NU2326-E-XL-M1**

medias *https://www.schaeffler.de/std/1F9A*

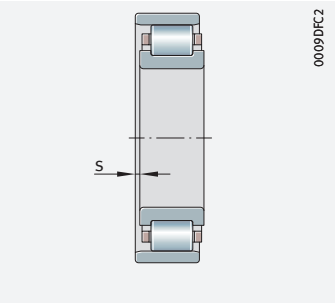

Axial displacement "s" for N and NU

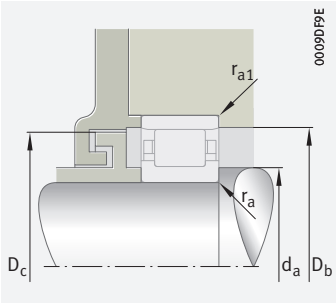

Mounting dimensions for N

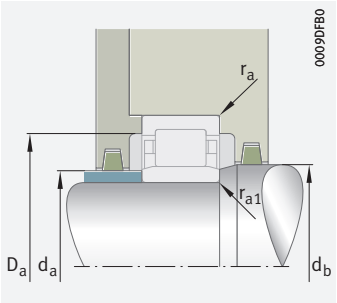

Mounting dimensions for NU

Dimensions								Mounting dimensions							
d	r	r_1	s	E	F	D_1	d_1	d_a		d_b	D_a	D_b	D_c	r_a	r_{a1}
	min.	min.				≈	≈	min.	max.	min.	max.	min.	max.	max.	max.
100	1,5	1,1	2,9	137	113	132,9	–	106	111	116	143	–	–	1,5	1
	2,1	2,1	1,4	163	119	–	127,3	112	–	–	168	165	161	2,1	2,1
	2,1	2,1	1,5	163	119	156,9	–	112	117	122	168	–	–	2,1	2,1
	2,1	2,1	2,5	163	119	156,9	–	112	117	122	168	–	–	2,1	2,1
	3	3	1,2	191,5	127,5	–	139,4	114	–	–	201	193	190	2,5	2,5
	3	3	1,2	191,5	127,5	182	–	114	125	132	201	–	–	2,5	2,5
	3	3	4,2	191,5	127,5	182	–	114	125	132	201	–	–	2,5	2,5
	4	4	5,7	211	139	198,2	–	120	137	141	230	–	–	3	3
105	2	1,1	4,5	145,5	119,5	141	–	111	118	122	151	–	–	2	1
	2,1	2,1	1,2	171,5	125,5	–	134,5	117	–	–	178	173	170	2,1	2,1
	2,1	2,1	1,3	171,5	125,5	165,1	–	117	123	128	178	–	–	2,1	2,1
	4	4	5,7	220,5	144,5	207,4	–	125	143	147	240	–	–	3	3
110	2	1,1	3,2	155	125	–	149,7	116	124	128	161	–	–	2	1
	2,1	2,1	1,5	180,5	132,5	–	173,8	122	130	135	188	–	–	2,1	2,1
	2,1	2,1	1,4	180,5	132,5	141,6	–	122	–	–	188	182	179	2	2
	2,1	2,1	4	180,5	132,5	–	173,8	122	130	135	188	–	–	2,1	2,1
	3	3	1,3	211	143	–	200,9	124	140	145	226	–	–	2,5	2,5
	3	3	1,3	211	143	155,6	–	124	–	–	226	213	209	2,5	2,5
	3	3	5,8	211	143	–	200,9	124	140	145	226	–	–	2,5	2,5
	4	4	6,2	235	155	–	220,9	130	153	157	260	–	–	3	3
120	2	1,1	3,2	165	135	–	159,7	126	134	138	171	–	–	2	1
	2,1	2,1	1,4	195,5	143,5	153,2	–	132	–	–	203	197	194	2,1	2,1
	2,1	2,1	1,4	195,5	143,5	–	187,8	132	141	146	203	–	–	2,1	2,1
	2,1	2,1	4,5	195,5	143,5	–	187,8	132	141	146	203	–	–	2,1	2,1
	3	3	3,5	230	154	–	218,7	134	151	156	246	–	–	2,5	2,5
	3	3	3,5	230	154	168,7	–	134	–	–	246	232	228	2,5	2,5
	3	3	7,2	230	154	–	218,7	134	151	156	246	–	–	2,5	2,5
	5	5	6,9	260	170	–	243,9	144	168	172	286	–	–	4	4
130	2	1,1	3,9	182	148	–	175,9	136	146	151	191	–	–	2	1
	3	3	1,2	209,5	153,5	–	201,2	144	151	158	216	–	–	2,5	2,5
	3	3	1,2	209,5	153,5	164	–	144	–	–	216	212	207	2,5	2,5
	3	3	5,2	209,5	153,5	–	201,2	144	151	158	216	–	–	2,5	2,5
	4	4	3,5	247	167	–	235,2	147	164	169	263	–	–	3	3
	4	4	3,5	247	167	181,7	–	147	–	–	263	249	245	3	3
	4	4	8,1	247	167	–	235,2	147	164	169	263	–	–	3	3

Cylindrical roller bearings with cage

Non-locating bearings

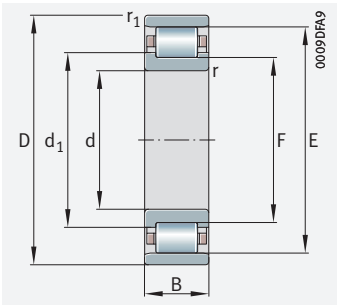

N

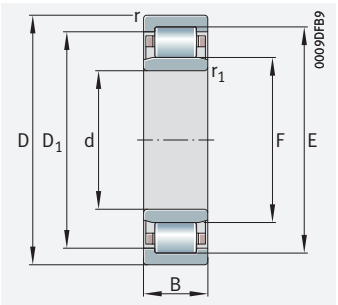

NU

d = 140 – 180 mm

Main dimensions			Basic load ratings		Fatigue limit load	Limiting speed	Speed rating	Mass	Designation
d	D	B	dyn. C_r	stat. C_{0r}	C_{ur}	n_G	$n_{\vartheta r}$	m	➤*429* | *1.12* ➤*430* | *1.13* X-life ➤*419*
			N	N	N	min^{-1}	min^{-1}	≈ kg	
140	210	33	216 000	265 000	33 000	5 400	3 250	3,94	**NU1028-XL-M1**
	250	42	460 000	510 000	79 000	4 250	2 600	9,3	**N228-E-XL-M1**
	250	42	460 000	510 000	62 000	4 250	2 600	9,31	**NU228-E-XL-M1**
	250	68	670 000	830 000	134 000	4 250	2 050	14,5	**NU2228-E-XL-M1**
	300	62	790 000	800 000	126 000	3 450	2 170	22,5	**N328-E-XL-M1**
	300	62	790 000	800 000	95 000	2 650	2 170	20,1	**NU328-E-XL-TVP2**
	300	102	1 210 000	1 390 000	224 000	3 450	1 620	36	**NU2328-E-XL-M1**
150	225	35	248 000	310 000	39 000	5 100	3 100	4,93	**NU1030-XL-M1**
	270	45	520 000	590 000	90 000	3 950	2 350	11,8	**N230-E-XL-M1**
	270	45	520 000	590 000	70 000	3 950	2 350	11,9	**NU230-E-XL-M1**
	270	73	780 000	970 000	156 000	3 950	1 850	18,6	**NU2230-E-XL-M1**
	320	65	900 000	930 000	141 000	3 200	1 940	26,9	**N330-E-XL-M1**
	320	65	900 000	930 000	108 000	3 200	1 940	27	**NU330-E-XL-M1**
	320	108	1 380 000	1 600 000	250 000	3 200	1 460	43,4	**NU2330-E-XL-M1**
160	240	38	290 000	355 000	44 000	4 650	3 000	5,92	**NU1032-XL-M1**
	290	48	590 000	670 000	102 000	3 650	2 160	14,7	**N232-E-XL-M1**
	290	48	590 000	670 000	80 000	3 650	2 160	14,7	**NU232-E-XL-M1**
	290	80	940 000	1 170 000	189 000	3 600	1 660	23,7	**NU2232-E-XL-M1**
	340	68	860 000	1 060 000	130 000	3 000	1 770	32,6	**N332-E-M1**
	340	68	860 000	1 060 000	94 000	3 000	1 770	31,8	**NU332-E-M1**
	340	114	1 300 000	1 800 000	231 000	3 000	1 350	51,5	**NU2332-E-M1**
170	260	42	350 000	435 000	52 000	4 300	2 750	8,03	**NU1034-XL-M1**
	310	52	700 000	780 000	118 000	3 350	1 970	18	**N234-E-XL-M1**
	310	52	700 000	780 000	93 000	3 350	1 970	18,1	**NU234-E-XL-M1**
	310	86	1 130 000	1 400 000	218 000	3 300	1 470	29,4	**NU2234-E-XL-M1**
	360	72	960 000	1 210 000	141 000	2 800	1 610	37,9	**N334-E-TB-M1**
	360	72	960 000	1 210 000	97 000	2 800	1 610	38	**NU334-E-TB-M1**
	360	120	1 490 000	2 070 000	232 000	2 800	1 210	61,4	**NU2334-EX-TB-M1**
180	280	46	425 000	520 000	64 000	3 900	2 550	10,5	**NU1036-XL-M1**
	320	52	730 000	830 000	124 000	3 250	1 850	18,9	**N236-E-XL-M1**
	320	52	730 000	830 000	98 000	3 250	1 850	18,9	**NU236-E-XL-M1**
	320	86	1 180 000	1 490 000	230 000	3 200	1 380	30,7	**NU2236-E-XL-M1**
	380	75	1 040 000	1 320 000	103 000	2 650	1 500	43,9	**NU336-E-TB-M1**
	380	126	1 680 000	2 330 000	260 000	2 600	1 120	71,8	**NU2336-EX-TB-M1**

medias *https://www.schaeffler.de/std/1F9A*

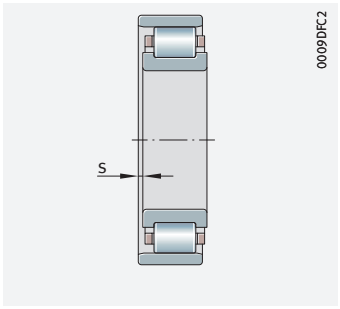

Axial displacement "s" for N and NU

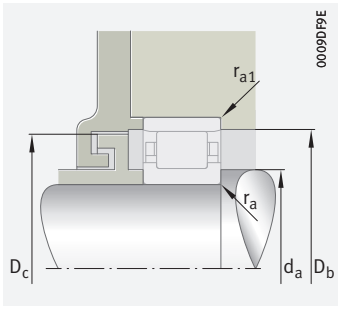

Mounting dimensions for N

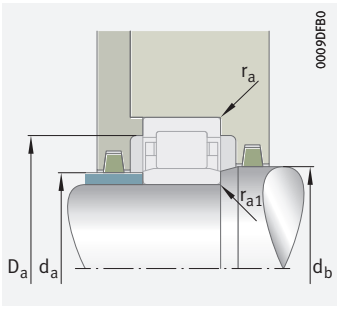

Mounting dimensions for NU

Dimensions								Mounting dimensions							
d	r	r_1	s	E	F	D_1	d_1	d_a		d_b	D_a	D_b	D_c	r_a	r_{a1}
	min.	min.				≈	≈	min.	max.	min.	max.	min.	max.	max.	max.
140	2	1,1	3,8	192	158	185,9	–	146	156	161	201	–	–	2	1
	3	3	3,8	225	169	–	179,4	154	–	–	236	227	223	2,5	2,5
	3	3	3,8	225	169	216,7	–	154	166	171	236	–	–	2,5	2,5
	3	3	7	225	169	216,7	–	154	166	171	236	–	–	2,5	2,5
	4	4	5,2	264	180	–	195,4	157	–	–	283	266	262	3	3
	4	4	5,2	264	180	251,7	–	157	176	182	283	–	–	3	3
	4	4	9,2	264	180	251,7	–	157	176	182	283	–	–	3	3
150	2,1	1,5	4,2	205,5	169,5	199	–	158	167	173	215	–	–	2,1	1,5
	3	3	4	242	182	–	193,1	164	–	–	256	244	240	2,5	2,5
	3	3	4	242	182	233,2	–	164	179	184	256	–	–	2,5	2,5
	3	3	7,5	242	182	233,2	–	164	179	184	256	–	–	2,5	2,5
	4	4	5,5	283	193	–	209,5	167	–	–	303	285	281	3	3
	4	4	5,5	283	193	269,8	–	167	190	195	303	–	–	3	3
	4	4	9,7	283	193	269,8	–	167	190	195	303	–	–	3	3
160	2,1	1,5	4,3	220	180	212,9	–	168	178	184	230	–	–	2,1	1,5
	3	3	4,1	259	195	–	206,8	174	–	–	276	261	257	2,5	2,5
	3	3	4,1	259	195	249,6	–	174	192	197	276	–	–	2,5	2,5
	3	3	7,2	261	193	251,1	–	174	192	197	276	–	–	2,5	2,5
	4	4	5,5	300	204	–	221,6	177	–	–	323	302	298	3	3
	4	4	5,6	300	204	286	–	177	200	211	323	–	–	3	3
	4	4	9,9	300	204	286	–	177	200	211	323	–	–	3	3
170	2,1	2,1	4,8	237	193	229,1	–	180	190	197	250	–	–	2,1	2,1
	4	4	4,3	279	207	–	218,4	187	–	–	293	281	277	3	3
	4	4	4,3	279	207	268,5	–	187	204	211	293	–	–	3	3
	4	4	7,2	281	205	269,9	–	187	204	211	293	–	–	3	3
	4	4	5,9	318	218	–	238	187	–	–	343	320	316	3	3
	4	4	6	318	218	298	–	187	215	221	343	–	–	3	3
	4	4	10,2	320	216	299,2	–	187	214	218	343	–	–	3	3
180	2,1	2,1	5	255	205	245,9	–	190	203	209	270	–	–	2,1	2,1
	4	4	4,7	289	217	–	230,2	197	–	–	303	292	286	3	3
	4	4	4,7	289	217	278,6	–	197	214	221	303	–	–	3	3
	4	4	7,2	291	215	280	–	197	214	221	303	–	–	3	3
	4	4	6,1	335	231	314,2	–	197	228	234	363	–	–	3	3
	4	4	10,5	339	227	316,6	–	197	225	229	363	–	–	3	3

Cylindrical roller bearings with cage

Non-locating bearings

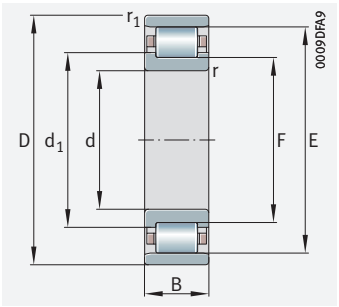

N

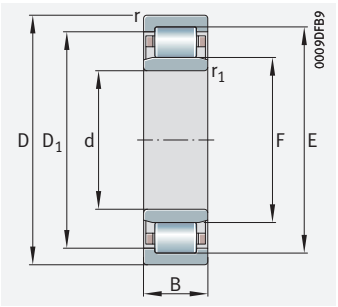

NU

d = 190 – 280 mm

Main dimensions			Basic load ratings		Fatigue limit load	Limiting speed	Speed rating	Mass	Designation
d	D	B	dyn. C_r	stat. C_{0r}	C_{ur}	n_G	$n_{\vartheta r}$	m	➤*429* | *1.12* ➤*430* | *1.13* X-life ➤*419*
			N	N	N	min^{-1}	min^{-1}	≈ kg	
190	290	46	435 000	550 000	66 000	3 800	2 410	10,9	**NU1038-XL-M1**
	340	55	680 000	930 000	112 000	3 050	1 720	22,8	**N238-E-M1**
	340	55	680 000	930 000	83 000	3 050	1 720	22,8	**NU238-E-M1**
	340	92	1 090 000	1 650 000	206 000	3 000	1 290	37,1	**NU2238-E-M1**
	400	78	1 120 000	1 440 000	110 000	2 550	1 400	50,6	**NU338-E-TB-M1**
	400	132	1 890 000	2 650 000	295 000	2 440	1 010	83,1	**NU2338-EX-TB-M1**
200	310	51	470 000	600 000	71 000	3 550	2 310	14,1	**NU1040-XL-M1**
	360	58	750 000	1 040 000	123 000	2 900	1 600	27,2	**N240-E-M1**
	360	58	750 000	1 040 000	92 000	2 900	1 600	27,2	**NU240-E-M1**
	360	98	1 220 000	1 880 000	230 000	2 850	1 180	44,7	**NU2240-E-M1**
	420	80	1 180 000	1 520 000	116 000	2 410	1 320	57,3	**NU340-E-TB-M1**
	420	138	2 040 000	2 900 000	315 000	2 330	940	95,6	**NU2340-EX-TB-M1**
220	340	56	510 000	770 000	69 000	3 150	2 040	20,5	**NU1044-M1**
	400	65	950 000	1 330 000	106 000	2 600	1 380	38,1	**NU244-E-M1**
	400	108	1 630 000	2 370 000	255 000	2 440	1 000	61,6	**NU2244-EX-TB-M1**
	460	88	1 440 000	1 890 000	138 000	2 170	1 140	75,5	**NU344-E-TB-M1**
	460	145	2 350 000	3 350 000	350 000	2 110	830	121	**NU2344-EX-TB-M1**
240	360	56	540 000	840 000	74 000	3 000	1 850	19,9	**NU1048-M1**
	440	72	1 160 000	1 650 000	175 000	2 320	1 210	51,5	**N248-E-TB-M1**
	440	72	1 140 000	1 610 000	125 000	2 320	1 220	51,8	**NU248-E-TB-M1**
	440	120	1 850 000	2 800 000	295 000	2 250	900	82,8	**NU2248-EX-TB-M1**
	500	95	1 720 000	2 280 000	162 000	1 980	1 000	95,7	**NU348-E-TB-M1**
	500	155	2 600 000	3 750 000	380 000	1 940	750	151	**NU2348-EX-TB-M1**
260	400	65	650 000	1 010 000	90 000	2 700	1 690	29,7	**NU1052-M1**
	480	80	1 350 000	1 890 000	142 000	2 100	1 110	68,4	**NU252-E-TB-M1**
	480	130	2 180 000	3 350 000	350 000	2 060	780	109	**NU2252-E-TB-M1**
	540	102	1 910 000	2 600 000	187 000	1 840	900	121	**NU352-E-TB-M1**
	540	165	3 100 000	4 500 000	455 000	1 780	660	189	**NU2352-EX-TB-M1**
280	420	65	680 000	1 100 000	96 000	2 550	1 550	31,4	**NU1056-M1**
	500	80	1 400 000	2 020 000	150 000	2 020	1 020	72,1	**NU256-E-TB-M1**
	500	130	2 270 000	3 600 000	370 000	1 980	720	114	**NU2256-E-TB-M1**
	580	108	2 180 000	3 050 000	205 000	1 700	790	147	**NU356-E-TB-M1**
	580	175	3 500 000	5 200 000	510 000	1 640	590	234	**NU2356-EX-TB-M1**

medias *https://www.schaeffler.de/std/1F9A*

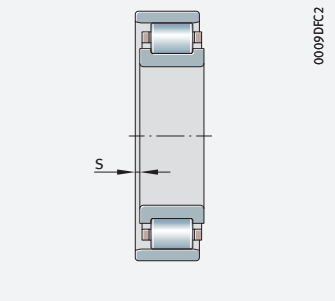

Axial displacement "s"
for N and NU

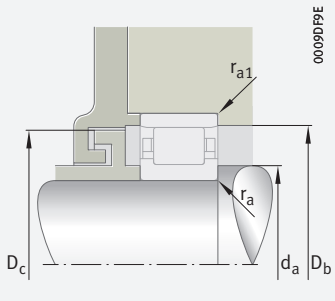

Mounting dimensions
for N

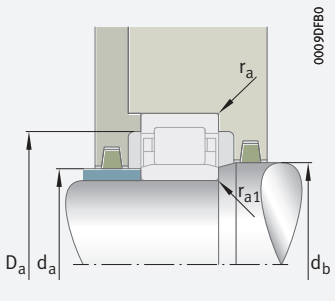

Mounting dimensions
for NU

Dimensions								Mounting dimensions							
d	r	r_1	s	E	F	D_1	d_1	d_a		d_b	D_a	D_b	D_c	r_a	r_{a1}
	min.	min.				≈	≈	min.	max.	min.	max.	min.	max.	max.	max.
190	2,1	2,1	5	265	215	255,9	–	200	213	219	280	–	–	2,1	2,1
	4	4	4,7	306	230	–	244	207	–	–	323	309	303	3	3
	4	4	4,7	306	230	295	–	207	227	234	323	–	–	3	3
	4	4	8	308	228	296,4	–	207	227	234	323	–	–	3	3
	5	5	6,3	353	245	331,4	–	210	242	248	380	–	–	4	4
	5	5	11	360	240	336	–	210	237,8	242,2	380	–	–	4	4
200	2,1	2,1	8,3	281	229	271,5	–	210	226	233	300	–	–	2,1	2,1
	4	4	4,8	323	243	–	257,6	217	–	–	343	326	320	3	3
	4	4	4,8	323	243	311,5	–	217	240	247	343	–	–	3	3
	4	4	8,2	325	241	312,9	–	217	240	247	343	–	–	3	3
	5	5	6,3	370	258	347,6	–	220	255	261	400	–	–	4	4
	5	5	11,3	377	253	352,2	–	220	250,7	255,3	400	–	–	4	4
220	3	3	6,2	310	250	298,9	–	232	248	254	328	–	–	2,5	2,5
	4	4	5,5	358	268	344,9	–	237	265	271	383	–	–	3	3
	4	4	8,4	367	259	345,4	–	237	256,7	261,3	383	–	–	3	3
	5	5	7	406	282	381,2	–	240	279	285	440	–	–	4	4
	5	5	11,9	413	277	385,8	–	240	274,7	279,3	440	–	–	4	4
240	3	3	6,4	330	270	318,9	–	252	268	275	348	–	–	2,5	2,5
	4	4	6	393	293	–	313	257	–	–	423	396	390	3	3
	4	4	6	393	293	373	–	257	290	296	423	–	–	3	3
	4	4	10,2	399	287	376,6	–	257	284,5	289,5	423	–	–	3	3
	5	5	7,4	442	306	414,8	–	260	303	309	480	–	–	4	4
	5	5	13,3	447	303	418,2	–	260	300,5	305,5	480	–	–	4	4
260	4	4	7,2	364	296	351,3	–	275	292	300	385	–	–	3	3
	5	5	6,2	429	317	406,6	–	280	314	320	460	–	–	4	4
	5	5	10,5	433	313	409	–	280	310	316	460	–	–	4	4
	6	6	10	477	337	449	–	286	334,3	339,7	514	–	–	5	5
	6	6	13,7	484	324	452	–	286	321,3	326,7	514	–	–	5	5
280	4	4	7,2	384	316	371,3	–	295	312	321	405	–	–	3	3
	5	5	6,3	449	337	426,6	–	300	334	340	480	–	–	4	4
	5	5	10,5	453	333	429	–	300	330	336	480	–	–	4	4
	6	6	8,7	512	362	482	–	306	359	366	554	–	–	5	5
	6	6	13,8	521	351	487	–	306	348	354	554	–	–	5	5

Cylindrical roller bearings with cage

Non-locating bearings

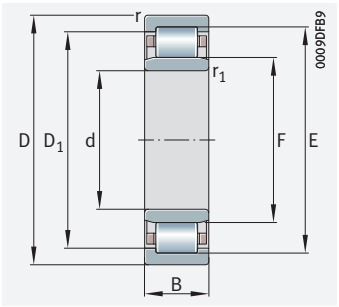

NU

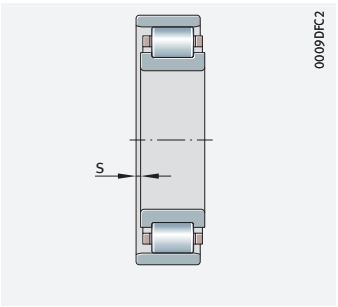

Axial displacement "s" for NU

d = 300 – 710 mm

Main dimensions			Basic load ratings		Fatigue limit load	Limiting speed	Speed rating	Mass	Designation
d	D	B	dyn. C_r	stat. C_{0r}	C_{ur}	n_G	$n_{\vartheta r}$	m	➤*429* | *1.12* ➤*430* | *1.13*
			N	N	N	min^{-1}	min^{-1}	≈ kg	
300	460	74	900 000	1 430 000	122 000	2 290	1 390	44,6	**NU1060-M1**
	540	85	1 600 000	2 330 000	170 000	1 860	920	90,4	**NU260-E-TB-M1**
	540	140	2 700 000	4 100 000	415 000	1 780	650	143	**NU2260-EX-TB-M1**
320	480	74	910 000	1 490 000	125 000	2 200	1 300	46,9	**NU1064-M1**
	580	92	1 810 000	2 700 000	190 000	1 730	830	113	**NU264-EX-TB-M1**
	580	150	3 150 000	4 900 000	470 000	1 650	570	180	**NU2264-EX-TB-M1**
340	520	82	1 120 000	1 830 000	150 000	2 010	1 190	63,2	**NU1068-M1**
360	540	82	1 150 000	1 910 000	155 000	1 940	1 110	65,9	**NU1072-M1**
	650	170	3 600 000	5 800 000	540 000	1 490	510	254	**NU2272-E-TB-M1**
380	560	82	1 170 000	1 990 000	160 000	1 880	1 050	69,1	**NU1076-M1**
	680	175	4 050 000	6 700 000	620 000	1 420	450	288	**NU2276-E-TB-M1**
400	600	90	1 380 000	2 330 000	178 000	1 730	980	90,1	**NU1080-TB-M1**
420	620	90	1 410 000	2 430 000	185 000	1 680	920	92,9	**NU1084-TB-M1**
440	650	94	1 560 000	2 750 000	202 000	1 600	860	107	**NU1088-TB-M1**
460	620	74	1 020 000	1 970 000	157 000	1 770	860	63,1	**NU1992-M1**
	680	100	1 680 000	2 950 000	217 000	1 530	830	125	**NU1092-TB-M1**
480	650	78	1 150 000	2 250 000	179 000	1 680	810	74,2	**NU1996-M1**
	700	100	1 720 000	3 100 000	225 000	1 490	780	129	**NU1096-TB-M1**
500	720	100	1 750 000	3 200 000	232 000	1 450	750	133	**NU10/500-TB-M1**
560	750	85	1 460 000	2 950 000	227 000	1 450	660	105	**NU19/560-M1**
	820	115	2 700 000	5 100 000	335 000	1 250	590	213	**NU10/560-TB-M1**
600	800	90	1 960 000	3 900 000	275 000	1 300	570	125,3	**NU19/600-E-TB-M1**
670	900	103	2 040 000	4 250 000	295 000	1 190	530	186	**NU19/670-TB-M1**
710	950	106	2 230 000	4 750 000	330 000	1 130	485	213	**NU19/710-TB-M1**

medias *https://www.schaeffler.de/std/1F9A*

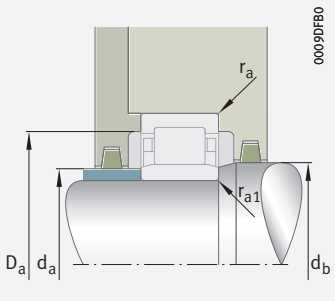

Mounting dimensions for NU

Dimensions							Mounting dimensions					
d	r	r_1	s	E	F	D_1	d_a		d_b	D_a	r_a	r_{a1}
	min.	min.				≈	min.	max.	min.	max.	max.	max.
300	4	4	7,9	420	340	405,2	315	336	345	445	3	3
	5	5	6,9	484	364	460	320	359	367	520	4	4
	5	5	12,2	495	355	467	320	352	358	520	4	4
320	4	4	11,5	440	360	425,1	335	356	365	465	3	3
	5	5	7,5	520	392	494,4	340	388,5	395,5	560	4	4
	5	5	11,9	530	380	500	340	376,5	383,5	560	4	4
340	5	5	12,5	475	385	458,2	357	381	390	503	4	4
360	5	5	12,5	495	405	478,1	377	400	410	523	4	4
	6	6	15	588	428	556	386	424	432	624	5	5
380	5	5	9	515	425	498,1	397	420	430	543	4	4
	6	6	13,8	615	451	582,2	406	446	456	654	5	5
400	5	5	9,5	550	450	530	417	445	455	583	4	4
420	5	5	9,6	570	470	550	437	465	475	603	4	4
440	6	6	9,8	597	493	576,2	463	488	498	627	5	5
460	4	4	8,4	578	502	562,8	475	498	506	605	3	3
	6	6	11,2	624	516	602,4	483	510	522	657	5	5
480	5	5	6,8	605	525	589	497	521	529	633	4	4
	6	6	10,7	644	536	622,4	503	530	542	677	5	5
500	6	6	10,7	664	556	642,4	523	550	562	697	5	5
560	5	5	9,6	700	610	682	577	606	614	733	4	4
	6	6	9,8	754	626	728,4	583	620	632	797	5	5
600	5	5	9,9	748	652	735,4	617	647	657	783	4	4
670	6	6	11,3	839	731	817	693	726	736	877	5	5
710	6	6	9,3	886	774	863,6	733	769	779	927	5	5

Cylindrical roller bearings with cage

Semi-locating bearings, locating bearings

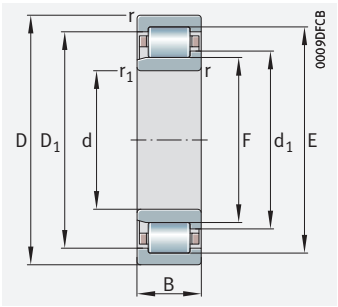

NJ
Semi-locating bearing

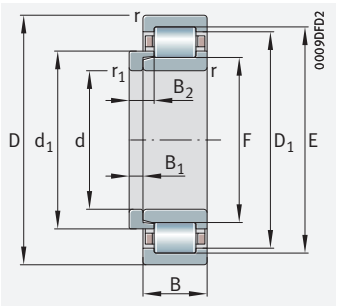

NJ and HJ
Locating bearings

d = 15 – 20 mm

Main dimensions			Basic load ratings		Fatigue limit load	Limiting speed	Speed rating	Mass m		Designation ➤429|1.12 ➤430|1.13 X-life ➤419	
d	D	B	dyn. C_r	stat. C_{0r}	C_{ur}	n_G	$n_{\vartheta r}$	Bearing	L-section ring	Bearing	L-section ring
			N	N	N	min^{-1}	min^{-1}	≈ kg	≈ kg		
15	35	11	15 100	10 400	1 620	27 000	17 900	0,049	–	**NJ202-E-XL-TVP2**	–
	35	11	15 100	10 400	1 620	27 000	17 900	0,049	0,005	**NJ202-E-XL-TVP2**	**HJ202-E**
17	40	12	20 800	14 600	2 220	22 900	15 300	0,07	–	**NJ203-E-XL-TVP2**	–
	40	12	20 800	14 600	2 220	22 900	15 300	0,07	0,008	**NJ203-E-XL-TVP2**	**HJ203-E**
	40	12	20 800	14 600	2 230	22 900	15 300	0,073	–	**NUP203-E-XL-TVP2**	**–**
	40	16	28 500	21 900	3 550	22 900	13 200	0,053	–	**NJ2203-E-XL-TVP2**	–
	40	16	28 500	21 900	3 550	22 900	13 200	0,053	0,008	**NJ2203-E-XL-TVP2**	**HJ2203-E**
	40	16	28 500	21 900	3 550	22 900	13 200	0,055	–	**NUP2203-E-XL-TVP2**	**–**
	47	14	30 000	21 200	3 400	19 600	13 500	0,124	–	**NJ303-E-XL-TVP2**	–
	47	14	30 000	21 200	3 400	19 600	13 500	0,124	0,014	**NJ303-E-XL-TVP2**	**HJ303-E**
	47	14	30 000	21 200	3 400	19 600	13 500	0,142	–	**NUP303-E-XL-TVP2**	**–**
20	47	14	32 500	24 700	3 950	19 200	12 800	0,117	–	**NJ204-E-XL-TVP2**	–
	47	14	32 500	24 700	3 950	19 200	12 800	0,117	0,011	**NJ204-E-XL-TVP2**	**HJ204-E**
	47	14	32 500	24 700	3 950	19 200	12 800	0,119	–	**NUP204-E-XL-TVP2**	**–**
	47	18	38 500	31 000	5 200	19 200	11 100	0,15	–	**NJ2204-E-XL-TVP2**	–
	47	18	38 500	31 000	5 200	19 200	11 100	0,15	0,012	**NJ2204-E-XL-TVP2**	**HJ2204-E**
	47	18	38 500	31 000	5 200	19 200	11 100	0,154	–	**NUP2204-E-XL-TVP2**	**–**
	52	15	37 500	27 000	3 950	17 200	11 900	0,156	–	**NJ304-E-XL-TVP2**	–
	52	15	37 500	27 000	3 950	17 200	11 900	0,156	0,017	**NJ304-E-XL-TVP2**	**HJ304-E**
	52	15	37 500	27 000	3 950	17 200	11 900	0,16	–	**NUP304-E-XL-TVP2**	**–**
	52	21	49 500	39 000	6 300	17 200	9 700	0,219	–	**NJ2304-E-XL-TVP2**	–
	52	21	49 500	39 000	6 300	17 200	9 700	0,219	0,019	**NJ2304-E-XL-TVP2**	**HJ2304-E**
	52	21	49 500	39 000	6 300	17 200	9 700	0,224	–	**NUP2304-E-XL-TVP2**	**–**

medias *https://www.schaeffler.de/std/1F9A*

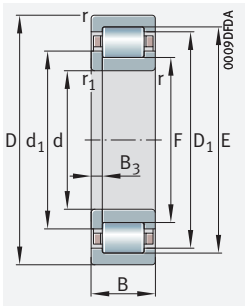

NUP
Locating bearing

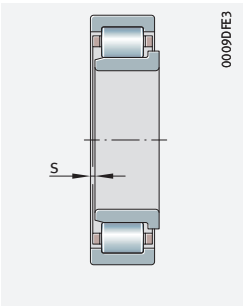

Axial displacement “s”
for NJ

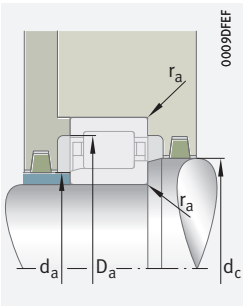

Mounting dimensions
for NJ

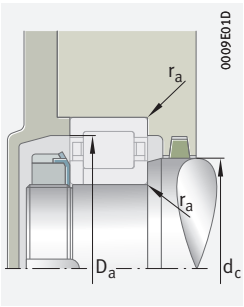

Mounting dimensions
for NUP

Dimensions											Mounting dimensions				
d	r	r_1	s	E	F	D_1	d_1	B_1	B_2	B_3	d_a		d_c	D_a	r_a
	min.	min.				≈	≈				min.[1]	max.	min.	max.[1]	max.
15	0,6	0,3	1,6	30,3	19,3	28	21,6	–	–	–	17,4	18,5	22	32,6	0,6
	0,6	0,3	–	30,3	19,3	28	21,6	2,5	5	–	17,4	–	22	32,6	0,6
17	0,6	0,3	1,2	35,1	22,1	32,5	24,7	–	–	–	21	21,5	28	36	0,6
	0,6	0,3	–	35,1	22,1	32,5	24,7	3	5,5	–	21	–	28	36	0,6
	0,6	0,3	–	35,1	22,1	32,5	24,7	–	–	2,5	21	–	28	36	0,6
	0,6	0,3	1,7	35,1	22,1	32,5	24,7	–	–	–	21	21,5	26	36	0,6
	0,6	0,3	–	35,1	22,1	32,5	24,7	3	6	–	21	–	26	36	0,6
	0,6	0,6	–	35,1	22,1	32,5	24,7	–	–	3	21	–	26	36	0,6
	1	0,6	1,2	40,2	24,2	37,1	27,6	–	–	–	21,2	23,5	28	42,8	1
	1	0,6	–	40,2	24,2	37,1	27,6	4	6,5	–	21,2	–	28	42,8	1
	1	0,6	–	40,2	24,2	37,1	27,6	–	–	2,5	21,2	–	28	42,8	1
20	1	0,6	1	41,5	26,5	38,8	29,7	–	–	–	24	26	32	41	1
	1	0,6	–	41,5	26,5	38,8	29,7	3	5,5	–	24	–	32	41	1
	1	0,6	–	41,5	26,5	38,8	29,7	–	–	2,5	24	–	32	41	1
	1	0,6	1,8	41,5	26,5	38,8	29,7	–	–	–	24	26	32	41	1
	1	0,6	–	41,5	26,5	38,8	29,7	3	6,5	–	24	–	32	41	1
	1	0,6	–	41,5	26,5	38,8	29,7	–	–	3,5	24	–	32	41	1
	1,1	0,6	1	45,5	27,5	42,4	31,3	–	–	–	24	27	33	45	1
	1,1	0,6	–	45,5	27,5	42,4	31,3	4	6,5	–	24	–	33	45	1
	1,1	0,6	–	45,5	27,5	42,4	31,3	–	–	2,5	24	–	33	45	1
	1,1	0,6	1,9	45,5	27,5	42,4	31,3	–	–	–	24	27	33	45	1
	1,1	0,6	–	45,5	27,5	42,4	31,3	4	7,5	–	24	–	33	45	1
	1,1	0,6	–	45,5	27,5	42,4	31,3	–	–	3,5	24	–	33	45	1

[1] Under axial load, observe the dimensions D_1 and d_1.

Cylindrical roller bearings with cage

Semi-locating bearings, locating bearings

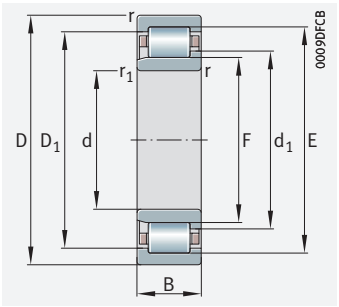

NJ
Semi-locating bearing

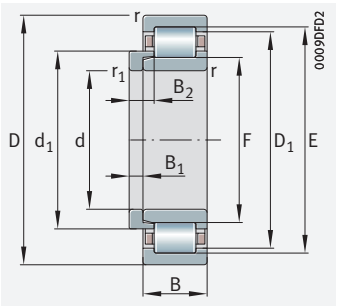

NJ and HJ
Locating bearings

d = 25 – 30 mm

Main dimensions			Basic load ratings		Fatigue limit load	Limiting speed	Speed rating	Mass m		Designation ➤429|1.12 ➤430|1.13 X-life ➤419	
d	D	B	dyn. C_r	stat. C_{0r}	C_{ur}	n_G	$n_{\vartheta r}$	Bearing	L-section ring	Bearing	L-section ring
			N	N	N	min^{-1}	min^{-1}	≈ kg	≈ kg		
25	52	15	34 500	27 500	4 450	17 200	11 600	0,14	–	**NJ205-E-XL-TVP2**	–
	52	15	34 500	27 500	4 450	17 200	11 600	0,14	0,014	**NJ205-E-XL-TVP2**	**HJ205-E**
	52	15	34 500	27 500	4 450	17 200	11 600	0,145	–	**NUP205-E-XL-TVP2**	**–**
	52	18	41 500	34 500	5 800	17 200	9 600	0,17	–	**NJ2205-E-XL-TVP2**	–
	52	18	41 500	34 500	5 800	17 200	9 600	0,17	0,015	**NJ2205-E-XL-TVP2**	**HJ2205-E**
	52	18	41 500	34 500	5 800	17 200	9 600	0,174	–	**NUP2205-E-XL-TVP2**	**–**
	62	17	49 000	37 500	5 700	14 400	10 100	0,25	–	**NJ305-E-XL-TVP2**	–
	62	17	49 000	37 500	5 700	14 400	10 100	0,25	0,025	**NJ305-E-XL-TVP2**	**HJ305-E**
	62	17	49 000	37 500	5 700	14 400	10 100	0,256	–	**NUP305-E-XL-TVP2**	**–**
	62	24	66 000	54 000	9 300	14 400	8 300	0,356	–	**NJ2305-E-XL-TVP2**	–
	62	24	66 000	54 000	9 300	14 400	8 300	0,356	0,027	**NJ2305-E-XL-TVP2**	**HJ2305-E**
	62	24	67 000	56 000	9 300	14 400	8 200	0,364	–	**NUP2305-E-XL-TVP2**	**–**
30	62	16	46 000	37 500	5 500	14 200	9 600	0,213	–	**NJ206-E-XL-TVP2**	–
	62	16	46 000	37 500	5 500	14 200	9 600	0,213	0,024	**NJ206-E-XL-TVP2**	**HJ206-E**
	62	16	46 000	37 500	5 500	14 200	9 600	0,219	–	**NUP206-E-XL-TVP2**	**–**
	62	20	58 000	50 000	7 900	14 200	8 000	0,261	–	**NJ2206-E-XL-TVP2**	–
	62	20	58 000	50 000	7 900	14 200	8 000	0,261	0,025	**NJ2206-E-XL-TVP2**	**HJ2206-E**
	62	20	58 000	50 000	8 000	14 200	8 000	0,268	–	**NUP2206-E-XL-TVP2**	**–**
	72	19	61 000	48 000	7 800	12 400	8 900	0,376	–	**NJ306-E-XL-TVP2**	–
	72	19	61 000	48 000	7 800	12 400	8 900	0,376	0,042	**NJ306-E-XL-TVP2**	**HJ306-E**
	72	19	61 000	48 000	7 900	12 400	8 900	0,385	–	**NUP306-E-XL-TVP2**	**–**
	72	27	86 000	75 000	13 300	12 400	7 200	0,54	–	**NJ2306-E-XL-TVP2**	–
	72	27	86 000	75 000	13 300	12 400	7 200	0,54	0,044	**NJ2306-E-XL-TVP2**	**HJ2306-E**
	72	27	86 000	75 000	13 300	12 400	7 200	0,551	–	**NUP2306-E-XL-TVP2**	**–**
	90	23	84 000	65 000	11 200	13 400	8 100	0,872	–	**NJ406-XL-M1**	–
	90	23	84 000	65 000	11 200	13 400	8 100	0,872	0,082	**NJ406-XL-M1**	**HJ406**

medias *https://www.schaeffler.de/std/1F9A*

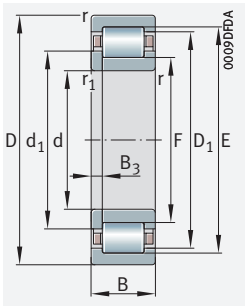

NUP
Locating bearing

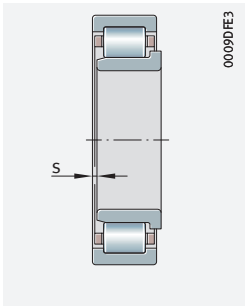

Axial displacement "s"
for NJ

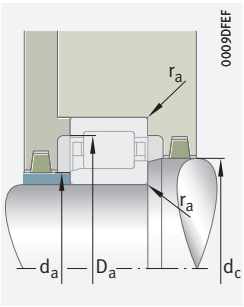

Mounting dimensions
for NJ

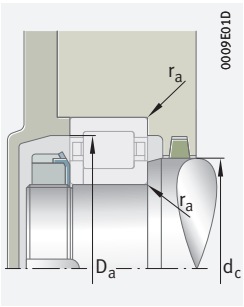

Mounting dimensions
for NUP

Dimensions											Mounting dimensions				
d	r	r_1	s	E	F	D_1	d_1	B_1	B_2	B_3	d_a		d_c	D_a	r_a
	min.	min.				≈	≈				min.[1]	max.	min.	max.[1]	max.
25	1	0,6	1,2	46,5	31,5	43,8	34,7	–	–	–	29	31	37	46	1
	1	0,6	–	46,5	31,5	43,8	34,7	3	6	–	29	–	37	46	1
	1	0,6	–	46,5	31,5	43,8	34,7	–	–	3	29	–	37	46	1
	1	0,6	1,7	46,5	31,5	43,8	34,7	–	–	–	29	31	37	46	1
	1	0,6	–	46,5	31,5	43,8	34,7	3	6,5	–	29	–	37	46	1
	1	0,6	–	46,5	31,5	43,8	34,7	–	–	3,5	29	–	37	46	1
	1,1	1,1	1,5	54	34	50,7	38,1	–	–	–	32	33	40	55	1
	1,1	1,1	–	54	34	50,7	38,1	4	7	–	32	–	40	55	1
	1,1	1,1	–	54	34	50,7	38,1	–	–	3	32	–	40	55	1
	1,1	1,1	1,9	54	34	50,7	38,1	–	–	–	32	33	40	55	1
	1,1	1,1	–	54	34	50,7	38,1	4	8	–	32	–	40	55	1
	1,1	1,1	–	54	34	50,7	38,1	–	–	4	32	–	40	55	1
30	1	0,6	1,5	55,5	37,5	52,5	41,1	–	–	–	34	37	44	56	1
	1	0,6	–	55,5	37,5	52,5	41,1	4	7	–	34	–	44	56	1
	1	0,6	–	55,5	37,5	52,5	41,1	–	–	3	34	–	44	56	1
	1	0,6	1,6	55,5	37,5	52,5	41,3	–	–	–	34	37	44	56	1
	1	0,6	–	55,5	37,5	52,5	41,3	4	7,5	–	34	–	44	56	1
	1	0,6	–	55,5	37,5	52,5	41,3	–	–	3,5	34	–	44	56	1
	1,1	1,1	1,2	62,5	40,5	59,2	45	–	–	–	37	40	48	65	1
	1,1	1,1	–	62,5	40,5	59,2	45	5	8,5	–	37	–	48	65	1
	1,1	1,1	–	62,5	40,5	59,2	45	–	–	3,5	37	–	48	65	1
	1,1	1,1	2,2	62,5	40,5	59,2	45	–	–	–	37	40	48	65	1
	1,1	1,1	–	62,5	40,5	59,2	45	5	9,5	–	37	–	48	65	1
	1,1	1,1	–	62,5	40,5	59,2	45	–	–	4,5	37	–	48	65	1
	1,5	1,5	2,3	73	45	68,4	50,3	–	–	–	41	44	52	79	1,5
	1,5	1,5	–	73	45	68,4	50,3	7	11,5	–	41	–	52	79	1,5

[1] Under axial load, observe the dimensions D_1 and d_1.

Cylindrical roller bearings with cage

Semi-locating bearings, locating bearings

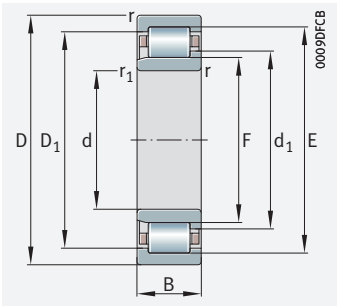

NJ
Semi-locating bearing

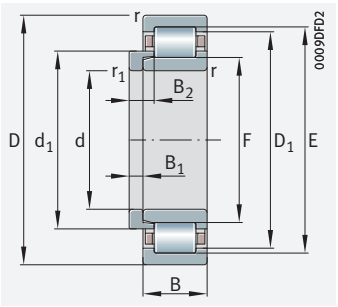

NJ and HJ
Locating bearings

d = 35 – 40 mm

Main dimensions			Basic load ratings		Fatigue limit load	Limiting speed	Speed rating	Mass m		Designation ➤429|1.12 ➤430|1.13 X-life ➤419	
d	D	B	dyn. C_r N	stat. C_{0r} N	C_{ur} N	n_G min^{-1}	$n_{\vartheta r}$ min^{-1}	Bearing ≈ kg	L-section ring ≈ kg	Bearing	L-section ring
35	72	17	59 000	50 000	7 700	12 300	8 100	0,309	–	**NJ207-E-XL-TVP2**	–
	72	17	59 000	50 000	7 700	12 300	8 100	0,309	0,032	**NJ207-E-XL-TVP2**	**HJ207-E**
	72	17	59 000	50 000	7 800	12 300	8 100	0,317	–	**NUP207-E-XL-TVP2**	**–**
	72	23	73 000	65 000	10 700	12 300	7 200	0,416	–	**NJ2207-E-XL-TVP2**	–
	72	23	73 000	65 000	10 700	12 300	7 200	0,416	0,035	**NJ2207-E-XL-TVP2**	**HJ2207-E**
	72	23	73 000	65 000	10 700	12 300	7 200	0,427	–	**NUP2207-E-XL-TVP2**	**–**
	80	21	76 000	63 000	10 800	10 900	7 900	0,496	–	**NJ307-E-XL-TVP2**	–
	80	21	76 000	63 000	10 800	10 900	7 900	0,496	0,06	**NJ307-E-XL-TVP2**	**HJ307-E**
	80	21	76 000	63 000	10 800	10 900	7 900	0,506	–	**NUP307-E-XL-TVP2**	**–**
	80	31	108 000	98 000	17 900	10 900	6 600	0,736	–	**NJ2307-E-XL-TVP2**	–
	80	31	108 000	98 000	17 900	10 900	6 600	0,736	0,063	**NJ2307-E-XL-TVP2**	**HJ2307-E**
	80	31	108 000	98 000	17 900	10 900	6 600	0,751	–	**NUP2307-E-XL-TVP2**	**–**
	100	25	103 000	83 000	14 500	11 800	7 000	1,16	–	**NJ407-XL-M1**	–
	100	25	103 000	83 000	14 500	11 800	7 000	1,16	0,127	**NJ407-XL-M1**	**HJ407**
40	80	18	63 000	53 000	8 500	10 900	7 500	0,389	–	**NJ208-E-XL-TVP2**	–
	80	18	63 000	53 000	8 500	10 900	7 500	0,389	0,049	**NJ208-E-XL-TVP2**	**HJ208-E**
	80	18	63 000	53 000	8 500	10 900	7 500	0,399	–	**NUP208-E-XL-TVP2**	**–**
	80	23	83 000	75 000	12 900	10 900	6 300	0,504	–	**NJ2208-E-XL-TVP2**	–
	80	23	83 000	75 000	12 900	10 900	6 300	0,504	0,05	**NJ2208-E-XL-TVP2**	**HJ2208-E**
	80	23	83 000	75 000	12 900	10 900	6 300	0,518	–	**NUP2208-E-XL-TVP2**	**–**
	90	23	96 000	79 000	13 800	9 500	7 100	0,674	–	**NJ308-E-XL-TVP2**	–
	90	23	96 000	79 000	13 800	9 500	7 100	0,674	0,087	**NJ308-E-XL-TVP2**	**HJ308-E**
	90	23	96 000	79 000	13 900	9 500	7 100	0,688	–	**NUP308-E-XL-TVP2**	**–**
	90	33	132 000	119 000	21 900	9 500	5 800	0,978	–	**NJ2308-E-XL-TVP2**	–
	90	33	132 000	119 000	21 900	9 500	5 800	0,978	0,091	**NJ2308-E-XL-TVP2**	**HJ2308-E**
	90	33	132 000	119 000	21 900	9 500	5 800	0,999	–	**NUP2308-E-XL-TVP2**	**–**
	110	27	119 000	95 000	17 100	10 500	6 500	1,5	–	**NJ408-XL-M1**	–
	110	27	119 000	95 000	17 100	10 500	6 500	1,5	0,148	**NJ408-XL-M1**	**HJ408**

medias *https://www.schaeffler.de/std/1F9A*

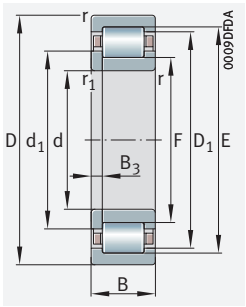

NUP
Locating bearing

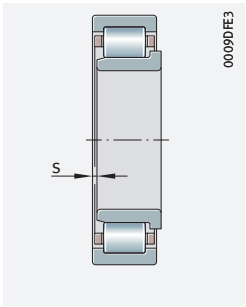

Axial displacement “s”
for NJ

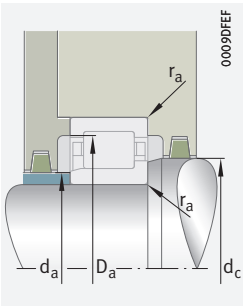

Mounting dimensions
for NJ

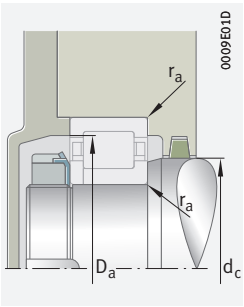

Mounting dimensions
for NUP

Dimensions											Mounting dimensions				
d	r	r_1	s	E	F	D_1	d_1	B_1	B_2	B_3	d_a		d_c	D_a	r_a
	min.	min.				≈	≈				min.[1]	max.	min.	max.[1]	max.
35	1,1	0,6	0,7	64	44	61	48	–	–	–	39	43	50	65	1
	1,1	0,6	–	64	44	61	48	4	7	–	39	–	50	65	1
	1,1	0,6	–	64	44	61	48	–	–	3	39	–	50	65	1
	1,1	0,6	2,2	64	44	61	48	–	–	–	39	43	50	65	1
	1,1	0,6	–	64	44	61	48	4	8,5	–	39	–	50	65	1
	1,1	0,6	–	64	44	61	48	–	–	4,5	39	–	50	65	1
	1,5	1,1	0,6	70,2	46,2	66,6	51	–	–	–	42	45	53	71	1,5
	1,5	1,1	–	70,2	46,2	66,6	51	6	9,5	–	42	–	53	71	1,5
	1,5	1,1	–	70,2	46,2	66,6	51	–	–	3,5	42	–	53	71	1,5
	1,5	1,1	2,1	70,2	46,2	66,6	51	–	–	–	42	45	53	71	1,5
	1,5	1,1	–	70,2	46,2	66,6	51	6	11	–	42	–	53	71	1,5
	1,5	1,5	–	70,2	46,2	66,6	51	–	–	5	42	–	53	71	1,5
	1,5	1,5	2,6	83	53	78,2	58,8	–	–	–	46	52	61	89	1,5
	1,5	1,5	–	83	53	78,2	58,8	8	13	–	46	–	61	89	1,5
40	1,1	1,1	1	71,5	49,5	68,3	54	–	–	–	47	49	56	73	1
	1,1	1,1	–	71,5	49,5	68,3	54	5	8,5	–	47	–	56	73	1
	1,1	1,1	–	71,5	49,5	68,3	54	–	–	3,5	47	–	56	73	1
	1,1	1,1	1,5	71,5	49,5	68,3	54	–	–	–	47	49	56	73	1
	1,1	1,1	–	71,5	49,5	68,3	54	5	9	–	47	–	56	73	1
	1,1	1,1	–	71,5	49,5	68,3	54	–	–	4	47	–	56	73	1
	1,5	1,5	1,3	80	52	75,9	57,6	–	–	–	49	51	60	81	1,5
	1,5	1,5	–	80	52	75,9	57,6	7	11	–	49	–	60	81	1,5
	1,5	1,5	–	80	52	75,9	57,6	–	–	4	49	–	60	81	1,5
	1,5	1,5	2,7	80	52	75,9	57,6	–	–	–	49	51	60	81	1,5
	1,5	1,5	–	80	52	75,9	57,6	7	12,5	–	49	–	60	81	1,5
	1,5	1,5	–	80	52	75,9	57,6	–	–	5,5	49	–	60	81	1,5
	2	2	2,8	92	58	86,4	64,6	–	–	–	53	57	67	97	2
	2	2	–	92	58	86,4	64,6	8	13	–	53	–	67	97	2

[1] Under axial load, observe the dimensions D_1 and d_1.

Cylindrical roller bearings with cage

Semi-locating bearings, locating bearings

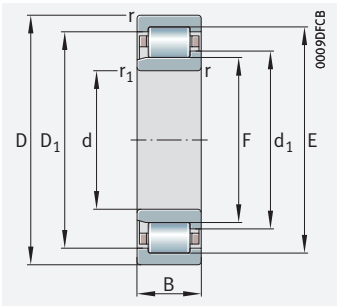

NJ
Semi-locating bearing

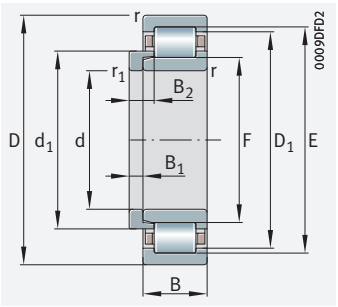

NJ and HJ
Locating bearings

d = 45 – 50 mm

Main dimensions			Basic load ratings		Fatigue limit load	Limiting speed	Speed rating	Mass m		Designation ➤429|1.12 ➤430|1.13 X-life ➤419	
d	D	B	dyn. C_r N	stat. C_{0r} N	C_{ur} N	n_G min^{-1}	$n_{\vartheta r}$ min^{-1}	Bearing ≈ kg	L-section ring ≈ kg	Bearing	L-section ring
45	85	19	72 000	63 000	10 500	10 200	7 000	0,445	–	**NJ209-E-XL-TVP2**	–
	85	19	72 000	63 000	10 500	10 200	7 000	0,445	0,054	**NJ209-E-XL-TVP2**	**HJ209-E**
	85	19	72 000	63 000	10 500	10 200	7 000	0,457	–	**NUP209-E-XL-TVP2**	**–**
	85	23	87 000	82 000	14 100	10 200	5 800	0,544	–	**NJ2209-E-XL-TVP2**	–
	85	23	87 000	82 000	14 100	10 200	5 800	0,544	0,055	**NJ2209-E-XL-TVP2**	**HJ2209-E**
	85	23	87 000	82 000	14 100	10 200	5 800	0,559	–	**NUP2209-E-XL-TVP2**	**–**
	100	25	116 000	99 000	17 500	8 500	6 400	0,913	–	**NJ309-E-XL-TVP2**	–
	100	25	116 000	99 000	17 500	8 500	6 400	0,913	0,109	**NJ309-E-XL-TVP2**	**HJ309-E**
	100	25	116 000	99 000	17 600	8 500	6 400	0,937	–	**NUP309-E-XL-TVP2**	**–**
	100	36	163 000	154 000	28 500	8 500	5 200	1,33	–	**NJ2309-E-XL-TVP2**	–
	100	36	163 000	154 000	28 500	8 500	5 200	1,33	0,115	**NJ2309-E-XL-TVP2**	**HJ2309-E**
	100	36	163 000	154 000	28 500	8 500	5 200	1,36	–	**NUP2309-E-XL-TVP2**	**–**
	120	29	143 000	119 000	21 700	9 600	5 900	1,9	–	**NJ409-XL-M1**	–
	120	29	143 000	119 000	21 700	9 600	5 900	1,9	0,181	**NJ409-XL-M1**	**HJ409**
50	90	20	75 000	69 000	11 300	9 700	6 600	0,503	–	**NJ210-E-XL-TVP2**	–
	90	20	75 000	69 000	11 300	9 700	6 600	0,503	0,06	**NJ210-E-XL-TVP2**	**HJ210-E**
	90	20	75 000	69 000	11 400	9 700	6 600	0,517	–	**NUP210-E-XL-TVP2**	**–**
	90	23	92 000	88 000	15 300	9 700	5 300	0,586	–	**NJ2210-E-XL-TVP2**	–
	90	23	92 000	88 000	15 300	9 700	5 300	0,586	0,06	**NJ2210-E-XL-TVP2**	**HJ210-E**
	90	23	92 000	88 000	15 300	9 700	5 300	0,597	–	**NUP2210-E-XL-TVP2**	**–**
	110	27	131 000	114 000	20 400	7 800	6 000	1,19	–	**NJ310-E-XL-TVP2**	–
	110	27	131 000	114 000	20 400	7 800	6 000	1,19	0,149	**NJ310-E-XL-TVP2**	**HJ310-E**
	110	27	131 000	114 000	20 500	7 800	6 000	1,21	–	**NUP310-E-XL-TVP2**	**–**
	110	40	193 000	187 000	35 500	7 800	4 900	1,77	–	**NJ2310-E-XL-TVP2**	–
	110	40	193 000	187 000	35 500	7 800	4 900	1,77	0,156	**NJ2310-E-XL-TVP2**	**HJ2310-E**
	110	40	193 000	187 000	35 500	7 800	4 900	1,82	–	**NUP2310-E-XL-TVP2**	**–**
	130	31	175 000	148 000	27 500	8 600	5 300	2,36	–	**NJ410-XL-M1**	–
	130	31	175 000	148 000	27 500	8 600	5 300	2,36	0,238	**NJ410-XL-M1**	**HJ410**

medias *https://www.schaeffler.de/std/1F9A*

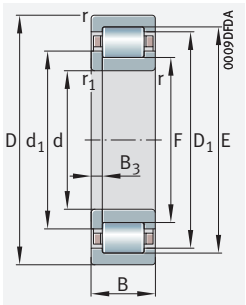

NUP
Locating bearing

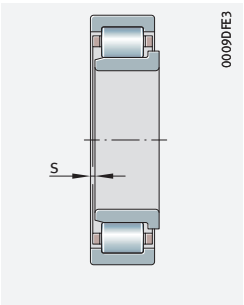

Axial displacement "s"
for NJ

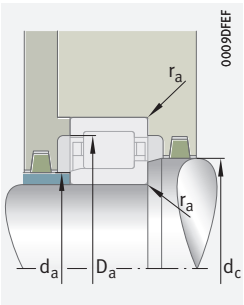

Mounting dimensions
for NJ

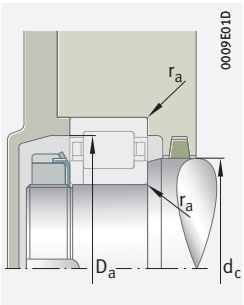

Mounting dimensions
for NUP

Dimensions											Mounting dimensions				
d	r	r_1	s	E	F	D_1	d_1	B_1	B_2	B_3	d_a		d_c	D_a	r_a
	min.	min.				≈	≈				min.[1]	max.	min.	max.[1]	max.
45	1,1	1,1	1,9	76,5	54,5	73,3	59	–	–	–	52	54	61	78	1
	1,1	1,1	–	76,5	54,5	73,3	59	5	8,5	–	52	–	61	78	1
	1,1	1,1	–	76,5	54,5	73,3	59	–	–	3,5	52	–	61	78	1
	1,1	1,1	1,5	76,5	54,5	73,3	59	–	–	–	52	54	61	78	1
	1,1	1,1	–	76,5	54,5	73,3	59	5	9	–	52	–	61	78	1
	1,1	1,1	–	76,5	54,5	73,3	59	–	–	4	52	–	61	78	1
	1,5	1,5	1	88,5	58,5	84,1	64,4	–	–	–	54	57	66	91	1,5
	1,5	1,5	–	88,5	58,5	84,1	64,4	7	11,5	–	54	–	66	91	1,5
	1,5	1,5	–	88,5	58,5	84,1	64,4	–	–	4,5	54	–	66	91	1,5
	1,5	1,5	2,5	88,5	58,5	84,1	64,4	–	–	–	54	57	66	91	1,5
	1,5	1,5	–	88,5	58,5	84,1	64,4	7	13	–	54	–	66	91	1,5
	1,5	1,5	–	88,5	58,5	84,1	64,4	–	–	6	54	–	66	91	1,5
	2	2	2,9	100,5	64,5	94,6	71,6	–	–	–	58	63	74	107	2
	2	2	–	100,5	64,5	94,6	71,6	8	13,5	–	58	–	74	107	2
50	1,1	1,1	1,3	81,5	59,5	78,3	64	–	–	–	57	58	67	83	1
	1,1	1,1	–	81,5	59,5	78,3	64	5	9	–	57	–	67	83	1
	1,1	1,1	–	81,5	59,5	78,3	64	–	–	4	57	–	67	83	1
	1,1	1,1	1,3	81,5	59,5	78,3	64	–	–	–	57	58	67	83	1
	1,1	1,1	–	81,5	59,5	78,3	64	5	9	–	57	–	67	83	1
	1,1	1,1	–	81,5	59,5	78,3	64	–	–	4	57	–	67	83	1
	2	2	1,7	97	65	92,5	71,3	–	–	–	61	63	73	99	2
	2	2	–	97	65	92,5	71,3	8	13	–	61	–	73	99	2
	2	2	–	97	65	92,5	71,3	–	–	5	61	–	73	99	2
	2	2	4,2	97	65	92,5	71,3	–	–	–	61	63	73	99	2
	2	2	–	97	65	92,5	71,3	8	14,5	–	61	–	73	99	2
	2	2	–	97	65	92,5	71,3	–	–	6,5	61	–	73	99	2
	2,1	2,1	3	110,8	70,8	104,3	78,6	–	–	–	64	69	81	116	2
	2,1	2,1	–	110,8	70,8	104,3	78,6	9	14,5	–	64	–	81	116	2

[1] Under axial load, observe the dimensions D_1 and d_1.

Cylindrical roller bearings with cage

Semi-locating bearings, locating bearings

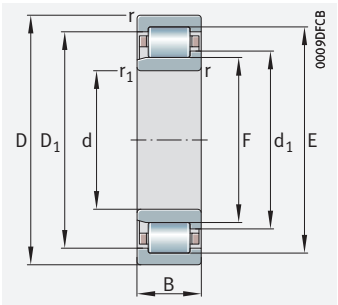

NJ
Semi-locating bearing

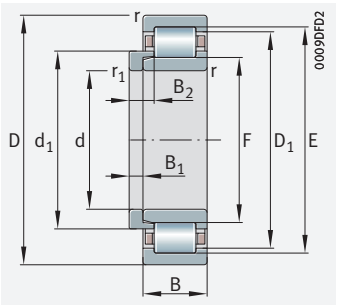

NJ and HJ
Locating bearings

d = 55 – 60 mm

Main dimensions			Basic load ratings		Fatigue limit load	Limiting speed	Speed rating	Mass m		Designation ➤429|1.12 ➤430|1.13 X-life ➤419	
d	D	B	dyn. C_r N	stat. C_{0r} N	C_{ur} N	n_G min^{-1}	$n_{\vartheta r}$ min^{-1}	Bearing ≈ kg	L-section ring ≈ kg	Bearing	L-section ring
55	100	21	99 000	95 000	16 400	8 700	5 800	0,679	–	**NJ211-E-XL-TVP2**	–
	100	21	99 000	95 000	16 400	8 700	5 800	0,679	0,087	**NJ211-E-XL-TVP2**	**HJ211-E**
	100	21	99 000	95 000	16 400	8 700	5 800	0,693	–	**NUP211-E-XL-TVP2**	**–**
	100	25	117 000	118 000	21 000	8 700	4 700	0,812	–	**NJ2211-E-XL-TVP2**	–
	100	25	117 000	118 000	21 000	8 700	4 700	0,812	0,087	**NJ2211-E-XL-TVP2**	**HJ2211-E**
	100	25	117 000	118 000	21 000	8 700	4 700	0,828	–	**NUP2211-E-XL-TVP2**	**–**
	120	29	159 000	139 000	25 500	7 000	5 500	1,51	–	**NJ311-E-XL-TVP2**	–
	120	29	159 000	139 000	25 500	7 000	5 500	1,51	0,192	**NJ311-E-XL-TVP2**	**HJ311-E**
	120	29	159 000	139 000	26 000	7 000	5 500	1,54	–	**NUP311-E-XL-TVP2**	**–**
	120	43	235 000	230 000	44 000	7 000	4 500	2,27	–	**NJ2311-E-XL-TVP2**	–
	120	43	235 000	230 000	44 000	7 000	4 500	2,27	0,2	**NJ2311-E-XL-TVP2**	**HJ2311-E**
	120	43	235 000	230 000	44 000	7 000	4 500	2,31	–	**NUP2311-E-XL-TVP2**	**–**
	140	33	187 000	164 000	30 500	8 200	5 100	2,88	–	**NJ411-XL-M1**	–
	140	33	187 000	164 000	30 500	8 200	5 100	2,88	0,302	**NJ411-XL-M1**	**HJ411**
60	110	22	112 000	103 000	18 000	7 700	5 300	0,845	–	**NJ212-E-XL-TVP2**	–
	110	22	112 000	103 000	18 000	7 700	5 300	0,845	0,106	**NJ212-E-XL-TVP2**	**HJ212-E**
	110	22	112 000	103 000	18 100	7 700	5 300	0,865	–	**NUP212-E-XL-TVP2**	**–**
	110	28	152 000	153 000	28 000	7 700	4 300	1,1	–	**NJ2212-E-XL-TVP2**	–
	110	28	152 000	153 000	28 000	7 700	4 300	1,1	0,106	**NJ2212-E-XL-TVP2**	**HJ212-E**
	110	28	152 000	153 000	28 000	7 700	4 300	1,12	–	**NUP2212-E-XL-TVP2**	**–**
	130	31	177 000	157 000	29 000	6 500	5 200	1,89	–	**NJ312-E-XL-TVP2**	–
	130	31	177 000	157 000	29 000	6 500	5 200	1,89	0,229	**NJ312-E-XL-TVP2**	**HJ312-E**
	130	31	177 000	157 000	29 000	6 500	5 200	1,93	–	**NUP312-E-XL-TVP2**	**–**
	130	46	265 000	260 000	50 000	6 500	4 250	2,83	–	**NJ2312-E-XL-TVP2**	–
	130	46	265 000	260 000	50 000	6 500	4 250	2,83	0,238	**NJ2312-E-XL-TVP2**	**HJ2312-E**
	130	46	265 000	260 000	50 000	6 500	4 250	2,88	–	**NUP2312-E-XL-TVP2**	**–**
	150	35	211 000	184 000	33 500	7 500	4 800	3,47	–	**NJ412-XL-M1**	–
	150	35	211 000	184 000	33 500	7 500	4 800	3,47	0,347	**NJ412-XL-M1**	**HJ412**

medias *https://www.schaeffler.de/std/1F9A*

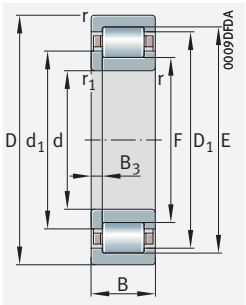

NUP
Locating bearing

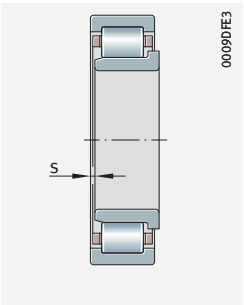

Axial displacement "s"
for NJ

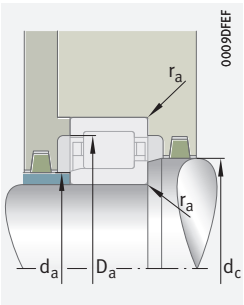

Mounting dimensions
for NJ

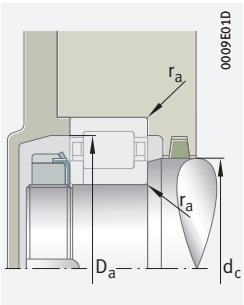

Mounting dimensions
for NUP

Dimensions											Mounting dimensions				
d	r	r_1	s	E	F	D_1	d_1	B_1	B_2	B_3	d_a		d_c	D_a	r_a
	min.	min.				≈	≈				min.[1]	max.	min.	max.[1]	max.
55	1,5	1,1	0,8	90	66	86,6	70,8	–	–	–	62	65	73	91	1,5
	1,5	1,1	–	90	66	86,6	70,8	6	9,5	–	62	–	73	91	1,5
	1,5	1,1	–	90	66	86,6	70,8	–	–	3,5	62	–	73	91	1,5
	1,5	1,1	1,3	90	66	86,6	70,8	–	–	–	62	65	73	91	1,5
	1,5	1,1	–	90	66	86,6	70,8	6	10	–	62	–	73	91	1,5
	1,5	1,1	–	90	66	86,6	70,8	–	–	4	62	–	73	91	1,5
	2	2	1,8	106,5	70,5	101,4	77,5	–	–	–	66	69	80	109	2
	2	2	–	106,5	70,5	101,4	77,5	9	14	–	66	–	80	109	2
	2	2	–	106,5	70,5	101,4	77,5	–	–	5	66	–	80	109	2
	2	2	3,3	106,5	70,5	101,4	77,5	–	–	–	66	69	80	109	2
	2	2	–	106,5	70,5	101,4	77,5	9	15,5	–	66	–	80	109	2
	2	2	–	106,5	70,5	101,4	77,5	–	–	6,5	66	–	80	109	2
	2,1	2,1	3,3	117,2	77,2	110,7	85	–	–	–	69	76	87	126	2,1
	2,1	2,1	–	117,2	77,2	110,7	85	10	16,5	–	69	–	87	126	2,1
60	1,5	1,5	1,6	100	72	96,1	77,6	–	–	–	69	71	80	101	1,5
	1,5	1,5	–	100	72	96,1	77,6	6	10	–	69	–	80	101	1,5
	1,5	1,5	–	100	72	96,1	77,6	–	–	4	69	–	80	101	1,5
	1,5	1,5	1,6	100	72	96,1	77,6	–	–	–	69	71	80	101	1,5
	1,5	1,5	–	100	72	96,1	77,6	6	10	–	69	–	80	101	1,5
	1,5	1,5	–	100	72	96,1	77,6	–	–	4	69	–	80	101	1,5
	2,1	2,1	1,8	115	77	109,6	84,4	–	–	–	72	75	86	118	2,1
	2,1	2,1	–	115	77	109,6	84,4	9	14,5	–	72	–	86	118	2,1
	2,1	2,1	–	115	77	109,6	84,4	–	–	5,5	72	–	86	118	2,1
	2,1	2,1	3,5	115	77	109,6	84,4	–	–	–	72	75	86	118	2,1
	2,1	2,1	–	115	77	109,6	84,4	9	16	–	72	–	86	118	2,1
	2,1	2,1	–	115	77	109,6	84,4	–	–	7	72	–	86	118	2,1
	2,1	2,1	3,4	127	83	119,5	91,6	–	–	–	74	82	94	136	2
	2,1	2,1	–	127	83	119,5	91,6	10	16,5	–	74	–	94	136	2

[1] Under axial load, observe the dimensions D_1 and d_1.

Cylindrical roller bearings with cage

Semi-locating bearings, locating bearings

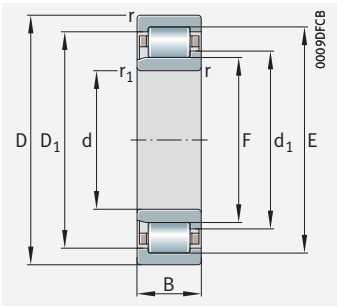

NJ
Semi-locating bearing

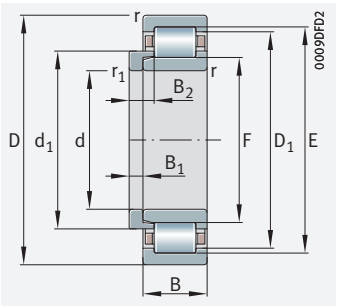

NJ and HJ
Locating bearings

d = 65 – 70 mm

Main dimensions			Basic load ratings		Fatigue limit load	Limiting speed	Speed rating	Mass m		Designation ➤429|1.12 ➤430|1.13 X-life ➤419	
d	D	B	dyn. C_r	stat. C_{0r}	C_{ur}	n_G	$n_{\vartheta r}$	Bearing	L-section ring	Bearing	L-section ring
			N	N	N	min^{-1}	min^{-1}	≈ kg	≈ kg		
65	120	23	128 000	120 000	21 000	7 100	4 900	1,06	–	**NJ213-E-XL-TVP2**	–
	120	23	128 000	120 000	21 000	7 100	4 900	1,06	0,127	**NJ213-E-XL-TVP2**	**HJ213-E**
	120	23	128 000	120 000	21 200	7 100	4 900	1,09	–	**NUP213-E-XL-TVP2**	**–**
	120	31	177 000	182 000	33 500	7 100	4 100	1,46	–	**NJ2213-E-XL-TVP2**	–
	120	31	177 000	182 000	33 500	7 100	4 100	1,46	0,13	**NJ2213-E-XL-TVP2**	**HJ2213-E**
	120	31	177 000	182 000	34 000	7 100	4 100	1,54	–	**NUP2213-E-XL-TVP2**	**–**
	140	33	214 000	191 000	35 000	5 900	4 800	2,32	–	**NJ313-E-XL-TVP2**	–
	140	33	214 000	191 000	35 000	5 900	4 800	2,32	0,285	**NJ313-E-XL-TVP2**	**HJ313-E**
	140	33	214 000	191 000	35 000	5 900	4 800	2,37	–	**NUP313-E-XL-TVP2**	**–**
	140	48	295 000	285 000	54 000	5 900	4 000	3,38	–	**NJ2313-E-XL-TVP2**	–
	140	48	295 000	285 000	54 000	5 900	4 000	3,38	0,303	**NJ2313-E-XL-TVP2**	**HJ2313-E**
	140	48	295 000	285 000	54 000	5 900	4 000	3,45	–	**NUP2313-E-XL-TVP2**	**–**
	160	37	230 000	203 000	36 500	7 000	4 600	4,15	–	**NJ413-XL-M1**	–
	160	37	230 000	203 000	36 500	7 000	4 600	4,15	0,432	**NJ413-XL-M1**	**HJ413**
70	125	24	141 000	138 000	24 500	6 800	4 650	1,18	–	**NJ214-E-XL-TVP2**	–
	125	24	141 000	138 000	24 500	6 800	4 650	1,18	0,155	**NJ214-E-XL-TVP2**	**HJ214-E**
	125	24	141 000	138 000	24 700	6 800	4 650	1,2	–	**NUP214-E-XL-TVP2**	**–**
	125	31	185 000	195 000	36 000	6 800	3 850	1,54	–	**NJ2214-E-XL-TVP2**	–
	125	31	185 000	195 000	36 000	6 800	3 850	1,54	0,157	**NJ2214-E-XL-TVP2**	**HJ2214-E**
	125	31	185 000	195 000	36 500	6 800	3 850	1,58	–	**NUP2214-E-XL-TVP2**	**–**
	150	35	242 000	222 000	40 000	5 500	4 500	2,84	–	**NJ314-E-XL-TVP2**	–
	150	35	242 000	222 000	40 000	5 500	4 500	2,84	0,328	**NJ314-E-XL-TVP2**	**HJ314-E**
	150	35	242 000	222 000	40 500	5 500	4 500	2,89	–	**NUP314-E-XL-TVP2**	**–**
	150	51	325 000	325 000	60 000	5 500	3 800	4,1	–	**NJ2314-E-XL-TVP2**	–
	150	51	325 000	325 000	60 000	5 500	3 800	4,1	0,352	**NJ2314-E-XL-TVP2**	**HJ2314-E**
	150	51	325 000	325 000	60 000	5 500	3 800	4,18	–	**NUP2314-E-XL-TVP2**	**–**
	180	42	285 000	255 000	46 000	6 200	4 250	6,07	–	**NJ414-XL-M1**	–
	180	42	285 000	255 000	46 000	6 200	4 250	6,07	0,63	**NJ414-XL-M1**	**HJ414**

medias *https://www.schaeffler.de/std/1F9A*

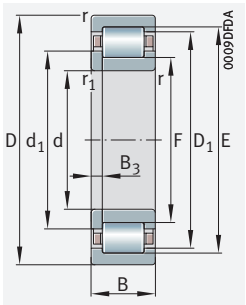

NUP
Locating bearing

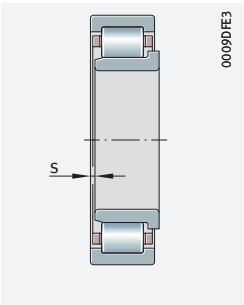

Axial displacement "s"
for NJ

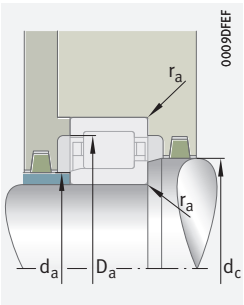

Mounting dimensions
for NJ

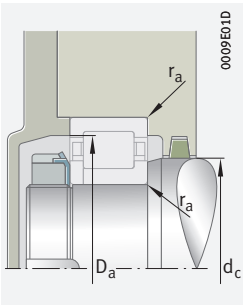

Mounting dimensions
for NUP

Dimensions											Mounting dimensions				
d	r	r_1	s	E	F	D_1	d_1	B_1	B_2	B_3	d_a		d_c	D_a	r_a
	min.	min.				≈	≈				min.[1]	max.	min.	max.[1]	max.
65	1,5	1,5	1,4	108,5	78,5	104,3	84,4	–	–	–	74	77	87	111	1,5
	1,5	1,5	–	108,5	78,5	104,3	84,4	6	10	–	74	–	87	111	1,5
	1,5	1,5	–	108,5	78,5	104,3	84,4	–	–	4	74	–	87	111	1,5
	1,5	1,5	1,9	108,5	78,5	104,3	84,4	–	–	–	74	77	87	111	1,5
	1,5	1,5	–	108,5	78,5	104,3	84,4	6	10,5	–	74	–	87	111	1,5
	1,5	1,5	–	108,5	78,5	104,3	84,4	–	–	4,5	74	–	87	111	1,5
	2,1	2,1	1,5	124,5	82,5	118,6	90,5	–	–	–	77	81	93	128	2,1
	2,1	2,1	–	124,5	82,5	118,6	90,5	10	15,5	–	77	–	93	128	2,1
	2,1	2,1	–	124,5	82,5	118,6	90,5	–	–	5,5	77	–	93	128	2,1
	2,1	2,1	4	124,5	82,5	118,6	90,5	–	–	–	77	81	93	128	2,1
	2,1	2,1	–	124,5	82,5	118,6	90,5	10	18	–	77	–	93	128	2,1
	2,1	2,1	–	124,5	82,5	118,6	90,5	–	–	8	77	–	93	128	2,1
	2,1	2,1	3,5	135,3	89,3	127,7	98,3	–	–	–	79	88	100	146	2,1
	2,1	2,1	–	135,3	89,3	127,7	98,3	11	18	–	79	–	100	146	2,1
70	1,5	1,5	1,2	113,5	83,5	109,4	89,4	–	–	–	79	82	92	116	1,5
	1,5	1,5	–	113,5	83,5	109,4	89,4	7	11	–	79	–	92	116	1,5
	1,5	1,5	–	113,5	83,5	109,4	89,4	–	–	4	79	–	92	116	1,5
	1,5	1,5	1,6	113,5	83,5	109,4	89,4	–	–	–	79	–	92	116	1,5
	1,5	1,5	–	113,5	83,5	109,4	89,4	7	11,5	–	79	–	92	116	1,5
	1,5	1,5	–	113,5	83,5	109,4	89,4	–	–	4,5	79	–	92	116	1,5
	2,1	2,1	1,7	133	89	126,8	97,4	–	–	–	82	87	100	138	2,1
	2,1	2,1	–	133	89	126,8	97,4	10	15,5	–	82	–	100	138	2,1
	2,1	2,1	–	133	89	126,8	97,4	–	–	5,5	82	–	100	138	2,1
	2,1	2,1	4,7	133	89	126,8	97,4	–	–	–	82	87	100	138	2,1
	2,1	2,1	–	133	89	126,8	97,4	10	18,5	–	82	–	100	138	2,1
	2,1	2,1	–	133	89	126,8	97,4	–	–	8,5	82	–	100	138	2,1
	3	3	4	152	100	142,7	110,3	–	–	–	86	99	112	164	2,5
	3	3	–	152	100	142,7	110,3	12	20	–	86	–	112	164	2,5

[1] Under axial load, observe the dimensions D_1 and d_1.

Cylindrical roller bearings with cage

Semi-locating bearings, locating bearings

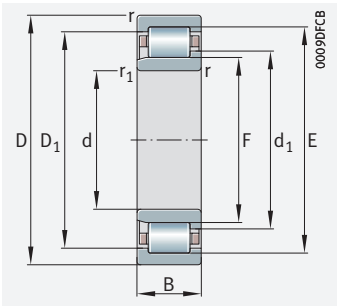

NJ
Semi-locating bearing

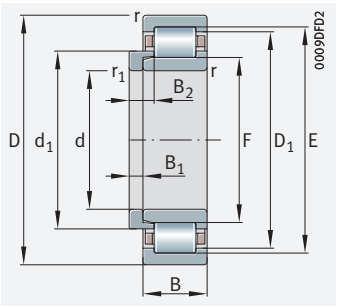

NJ and HJ
Locating bearings

d = 75 – 80 mm

Main dimensions			Basic load ratings		Fatigue limit load	Limiting speed	Speed rating	Mass m		Designation ➤429|1.12 ➤430|1.13 X-life ➤419	
d	D	B	dyn. C_r	stat. C_{0r}	C_{ur}	n_G	$n_{\vartheta r}$	Bearing	L-section ring	Bearing	L-section ring
			N	N	N	min^{-1}	min^{-1}	≈ kg	≈ kg		
75	130	25	155 000	157 000	28 000	6 500	4 400	1,3	–	**NJ215-E-XL-TVP2**	–
	130	25	155 000	157 000	28 000	6 500	4 400	1,3	0,164	**NJ215-E-XL-TVP2**	**HJ215-E**
	130	25	155 000	157 000	28 000	6 500	4 400	1,33	–	**NUP215-E-XL-TVP2**	**–**
	130	31	192 000	208 000	38 500	6 500	3 600	1,64	–	**NJ2215-E-XL-TVP2**	–
	130	31	192 000	208 000	38 500	6 500	3 600	1,64	0,165	**NJ2215-E-XL-TVP2**	**HJ2215-E**
	130	31	192 000	208 000	38 500	6 500	3 600	1,67	–	**NUP2215-E-XL-TVP2**	**–**
	160	37	285 000	265 000	47 000	5 100	4 150	3,39	–	**NJ315-E-XL-TVP2**	–
	160	37	285 000	265 000	47 000	5 100	4 150	3,39	0,407	**NJ315-E-XL-TVP2**	**HJ315-E**
	160	37	285 000	265 000	47 000	5 100	4 150	3,45	–	**NUP315-E-XL-TVP2**	**–**
	160	55	390 000	395 000	73 000	5 100	3 550	5,04	–	**NJ2315-E-XL-TVP2**	–
	160	55	390 000	395 000	73 000	5 100	3 550	5,04	0,436	**NJ2315-E-XL-TVP2**	**HJ2315-E**
	160	55	390 000	395 000	73 000	5 100	3 550	5,14	–	**NUP2315-E-XL-TVP2**	**–**
	190	45	325 000	295 000	51 000	5 800	4 100	7,21	–	**NJ415-XL-M1**	–
	190	45	325 000	295 000	51 000	5 800	4 100	7,21	0,737	**NJ415-XL-M1**	**HJ415**
80	140	26	166 000	168 000	29 500	6 100	4 200	1,58	–	**NJ216-E-XL-TVP2**	–
	140	26	166 000	168 000	29 500	6 100	4 200	1,58	0,22	**NJ216-E-XL-TVP2**	**HJ216-E**
	140	26	166 000	168 000	29 500	6 100	4 200	1,62	–	**NUP216-E-XL-TVP2**	**–**
	140	33	221 000	244 000	44 000	6 100	3 400	2,04	–	**NJ2216-E-XL-TVP2**	–
	140	33	221 000	244 000	44 000	6 100	3 400	2,04	0,22	**NJ2216-E-XL-TVP2**	**HJ216-E**
	140	33	221 000	244 000	44 500	6 100	3 400	2,08	–	**NUP2216-E-XL-TVP2**	**–**
	170	39	300 000	275 000	50 000	4 800	4 100	4,03	–	**NJ316-E-XL-TVP2**	–
	170	39	300 000	275 000	50 000	4 800	4 100	4,03	0,456	**NJ316-E-XL-TVP2**	**HJ316-E**
	170	39	300 000	275 000	50 000	4 800	4 100	4,11	–	**NUP316-E-XL-TVP2**	**–**
	170	58	420 000	425 000	79 000	4 800	3 450	6	–	**NJ2316-E-XL-TVP2**	–
	170	58	420 000	425 000	79 000	4 800	3 450	6	0,488	**NJ2316-E-XL-TVP2**	**HJ2316-E**
	170	58	420 000	425 000	79 000	4 800	3 450	6,11	–	**NUP2316-E-XL-TVP2**	**–**
	200	48	395 000	365 000	64 000	5 400	3 750	8,52	–	**NJ416-XL-M1**	–
	200	48	395 000	365 000	64 000	5 400	3 750	8,52	0,808	**NJ416-XL-M1**	**HJ416**

medias *https://www.schaeffler.de/std/1F9A*

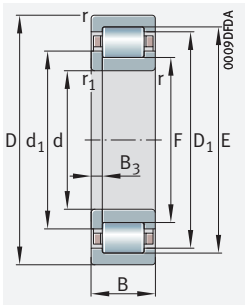

NUP
Locating bearing

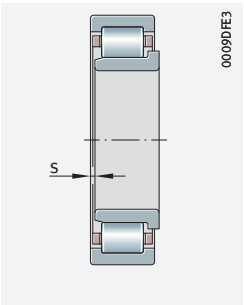

Axial displacement “s”
for NJ

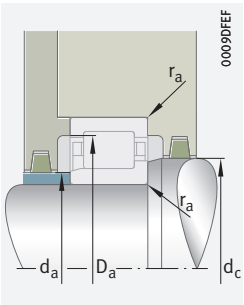

Mounting dimensions
for NJ

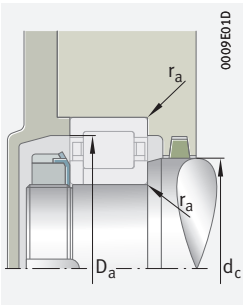

Mounting dimensions
for NUP

Dimensions											Mounting dimensions				
d	r	r_1	s	E	F	D_1	d_1	B_1	B_2	B_3	d_a		d_c	D_a	r_a
	min.	min.				≈	≈				min.[1]	max.	min.	max.[1]	max.
75	1,5	1,5	1,2	118,5	88,5	114,4	94,4	–	–	–	84	87	96	121	1,5
	1,5	1,5	–	118,5	88,5	114,4	94,4	7	11	–	84	–	96	121	1,5
	1,5	1,5	–	118,5	88,5	114,4	94,4	–	–	4	84	–	96	121	1,5
	1,5	1,5	1,6	118,5	88,5	114,4	94,4	–	–	–	84	87	96	121	1,5
	1,5	1,5	–	118,5	88,5	114,4	94,4	7	11,5	–	84	–	96	121	1,5
	1,5	1,5	–	118,5	88,5	114,4	94,4	–	–	4,5	84	–	96	121	1,5
	2,1	2,1	1,2	143	95	136,2	104,1	–	–	–	87	93	106	148	2,1
	2,1	2,1	–	143	95	136,2	104,1	11	16,5	–	87	–	106	148	2,1
	2,1	2,1	–	143	95	136,2	104,1	–	–	5,5	87	–	106	148	2,1
	2,1	2,1	4,2	143	95	136,2	104,1	–	–	–	87	93	106	148	2,1
	2,1	2,1	–	143	95	136,2	104,1	11	19,5	–	87	–	106	148	2,1
	2,1	2,1	–	143	95	136,2	104,1	–	–	8,5	87	–	106	148	2,1
	3	3	4,5	160,5	104,5	150,7	115,8	–	–	–	91	103	118	174	2,5
	3	3	–	160,5	104,5	150,7	115,8	13	21,5	–	91	–	118	174	2,5
80	2	2	1,3	127,3	95,3	122,9	101,5	–	–	–	91	94	104	129	2
	2	2	–	127,3	95,3	122,9	101,5	8	12,5	–	91	–	104	129	2
	2	2	–	127,3	95,3	122,9	101,5	–	–	4,5	91	–	104	129	2
	2	2	1,3	127,3	95,3	122,9	101,5	–	–	–	91	94	104	129	2
	2	2	–	127,3	95,3	122,9	101,5	8	12,5	–	91	–	104	129	2
	2	2	–	127,3	95,3	122,9	101,5	–	–	4,5	91	–	104	129	2
	2,1	2,1	0,7	151	101	143,9	110,4	–	–	–	92	99	114	158	2,1
	2,1	2,1	–	151	101	143,9	110,4	11	17	–	92	–	114	158	2,1
	2,1	2,1	–	151	101	143,9	110,4	–	–	6	92	–	114	158	2,1
	2,1	2,1	3,7	151	101	143,9	110,4	–	–	–	92	99	114	158	2,1
	2,1	2,1	–	151	101	143,9	110,4	11	20	–	92	–	114	158	2,1
	2,1	2,1	–	151	101	143,9	110,4	–	–	9	92	–	114	158	2,1
	3	3	4,6	170	110	159,7	121,8	–	–	–	96	109	124	184	2,5
	3	3	–	170	110	159,7	121,8	13	22	–	96	–	124	184	2,5

[1] Under axial load, observe the dimensions D_1 and d_1.

Cylindrical roller bearings with cage

Semi-locating bearings, locating bearings

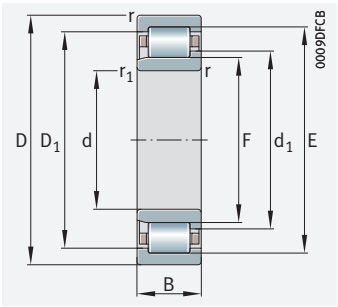

NJ
Semi-locating bearing

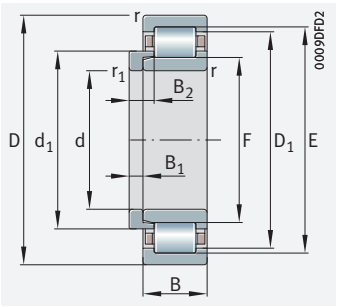

NJ and HJ
Locating bearings

d = 85 – 90 mm

Main dimensions			Basic load ratings		Fatigue limit load	Limiting speed	Speed rating	Mass m		Designation ➤429|1.12 ➤430|1.13 X-life ➤419	
d	D	B	dyn. C_r	stat. C_{0r}	C_{ur}	n_G	$n_{\vartheta r}$	Bearing	L-section ring	Bearing	L-section ring
			N	N	N	min^{-1}	min^{-1}	≈ kg	≈ kg		
85	150	28	194 000	194 000	34 000	5 600	4 000	1,95	–	**NJ217-E-XL-TVP2**	–
	150	28	194 000	194 000	34 000	5 600	4 000	1,95	0,247	**NJ217-E-XL-TVP2**	**HJ217-E**
	150	28	194 000	194 000	34 000	5 600	4 000	2,08	–	**NUP217-E-XL-TVP2**	**–**
	150	36	255 000	275 000	49 500	5 600	3 300	2,55	–	**NJ2217-E-XL-TVP2**	–
	150	36	255 000	275 000	49 500	5 600	3 300	2,55	0,249	**NJ2217-E-XL-TVP2**	**HJ2217-E**
	150	36	255 000	275 000	49 500	5 600	3 300	2,6	–	**NUP2217-E-XL-TVP2**	**–**
	180	41	320 000	300 000	54 000	4 550	3 900	4,71	–	**NJ317-E-XL-TVP2**	–
	180	41	320 000	300 000	54 000	4 550	3 900	4,71	0,566	**NJ317-E-XL-TVP2**	**HJ317-E**
	180	41	320 000	300 000	54 000	4 550	3 900	4,8	–	**NUP317-E-XL-TVP2**	**–**
	180	60	435 000	445 000	81 000	4 550	3 300	6,85	–	**NJ2317-E-XL-TVP2**	–
	180	60	435 000	445 000	81 000	4 550	3 300	6,85	0,606	**NJ2317-E-XL-TVP2**	**HJ2317-E**
	180	60	435 000	445 000	81 000	4 550	3 300	6,99	–	**NUP2317-E-XL-TVP2**	**–**
	210	52	420 000	385 000	67 000	5 200	3 850	10	–	**NJ417-XL-M1**	–
	210	52	420 000	385 000	67 000	5 200	3 850	10	0,901	**NJ417-XL-M1**	**HJ417**
90	160	30	215 000	217 000	37 500	5 200	3 900	2,41	–	**NJ218-E-XL-TVP2**	–
	160	30	215 000	217 000	37 500	5 200	3 900	2,41	0,317	**NJ218-E-XL-TVP2**	**HJ218-E**
	160	30	215 000	217 000	37 500	5 200	3 900	2,46	–	**NUP218-E-XL-TVP2**	**–**
	160	40	285 000	315 000	56 000	5 200	3 250	3,23	–	**NJ2218-E-XL-TVP2**	–
	160	40	285 000	315 000	56 000	5 200	3 250	3,23	0,323	**NJ2218-E-XL-TVP2**	**HJ2218-E**
	160	40	285 000	315 000	56 000	5 200	3 250	3,29	–	**NUP2218-E-XL-TVP2**	**–**
	190	43	370 000	350 000	60 000	4 250	3 650	5,49	–	**NJ318-E-XL-TVP2**	–
	190	43	370 000	350 000	60 000	4 250	3 650	5,49	0,623	**NJ318-E-XL-TVP2**	**HJ318-E**
	190	43	370 000	350 000	60 000	4 250	3 650	5,59	–	**NUP318-E-XL-TVP2**	**–**
	190	64	510 000	530 000	94 000	4 250	3 000	8,19	–	**NJ2318-E-XL-TVP2**	–
	190	64	510 000	530 000	94 000	4 250	3 000	8,19	0,669	**NJ2318-E-XL-TVP2**	**HJ2318-E**
	190	64	510 000	530 000	94 000	4 250	3 000	8,35	–	**NUP2318-E-XL-TVP2**	**–**
	225	54	465 000	425 000	74 000	4 800	3 500	11,8	–	**NJ418-XL-M1**	–
	225	54	465 000	425 000	74 000	4 800	3 500	11,8	1,1	**NJ418-XL-M1**	**HJ418**

medias *https://www.schaeffler.de/std/1F9A*

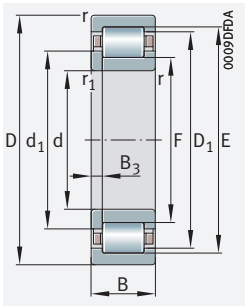

NUP
Locating bearing

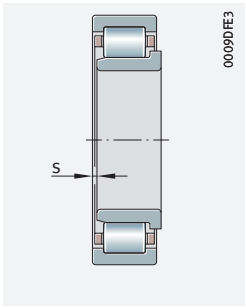

Axial displacement “s”
for NJ

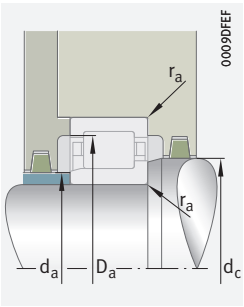

Mounting dimensions
for NJ

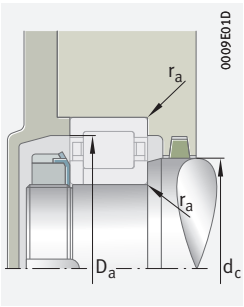

Mounting dimensions
for NUP

Dimensions											Mounting dimensions				
d	r	r_1	s	E	F	D_1	d_1	B_1	B_2	B_3	d_a		d_c	D_a	r_a
	min.	min.				≈	≈				min.[1]	max.	min.	max.[1]	max.
85	2	2	0,8	136,5	100,5	131,5	107,5	–	–	–	96	99	110	139	2
	2	2	–	136,5	100,5	131,5	107,5	8	12,5	–	96	–	110	139	2
	2	2	–	136,5	100,5	131,5	107,5	–	–	4,5	96	–	110	139	2
	2	2	1,3	136,5	100,5	131,5	107,5	–	–	–	96	99	110	139	2
	2	2	–	136,5	100,5	131,5	107,5	8	13	–	96	–	110	139	2
	2	2	–	136,5	100,5	131,5	107,5	–	–	5	96	–	110	139	2
	3	3	1,3	160	108	152,7	117,8	–	–	–	99	106	119	166	2,5
	3	3	–	160	108	152,7	117,8	12	18,5	–	99	–	119	166	2,5
	3	3	–	160	108	152,7	117,8	–	–	6,5	99	–	119	166	2,5
	3	3	4,7	160	108	152,7	117,8	–	–	–	99	106	119	166	2,5
	3	3	–	160	108	152,7	117,8	12	22	–	99	–	119	166	2,5
	3	3	–	160	108	152,7	117,8	–	–	10	99	–	119	166	2,5
	4	4	5,2	177	113	165,7	125,8	–	–	–	105	111	128	190	3
	4	4	–	177	113	165,7	125,8	14	24	–	105	–	128	190	3
90	2	2	1,5	145	107	139,7	114,3	–	–	–	101	105	116	149	2
	2	2	–	145	107	139,7	114,3	9	14	–	101	–	116	149	2
	2	2	–	145	107	139,7	114,3	–	–	5	101	–	116	149	2
	2	2	2,5	145	107	139,7	114,3	–	–	–	101	105	116	149	2
	2	2	–	145	107	139,7	114,3	9	15	–	101	–	116	149	2
	2	2	–	145	107	139,7	114,3	–	–	6	101	–	116	149	2
	3	3	1,5	169,5	113,5	161,6	124	–	–	–	104	111	127	176	2,5
	3	3	–	169,5	113,5	161,6	124	12	18,5	–	104	–	127	176	2,5
	3	3	–	169,5	113,5	161,6	124	–	–	6,5	104	–	127	176	2,5
	3	3	5	169,5	113,5	161,6	124	–	–	–	104	111	127	176	2,5
	3	3	–	169,5	113,5	161,6	124	12	22	–	104	–	127	176	2,5
	3	3	–	169,5	113,5	161,6	124	–	–	10	104	–	127	176	2,5
	4	4	5	191,5	123,5	179,7	136,8	–	–	–	110	122	139	205	3
	4	4	–	191,5	123,5	179,7	136,8	14	24	–	110	–	139	205	3

[1] Under axial load, observe the dimensions D_1 and d_1.

Cylindrical roller bearings with cage

Semi-locating bearings, locating bearings

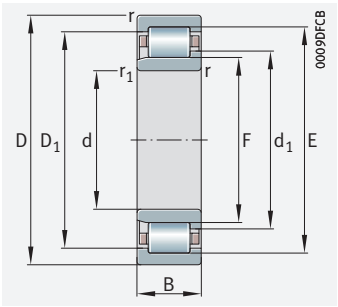

NJ
Semi-locating bearing

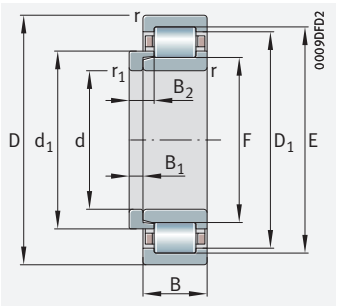

NJ and HJ
Locating bearings

d = 95 – 105 mm

Main dimensions			Basic load ratings		Fatigue limit load	Limiting speed	Speed rating	Mass m		Designation ➤429 | 1.12 ➤430 | 1.13 X-life ➤419	
d	D	B	dyn. C_r	stat. C_{0r}	C_{ur}	n_G	$n_{\vartheta r}$	Bearing	L-section ring	Bearing	L-section ring
			N	N	N	min^{-1}	min^{-1}	≈ kg	≈ kg		
95	170	32	260 000	265 000	45 000	4 850	3 650	2,94	–	**NJ219-E-XL-TVP2**	–
	170	32	260 000	265 000	45 000	4 850	3 650	2,94	0,352	**NJ219-E-XL-TVP2**	**HJ219-E**
	170	32	260 000	265 000	45 000	4 850	3 650	2,99	–	**NUP219-E-XL-TVP2**	**–**
	170	43	340 000	370 000	65 000	4 850	3 050	3,98	–	**NJ2219-E-XL-TVP2**	–
	170	43	340 000	370 000	65 000	4 850	3 050	3,98	0,366	**NJ2219-E-XL-TVP2**	**HJ2219-E**
	170	43	340 000	370 000	65 000	4 850	3 050	4,05	–	**NUP2219-E-XL-TVP2**	**–**
	200	45	390 000	380 000	65 000	4 050	3 550	6,44	–	**NJ319-E-XL-TVP2**	–
	200	45	390 000	380 000	65 000	4 050	3 550	6,44	0,777	**NJ319-E-XL-TVP2**	**HJ319-E**
	200	45	390 000	380 000	65 000	4 050	3 550	6,56	–	**NUP319-E-XL-TVP2**	**–**
	200	67	540 000	580 000	101 000	4 050	2 800	9,58	–	**NJ2319-E-XL-TVP2**	–
	200	67	540 000	580 000	101 000	4 050	2 800	9,58	0,83	**NJ2319-E-XL-TVP2**	**HJ2319-E**
	200	67	540 000	580 000	100 000	4 050	2 800	9,77	–	**NUP2319-E-XL-TVP2**	**–**
	240	55	495 000	470 000	81 000	4 550	3 200	14,1	–	**NJ419-XL-M1**	–
	240	55	495 000	470 000	81 000	4 550	3 200	14,1	1,36	**NJ419-XL-M1**	**HJ419**
100	180	34	295 000	305 000	52 000	4 550	3 450	3,55	–	**NJ220-E-XL-TVP2**	–
	180	34	295 000	305 000	52 000	4 550	3 450	3,55	0,436	**NJ220-E-XL-TVP2**	**HJ220-E**
	180	34	295 000	305 000	52 000	4 550	3 450	3,61	–	**NUP220-E-XL-TVP2**	**–**
	180	46	395 000	445 000	77 000	4 550	2 900	4,85	–	**NJ2220-E-XL-TVP2**	–
	180	46	395 000	445 000	77 000	4 550	2 900	4,85	0,446	**NJ2220-E-XL-TVP2**	**HJ2220-E**
	180	46	395 000	445 000	77 000	4 550	2 900	4,92	–	**NUP2220-E-XL-TVP2**	**–**
	215	47	450 000	425 000	72 000	3 700	3 350	7,82	–	**NJ320-E-XL-TVP2**	–
	215	47	450 000	425 000	72 000	3 700	3 350	7,82	0,883	**NJ320-E-XL-TVP2**	**HJ320-E**
	215	47	450 000	425 000	72 000	3 700	3 350	7,96	–	**NUP320-E-XL-TVP2**	**–**
	215	73	680 000	720 000	125 000	3 700	2 500	12,3	–	**NJ2320-E-XL-TVP2**	–
	215	73	680 000	720 000	125 000	3 700	2 500	12,3	0,934	**NJ2320-E-XL-TVP2**	**HJ2320-E**
	215	73	680 000	720 000	125 000	3 700	2 500	12,5	–	**NUP2320-E-XL-TVP2**	**–**
	250	58	550 000	530 000	88 000	4 350	2 950	16,1	–	**NJ420-XL-M1**	–
	250	58	550 000	530 000	88 000	4 350	2 950	16,1	1,55	**NJ420-XL-M1**	**HJ420**
105	190	36	310 000	320 000	54 000	4 350	3 400	4,17	–	**NJ221-E-XL-TVP2**	–
	190	36	310 000	320 000	54 000	4 350	3 400	4,17	0,51	**NJ221-E-XL-TVP2**	**HJ221-E**
	190	36	310 000	320 000	54 000	4 350	3 400	4,26	–	**NUP221-E-XL-TVP2**	**–**
	260	60	610 000	590 000	97 000	4 150	2 750	18	–	**NJ421-XL-M1**	–
	260	60	610 000	590 000	97 000	4 150	2 750	18	1,65	**NJ421-XL-M1**	**HJ421**

medias *https://www.schaeffler.de/std/1F9A*

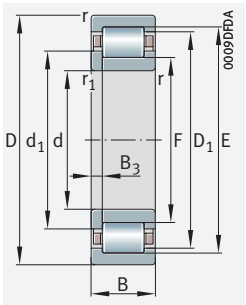

NUP
Locating bearing

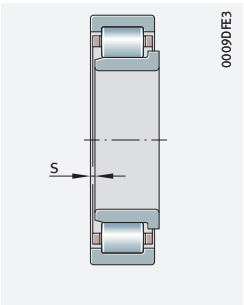

Axial displacement "s"
for NJ

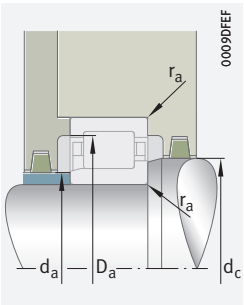

Mounting dimensions
for NJ

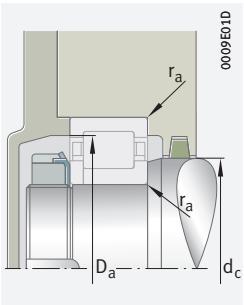

Mounting dimensions
for NUP

Dimensions											Mounting dimensions				
d	r	r_1	s	E	F	D_1	d_1	B_1	B_2	B_3	d_a		d_c	D_a	r_a
	min.	min.				≈	≈				min.[1]	max.	min.	max.[1]	max.
95	2,1	2,1	0,7	154,5	112,5	148,6	120,5	–	–	–	107	111	123	158	2,1
	2,1	2,1	–	154,5	112,5	148,6	120,5	9	14	–	107	–	123	158	2,1
	2,1	2,1	–	154,5	112,5	148,6	120,5	–	–	5	107	–	123	158	2,1
	2,1	2,1	2,2	154,5	112,5	148,6	120,5	–	–	–	107	111	123	158	2,1
	2,1	2,1	–	154,5	112,5	148,6	120,5	9	15,5	–	107	–	123	158	2,1
	2,1	2,1	–	154,5	112,5	148,6	120,5	–	–	6,5	107	–	123	158	2,1
	3	3	1,4	177,5	121,5	169,6	132	–	–	–	109	119	134	186	2,5
	3	3	–	177,5	121,5	169,6	132	13	20,5	–	109	–	134	186	2,5
	3	3	–	177,5	121,5	169,6	132	–	–	7,5	109	–	134	186	2,5
	3	3	5,6	177,5	121,5	169,6	132	–	–	–	109	119	134	186	2,5
	3	3	–	177,5	121,5	169,6	132	13	24,5	–	109	–	134	186	2,5
	3	3	–	177,5	121,5	169,6	132	–	–	11,5	109	–	134	186	2,5
	4	4	5,2	201,5	133,5	189,7	146,8	–	–	–	115	132	149	220	3
	4	4	–	201,5	133,5	189,7	146,8	15	25,5	–	115	–	149	220	3
100	2,1	2,1	1,5	163	119	156,9	127,3	–	–	–	112	117	130	168	2,1
	2,1	2,1	–	163	119	156,9	127,3	10	15	–	112	–	130	168	2,1
	2,1	2,1	–	163	119	156,9	127,3	–	–	5	112	–	130	168	2,1
	2,1	2,1	3	163	119	156,9	127,3	–	–	–	112	117	130	168	2,1
	2,1	2,1	–	163	119	156,9	127,3	10	16	–	112	–	130	168	2,1
	2,1	2,1	–	163	119	156,9	127,3	–	–	6	112	–	130	168	2,1
	3	3	1,2	191,5	127,5	182	139,4	–	–	–	114	125	143	201	2,5
	3	3	–	191,5	127,5	182	139,4	13	20,5	–	114	–	143	201	2,5
	3	3	–	191,5	127,5	182	139,4	–	–	7,5	114	–	143	201	2,5
	3	3	4,2	191,5	127,5	182	139,4	–	–	–	114	125	143	201	2,5
	3	3	–	191,5	127,5	182	139,4	13	23,5	–	114	–	143	201	2,5
	3	3	–	191,5	127,5	182	139,4	–	–	10,5	114	–	143	201	2,5
	4	4	5,7	211	139	198,2	152,8	–	–	–	120	137	156	230	3
	4	4	–	211	139	198,2	152,8	16	27	–	120	–	156	230	3
105	2,1	2,1	1,3	171,5	125,5	165,1	134,5	–	–	–	117	123	137	178	2,1
	2,1	2,1	–	171,5	125,5	165,1	134,5	10	16	–	117	–	137	178	2,1
	2,1	2,1	–	171,5	125,5	165,1	134,5	–	–	6	117	–	137	178	2,1
	4	4	5,7	220,5	144,5	207,4	158,8	–	–	–	125	143	162	240	3
	4	4	–	220,5	144,5	207,4	158,8	16	27	–	125	–	162	240	3

[1] Under axial load, observe the dimensions D_1 and d_1.

Cylindrical roller bearings with cage

Semi-locating bearings, locating bearings

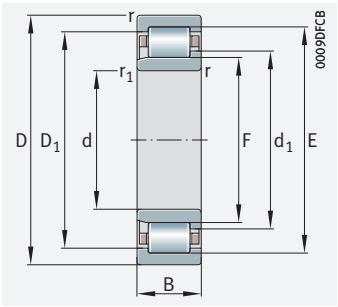

NJ
Semi-locating bearing

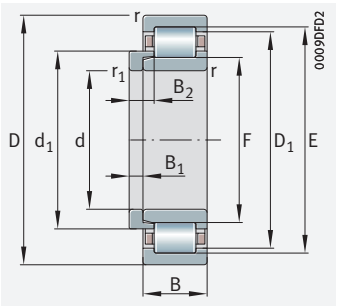

NJ and HJ
Locating bearings

d = 110 – 120 mm

Main dimensions			Basic load ratings		Fatigue limit load	Limiting speed	Speed rating	Mass m		Designation ➤429|1.12 ➤430|1.13 X-life ➤419	
d	D	B	dyn. C_r	stat. C_{0r}	C_{ur}	n_G	$n_{\vartheta r}$	Bearing	L-section ring	Bearing	L-section ring
			N	N	N	min^{-1}	min^{-1}	≈ kg	≈ kg		
110	200	38	345 000	365 000	60 000	4 100	3 250	4,93	–	**NJ222-E-XL-TVP2**	–
	200	38	345 000	365 000	60 000	4 100	3 250	4,93	0,616	**NJ222-E-XL-TVP2**	**HJ222-E**
	200	38	345 000	365 000	60 000	4 100	3 250	5,02	–	**NUP222-E-XL-TVP2**	**–**
	200	53	455 000	520 000	88 000	4 100	2 750	6,89	–	**NJ2222-E-XL-TVP2**	–
	200	53	455 000	520 000	88 000	4 100	2 750	6,89	0,647	**NJ2222-E-XL-TVP2**	**HJ2222-E**
	200	53	455 000	520 000	88 000	4 100	2 750	7,02	–	**NUP2222-E-XL-TVP2**	**–**
	240	50	495 000	475 000	80 000	3 350	3 050	10,3	–	**NJ322-E-XL-TVP2**	–
	240	50	495 000	475 000	80 000	3 350	3 050	10,3	1,21	**NJ322-E-XL-TVP2**	**HJ322-E**
	240	50	495 000	475 000	80 000	3 350	3 050	10,7	–	**NUP322-E-XL-TVP2**	**–**
	240	80	750 000	800 000	138 000	3 350	2 290	16,9	–	**NJ2322-E-XL-TVP2**	–
	240	80	750 000	800 000	138 000	3 350	2 290	16,9	1,3	**NJ2322-E-XL-TVP2**	**HJ2322-E**
	240	80	750 000	800 000	137 000	3 350	2 290	17,2	–	**NUP2322-E-XL-TVP2**	**–**
	280	65	680 000	660 000	107 000	3 850	2 550	22,8	–	**NJ422-XL-M1**	–
	280	65	680 000	660 000	107 000	3 850	2 550	22,8	2,1	**NJ422-XL-M1**	**HJ422**
120	215	40	390 000	415 000	70 000	3 750	3 050	5,91	–	**NJ224-E-XL-TVP2**	–
	215	40	390 000	415 000	70 000	3 750	3 050	5,91	0,707	**NJ224-E-XL-TVP2**	**HJ224-E**
	215	40	390 000	415 000	69 000	3 750	3 050	6,02	–	**NUP224-E-XL-TVP2**	**–**
	215	58	530 000	610 000	104 000	3 750	2 500	8,54	–	**NJ2224-E-XL-TVP2**	–
	215	58	530 000	610 000	104 000	3 750	2 500	8,54	0,75	**NJ2224-E-XL-TVP2**	**HJ2224-E**
	215	58	530 000	610 000	104 000	3 750	2 500	8,7	–	**NUP2224-E-XL-TVP2**	**–**
	260	55	610 000	600 000	97 000	3 050	2 650	13,5	–	**NJ324-E-XL-TVP2**	–
	260	55	610 000	600 000	97 000	3 050	2 650	13,5	1,41	**NJ324-E-XL-TVP2**	**HJ324-E**
	260	55	610 000	600 000	97 000	3 050	2 650	13,8	–	**NUP324-E-XL-TVP2**	**–**
	260	86	930 000	1 010 000	169 000	3 950	1 980	23,8	–	**NJ2324-E-XL-M1**	–
	260	86	930 000	1 010 000	169 000	3 950	1 980	23,8	1,49	**NJ2324-E-XL-M1**	**HJ2324-E**
	260	86	930 000	1 010 000	168 000	3 950	1 980	24,1	–	**NUP2324-E-XL-M1**	**–**
	310	72	850 000	840 000	131 000	3 450	2 200	31,3	–	**NJ424-XL-M1**	–
	310	72	850 000	840 000	131 000	3 450	2 200	31,3	2,61	**NJ424-XL-M1**	**HJ424**

medias *https://www.schaeffler.de/std/1F9A*

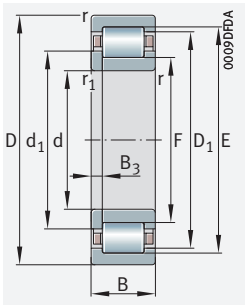

NUP
Locating bearing

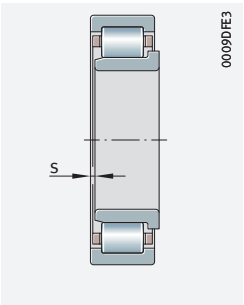

Axial displacement "s"
for NJ

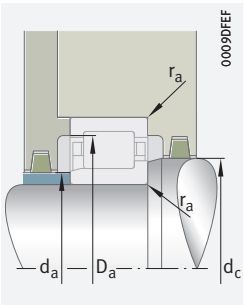

Mounting dimensions
for NJ

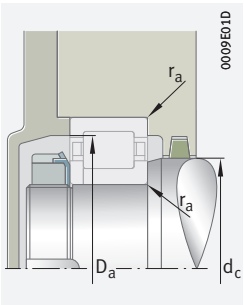

Mounting dimensions
for NUP

Dimensions											Mounting dimensions				
d	r	r_1	s	E	F	D_1	d_1	B_1	B_2	B_3	d_a		d_c	D_a	r_a
	min.	min.				≈	≈				min.[1]	max.	min.	max.[1]	max.
110	2,1	2,1	1,5	180,5	132,5	173,8	141,6	–	–	–	122	130	144	188	2,1
	2,1	2,1	–	180,5	132,5	173,8	141,6	11	17	–	122	–	144	188	2,1
	2,1	2,1	–	180,5	132,5	173,8	141,6	–	–	6	122	–	144	188	2,1
	2,1	2,1	4	180,5	132,5	173,8	141,6	–	–	–	122	130	144	188	2,1
	2,1	2,1	–	180,5	132,5	173,8	141,6	11	19,5	–	122	–	144	188	2,1
	2,1	2,1	–	180,5	132,5	173,8	141,6	–	–	8,5	122	–	144	188	2,1
	3	3	1,3	211	143	200,9	155,6	–	–	–	124	140	158	226	2,5
	3	3	–	211	143	200,9	155,6	14	22	–	124	–	158	226	2,5
	3	3	–	211	143	200,9	155,6	–	–	8	124	–	158	226	2,5
	3	3	5,8	211	143	200,9	155,6	–	–	–	124	140	158	226	2,5
	3	3	–	211	143	200,9	155,6	14	26,5	–	124	–	158	226	2,5
	3	3	–	211	143	200,9	155,6	–	–	12,5	124	–	158	226	2,5
	4	4	6,2	235	155	220,9	170,3	–	–	–	130	153	173	260	3
	4	4	–	235	155	220,9	170,3	17	29,5	–	130	–	173	260	3
120	2,1	2,1	1,4	195,5	143,5	187,8	153,2	–	–	–	132	141	156	203	2,1
	2,1	2,1	–	195,5	143,5	187,8	153,2	11	17	–	132	–	156	203	2,1
	2,1	2,1	–	195,5	143,5	187,8	153,2	–	–	6	132	–	156	203	2,1
	2,1	2,1	4,5	195,5	143,5	187,8	153,2	–	–	–	132	141	156	203	2,1
	2,1	2,1	–	195,5	143,5	187,8	153,2	11	20	–	132	–	156	203	2,1
	2,1	2,1	–	195,5	143,5	187,8	153,2	–	–	9	132	–	156	203	2,1
	3	3	3,5	230	154	218,7	168,1	–	–	–	134	151	171	246	2,5
	3	3	–	230	154	218,7	168,1	14	22,5	–	134	–	171	246	2,5
	3	3	–	230	154	218,7	168,1	–	–	8,5	134	–	171	246	2,5
	3	3	7,2	230	154	218,7	168,1	–	–	–	134	151	171	246	2,5
	3	3	–	230	154	218,7	168,1	14	26	–	134	–	171	246	2,5
	3	3	–	230	154	218,7	168,1	–	–	12	134	–	171	246	2,5
	5	5	6,9	260	170	243,9	187,3	–	–	–	144	168	190	286	4
	5	5	–	260	170	243,9	187,3	17	30,5	–	144	–	190	286	4

[1] Under axial load, observe the dimensions D_1 and d_1.

Cylindrical roller bearings with cage

Semi-locating bearings, locating bearings

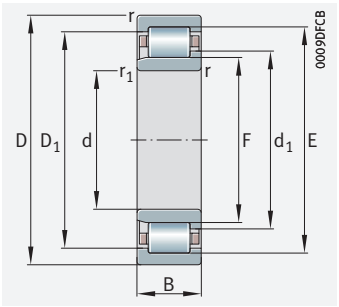

NJ
Semi-locating bearing

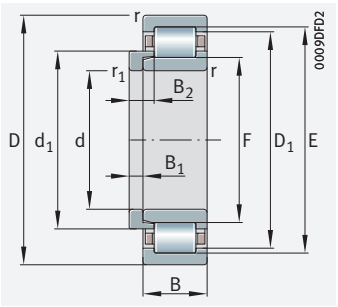

NJ and HJ
Locating bearings

d = 130 – 140 mm

Main dimensions			Basic load ratings		Fatigue limit load	Limiting speed	Speed rating	Mass m		Designation ➤429 | 1.12 ➤430 | 1.13 X-life ➤419	
d	D	B	dyn. C_r N	stat. C_{0r} N	C_{ur} N	n_G min^{-1}	$n_{\vartheta r}$ min^{-1}	Bearing ≈ kg	L-section ring ≈ kg	Bearing	L-section ring
130	230	40	425 000	445 000	71 000	3 500	2 800	6,63	–	**NJ226-E-XL-TVP2**	–
	230	40	425 000	445 000	71 000	3 500	2 800	6,63	0,78	**NJ226-E-XL-TVP2**	**HJ226-E**
	230	40	425 000	445 000	71 000	3 500	2 800	6,74	–	**NUP226-E-XL-TVP2**	**–**
	230	64	620 000	730 000	120 000	3 500	2 280	10,6	–	**NJ2226-E-XL-TVP2**	–
	230	64	620 000	730 000	120 000	3 500	2 280	10,6	0,849	**NJ2226-E-XL-TVP2**	**HJ2226-E**
	230	64	620 000	730 000	120 000	3 500	2 280	10,8	–	**NUP2226-E-XL-TVP2**	**–**
	280	58	680 000	670 000	107 000	2 850	2 430	16,5	–	**NJ326-E-XL-TVP2**	–
	280	58	680 000	670 000	107 000	2 850	2 430	16,5	1,64	**NJ326-E-XL-TVP2**	**HJ326-E**
	280	58	680 000	670 000	106 000	2 850	2 430	16,7	–	**NUP326-E-XL-TVP2**	**–**
	280	93	1 080 000	1 220 000	198 000	3 700	1 750	29,2	–	**NJ2326-E-XL-M1**	–
	280	93	1 080 000	1 220 000	198 000	3 700	1 750	29,2	1,77	**NJ2326-E-XL-M1**	**HJ2326-E**
	280	93	1 080 000	1 220 000	197 000	3 700	1 750	29,7	–	**NUP2326-E-XL-M1**	**–**
140	250	42	460 000	510 000	78 000	4 250	2 600	9,46	–	**NJ228-E-XL-M1**	–
	250	42	460 000	510 000	78 000	4 250	2 600	9,46	0,986	**NJ228-E-XL-M1**	**HJ228-E**
	250	42	460 000	510 000	79 000	4 250	2 600	9,61	–	**NUP228-E-XL-M1**	**–**
	250	68	670 000	830 000	133 000	4 250	2 050	14,7	–	**NJ2228-E-XL-M1**	–
	250	68	670 000	830 000	133 000	4 250	2 050	14,7	1,08	**NJ2228-E-XL-M1**	**HJ2228-E**
	250	68	670 000	830 000	133 000	4 250	2 050	16,8	–	**NUP2228-E-XL-M1**	**–**
	300	62	790 000	800 000	126 000	2 650	2 170	20,5	–	**NJ328-E-XL-TVP2**	–
	300	62	790 000	800 000	126 000	2 650	2 170	20,5	2,03	**NJ328-E-XL-TVP2**	**HJ328-E**
	300	62	790 000	800 000	126 000	2 650	2 170	20,8	–	**NUP328-E-XL-TVP2**	**–**
	300	102	1 210 000	1 390 000	222 000	3 450	1 620	36,6	–	**NJ2328-E-XL-M1**	–
	300	102	1 210 000	1 390 000	222 000	3 450	1 620	36,6	2,2	**NJ2328-E-XL-M1**	**HJ2328-E**
	300	102	1 210 000	1 390 000	221 000	3 450	1 620	37,1	–	**NUP2328-E-XL-M1**	**–**

medias *https://www.schaeffler.de/std/1F9A*

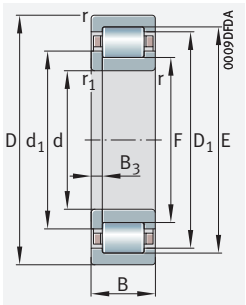

NUP
Locating bearing

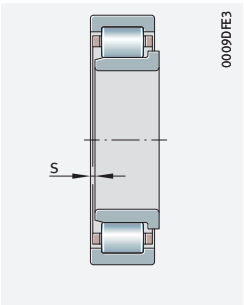

Axial displacement “s”
for NJ

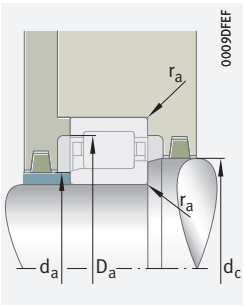

Mounting dimensions
for NJ

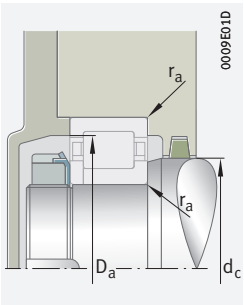

Mounting dimensions
for NUP

Dimensions											Mounting dimensions				
d	r	r_1	s	E	F	D_1	d_1	B_1	B_2	B_3	d_a		d_c	D_a	r_a
	min.	min.				≈	≈				min.[1]	max.	min.	max.[1]	max.
130	3	3	1,2	209,5	153,5	201,2	164	–	–	–	144	151	168	216	2,5
	3	3	–	209,5	153,5	201,2	164	11	17	–	144	–	168	216	2,5
	3	3	–	209,5	153,5	201,2	164	–	–	6	144	–	168	216	2,5
	3	3	5,2	209,5	153,5	201,2	164	–	–	–	144	151	168	216	2,5
	3	3	–	209,5	153,5	201,2	164	11	21	–	144	–	168	216	2,5
	3	3	–	209,5	153,5	201,2	164	–	–	10	144	–	168	216	2,5
	4	4	3,5	247	167	235,2	181,7	–	–	–	147	164	184	263	3
	4	4	–	247	167	235,2	181,7	14	23	–	147	–	184	263	3
	4	4	–	247	167	235,2	181,7	–	–	9	147	–	184	263	3
	4	4	8,1	247	167	235,2	181,7	–	–	–	147	164	184	263	3
	4	4	–	247	167	235,2	181,7	14	28	–	147	–	184	263	3
	4	4	–	247	167	235,2	181,7	–	–	14	147	–	184	263	3
140	3	3	3,8	225	169	216,7	179,4	–	–	–	154	166	182	236	2,5
	3	3	–	225	169	216,7	179,4	11	18	–	154	–	182	236	2,5
	3	3	–	225	169	216,7	179,4	–	–	7	154	–	182	236	2,5
	3	3	7	225	169	216,7	179,4	–	–	–	154	166	182	236	2,5
	3	3	–	225	169	216,7	179,4	11	23	–	154	–	182	236	2,5
	3	3	–	225	169	216,7	179,4	–	–	12	154	–	182	236	2,5
	4	4	5,2	264	180	251,7	195,4	–	–	–	157	176	198	283	3
	4	4	–	264	180	251,7	195,4	15	25	–	157	–	198	283	3
	4	4	–	264	180	251,7	195,4	–	–	10	157	–	198	283	3
	4	4	9,2	264	180	251,7	195,4	–	–	–	157	176	198	283	3
	4	4	–	264	180	251,7	195,4	15	31	–	157	–	198	283	3
	4	4	–	264	180	251,7	195,4	–	–	16	157	–	198	283	3

[1] Under axial load, observe the dimensions D_1 and d_1.

Cylindrical roller bearings with cage

Semi-locating bearings, locating bearings

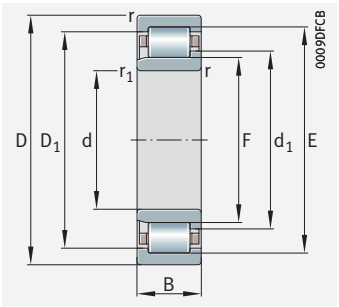

NJ
Semi-locating bearing

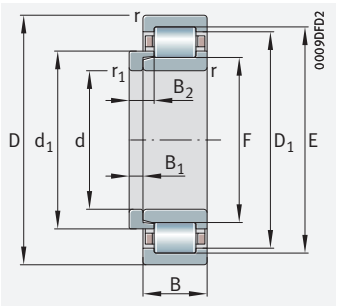

NJ and HJ
Locating bearings

d = 150 – 170 mm

Main dimensions			Basic load ratings		Fatigue limit load	Limiting speed	Speed rating	Mass m		Designation ➤429 | 1.12 ➤430 | 1.13 X-life ➤419	
d	D	B	dyn. C_r N	stat. C_{0r} N	C_{ur} N	n_G min^{-1}	$n_{\vartheta r}$ min^{-1}	Bearing ≈ kg	L-section ring ≈ kg	Bearing	L-section ring
150	270	45	520 000	590 000	90 000	3 950	2 350	12	–	**NJ230-E-XL-M1**	–
	270	45	520 000	590 000	90 000	3 950	2 350	12	1,26	**NJ230-E-XL-M1**	**HJ230-E**
	270	45	520 000	590 000	90 000	3 950	2 350	12,2	–	**NUP230-E-XL-M1**	**–**
	270	73	780 000	970 000	155 000	3 950	1 850	18,9	–	**NJ2230-E-XL-M1**	–
	270	73	780 000	970 000	155 000	3 950	1 850	18,9	1,36	**NJ2230-E-XL-M1**	**HJ2230-E**
	270	73	780 000	970 000	154 000	3 950	1 850	19,2	–	**NUP2230-E-XL-M1**	**–**
	320	65	900 000	930 000	141 000	3 200	1 940	27,4	–	**NJ330-E-XL-M1**	–
	320	65	900 000	930 000	141 000	3 200	1 940	27,4	2,33	**NJ330-E-XL-M1**	**HJ330-E**
	320	65	900 000	930 000	141 000	3 200	1 940	27,8	–	**NUP330-E-XL-M1**	**–**
	320	108	1 380 000	1 600 000	250 000	3 200	1 460	44,1	–	**NJ2330-E-XL-M1**	–
	320	108	1 380 000	1 600 000	250 000	3 200	1 460	44,1	2,55	**NJ2330-E-XL-M1**	**HJ2330-E**
	320	108	1 380 000	1 600 000	249 000	3 200	1 460	44,8	–	**NUP2330-E-XL-M1**	**–**
160	290	48	590 000	670 000	102 000	3 650	2 160	14,9	–	**NJ232-E-XL-M1**	–
	290	48	590 000	670 000	102 000	3 650	2 160	14,9	1,47	**NJ232-E-XL-M1**	**HJ232-E**
	290	48	590 000	670 000	102 000	3 650	2 160	15,2	–	**NUP232-E-XL-M1**	**–**
	290	80	940 000	1 170 000	187 000	3 600	1 660	24,1	–	**NJ2232-E-XL-M1**	–
	290	80	940 000	1 170 000	187 000	3 600	1 660	24,1	1,56	**NJ2232-E-XL-M1**	**HJ2232-E**
	290	80	940 000	1 170 000	185 000	3 600	1 660	24,5	–	**NUP2232-E-XL-M1**	**–**
	340	68	860 000	1 060 000	130 000	3 000	1 770	32,3	–	**NJ332-E-M1**	–
	340	68	860 000	1 060 000	130 000	3 000	1 770	32,3	2,58	**NJ332-E-M1**	**HJ332-E**
	340	114	1 300 000	1 800 000	229 000	3 000	1 350	52,3	–	**NJ2332-E-M1**	–
	340	114	1 300 000	1 800 000	229 000	3 000	1 350	52,3	2,85	**NJ2332-E-M1**	**HJ2332-E**
170	310	52	700 000	780 000	119 000	3 350	1 970	18,4	–	**NJ234-E-XL-M1**	–
	310	52	700 000	780 000	119 000	3 350	1 970	18,4	1,58	**NJ234-E-XL-M1**	**HJ234-E**
	310	52	700 000	780 000	118 000	3 350	1 970	18,6	–	**NUP234-E-XL-M1**	**–**
	310	86	1 130 000	1 400 000	216 000	3 300	1 470	29,8	–	**NJ2234-E-XL-M1**	–
	310	86	1 130 000	1 400 000	216 000	3 300	1 470	29,8	1,78	**NJ2234-E-XL-M1**	**HJ2234-E**
	310	86	1 130 000	1 400 000	215 000	3 300	1 470	30,2	–	**NUP2234-E-XL-M1**	**–**
	360	72	960 000	1 210 000	140 000	2 800	1 610	38,6	–	**NJ334-E-TB-M1**	–
	360	72	960 000	1 210 000	140 000	2 800	1 610	38,6	3,21	**NJ334-E-TB-M1**	**HJ334-E**
	360	120	1 490 000	2 070 000	231 000	2 800	1 210	62,3	–	**NJ2334-EX-TB-M1**	–
	360	120	1 490 000	2 070 000	231 000	2 800	1 210	62,3	3,53	**NJ2334-EX-TB-M1**	**HJ2334-E**

medias *https://www.schaeffler.de/std/1F9A*

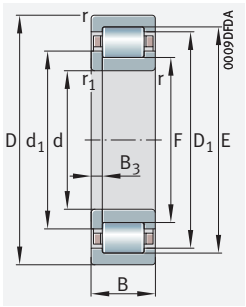

NUP
Locating bearing

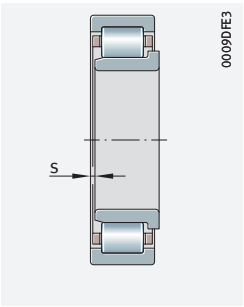

Axial displacement “s”
for NJ

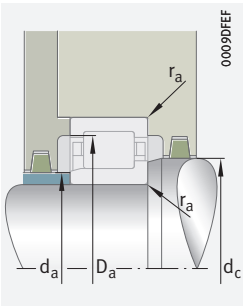

Mounting dimensions
for NJ

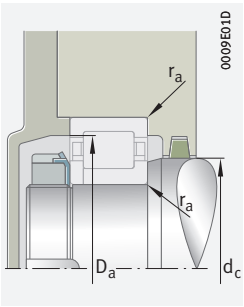

Mounting dimensions
for NUP

Dimensions											Mounting dimensions				
d	r	r_1	s	E	F	D_1	d_1	B_1	B_2	B_3	d_a		d_c	D_a	r_a
	min.	min.				≈	≈				min.[1]	max.	min.	max.[1]	max.
150	3	3	4	242	182	233,2	193,1	–	–	–	164	179	196	256	2,5
	3	3	–	242	182	233,2	193,1	12	19,5	–	164	–	196	256	2,5
	3	3	–	242	182	233,2	193,1	–	–	7,5	164	–	196	256	2,5
	3	3	7,5	242	182	233,2	193,1	–	–	–	164	179	196	256	2,5
	3	3	–	242	182	233,2	193,1	12	24,5	–	164	–	196	256	2,5
	3	3	–	242	182	233,2	193,1	–	–	12,5	164	–	196	256	2,5
	4	4	5,5	283	193	269,8	209,5	–	–	–	167	190	213	303	3
	4	4	–	283	193	269,8	209,5	15	25	–	167	–	213	303	3
	4	4	–	283	193	269,8	209,5	–	–	10	167	–	213	303	3
	4	4	9,7	283	193	269,8	209,5	–	–	–	167	190	213	303	3
	4	4	–	283	193	269,8	209,5	15	31,5	–	167	–	213	303	3
	4	4	–	283	193	269,8	209,5	–	–	16,5	167	–	213	303	3
160	3	3	4,1	259	195	249,6	206,8	–	–	–	174	192	210	276	2,5
	3	3	–	259	195	249,6	206,8	12	20	–	174	–	210	276	2,5
	3	3	–	259	195	249,6	206,8	–	–	8	174	–	210	276	2,5
	3	3	7,2	261	193	251,1	205,5	–	–	–	174	192	210	276	2,5
	3	3	–	261	193	251,1	205,5	12	24,5	–	174	–	210	276	2,5
	3	3	–	261	193	251,1	205,5	–	–	12,5	174	–	210	276	2,5
	4	4	5,6	300	204	286	221,6	–	–	–	177	200	228	323	3
	4	4	–	300	204	286	221,6	15	25	–	177	–	228	323	3
	4	4	9,9	300	204	286	221,6	–	–	–	177	200	228	323	3
	4	4	–	300	204	286	221,6	15	32	–	177	–	228	323	3
170	4	4	4,3	279	207	268,5	218,4	–	–	–	187	204	223	293	3
	4	4	–	279	207	268,5	218,4	12	20	–	187	–	223	293	3
	4	4	–	279	207	268,5	218,4	–	–	8	187	–	223	293	3
	4	4	7,2	281	205	269,9	219	–	–	–	187	204	223	293	3
	4	4	–	281	205	269,9	219	12	24	–	187	–	223	293	3
	4	4	–	281	205	269,9	219	–	–	12	187	–	223	293	3
	4	4	6	–	218	298	238	–	–	–	187	215	240	343	3
	4	4	–	–	218	298	238	16	27	–	187	–	240	343	3
	4	4	10,2	–	216	299,2	236,8	–	–	–	187	214	238,3	343	3
	4	4	–	–	216	299,2	236,8	16	33,5	–	187	–	238,3	343	3

[1] Under axial load, observe the dimensions D_1 and d_1.

Cylindrical roller bearings with cage

Semi-locating bearings, locating bearings

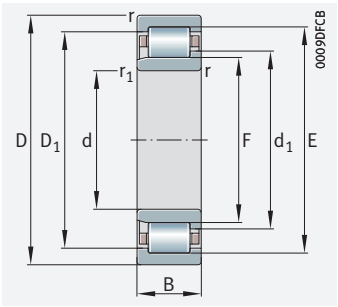

NJ
Semi-locating bearing

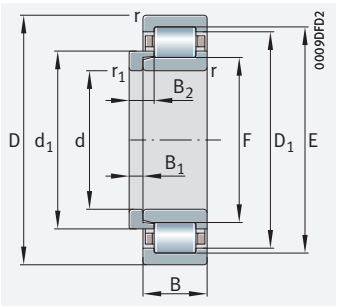

NJ and HJ
Locating bearings

d = 180 – 200 mm

Main dimensions			Basic load ratings		Fatigue limit load	Limiting speed	Speed rating	Mass m		Designation ➤429 | 1.12 ➤430 | 1.13 X-life ➤419	
d	D	B	dyn. C_r N	stat. C_{0r} N	C_{ur} N	n_G min^{-1}	$n_{\vartheta r}$ min^{-1}	Bearing ≈ kg	L-section ring ≈ kg	Bearing	L-section ring
180	320	52	730 000	830 000	124 000	3 250	1 850	19,2	–	**NJ236-E-XL-M1**	–
	320	52	730 000	830 000	124 000	3 250	1 850	19,2	1,76	**NJ236-E-XL-M1**	**HJ236-E**
	320	52	730 000	830 000	124 000	3 250	1 850	17,3	–	**NUP236-E-XL-M1**	**–**
	320	86	1 180 000	1 490 000	228 000	3 200	1 380	31,1	–	**NJ2236-E-XL-M1**	–
	320	86	1 180 000	1 490 000	228 000	3 200	1 380	31,1	1,87	**NJ2236-E-XL-M1**	**HJ2236-E**
	320	86	1 180 000	1 490 000	227 000	3 200	1 380	31,6	–	**NUP2236-E-XL-M1**	**–**
	380	75	1 040 000	1 320 000	145 000	2 650	1 500	44,6	–	**NJ336-E-TB-M1**	–
	380	75	1 040 000	1 320 000	145 000	2 650	1 500	44,6	3,77	**NJ336-E-TB-M1**	**HJ336-E**
	380	126	1 680 000	2 330 000	260 000	2 600	1 120	72,9	–	**NJ2336-EX-TB-M1**	–
	380	126	1 680 000	2 330 000	260 000	2 600	1 120	72,9	4,05	**NJ2336-EX-TB-M1**	**HJ2336-E**
190	340	55	680 000	930 000	113 000	3 050	1 720	23,2	–	**NJ238-E-M1**	–
	340	55	680 000	930 000	113 000	3 050	1 720	23,2	2,17	**NJ238-E-M1**	**HJ238-E**
	340	55	680 000	930 000	112 000	3 050	1 720	23,5	–	**NUP238-E-M1**	**–**
	340	92	1 090 000	1 650 000	204 000	3 000	1 290	37,7	–	**NJ2238-E-M1**	–
	340	92	1 090 000	1 650 000	204 000	3 000	1 290	37,7	2,31	**NJ2238-E-M1**	**HJ2238-E**
	400	132	1 890 000	2 650 000	290 000	2 440	1 010	84,4	–	**NJ2338-EX-TB-M1**	–
	400	132	1 890 000	2 650 000	290 000	2 440	1 010	84,4	4,8	**NJ2338-EX-TB-M1**	**HJ2338-E**
200	360	58	750 000	1 040 000	124 000	2 900	1 600	27,5	–	**NJ240-E-M1**	–
	360	58	750 000	1 040 000	124 000	2 900	1 600	27,5	2,62	**NJ240-E-M1**	**HJ240-E**
	360	58	750 000	1 040 000	123 000	2 900	1 600	28	–	**NUP240-E-M1**	**–**
	360	98	1 220 000	1 880 000	229 000	2 850	1 180	45,3	–	**NJ2240-E-M1**	–
	360	98	1 220 000	1 880 000	229 000	2 850	1 180	45,3	2,78	**NJ2240-E-M1**	**HJ2240-E**
	420	80	1 180 000	1 520 000	165 000	2 410	1 320	58,1	–	**NJ340-E-TB-M1**	–
	420	80	1 180 000	1 520 000	165 000	2 410	1 320	58,1	4,94	**NJ340-E-TB-M1**	**HJ340-E**
	420	138	2 040 000	2 900 000	315 000	2 330	940	97,2	–	**NJ2340-EX-TB-M1**	–
	420	138	2 040 000	2 900 000	315 000	2 330	940	97,2	5,28	**NJ2340-EX-TB-M1**	**HJ2340-E**

medias *https://www.schaeffler.de/std/1F9A*

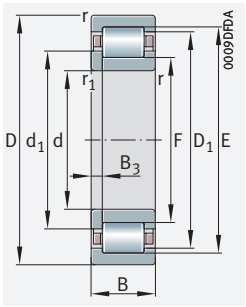

NUP
Locating bearing

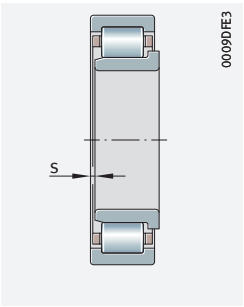

Axial displacement “s”
for NJ

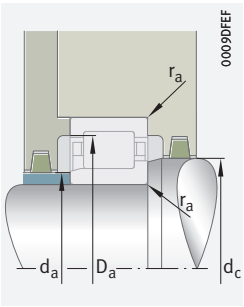

Mounting dimensions
for NJ

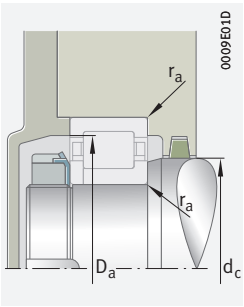

Mounting dimensions
for NUP

Dimensions											Mounting dimensions				
d	r	r_1	s	E	F	D_1	d_1	B_1	B_2	B_3	d_a		d_c	D_a	r_a
	min.	min.				≈	≈				min.[1]	max.	min.	max.[1]	max.
180	4	4	4,7	289	217	278,6	230,2	–	–	–	197	214	233	303	3
	4	4	–	289	217	278,6	230,2	12	20	–	197	–	233	303	3
	4	4	–	289	217	278,6	230,2	–	–	8	197	–	233	303	3
	4	4	7,2	291	215	280	229	–	–	–	197	214	233	303	3
	4	4	–	291	215	280	229	12	24	–	197	–	233	303	3
	4	4	–	291	215	280	229	–	–	12	197	–	233	303	3
	4	4	6,1	–	231	314,2	251,8	–	–	–	197	228	254	363	3
	4	4	–	–	231	314,2	251,8	17	28,5	–	197	–	254	363	3
	4	4	10,5	–	227	316,6	249,4	–	–	–	197	225	250,6	363	3
	4	4	–	–	227	316,6	249,4	17	35	–	197	–	250,6	363	3
190	4	4	4,7	306	230	295	244	–	–	–	207	227	247	323	3
	4	4	–	306	230	295	244	13	21,5	–	207	–	247	323	3
	4	4	–	306	230	295	244	–	–	8,5	207	–	247	323	3
	4	4	8	308	228	296,4	242,7	–	–	–	207	227	247	323	3
	4	4	–	308	228	296,4	242,7	13	26,5	–	207	–	247	323	3
	5	5	11	–	240	336	264	–	–	–	210	237,8	265,3	380	4
	5	5	–	–	240	336	264	18	36,5	–	210	–	265,3	380	4
200	4	4	4,8	323	243	311,5	257,6	–	–	–	217	240	261	343	3
	4	4	–	323	243	311,5	257,6	14	23	–	217	–	261	343	3
	4	4	–	323	243	311,5	257,6	–	–	9	217	–	261	343	3
	4	4	8,2	325	241	312,9	256,3	–	–	–	217	240	261	343	3
	4	4	–	325	241	312,9	256,3	14	28	–	217	–	261	343	3
	5	5	6,3	–	258	347,6	280,4	–	–	–	220	255	282	400	4
	5	5	–	–	258	347,6	280,4	18	30	–	220	–	282	400	4
	5	5	11,3	–	253	352,2	277,8	–	–	–	220	250,7	279	400	4
	5	5	–	–	253	352,2	277,8	18	37	–	220	–	279	400	4

[1] Under axial load, observe the dimensions D_1 and d_1.

Cylindrical roller bearings with cage

Semi-locating bearings, locating bearings

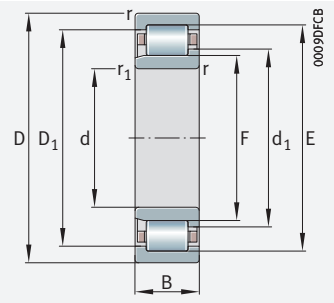

NJ
Semi-locating bearing

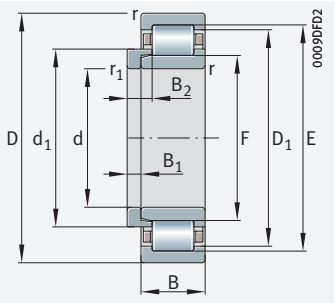

NJ and HJ
Locating bearings

d = 220 – 280 mm

Main dimensions			Basic load ratings		Fatigue limit load	Limiting speed	Speed rating	Mass m		Designation ➤429 | 1.12 ➤430 | 1.13	
d	D	B	dyn. C_r N	stat. C_{0r} N	C_{ur} N	n_G min^{-1}	$n_{\vartheta r}$ min^{-1}	Bearing ≈ kg	L-section ring ≈ kg	Bearing	L-section ring
220	400	65	950 000	1 330 000	152 000	2 600	1 380	38,7	–	**NJ244-E-M1**	–
	400	65	950 000	1 330 000	152 000	2 600	1 380	38,7	3,55	**NJ244-E-M1**	**HJ244-E**
	400	65	950 000	1 330 000	152 000	2 600	1 380	39,3	–	**NUP244-E-M1**	**–**
	400	108	1 630 000	2 370 000	255 000	2 440	1 000	63,4	–	**NUP2244-EX-TB-M1**	**–**
	460	145	2 350 000	3 350 000	350 000	2 110	830	124	–	**NUP2344-EX-TB-M1**	**–**
240	440	72	1 140 000	1 610 000	174 000	2 320	1 220	52,5	–	**NJ248-E-TB-M1**	–
	440	72	1 140 000	1 610 000	174 000	2 320	1 220	52,5	4,6	**NJ248-E-TB-M1**	**HJ248-E**
	500	95	1 720 000	2 280 000	238 000	1 980	1 000	97	–	**NJ348-E-TB-M1**	–
	500	95	1 720 000	2 280 000	238 000	1 980	1 000	97	8,3	**NJ348-E-TB-M1**	**HJ348-E**
260	480	80	1 350 000	1 890 000	195 000	2 100	1 110	69,4	–	**NJ252-E-TB-M1**	–
	480	80	1 350 000	1 890 000	195 000	2 100	1 110	69,4	5,92	**NJ252-E-TB-M1**	**HJ252-E**
280	580	108	2 180 000	3 050 000	295 000	1 700	790	149	–	**NJ356-E-TB-M1**	–
	580	108	2 180 000	3 050 000	295 000	1 700	790	149	13,7	**NJ356-E-TB-M1**	**HJ356-E**

medias *https://www.schaeffler.de/std/1F9A*

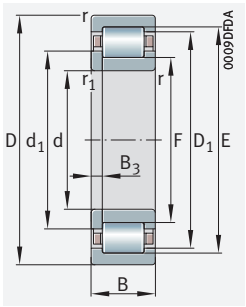

NUP
Locating bearing

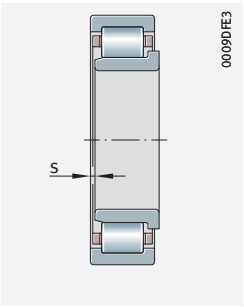

Axial displacement “s”
for NJ

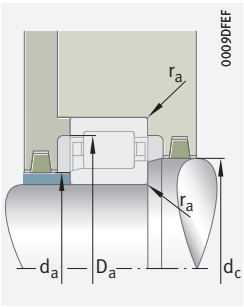

Mounting dimensions
for NJ

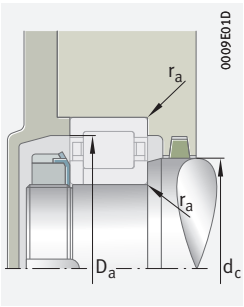

Mounting dimensions
for NUP

Dimensions											Mounting dimensions				
d	r	r_1	s	E	F	D_1	d_1	B_1	B_2	B_3	d_a		d_c	D_a	r_a
	min.	min.				≈	≈				min.[1]	max.	min.	max.[1]	max.
220	4	4	5,5	358	268	344,9	285,2	–	–	–	237	265	288	383	3
	4	4	–	358	268	344,9	285,2	15	25	–	237	–	288	383	3
	4	4	–	358	268	344,9	285,2	–	–	10	237	–	288	383	3
	4	4	–	367	259	345,4	280,6	–	–	14	237	–	282,3	383	3
	5	5	–	413	277	385,8	304,2	–	–	20	240	–	305,1	440	4
240	4	4	6	–	293	373	313	–	–	–	257	290	315	423	3
	4	4	–	–	293	373	313	16	27	–	257	–	315	423	3
	5	5	7,4	–	306	414,8	333,2	–	–	–	260	303	335	480	4
	5	5	–	–	306	414,8	333,2	22	35,5	–	260	–	335	480	4
260	5	5	6,2	–	317	406,6	339,7	–	–	–	280	314	341	460	4
	5	5	–	–	317	406,6	339,7	18	30	–	280	–	341	460	4
280	6	6	8,7	–	362	482	392	–	–	–	306	359	393,4	554	5
	6	6	–	–	362	482	392	26	42,5	–	306	–	393,4	554	5

[1] Under axial load, observe the dimensions D_1 and d_1.

2 Cylindrical roller bearings with disc cage or with spacers

Cylindrical roller bearings with disc cage/with spacers are suitable where:

- bearing arrangements are subjected to very high radial loads and higher speeds occur ➤*484|2.2*, ➤*488|2.6*
- high dynamic inertia forces are present
- not only high radial forces but also axial loads from one direction must be supported by the bearing position (semi-locating bearing function) ➤*484|2.2*
- high shock loads occur
- thermally stable conditions are required in the bearing even at higher speeds
- the cages are subjected to high dynamic inertia forces; e.g. in vibratory machinery
- axial displacements of the shaft relative to the housing must be compensated without constraint in the bearing
- the bearings should be separable for easier mounting; in vibratory machinery, for example, the bearing ring with circumferential load as well as the ring with point load should have a tight fit ➤*482|2.1*, ➤*496|2.17*

For an overview of other product-specific features, see the Matrix for bearing preselection ➤*414*.

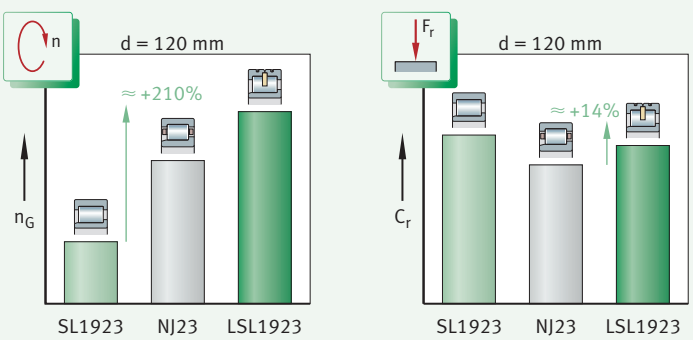

1 *Cylindrical roller bearing with full complement bearing/standard cage/disc cage, comparison of speed and load carrying capacity*

n_G = *limiting speed*
C_r = *basic dynamic load rating*
SL1923 = *full complement cylindrical roller bearing*
NJ23 = *cylindrical roller bearing with standard cage*
LSL1923 = *cylindrical roller bearing with disc cage*

2.1 Bearing design

✎ *Design variants*

These cylindrical roller bearings are available as:

- type LSL1923 (bearing with disc cage) ➤*483|2*
- type ZSL1923 (bearing with spacers) ➤*483|3*
- special design for vibratory machinery ➤*484*
- X-life bearings ➤*484*

Basic design – standard range

✎ *LSL1923 and ZSL1923 correspond to dimension series 23*

Cylindrical roller bearings with disc cage or with spacers are part of the group of radial roller bearings and correspond to dimension series 23. These single row bearings comprise radially split or unsplit outer rings, removable inner rings, disc cages or spacers and cylindrical rollers. The rollers have profiled ends, i. e. they have a slight lateral curvature towards the ends. This modified line contact between the rolling elements and raceways prevents damaging edge stresses ➤*417*|*2*.
For mounting of the bearings, the inner ring can be removed.

Series LSL1923 – bearings with disc cage

✎ *Bearings with semi-locating bearing function*

Cylindrical roller bearings LSL1923 have two rigid ribs on the outer ring and one rigid rib on the inner ring. An externally-guided flat brass disc cage prevents the rolling elements from coming into contact with each other during rolling ➤*483*|*2* and ➤*490*|*2.9*. The disc cage has pockets in which the rolling elements run. The rollers are guided between the ribs on the outer ring. The outer ring is axially split and held together by fasteners. Due to their design configuration, the bearings permit axial displacements of the shaft relative to the housing in one direction. In the opposite direction, they act as locating bearings. The maximum axial displacement s is given in the product tables.

2
Cylindrical roller bearing with disc cage

F_r = *radial load*
F_a = *axial load*
① *Brass disc cage*

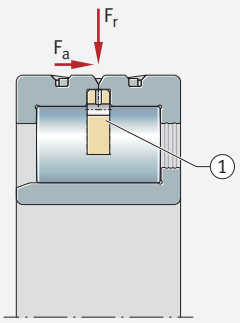

0009CA72

Series ZSL1923 – bearings with spacers

✎ *Bearings with semi-locating bearing function*

In the case of cylindrical roller bearings ZSL1923, plastic spacers prevent the rollers from coming into contact with each other during rolling ➤*483*|*3* and ➤*490*|*2.9*. The spacers are guided axially between the ribs on the outer ring. They are designed such that the rolling element set is self-retaining, so the outer ring with the rolling element set and the inner ring can be mounted separately from each other. Due to their design configuration, the bearings permit axial displacements of the shaft relative to the housing in one direction. In the opposite direction, they act as locating bearings. The maximum axial displacement s is given in the product tables.

3
Cylindrical roller bearing with spacers

F_r = *radial load*
F_a = *axial load*
① *Plastic spacers*

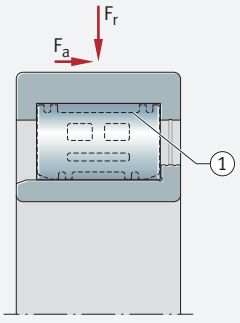

0009CA73

Special design of bearings LSL and ZSL for vibratory machinery

In addition to high basic dynamic load ratings C_r (and thus long rating life values), bearings for vibratory machinery must also be able to compensate or support considerable shaft tilting due to load or misalignment. The cylindrical roller bearings LSL and ZSL are therefore also available by agreement in the BIR design ➤492|▦4.
In these bearings, the inner ring raceway is ground slightly spherical.

X-life premium quality

Many sizes of the bearings are also available as X-life bearings. These bearings exhibit considerably higher performance than comparable standard cylindrical roller bearings. This is achieved, for example, through the modified internal construction, the optimised contact geometry between the rollers and raceways, better surface quality and the optimised roller guidance and lubricant film formation.

✎ Increased customer benefits due to X-life

These technical enhancements offer a range of advantages, such as:

- a more favourable load distribution in the bearing and thus a higher dynamic load carrying capacity of the bearings
- a higher fatigue limit load
- lower heat generation in the bearing
- lower lubricant consumption and therefore longer maintenance intervals if relubrication is carried out
- a measurably longer operating life of the bearings
- high operational security
- compact, environmentally-friendly bearing arrangements

✎ Interchangeable with comparable standard bearings

Since X-life cylindrical roller bearings have the same dimensions as the corresponding standard bearings, the latter can be replaced without any problems by the higher-performance X-life bearings. The major advantages of X-life can therefore also be used for existing bearing arrangements with standard bearings.

✎ Lower operating costs, higher machine availability

In conclusion, these advantages improve the overall cost-efficiency of the bearing position significantly and thus bring about a sustainable increase in the efficiency of the machine and equipment.

✎ Suffix XL

X-life cylindrical roller bearings include the suffix XL in the designation ➤492|2.12 and ➤498|▦.

X-life indicates a high product performance density and thus a particularly significant benefit to the customer. Further information on X-life ➤10.

2.2 Load carrying capacity

✎ Designed for high radial loads

Cylindrical roller bearings LSL and ZSL are used as semi-locating bearings. These bearings can support not only high radial forces but also axial loads in one direction; i.e. they can guide the shaft axially in one direction. Furthermore, they can withstand high shock loads, vibrations and accelerations.

✎ Higher basic dynamic load ratings lead to an increase in basic rating life

Due to the internal construction, the bearings can acommodate more rolling elements than conventional cylindrical roller bearings. As a result, there is a significant increase in the basic dynamic and static load rating and thus the basic rating life compared with conventional cylindrical roller bearings. ➤485|⧉4 shows a comparison of the basic dynamic load rating C_r between a cylindrical roller bearing NJ2324 with a conventional cage, a bearing with a disc cage and a bearing with spacers.
The advantage in basic dynamic load rating of approx. 14% gives an increase in the basic rating life of approx. 55% ➤485|⧉5.

4
Comparison of basic dynamic load ratings – conventional cylindrical roller bearing NJ2324 with LSL192324 and ZSL192324

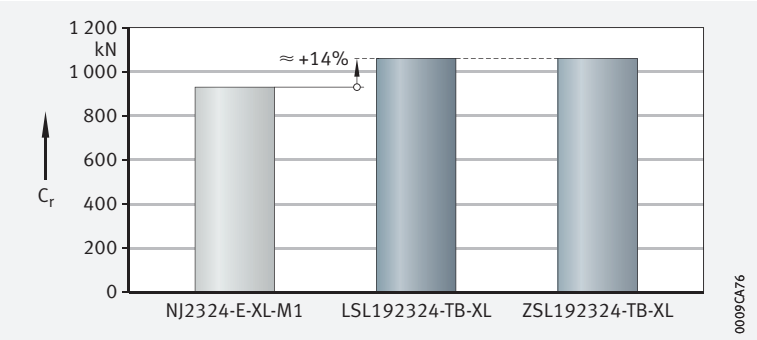

5
Comparison of basic percentage rating life – conventional cylindrical roller bearing NJ2324 with LSL192324 and ZSL192324

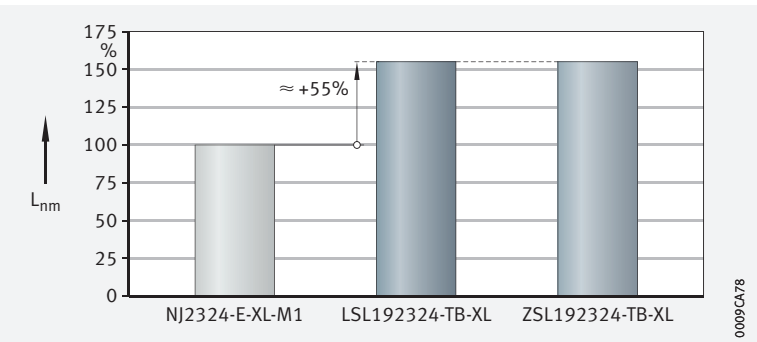

Higher axial load carrying capacity of bearings with toroidal crowned roller end face

Neither wear nor fatigue occurs on the rib contact running and roller end faces

In the case of cylindrical roller bearings with toroidal crowned rollers (TB design), the axial load carrying capacity has been significantly improved with the aid of new calculation and manufacturing methods. A special curvature of the roller end faces facilitates optimum contact conditions between the rollers and ribs ➤485|6. As a result, the axial contact pressures on the rib are significantly minimised and a lubricant film capable of supporting higher loads is formed. Under standard operating conditions, this completely eliminates wear and fatigue at the rib contact running and roller end faces. In addition, the frictional torque is reduced by up to 50%. The bearing temperature during operation is therefore significantly lower. Bearings of the toroidal crowned design are available for a bore diameter of, or larger than, d = 90 mm ➤498|.

6
Contact geometry of roller end face/rib face – modified roller end faces

① *Cylindrical roller with inner ring*
② *Detail (representation not to scale)*
③ *End of roller*
④ *Rib*

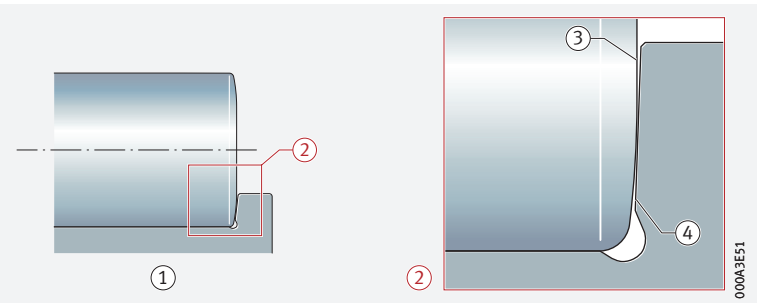

Load ratio F_a/F_r

Ratio $F_a/F_r \leqq 0,4$ or 0,6

The bearings can support axial loads on one side by means of the ribs on the inner and outer ring. In order to ensure problem-free running (tilting of the rollers is prevented), they must always be subjected to radial load at the same time as axial load. The ratio F_a/F_r must not exceed the value 0,4. For bearings with toroidal crowned roller ends (TB design), values up to 0,6 are permissible.

The load F_r describes the radial load for a single row bearing. For multi-row bearings, F_r must be divided by the number of rows.

Continuous axial loading without simultaneous radial loading is not permissible.

Permissible axial load

Influencing factors on the axial load carrying capacity

Axial loads are supported by the bearing ribs and the roller end faces ➤*486*|*7* and ➤*496*|*13*. The axial load carrying capacity of the bearing is therefore essentially dependent on:

- the size of the sliding surfaces between the ribs and the end faces of the rolling elements
- the sliding velocity at the ribs
- the lubrication of the contact surfaces
- tilting of the bearing
- friction

7
Force flow under axial load – semi-locating bearing LSL1923

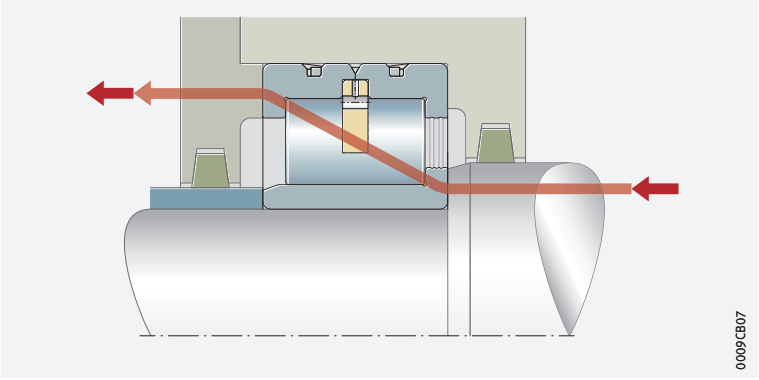

Calculation of permissible axial load – cylindrical rollers with conventional roller ends

Bearings with standard roller ends

The permissible axial load $F_{a\,per}$ can be calculated from the hydrodynamic load carrying capacity of the contact ➤*486*|*1*.

1
Permissible axial load – bearings of standard design

$$F_{a\,per} = k_S \cdot k_B \cdot d_M^{\,1,54} \cdot n^{-0,6} \leqq F_{a\,max}$$

Legend

$F_{a\,per}$	N	Permissible continuous axial load. In order to prevent unacceptably high temperatures in the bearing, $F_{a\,per}$ must not be exceeded
$F_{a\,max}$	N	Maximum continuous axial load in relation to rib fracture. In order to prevent unacceptably high pressures at the contact surfaces, $F_{a\,max}$ must not be exceeded
k_S	–	Factor as a function of lubrication method ➤*486*|*1*. The factor takes into consideration the lubrication method used for the bearing. The better the lubrication and, in particular, the heat dissipation, the higher the permissible axial load
k_B	–	Factor as a function of the bearing series, $k_B = 28$
d_M	mm	Mean bearing diameter $d_M = (D + d)/2$ ➤*498*
n	min^{-1}	Operating speed.

1
Factor k_S

Lubrication method	Factor k_S	
	from	up to
Minimal heat dissipation, drip feed oil lubrication, oil mist lubrication, low operating viscosity ($\nu < 0,5 \cdot \nu_1$)	7,5	10
Poor heat dissipation, oil sump lubrication, oil spray lubrication, low oil flow	10	15
Good heat dissipation, recirculating oil lubrication (pressurised oil lubrication)	12	18
Very good heat dissipation, recirculating oil lubrication with oil cooling, high operating viscosity ($\nu > 2 \cdot \nu_1$)	16	24

The precondition for these k_S values is an operating viscosity of the lubricant of at least the reference viscosity ν_1 in accordance with DIN ISO 281:2010.

Doped lubricating oils should be used, such as CLP (DIN 51517) and HLP (DIN 51524) of ISO VG grades 32 to 460, as well as ATF oils (DIN 51502) and transmission oils (DIN 51512) of SAE viscosity grades 75W to 140W.

Calculation of permissible axial load – cylindrical rollers with toroidal roller ends

Higher axial loads possible

For bearings with toroidal roller ends, the permissible axial loads are 50% higher ➤487| 2.

2
Permissible axial load – bearings of TB design

$$F_{a\,per} = 1{,}5 \cdot k_S \cdot k_B \cdot {d_M}^{1{,}54} \cdot n^{-0{,}6} \leqq F_{a\,max}$$

Calculation of maximum permissible axial load

For bearings with rollers of the standard or TB design, the maximum permissible axial load $F_{a\,max}$ ➤487| 3 is calculated from the rib strength and the security against wear. This must not be exceeded, even if $F_{a\,per}$ gives higher values ➤487| 4.

3
Maximum axial load – bearings of standard and TB design

$$F_{a\,max} = 0{,}075 \cdot k_B \cdot {d_M}^{2{,}1}$$

4
Permissible axial load

$$F_{a\,per} \leqq F_{a\,max}$$

Axial load under shaft deflection

Permissible axial load under shaft deflection of up to 2′

Under considerable shaft deflection, the shaft shoulder presses against the inner ring rib. In combination with the active axial load, this can lead to high alternating loading of the inner ring ribs. Under a shaft deflection of up to 2′, the permissible axial load can be estimated ➤487| 5.

If more severe tilting is present, a separate strength analysis is required. In this case, please contact Schaeffler.

5
Axial load under misalignment

$$F_{as} = 20 \cdot {d_M}^{1{,}42}$$

Legend

F_{as}	N	Permissible axial load under misalignment.

2.3 Compensation of angular misalignments

Angular deviations are misalignments between the inner and outer ring

The permissible misalignment between the inner ring and outer ring is influenced by the internal bearing construction, the operating clearance, the forces acting on the bearings etc. Due to these complex relationships, it is not possible to give generally valid absolute values here.
However, misalignments (angular deviations) between the inner ring and outer ring will generally always have an effect on the running noise and the operating life of the bearings.

Permissible tilting

The permissible guide value at which, based on experience, there is no significant reduction in operating life is 3′.

Scope of value

The value applies to:

- bearing arrangements with static misalignment (consistent position of the shaft and housing axis)
- bearings that are not required to perform an axial guidance function
- bearings subjected to small loads (with $C_{0r}/P \geqq 5$)

Checking by means of the calculation program BEARINX is recommended in all cases. If there is any uncertainty regarding possible misalignment, please consult Schaeffler.

2.4 Lubrication

Oil or grease lubrication is possible

The cylindrical roller bearings are not greased. They must be lubricated with oil or grease.

Pay attention to the compatibility of the lubricant with plastic

When using bearings with plastic spacers, compatibility between the lubricant and the cage material must be ensured if synthetic oils, lubricating greases with a synthetic oil base or lubricants containing a high proportion of EP additives are used.

If there is any uncertainty regarding the suitability of the selected lubricant for the application, please consult Schaeffler or the lubricant manufacturer.

Observe oil change intervals

Aged oil and additives in the oil can impair the operating life of plastics at high temperatures. As a result, stipulated oil change intervals must be strictly observed.

2.5 Sealing

Provide seals in the adjacent construction

The bearings are not sealed, i.e. sealing of the bearing position must be carried out in the adjacent construction. This must reliably prevent:

- moisture and contaminants from entering the bearing
- the egress of lubricant from the bearing

2.6 Speeds

Speeds in the product tables

The product tables generally give two speeds for the bearings:

- the kinematic limiting speed n_G
- the thermal speed rating $n_{\vartheta r}$

Limiting speeds

The limiting speed n_G is the kinematically permissible speed of the bearing. Even under favourable mounting and operating conditions, this value should not be exceeded without prior consultation with Schaeffler ➤64.

Bearings with solid brass cages have a significantly higher limiting speed for oil lubrication.

Values for grease lubrication

For the grease lubrication of bearings without seals or shields, 85% of the value stated in the product tables is permissible in each case.

For the grease lubrication of bearings with solid brass cages, 65% of the value stated in the product tables is permissible in each case.

Reference speeds

$n_{\vartheta r}$ is used to calculate n_ϑ

The thermal speed rating $n_{\vartheta r}$ is not an application-oriented speed limit, but is a calculated ancillary value for determining the thermally safe operating speed n_ϑ ➤64.

2.7 Noise

The Schaeffler Noise Index (SGI) has been developed as a new feature for comparing the noise level of different bearing types and series. As a result, a noise evaluation of rolling bearings can now be carried out for the first time.

Schaeffler Noise Index

The SGI value is based on the maximum permissible noise level of a bearing in accordance with internal standards, which is calculated on the basis of ISO 15242. In order that different bearing types and series can be compared, the SGI value is plotted against the basic static load rating C_0.

This permits direct comparisons between bearings with the same load carrying capacity. The upper limit value is given in each of the diagrams. This means that the average noise level of the bearings is lower than illustrated in the diagram.

The Schaeffler Noise Index is an additional performance characteristic in the selection of bearings for noise-sensitive applications. The specific suitability of a bearing for an application in terms of installation space, load carrying capacity or speed limit for example, must be checked independently of this.

The Noise Index is currently available for the main series. Additional series will be updated and introduced in subsequent publications.

Further information:

- ***medias*** *https://medias.schaeffler.com*

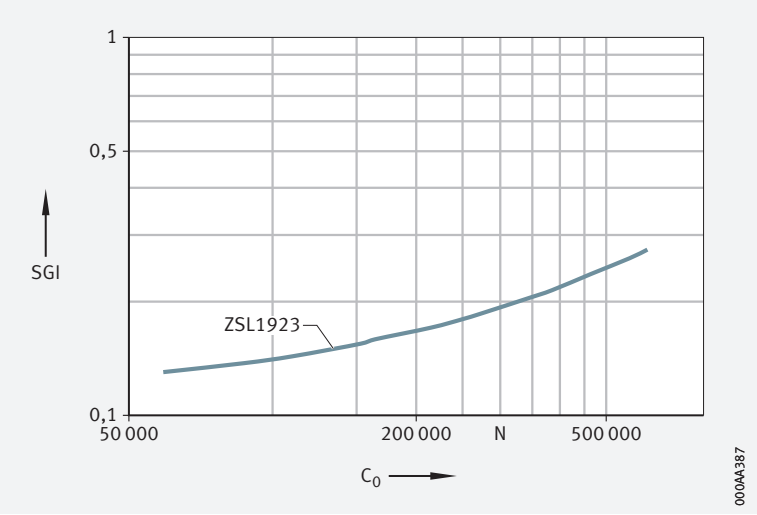

8 *Schaeffler Noise Index for cylindrical roller bearings with spacers*

SGI = *Schaeffler Noise Index*
C_0 = *basic static load rating*

2.8 Temperature range

✎ *Limiting values*

The operating temperature of the bearings is limited by:

- the dimensional stability of the bearing rings and cylindrical rollers
- the cage (disc cage or spacers)
- the lubricant

Possible operating temperatures of bearings ➤ *490* | ▦ *2*.

▦ **2**
Permissible temperature ranges

Operating temperature	Cylindrical roller bearings with disc cage or with spacers
	–30 °C to +120 °C

In the event of anticipated temperatures which lie outside the stated values, please contact Schaeffler.

2.9 Cages

✎ *Bearings with a disc cage or spacers are suitable for applications with high dynamic inertia forces*

In addition to the actual task of a bearing cage, which is to hold rolling elements apart from each other, a cage designed for vibrations (e. g. for use in vibratory machinery) must be able to support, on a fatigue-resistant basis, principally the inertia forces that act on the cage due to its own mass, as well as the inertia forces of the rolling elements that act directly on the cage pockets. Since these applications also call for very high basic load ratings, conventional cages can only support this requirement under very limited conditions. As a result, bearings with a brass disc cage or plastic spacers have been developed, which constitute a transition from full complement bearings to conventional cage bearings.

Disc cage

✎ *Rolling elements are held by the cage*

This cage is designed as a flat disc ➤ *490* | 🗀 *9*. Facing towards the inside diameter are rolling element pockets that support the rolling elements. The cage inside diameter is extended downwards to below the pitch circle line. This gives retention of the rolling elements, i. e. the inner ring can be mounted separately from the rest of the bearing. Facing the outside diameter, the disc cage is seated concentrically between the ribs in a slot in the outer ring.

🗀 **9**
Rollers and solid brass disc cage

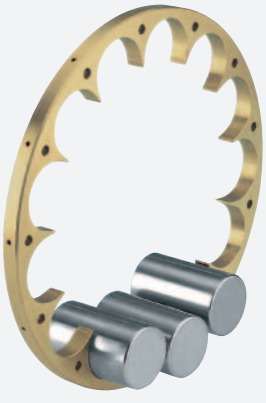

Spacers

Lower bearing frictional torque due to the geometry of the spacers

The plastic spacers were developed specially for the series ZSL1923 ➤*491*|*10*. They are designed such that the rolling element set is self-retaining, i. e. the bearing and inner ring can be mounted separately from each other.

10
Rollers and plastic spacers

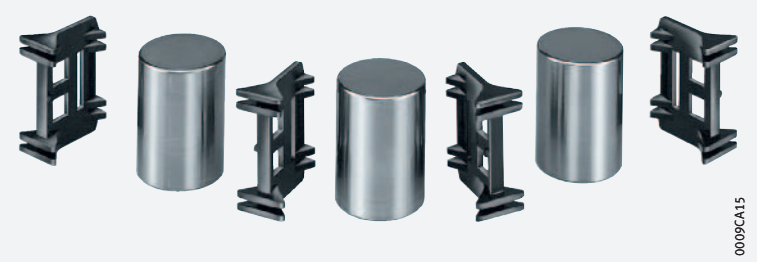

2.10 Internal clearance

Radial internal clearance

The standard is CN

As standard, cylindrical roller bearings with disc cage or with spacers have the radial internal clearance CN (normal) ➤*491*|*3*. CN is not stated in the designation.

When used in vibratory machinery, both bearing rings have a tight fit. As a result, and due to the temperature differential between the inner ring and outer ring, the internal clearance C4 is generally necessary.
As standard, bearings for vibratory machinery therefore have this internal clearance group.

Certain sizes are also available by agreement with the larger internal clearance C3, C4 and C5 ➤*491*|*3*.

The values for radial internal clearance correspond to DIN 620-4:2004 (ISO 5753-1:2009) ➤*491*|*3*. They are valid for bearings which are free from load and measurement forces (without elastic deformation).

3
Radial internal clearance of cylindrical roller bearings with disc cage or with spacers

Nominal bore diameter d mm		Radial internal clearance							
		CN (Group N) µm		C3 (Group 3) µm		C4 (Group 4) µm		C5 (Group 5) µm	
over	incl.	min.	max.	min.	max.	min.	max.	min.	max.
–	24	20	45	35	60	50	75	65	90
24	30	20	45	35	60	50	75	70	95
30	40	25	50	45	70	60	85	80	105
40	50	30	60	50	80	70	100	95	125
50	65	40	70	60	90	80	110	110	140
65	80	40	75	65	100	90	125	130	165
80	100	50	85	75	110	105	140	155	190
100	120	50	90	85	125	125	165	180	200
120	140	60	105	100	145	145	190	200	245
140	160	70	120	115	165	165	215	225	275
160	180	75	125	120	170	170	220	250	300
180	200	90	145	140	195	195	250	275	330
200	225	105	165	160	220	220	280	305	365
225	250	110	175	170	235	235	300	330	395
250	280	125	195	190	260	260	330	370	440
280	315	130	205	200	275	275	350	410	485

2.11 Dimensions, tolerances

Dimension standards

The main dimensions of cylindrical roller bearings correspond to ISO 15:2017 (DIN 616:2000 and DIN 5412-1:2005).

Chamfer dimensions

The limiting dimensions for chamfer dimensions correspond to DIN 620-6:2004. Overview and limiting values ➤*137*|*7.11*.
Nominal value of chamfer dimension ➤*498*|▦.

Tolerances

The dimensional and running tolerances correspond to the tolerance class Normal in accordance with ISO 492:2014.
Tolerance values in accordance with ISO 492 ➤*124*|▦*8*.

2.12 Suffixes

Suffixes describe the design and features of a bearing in more detail.

▦**4** *Suffixes and corresponding descriptions*

Suffix	Description of suffix	
BIR	Inner ring raceway ground slightly spherical	Available by agreement
BR	Black oxide coated	
C3	Radial internal clearance C3 (larger than normal)	
C4	Radial internal clearance C4 (larger than C3)	
C5	Radial internal clearance C5 (larger than C4)	
TB	Bearing with increased axial load carrying capacity	Standard dependent on bearing size
XL	X-life bearing	

2.13 Structure of bearing designation

With ***medias*** interchange, equivalent Schaeffler bearing designations can be determined for bearing designations from other rolling bearing manufacturers *https://www.schaeffler.de/std/1B69*.

✎ *Examples of composition of bearing designation*

The designation of bearings follows a set model. Examples ➤*492*|🗀*11* and ➤*492*|🗀*12*. The composition of designations is subject to DIN 623-1 ➤*102*|🗀*10*.

🗀**11** *Cylindrical roller bearing with disc cage: designation structure*

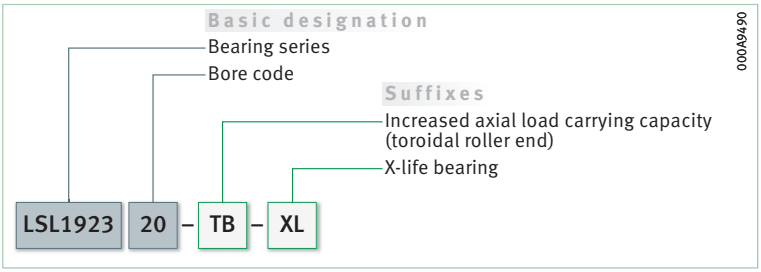

🗀**12** *Cylindrical roller bearing with spacers, internal clearance C3: designation structure*

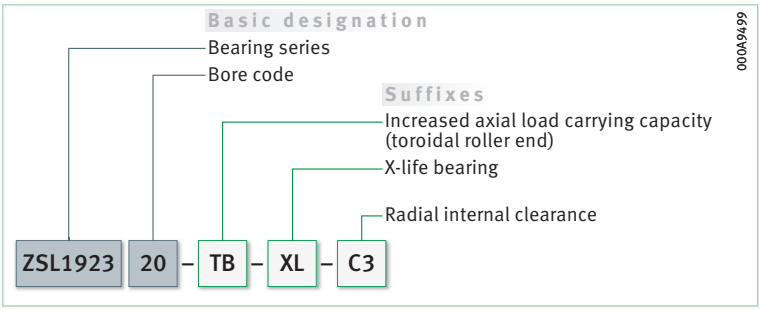

2.14 Dimensioning

Equivalent dynamic bearing load

✎ *$P = F_r$ under purely radial load of constant magnitude and direction*

The basic rating life equation $L = (C_r/P)^p$ used in the dimensioning of bearings under dynamic load assumes a load of constant magnitude and direction. In radial bearings, this is a purely radial load F_r. If this condition is met, the bearing load F_r is used in the rating life equation for P ($P = F_r$).

Cylindrical roller bearings with non-locating bearing function

✎ *$P = F_r$*

Non-locating bearings can only support radial loads. For these bearings ➤*493*| *f 6*.

f 6
Equivalent dynamic load

$$P = F_r$$

Cylindrical roller bearings with semi-locating or locating bearing function

✎ *P is a substitute force for combined load and various load cases*

If the condition described above is not met, i. e. if, in addition to the radial force F_r, there is also an axial force F_a, a constant radial force must first be determined for the rating life calculation that (in relation to the rating life) represents an equivalent load. This force is known as the equivalent dynamic bearing load P.

✎ *$F_a/F_r \leqq e$ or $F_a/F_r > e$*

The calculation of P is dependent on the load ratio F_a/F_r and the calculation factors e and Y ➤*493*| *f 7* and ➤*493*| *f 8*.

f 7
Equivalent dynamic load

$$\frac{F_a}{F_r} \leqq e \quad \Rightarrow \quad P = F_r$$

f 8
Equivalent dynamic load

$$\frac{F_a}{F_r} > e \quad \Rightarrow \quad P = 0{,}92 \cdot F_r + Y \cdot F_a$$

Legend

P	N	Equivalent dynamic bearing load
F_r	N	Radial load
F_a	N	Axial load
e	–	Factor, e = 0,3
Y	–	Factor, Y = 0,4.

Equivalent static bearing load

✎ *$P_0 = F_{0r}$*

For cylindrical roller bearings subjected to static load ➤*493*| *f 9*.

f 9
Equivalent static load

$$P_0 = F_{0r}$$

Legend

P_0	N	Equivalent static bearing load
F_{0r}	N	Largest radial load present (maximum load).

Static load safety factor

✎ *$S_0 = C_0/P_0$*

In addition to the basic rating life L (L_{10h}), it is also always necessary to check the static load safety factor S_0 ➤*493*| *f 10*.

f 10
Static load safety factor

$$S_0 = \frac{C_0}{P_0}$$

Legend

S_0	–	Static load safety factor
C_0	N	Basic static load rating
P_0	N	Equivalent static bearing load.

2.15 Minimum load

In order to prevent damage due to slippage, a minimum radial load of $P > C_{0r}/60$ is necessary during continuous operation

In order that no slippage occurs between the contact partners, the cylindrical roller bearings must be constantly subjected to a sufficiently high radial load. For continuous operation, experience shows that a minimum radial load of the order of $P > C_{0r}/60$ is thus necessary. In most cases, however, the radial load is already higher than the requisite minimum load due to the weight of the supported parts and the external forces.

If the minimum radial load is lower than indicated above, please consult Schaeffler.

2.16 Design of bearing arrangements

Support bearing rings over their entire circumference and width

In order to allow full utilisation of the load carrying capacity of the bearings and achieve the requisite rating life, the bearing rings must be rigidly and uniformly supported by means of contact surfaces over their entire circumference and over the entire width of the raceway. Support can be provided by means of a cylindrical seating surface. The seating and contact surfaces should not be interrupted by grooves, holes or other recesses. The accuracy of mating parts must meet specific requirements ➤*495*|▦ *5* to ➤*495*|▦ *7*.

Radial location

For secure radial location, tight fits are necessary

In addition to supporting the rings adequately, the bearings must also be securely located in a radial direction, to prevent creep of the bearing rings on the mating parts under load. This is generally achieved by means of tight fits between the bearing rings and the mating parts. If the rings are not secured adequately or correctly, this can cause severe damage to the bearings and adjacent machine parts. Influencing factors, such as the conditions of rotation, magnitude of the load, internal clearance, temperature conditions, design of the mating parts and the mounting and dismounting options must be taken into consideration in the selection of fits.

If shock type loads occur, tight fits (transition fit or interference fit) are required to prevent the rings from coming loose at any point. Clearance, transition or interference fits ➤*152*|▦ *6* and ➤*160*|▦ *7*.

The following information provided in Technical principles must be taken into consideration in the design of bearing arrangements:

- criteria for selection of fits ➤*146*
- conditions of rotation ➤*147*
- tolerance classes for cylindrical shaft seats (radial bearings) ➤*149*|▦ *2*
- shaft fits ➤*152*|▦ *6*
- tolerance classes for bearing seats in housings (radial bearings) ➤*150*|▦ *4*
- housing fits ➤*160*|▦ *7*

Axial location

The bearings must also be securely located in an axial direction

As a tight fit alone is not normally sufficient to also locate the bearing rings securely on the shaft and in the housing bore in an axial direction, this must usually be achieved by means of an additional axial location or retention method. The axial location of the bearing rings must be matched to the type of bearing arrangement. Shaft and housing shoulders, housing covers, nuts, spacer rings, retaining rings, adapter and withdrawal sleeves etc., are fundamentally suitable; example ➤*496*|◻ *13*.

Dimensional, geometrical and running accuracy of cylindrical bearing seats

A minimum of IT6 should be provided for the shaft seat and a minimum of IT7 for the housing seat

The accuracy of the cylindrical bearing seat on the shaft and in the housing should correspond to the accuracy of the bearing used. For cylindrical roller bearings with the tolerance class Normal, the shaft seat should correspond to a minimum of standard tolerance grade IT6 and the housing seat to a minimum of IT7. Guide values for the geometrical and positional tolerances of the bearing seating surfaces ➤495|▦5. Tolerances t_1 to t_3 in accordance with ➤170|⧉11. Numerical values for IT grades ➤495|▦6.

▦5 *Guide values for the geometrical and positional tolerances of bearing seating surfaces*

Bearing tolerance class		Bearing seating surface	Standard tolerance grades to ISO 286-1 (IT grades)			
to ISO 492	to DIN 620		Diameter tolerance	Roundness tolerance t_1	Parallelism tolerance t_2	Total axial runout tolerance of abutment shoulder t_3
Normal	PN (P0)	Shaft	IT6 (IT5)	Circumferential load IT4/2	Circumferential load IT4/2	IT4
				Point load IT5/2	Point load IT5/2	
		Housing	IT7 (IT6)	Circumferential load IT5/2	Circumferential load IT5/2	IT5
				Point load IT6/2	Point load IT6/2	

▦6 *Numerical values for ISO standard tolerances (IT grades) to ISO 286-1:2010*

IT grade	Nominal dimension in mm						
	over **18**	**30**	**50**	**80**	**120**	**180**	**250**
	incl. **30**	**50**	**80**	**120**	**180**	**250**	**315**
	Values in µm						
IT4	6	7	8	10	12	14	16
IT5	9	11	13	15	18	20	23
IT6	13	16	19	22	25	29	32
IT7	21	25	30	35	40	46	52

Roughness of cylindrical bearing seating surfaces

Ra must not be too high

The roughness of the bearing seats must be matched to the tolerance class of the bearings. The mean roughness value Ra must not be too high, in order to maintain the interference loss within limits. The shafts must be ground, while the bores must be precision turned. Guide values as a function of the IT grade of bearing seating surfaces ➤495|▦7.

▦7 *Roughness values for cylindrical bearing seating surfaces – guide values*

Nominal diameter of the bearing seat d (D) mm		Recommended mean roughness value for ground bearing seats Ramax µm			
		Diameter tolerance (IT grade)			
over	incl.	IT7	IT6	IT5	IT4
–	80	1,6	0,8	0,4	0,2
80	500	1,6	1,6	0,8	0,4

Mounting dimensions for the contact surfaces of bearing rings

The contact surfaces for the rings must be of sufficient height

The mounting dimensions of the shaft and housing shoulders, and spacer rings etc., must ensure that the contact surfaces for the bearing rings are of sufficient height. The transition from the bearing seat to the abutment shoulder must be designed with rounding to DIN 5418:1993 or an undercut to DIN 509:2006. Proven mounting dimensions for the radii and diameters of abutment shoulders are given in the product tables ➤*498*|▦ and ➤*496*|⧉ *13*. These dimensions are limiting dimensions (maximum or minimum dimensions); the actual values should not be higher or lower than specified.

Rib support in axially loaded bearings

Ribs under axial load must be supported over their entire height and entire circumference. The size and axial runout accuracy of the contact surfaces on the inner ring rib must be observed especially in the case of cylindrical roller bearings subjected to high loads, since these factors also influence the uniformity of the rib load and the running accuracy of the shaft. This means that the ribs may be subjected to damaging alternating stresses even in the case of very small misalignments.
If the mounting dimensions indicated in the product tables are observed, the problems described can be reliably avoided ➤*496*|⧉ *13* and ➤*498*|▦.

Support in semi-locating bearings

In semi-locating bearings, it is sufficient to support the bearing rings on one side, on the rib supporting the axial load ➤*496*|⧉ *13*.

⧉ ***13***
Support of the inner ring rib – bearing with disc cage LSL 1923 (semi-locating bearing)

d_c = *recommended height of shaft shoulder with axially loaded rib*
Arrow = *force flow*

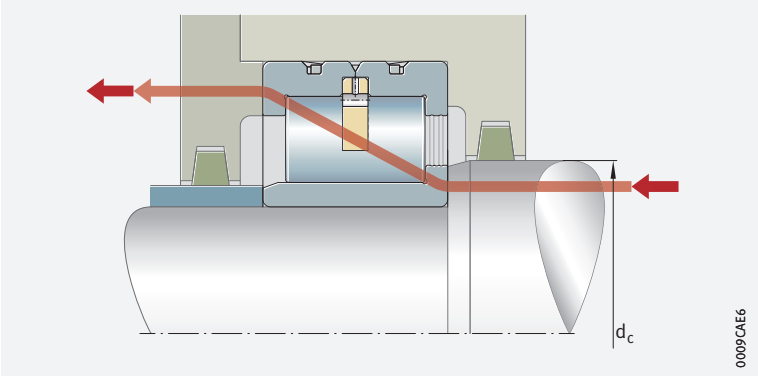

2.17 Mounting and dismounting

The mounting and dismounting options for cylindrical roller bearings, by thermal, hydraulic or mechanical methods, must be taken into consideration in the design of the bearing position.

As the bearings are not self-retaining, they are easy to mount

The cylindrical roller bearings LSL 1923 and ZSL 1923 are not self-retaining. As a result, the bearing parts can be mounted separately from each other ➤*482*|*2.1*. This gives simplified mounting of the bearings, especially when the two bearing rings have a tight fit.

Schaeffler Mounting Handbook

Rolling bearings must be handled with great care

Rolling bearings are well-proven precision machine elements for the design of economical and reliable bearing arrangements, which offer high operational security. In order that these products can function correctly and achieve the envisaged operating life without detrimental effect, they must be handled with care.

The Schaeffler Mounting Handbook MH 1 gives comprehensive information about the correct storage, mounting, dismounting and maintenance of rotary rolling bearings *https://www.schaeffler.de/std/1D53*.
It also provides information which should be observed by the designer, in relation to the mounting, dismounting and maintenance of bearings, in the original design of the bearing position. This book is available from Schaeffler on request.

2.18 Legal notice regarding data freshness

✎ The further development of products may also result in technical changes to catalogue products

Of central interest to Schaeffler is the further development and optimisation of its products and the satisfaction of its customers. In order that you, as the customer, can keep yourself optimally informed about the progress that is being made here and with regard to the current technical status of the products, we publish any product changes which differ from the printed version in our electronic product catalogue.

§ We therefore reserve the right to make changes to the data and illustrations in this catalogue. This catalogue reflects the status at the time of printing. More recent publications released by us (as printed or digital media) will automatically precede this catalogue if they involve the same subject. Therefore, please always use our electronic product catalogue to check whether more up-to-date information or modification notices exist for your desired product.

Link to electronic product catalogue

The following link will take you to the Schaeffler electronic product catalogue: *https://medias.schaeffler.com*.

2.19 Further information

In addition to the data in this chapter, the following chapters in Technical principles must also be observed in the design of bearing arrangements:

- Determining the bearing size ➤*34*
- Rigidity ➤*54*
- Friction and increases in temperature ➤*56*
- Speeds ➤*64*
- Bearing data ➤*97*
- Lubrication ➤*70*
- Sealing ➤*185*
- Design of bearing arrangements ➤*141*
- Mounting and dismounting ➤*194*

Cylindrical roller bearings with disc cage

Semi-locating bearings

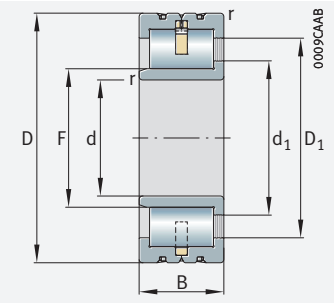

LSL 1923

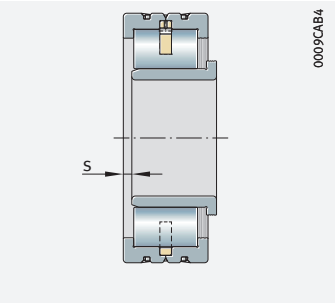

Axial displacement “s”

d = 80 – 300 mm

Main dimensions			Basic load ratings		Fatigue limit load	Limiting speed	Speed rating	Mass	Designation
d	D	B	dyn. C_r	stat. C_{0r}	C_{ur}	n_G	$n_{\vartheta r}$	m	➤492|2.12 ➤492|2.13 X-life ➤484
			N	N	N	min^{-1}	min^{-1}	≈ kg	
80	170	58	420 000	495 000	76 000	8 500	4 600	6,1	**LSL192316**
85	180	60	445 000	520 000	77 000	8 000	4 350	7,3	**LSL192317**
90	190	64	590 000	610 000	109 000	7 500	4 050	8,6	**LSL192318-TB-XL**
95	200	67	610 000	660 000	117 000	7 000	3 750	10	**LSL192319-TB-XL**
100	215	73	750 000	790 000	139 000	6 600	3 450	12,8	**LSL192320-TB-XL**
110	240	80	880 000	930 000	158 000	5 800	3 000	17,3	**LSL192322-TB-XL**
120	260	86	1 060 000	1 140 000	189 000	5 300	2 650	22	**LSL192324-TB-XL**
130	280	93	1 190 000	1 280 000	209 000	4 900	2 450	27,2	**LSL192326-TB-XL**
140	300	102	1 340 000	1 460 000	234 000	4 600	2 300	34	**LSL192328-TB-XL**
150	320	108	1 410 000	1 760 000	204 000	4 250	2 020	40,7	**LSL192330-TB**
160	340	114	1 600 000	2 010 000	227 000	3 900	1 820	48,1	**LSL192332-TB**
170	360	120	1 740 000	2 210 000	249 000	3 750	1 760	57,5	**LSL192334-TB**
180	380	126	1 840 000	2 430 000	270 000	3 500	1 620	67,4	**LSL192336-TB**
190	400	132	2 100 000	2 750 000	300 000	3 400	1 540	78,1	**LSL192338-TB**
200	420	138	2 340 000	3 050 000	325 000	3 200	1 420	89,3	**LSL192340-TB**
220	460	145	2 500 000	3 200 000	335 000	2 850	1 270	108	**LSL192344-TB**
240	500	155	2 750 000	3 550 000	360 000	2 700	1 220	138,6	**LSL192348-TB**
260	540	165	3 350 000	4 350 000	435 000	2 380	1 010	168	**LSL192352-TB**
280	580	175	3 700 000	4 850 000	465 000	2 250	950	206,6	**LSL192356-TB**
300	620	185	4 150 000	5 500 000	530 000	2 130	890	253	**LSL192360-TB**

medias *https://www.schaeffler.de/std/1F9A*

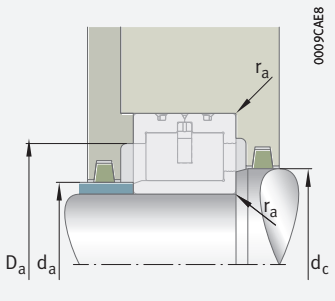

Mounting dimensions

Dimensions						Mounting dimensions			
d	r min.	s	F	d_1 ≈	D_1 ≈	d_a	d_c	D_a	r_a max.
80	2,1	3,5	94	104,5	134,8	94	104,5	134,5	2,1
85	3	4	100	111,3	143,9	100	111,5	143,5	3
90	3	4	105,3	117,2	152,5	105	117,5	152,5	3
95	3	4	114,7	126,6	161	114,5	127	161	3
100	3	4	119,3	132,7	172	119	133	172	3
110	3	5	135,5	150,7	193,1	135,5	151	193	3
120	3	5	147,4	164,2	213,1	147	164,5	213	3
130	4	5	157,9	176	227,9	157,5	176	227,5	4
140	4	7	168,5	187,5	243,2	168	187,5	243	4
150	4	7	182,5	203,3	263,9	182	203,5	263,5	4
160	4	7	196,4	219	284,8	196	219	284,5	4
170	4	7	230,6	226,6	295,4	230,5	227	295	4
180	4	7	221,6	245	313,3	221,5	245	313	4
190	5	7	224,4	250	325,5	224	250	325,5	5
200	5	7	238,5	265,7	345,9	238	266	345,5	5
220	5	7	266,7	297	385,9	266,5	297	385,5	5
240	5	10	280,6	312,5	406,1	280,5	312,5	406	5
260	6	10	315,6	351,6	457,2	315,5	352	457	6
280	6	12	333,1	371	485	333	371	485	6
300	7,5	12	350,9	390,9	508,5	350,5	391	508,5	7,5

Cylindrical roller bearings with spacers

Semi-locating bearings

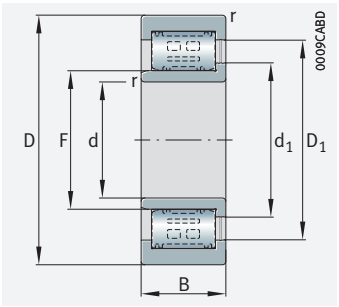

ZSL 1923

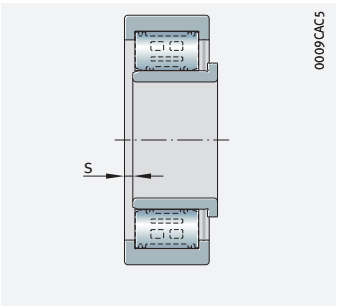

Axial displacement “s”

d = 25 – 120 mm

Main dimensions			Basic load ratings		Fatigue limit load	Limiting speed	Speed rating	Mass	Designation
d	D	B	dyn. C_r	dyn. C_{0r}	C_{ur}	n_G	$n_{\vartheta r}$	m	➤492|2.12 ➤492|2.13 X-life ➤484
			N	N	N	min^{-1}	min^{-1}	≈ kg	
25	62	24	60 000	54 000	7 100	17 100	10 000	0,36	**ZSL192305**
30	72	27	83 000	80 000	11 000	14 400	8 500	0,55	**ZSL192306**
35	80	31	105 000	101 000	15 400	12 300	7 500	0,72	**ZSL192307**
40	90	33	141 000	142 000	21 700	10 600	6 300	1	**ZSL192308**
45	100	36	151 000	157 000	24 100	9 900	6 300	1,34	**ZSL192309**
50	110	40	193 000	199 000	31 000	8 900	5 800	1,76	**ZSL192310**
55	120	43	224 000	231 000	36 500	8 000	5 400	2,22	**ZSL192311**
60	130	46	240 000	255 000	40 500	7 400	5 200	2,82	**ZSL192312**
65	140	48	295 000	320 000	51 000	6 700	4 600	3,44	**ZSL192313**
70	150	51	325 000	355 000	56 000	6 400	4 600	4,27	**ZSL192314**
75	160	55	385 000	435 000	67 000	5 900	4 200	5,2	**ZSL192315**
80	170	58	450 000	520 000	77 000	5 500	3 850	6,2	**ZSL192316**
85	180	60	480 000	570 000	82 000	5 100	3 600	7,23	**ZSL192317**
90	190	64	590 000	610 000	109 000	5 100	3 750	8,7	**ZSL192318-TB-XL**
95	200	67	620 000	660 000	117 000	4 750	3 450	10	**ZSL192319-TB-XL**
100	215	73	750 000	790 000	139 000	4 450	3 200	12,7	**ZSL192320-TB-XL**
110	240	80	890 000	900 000	150 000	3 850	2 700	16,5	**ZSL192322-TB-XL**
120	260	86	1 060 000	1 140 000	189 000	3 600	2 400	21,9	**ZSL192324-TB-XL**

medias *https://www.schaeffler.de/std/1F9A*

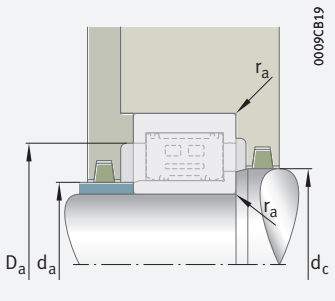

Mounting dimensions

Dimensions						Mounting dimensions			
d	r min.	s	F	d_1 ≈	D_1 ≈	d_a	d_c	D_a	r_a max.
25	1,1	2	31,7	36,7	47,5	31,5	37	47,5	1,1
30	1,1	2	38,3	43,5	56	38	43,5	56	1,1
35	1,5	2	44,7	50,7	65,8	44,5	51	65,5	1,5
40	1,5	2	51,1	57,5	75,2	51	57,5	75	1,5
45	1,5	3	56,1	62,5	80,3	56	62,5	80	1,5
50	2	3	60,7	68,3	89,7	60,5	68,5	89,5	2
55	2	3	67,1	75,5	99,3	67	75,5	99	2
60	2,1	3	73,6	82	105,8	73,5	82	105,5	2,1
65	2,1	3,5	80,7	90	116,5	80,5	90	116,5	2,1
70	2,1	3,5	84,1	93,5	121,6	84	93,5	121,5	2,1
75	2,1	3,5	91,2	101,6	131,9	91	102	131,5	2,1
80	2,1	3,5	98,2	109,5	142,1	98	109,5	142	2,1
85	3	4	107	118,5	150,9	107	118,5	150,5	3
90	3	4	105,3	117,5	152,5	105	117,5	152,5	3
95	3	4	114,7	126,6	161,9	114,5	127	161,5	3
100	3	4	119,3	132,7	172,8	119	133	172,5	3
110	3	5	134,3	151,1	199,9	134	151,5	199,5	3
120	3	5	147,4	164,2	213,1	147	164,5	213	3

3 Single row full complement cylindrical roller bearings

Single row full complement cylindrical roller bearings are suitable where:

- bearing arrangements are subjected to particularly high radial loads ➤*505|3.2*
- not only very high radial forces but also high axial loads from one direction must be supported by the bearing position (semi-locating bearing function) ➤*505|3.2*
- bearing arrangements operating under the conditions described above must have very high rigidity
- axial displacements of the shaft relative to the housing must be compensated without constraint in the bearing ➤*502|3.1*
- very high radial loads occur at lower speeds, i. e. the bearings do not need to achieve speeds as high as those of cylindrical roller bearings with cage ➤*509|3.6* and ➤*518|*
- particularly space-saving designs are required despite very high load
- the bearings should be separable (not self-retaining) for easier mounting ➤*502|3.1*

For an overview of other product-specific features, see the Matrix for bearing preselection ➤*414*.

1 *Cylindrical roller bearing with cage/full complement bearing, comparison of speed and load carrying capacity*

C_r = *basic dynamic load rating*
n_G = *limiting speed*

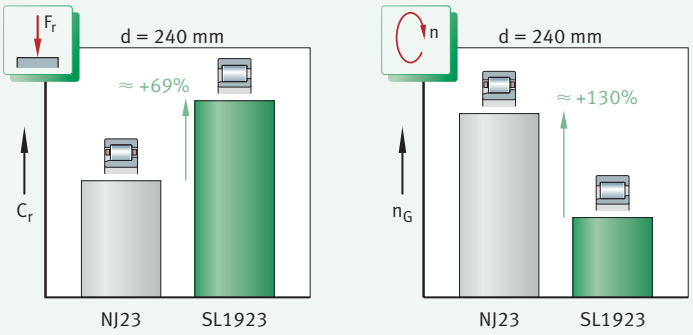

3.1 Bearing design

✎ *Design variants*

Single row full complement cylindrical roller bearings are available as:

- series SL1818, SL1829, SL1830, SL1822 (semi-locating bearings) ➤*503|2*
- series SL1923 (semi-locating bearings) ➤*503|3*
- X-life bearings ➤*504*

In addition to the bearings described here, Schaeffler supplies single row full complement cylindrical roller bearings in other types, series and dimensions. These products are described in some cases in special publications. If necessary, please contact Schaeffler. Larger catalogue bearings GL 1.

Bearings of basic design – standard range

✎ *Key features*

Single row full complement cylindrical roller bearings are part of the group of radial roller bearings. These bearings comprise solid outer rings, inner rings and full complement rolling element sets. Due to the absence of a cage, the bearing can accommodate the largest possible number of rolling elements. The rollers have profiled ends, i. e. they have a slight lateral curvature towards the ends. This modified line contact between the rolling elements and raceways prevents damaging edge stresses ➤*417*|⧉ *2*. The series SL1923 is self-retaining. Certain sizes are also available in an increased capacity design ➤*518*|▦. These bearings have the suffix E ➤*512*|▦ *6*.

Series SL1818, SL1829, SL1830, SL1822

✎ *Bearings with semi-locating bearing function*

In these bearings, the outer ring has one rigid rib and the inner ring has two rigid ribs ➤*503*|⧉ *2*. As a result, axial displacements of the shaft relative to the housing can be compensated within certain limits. The maximum axial displacement s is given in the product tables. Since the axial motion occurs without constraint in the bearing itself, this is practically free from friction with a rotating bearing. Cylindrical roller bearings of this design are used as semi-locating bearings, i. e. they can guide the shaft axially in one direction, while they act in the opposite direction as non-locating bearings ➤*505*|*3.2*.

The bearings are held together in handling and mounting by a transport and mounting retaining device on the outer ring ➤*503*|⧉ *2*. This retaining device remains in the bearing even after mounting and must not be subjected to axial load.

⧉ **2**
Single row full complement cylindrical roller bearing – semi-locating bearing

F_r = *radial load*
F_a = *axial load*
① *Transport and mounting retaining device*

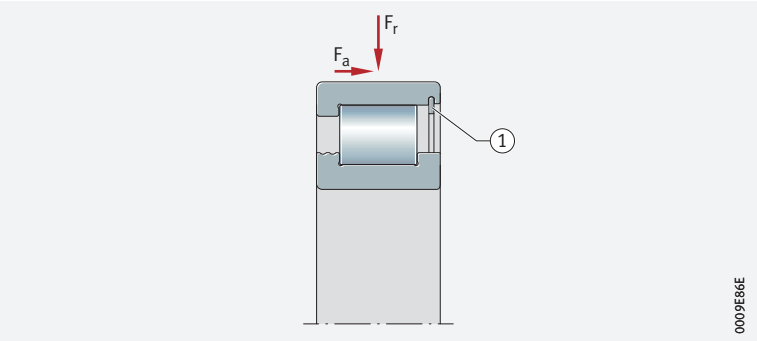

Series SL1923

✎ *Bearings with semi-locating bearing function*

Cylindrical roller bearings of this design have two rigid ribs on the outer ring and a self-retaining rolling element set, while the inner ring has only one rigid rib ➤*503*|⧉ *3*. As a result, the inner ring can be removed from the bearing. This gives easier mounting of the cylindrical roller bearings.

The bearings are used as semi-locating bearings, i. e. they can guide the shaft axially in one direction ➤*505*|*3.2* and permit axial displacements in the bearing between the shaft and housing in one direction. The maximum axial displacement s is given in the product tables.

⧉ **3**
Single row full complement cylindrical roller bearing

F_r = *radial load*
F_a = *axial load*

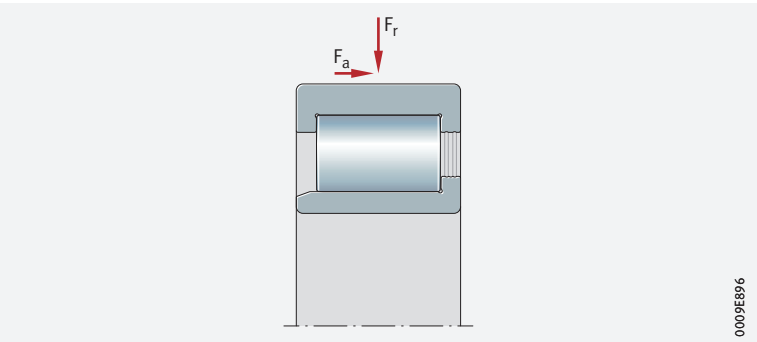

X-life premium quality

Many sizes are available as X-life bearings ➤*504*|*4*. These bearings exhibit considerably higher performance than comparable standard cylindrical roller bearings. This is achieved, for example, through the modified internal construction, the optimised contact geometry between the rollers and raceways, better surface quality and the optimised roller guidance and lubricant film formation.

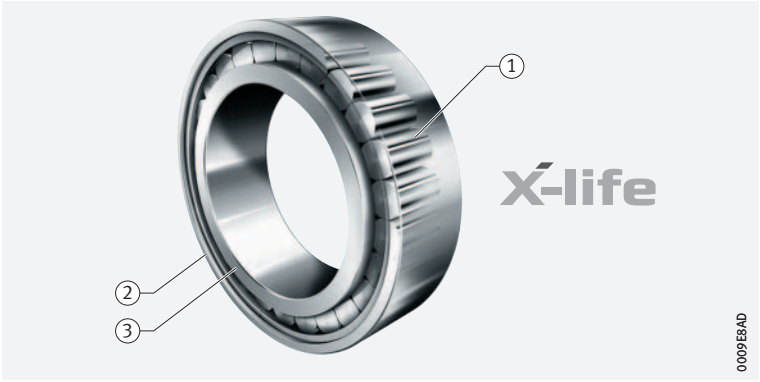

4
Single row full complement cylindrical roller bearing in X-life design

① *Cylindrical roller, honed*
② *Outer ring, honed*
③ *Inner ring, honed*

Advantages

Increased customer benefits due to X-life

These technical enhancements offer a range of advantages, such as:

- a more favourable load distribution in the bearing and thus a higher dynamic load carrying capacity of the bearings
- a higher fatigue limit load
- lower heat generation in the bearing
- lower lubricant consumption and therefore longer maintenance intervals if relubrication is carried out
- a measurably longer operating life of the bearings
- high operational security
- compact, environmentally-friendly bearing arrangements

Interchangeable with comparable standard bearings

Since the single row full complement X-life cylindrical roller bearings have the same dimensions as the corresponding standard bearings, the latter can be replaced without any problems by the higher-performance X-life bearings. The major advantages of X-life can therefore also be used for existing bearing arrangements with standard bearings.

Lower operating costs, higher machine availability

In conclusion, these advantages improve the overall cost-efficiency of the bearing position significantly and thus bring about a sustainable increase in the efficiency of the machine and equipment.

Suffix XL

X-life cylindrical roller bearings include the suffix XL in the designation ➤*512*|*3.12* and ➤*518*|.

Areas of application

Due to their special technical features, single row full complement X-life cylindrical roller bearings are highly suitable, for example, for bearing arrangements in:

- heavy industry (steel production)
- power transmission (gearbox engineering)
- processing machines and construction machinery
- wind turbines (gearbox applications)

X-life indicates a high product performance density and thus a particularly significant benefit to the customer. Further information on X-life ➤*10*.

3.2 Load carrying capacity

✎ *Designed for very high radial loads*

Due to the absence of a cage, the bearing can accommodate the largest possible number of rolling elements. As a result, full complement cylindrical roller bearings have very high radial load carrying capacity.

Higher axial load carrying capacity of bearings with toroidal crowned roller end face

✎ *Neither wear nor material fatigue occurs on the rib contact running and roller end faces*

In the case of cylindrical roller bearings with toroidal crowned rollers (TB design), the axial load carrying capacity has been significantly improved with the aid of new calculation and manufacturing methods. A special curvature of the roller end faces facilitates optimum contact conditions between the rollers and ribs ➤*505*|*5*. As a result, the axial contact pressures on the rib are significantly minimised and a lubricant film capable of supporting higher loads is formed. Under standard operating conditions, this completely eliminates wear and fatigue at the rib contact running and roller end faces. In addition, the axial frictional torque is reduced by up to 50%. The bearing temperature during operation is therefore significantly lower. Available bearings of toroidal crowned design ➤*505*|*1*.

5
Contact geometry of roller end face/rib face – modified roller end faces

① *Cylindrical roller with inner ring*
② *Detail (representation not to scale)*
③ *End of roller*
④ *Rib*

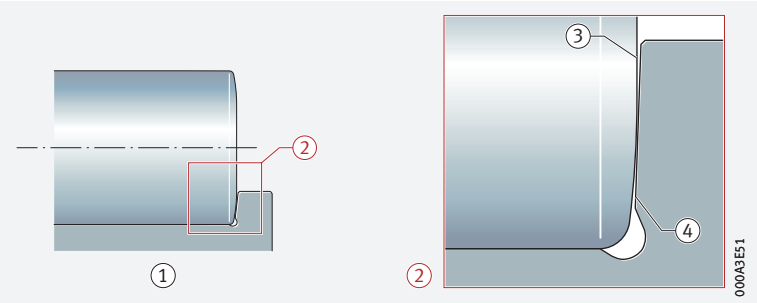

1
Single row full complement cylindrical roller bearings with toroidal crowned roller ends available by agreement

Series	Bore diameter d mm from
SL1818	460
SL1822	140
SL1829	300
SL1830	180
SL1923	90

Load ratio F_a/F_r

✎ *Ratio $F_a/F_r \leqq 0,4$ or 0,6*

The bearings can support axial loads on one side by means of the ribs on the inner and outer ring. In order to ensure problem-free running (tilting of the rollers is prevented), they must always be subjected to radial load at the same time as axial load. The ratio F_a/F_r must not exceed the value 0,4. For bearings with toroidal crowned roller ends (TB design), values up to 0,6 are permissible.

The load F_r describes the radial load for a single row bearing. For multi-row bearings, F_r must be divided by the number of rows.

Continuous axial loading without simultaneous radial loading is not permissible.

Permissible axial load

Influencing factors on the axial load carrying capacity

Axial loads are supported by the bearing ribs and the roller end faces ➤*506*| *6*. The axial load carrying capacity of the bearing is therefore essentially dependent on:

- the size of the sliding surfaces between the ribs and the end faces of the rolling elements
- the sliding velocity at the ribs
- the lubrication of the contact surfaces
- tilting of the bearing
- friction

6
Force flow under axial load – semi-locating bearing SL1923

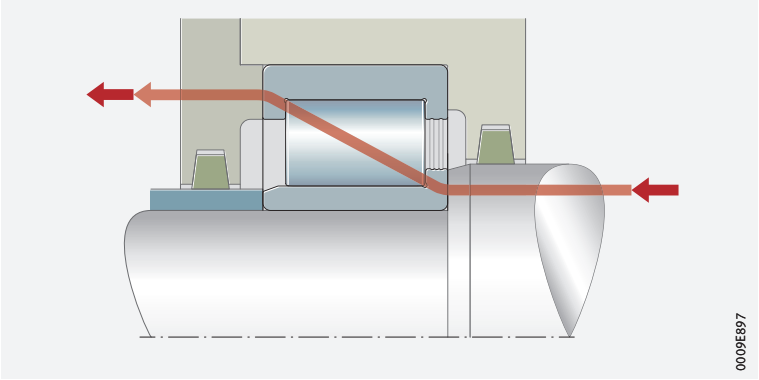

Calculation of permissible axial load – cylindrical rollers with conventional roller ends

Bearings with standard roller ends

The permissible axial load $F_{a\,per}$ can be calculated from the hydrodynamic load carrying capacity of the contact ➤*506*| *1*.

1
Permissible axial load – bearings of standard design

$$F_{a\,per} = k_S \cdot k_B \cdot d_M^{\,1,54} \cdot n^{-0,6} \leqq F_{a\,max}$$

Legend

$F_{a\,per}$	N	Permissible continuous axial load. In order to prevent unacceptably high temperatures in the bearing, $F_{a\,per}$ must not be exceeded
$F_{a\,max}$	N	Maximum continuous axial load in relation to rib fracture. In order to prevent unacceptably high pressures at the contact surfaces, $F_{a\,max}$ must not be exceeded
k_S	–	Factor as a function of lubrication method ➤*506*| *2*. The factor takes into consideration the lubrication method used for the bearing. The better the lubrication and, in particular, the heat dissipation, the higher the permissible axial load
k_B	–	Factor as a function of the bearing series ➤*507*| *3*
d_M	mm	Mean bearing diameter $d_M = (D + d)/2$ ➤*518*|
n	min^{-1}	Operating speed.

2
Factor k_S

Lubrication method	Factor k_S	
	from	up to
Minimal heat dissipation, drip feed oil lubrication, oil mist lubrication, low operating viscosity ($\nu < 0,5 \cdot \nu_1$)	7,5	10
Poor heat dissipation, oil sump lubrication, oil spray lubrication, low oil flow	10	15
Good heat dissipation, recirculating oil lubrication (pressurised oil lubrication)	12	18
Very good heat dissipation, recirculating oil lubrication with oil cooling, high operating viscosity ($\nu > 2 \cdot \nu_1$)	16	24

The precondition for these k_S values is an operating viscosity of the lubricant of at least the reference viscosity ν_1 in accordance with DIN ISO 281:2010.

Doped lubricating oils should be used, such as CLP (DIN 51517) and HLP (DIN 51524) of ISO VG grades 32 to 460, as well as ATF oils (DIN 51502) and transmission oils (DIN 51512) of SAE viscosity grades 75W to 140W.

3 *Bearing factor k_B*

Series	k_B
SL1818	4,5
SL1829	11
SL1830	17
SL1822	20
SL1923	30

Calculation of permissible axial load – cylindrical rollers with toroidal crowned roller ends

For bearings with toroidal roller ends, the permissible axial loads are 50% higher ➤507| 2.

2 *Permissible axial load – bearings of TB design*

$$F_{a\,per} = 1{,}5 \cdot k_S \cdot k_B \cdot d_M^{\,1{,}54} \cdot n^{-0{,}6} \leqq F_{a\,max}$$

Calculation of maximum permissible axial load

The maximum permissible axial load $F_{a\,max}$ ➤507| 3 is calculated from the rib strength and security against wear. This must not be exceeded, even if $F_{a\,per}$ gives higher values ➤507| 4.

3 *Maximum axial load – bearings of standard and TB design*

$$F_{a\,max} = 0{,}075 \cdot k_B \cdot d_M^{\,2{,}1}$$

4 *Permissible axial load*

$$F_{a\,per} \leqq F_{a\,max}$$

Axial load under shaft deflection

Permissible axial load under shaft deflection of up to 2′

Under considerable shaft deflection, the shaft shoulder presses against the inner ring rib. In combination with the active axial load, this can lead to high alternating loading of the inner ring ribs. Under a shaft deflection of up to 2′, the permissible axial load can be estimated ➤507| 5.

If more severe tilting is present, a separate strength analysis is required. In this case, please contact Schaeffler.

5 *Axial load under misalignment*

$$F_{as} = 20 \cdot d_M^{\,1{,}42}$$

Legend

F_{as}	N	Permissible axial load under misalignment.

3.3 Compensation of angular misalignments

Angular deviations are misalignments between the inner and outer ring

The possible misalignment between the inner ring and outer ring is influenced by the internal bearing construction, the operating clearance, the forces acting on the bearing etc. Due to these complex relationships, it is not possible to give generally valid absolute values here. However, misalignments (angular deviations) between the inner ring and outer ring will generally always have an effect on the running noise and the operating life of the bearings.

Permissible tilting

The permissible guide values at which, based on experience, there is no significant reduction in operating life are as follows:

- 4′ for series SL1818
- 3′ for series SL1923, SL1822, SL1829, SL1830

Scope of values

The stated values apply to:

- bearing arrangements with static misalignment (consistent position of the shaft and housing axis)
- bearings that are not required to perform an axial guidance function
- bearings subjected to small loads (with $C_{0r}/P \geqq 5$)

Checking by means of the calculation program BEARINX is recommended in all cases. If there is any uncertainty regarding possible misalignment, please consult Schaeffler.

3.4 Lubrication

Oil or grease lubrication is possible

The cylindrical roller bearings are not greased. They must be lubricated with oil or grease.

If there is any uncertainty regarding the suitability of the selected lubricant for the application, please consult Schaeffler or the lubricant manufacturer.

Observe oil change intervals

Aged oil and additives in the oil can impair the operating life of plastics at high temperatures. As a result, stipulated oil change intervals must be strictly observed.

3.5 Sealing

Provide seals in the adjacent construction

The bearings are not sealed, i.e. sealing of the bearing position must be carried out in the adjacent construction. This must reliably prevent:

- moisture and contaminants from entering the bearing
- the egress of lubricant from the bearing

3.6 Speeds

Speeds in the product tables

The product tables generally give two speeds for the bearings:

- the kinematic limiting speed n_G
- the thermal speed rating $n_{\vartheta r}$

Lower speed capacity than bearings with cage

Due to the kinematic conditions, however, bearings without cage do not achieve the high speeds that are possible when using bearings with cage.

Limiting speeds

The limiting speed n_G is the kinematically permissible speed of the bearing. Even under favourable mounting and operating conditions, this value should not be exceeded without prior consultation with Schaeffler ➤64.

Bearings with solid brass cages have a significantly higher limiting speed for oil lubrication.

Values for grease lubrication

For the grease lubrication of bearings without seals or shields, 85% of the value stated in the product tables is permissible in each case.

For the grease lubrication of bearings with solid brass cages, 65% of the value stated in the product tables is permissible in each case.

Reference speeds

$n_{\vartheta r}$ is used to calculate n_ϑ

The thermal speed rating $n_{\vartheta r}$ is not an application-oriented speed limit, but is a calculated ancillary value for determining the thermally safe operating speed n_ϑ ➤64.

3.7 Noise

The Schaeffler Noise Index (SGI) has been developed as a new feature for comparing the noise level of different bearing types and series. As a result, a noise evaluation of rolling bearings can now be carried out for the first time.

Schaeffler Noise Index

The SGI value is based on the maximum permissible noise level of a bearing in accordance with internal standards, which is calculated on the basis of ISO 15242. In order that different bearing types and series can be compared, the SGI value is plotted against the basic static load rating C_0.

This permits direct comparisons between bearings with the same load carrying capacity. The upper limit value is given in each of the diagrams. This means that the average noise level of the bearings is lower than illustrated in the diagram.

The Schaeffler Noise Index is an additional performance characteristic in the selection of bearings for noise-sensitive applications. The specific suitability of a bearing for an application in terms of installation space, load carrying capacity or speed limit for example, must be checked independently of this.

The Noise Index is currently available for the main series. Additional series will be updated and introduced in subsequent publications.

Further information:

- ***medias*** *https://medias.schaeffler.com*

7
Schaeffler Noise Index for single row full complement cylindrical roller bearings

SGI = *Schaeffler Noise Index*
C_0 = *basic static load rating*

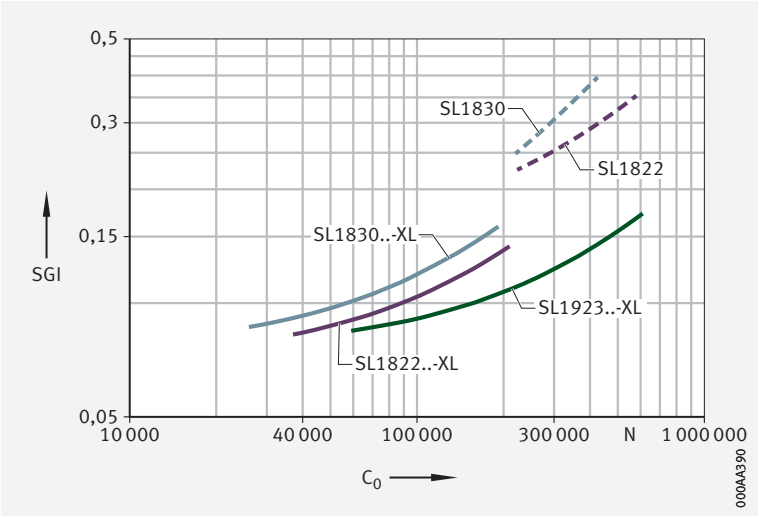

3.8 Temperature range

✎ *Limiting values*

The operating temperature of the bearings is limited by:
- the dimensional stability of the bearing rings and cylindrical rollers
- the cage
- the lubricant

Possible operating temperatures of single row cylindrical roller bearings ➤ *510* | 4.

4
Permissible temperature ranges

Operating temperature	Single row full complement cylindrical roller bearings
	–30 °C to +120 °C

In the event of anticipated temperatures which lie outside the stated values, please contact Schaeffler.

3.9 Cages

Full complement cylindrical roller bearings do not have a cage for guidance and separation of the rolling elements. The cylindrical rollers are guided by the ribs on the bearing rings.

3.10 Internal clearance

Radial internal clearance

✎ *The standard is CN*

Single row full complement cylindrical roller bearings are manufactured as standard with the radial internal clearance CN (normal) ➤*511*|▦ *5*. CN is not stated in the designation.

Certain sizes are also available by agreement with the larger internal clearance C3, C4 and C5 ➤*511*|▦ *5*.

The values for radial internal clearance correspond to DIN 620-4:2004 (ISO 5753-1:2009) ➤*511*|▦ *5*. They are valid for bearings which are free from load and measurement forces (without elastic deformation).

▦ **5**
Radial internal clearance of single row full complement cylindrical roller bearings

Nominal bore diameter d mm		Radial internal clearance							
		CN (Group N) µm		C3 (Group 3) µm		C4 (Group 4) µm		C5 (Group 5) µm	
over	incl.	min.	max.	min.	max.	min.	max.	min.	max.
–	24	20	45	35	60	50	75	65	90
24	30	20	45	35	60	50	75	70	95
30	40	25	50	45	70	60	85	80	105
40	50	30	60	50	80	70	100	95	125
50	65	40	70	60	90	80	110	110	140
65	80	40	75	65	100	90	125	130	165
80	100	50	85	75	110	105	140	155	190
100	120	50	90	85	125	125	165	180	220
120	140	60	105	100	145	145	190	200	245
140	160	70	120	115	165	165	215	225	275
160	180	75	125	120	170	170	220	250	300
180	200	90	145	140	195	195	250	275	330
200	225	105	165	160	220	220	280	305	365
225	250	110	175	170	235	235	300	330	395
250	280	125	195	190	260	260	330	370	440
280	315	130	205	200	275	275	350	410	485
315	355	145	225	225	305	305	385	455	535
355	400	190	280	280	370	370	460	510	600
400	450	210	310	310	410	410	510	565	665
450	500	220	330	330	440	440	550	625	735

3.11 Dimensions, tolerances

Dimension standards

The main dimensions of cylindrical roller bearings correspond to ISO 15:2017 (DIN 616:2000 and DIN 5412-1:2005).

Chamfer dimensions

The limiting dimensions for chamfer dimensions correspond to DIN 620-6:2004. Overview and limiting values ➤*137*|*7.11*. Nominal value of chamfer dimension ➤*518*|▦.

Tolerances

The dimensional and running tolerances of the cylindrical roller bearings correspond to the tolerance class Normal in accordance with ISO 492:2014. Tolerance values in accordance with ISO 492 ➤*124*|▦ *8*.

3.12 Suffixes

Suffixes describe the design and features of a bearing in more detail.

6 *Suffixes and corresponding descriptions*

Suffix	Description of suffix	
BR	Black oxide coated	Available by agreement
C3	Radial internal clearance C3 (larger than normal)	
C4	Radial internal clearance C4 (larger than C3)	
C5	Radial internal clearance C5 (larger than C4)	
E	Increased capacity design	Standard, dependent on bore code and bearing series; others available by agreement
TB	Bearing with increased axial load carrying capacity	
XL	X-life bearing	

3.13 Structure of bearing designation

With ***medias*** interchange, equivalent Schaeffler bearing designations can be determined for bearing designations from other rolling bearing manufacturers *https://www.schaeffler.de/std/1B69*.

Example of composition of bearing designation

The designation of bearings follows a set model. Example ➤*512*|*8*. The composition of designations is subject to DIN 623-1 ➤*102*|*10*.

8 *Single row full complement cylindrical roller bearing (semi-locating bearing): designation structure*

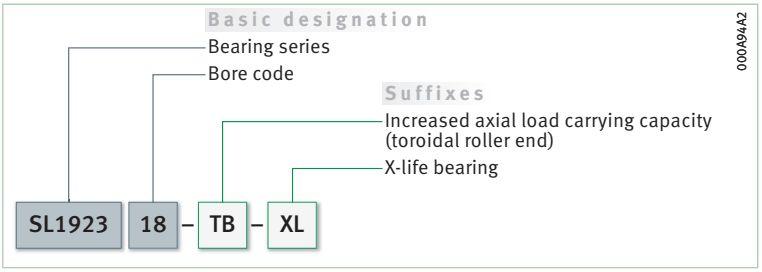

3.14 Dimensioning

Equivalent dynamic bearing load

$P = F_r$ under purely radial load of constant magnitude and direction

The basic rating life equation $L = (C_r/P)^p$ used in the dimensioning of bearings under dynamic load assumes a load of constant magnitude and direction. In radial bearings, this is a purely radial load F_r. If this condition is met, the bearing load F_r is used in the rating life equation for P ($P = F_r$).

Cylindrical roller bearings with semi-locating bearing function

P is a substitute force for combined load and various load cases

If the condition described above is not met, i. e. if, in addition to the radial force F_r, there is also an axial force F_a, a constant radial force must first be determined for the rating life calculation that (in relation to the rating life) represents an equivalent load. This force is known as the equivalent dynamic bearing load P.

$F_a/F_r \leqq e$ or $F_a/F_r > e$

The calculation of P is dependent on the load ratio F_a/F_r and the calculation factors e and Y ➤*512*|*6* and ➤*513*|*7*.

6 *Equivalent dynamic load*

$$\frac{F_a}{F_r} \leqq e \quad \Rightarrow \quad P = F_r$$

*f*7
Equivalent dynamic load

$$\frac{F_a}{F_r} > e \quad \Rightarrow \quad P = 0{,}92 \cdot F_r + Y \cdot F_a$$

Legend

P	N	Equivalent dynamic bearing load
F_r	N	Radial load
F_a	N	Axial load
e, Y	–	Factors ➤*513*|▦*7*.

▦7
Factors e and Y

Bearing series	Calculation factors	
	e	Y
SL1818	0,2	0,6
SL1923, SL1822, SL1829, SL1830	0,3	0,4

Equivalent static bearing load

✎ *$P_0 = F_{0r}$*

For cylindrical roller bearings subjected to static load ➤*513*\|*f*8.

*f*8
Equivalent static load

$$P_0 = F_{0r}$$

Legend

P_0	N	Equivalent static bearing load
F_{0r}	N	Largest radial load present (maximum load).

Static load safety factor

✎ *$S_0 = C_0/P_0$*

In addition to the basic rating life L (L_{10h}), it is also always necessary to check the static load safety factor S_0 ➤*513*\|*f*9.

*f*9
Static load safety factor

$$S_0 = \frac{C_0}{P_0}$$

Legend

S_0	–	Static load safety factor
C_0	N	Basic static load rating
P_0	N	Equivalent static bearing load.

3.15 Minimum load

✎ *In order to prevent damage due to slippage, a minimum radial load of $P > C_{0r}/60$ is necessary during continuous operation*

In order that no slippage occurs between the contact partners, the cylindrical roller bearings must be constantly subjected to a sufficiently high radial load. For continuous operation, experience shows that a minimum radial load of the order of $P > C_{0r}/60$ is thus necessary. In most cases, however, the radial load is already higher than the requisite minimum load due to the weight of the supported parts and the external forces.

If the minimum radial load is lower than indicated above, please consult Schaeffler.

3.16 Design of bearing arrangements

✎ *Support bearing rings over their entire circumference and width*

In order to allow full utilisation of the load carrying capacity of the bearings and achieve the requisite rating life, the bearing rings must be rigidly and uniformly supported by means of contact surfaces over their entire circumference and over the entire width of the raceway. Support can be provided by means of a cylindrical seating surface. The seating and contact surfaces should not be interrupted by grooves, holes or other recesses. The accuracy of mating parts must meet specific requirements ➤*514*\|▦*8* to ➤*515*\|▦*10*.

Radial location

For secure radial location, tight fits are necessary

In addition to supporting the rings adequately, the bearings must also be securely located in a radial direction, to prevent creep of the bearing rings on the mating parts under load. This is generally achieved by means of tight fits between the bearing rings and the mating parts. If the rings are not secured adequately or correctly, this can cause severe damage to the bearings and adjacent machine parts. Influencing factors, such as the conditions of rotation, magnitude of the load, internal clearance, temperature conditions, design of the mating parts and the mounting and dismounting options must be taken into consideration in the selection of fits.

If shock type loads occur, tight fits (transition fit or interference fit) are required to prevent the rings from coming loose at any point. Clearance, transition or interference fits ➤ *152* | ▦ *6* and ➤ *160* | ▦ *7*.

The following information provided in Technical principles must be taken into consideration in the design of bearing arrangements:

- criteria for selection of fits ➤ *146*
- conditions of rotation ➤ *147*
- tolerance classes for cylindrical shaft seats (radial bearings) ➤ *149* | ▦ *2*
- shaft fits ➤ *152* | ▦ *6*
- tolerance classes for bearing seats in housings (radial bearings) ➤ *150* | ▦ *4*
- housing fits ➤ *160* | ▦ *7*

Axial location

The bearings must also be securely located in an axial direction

As a tight fit alone is not normally sufficient to also locate the bearing rings securely on the shaft and in the housing bore in an axial direction, this must usually be achieved by means of an additional axial location or retention method. The axial location of the bearing rings must be matched to the type of bearing arrangement. Shaft and housing shoulders, housing covers, nuts, spacer rings, retaining rings, adapter and withdrawal sleeves etc., are fundamentally suitable; example ➤ *516* | ⧉ *9*.

Dimensional, geometrical and running accuracy of cylindrical seats

A minimum of IT6 should be provided for the shaft seat and a minimum of IT7 for the housing seat

The accuracy of the cylindrical bearing seat on the shaft and in the housing should correspond to the accuracy of the bearing used. For cylindrical roller bearings with the tolerance class Normal, the shaft seat should correspond to a minimum of standard tolerance grade IT6 and the housing seat to a minimum of IT7. Guide values for the geometrical and positional tolerances of the bearing seating surfaces ➤ *514* | ▦ *8*. Tolerances t_1 to t_3 in accordance with ➤ *170* | ⧉ *11*. Numerical values for IT grades ➤ *515* | ▦ *9*.

▦ **8**
Guide values for the geometrical and positional tolerances of bearing seating surfaces

Bearing tolerance class		Bearing seating surface	Standard tolerance grades to ISO 286-1 (IT grades)			
to ISO 492	to DIN 620		Diameter tolerance	Roundness tolerance t_1	Parallelism tolerance t_2	Total axial runout tolerance of abutment shoulder t_3
Normal	PN (P0)	Shaft	IT6 (IT5)	Circumferential load IT4/2	Circumferential load IT4/2	IT4
				Point load IT5/2	Point load IT5/2	
		Housing	IT7 (IT6)	Circumferential load IT5/2	Circumferential load IT5/2	IT5
				Point load IT6/2	Point load IT6/2	

9
Numerical values for ISO standard tolerances (IT grades) to ISO 286-1:2010

IT grade	Nominal dimension in mm								
	over	18	30	50	80	120	180	250	315	400
	incl.	30	50	80	120	180	250	315	400	500
	Values in µm									
IT4		6	7	8	10	12	14	16	18	20
IT5		9	11	13	15	18	20	23	25	27
IT6		13	16	19	22	25	29	32	36	40
IT7		21	25	30	35	40	46	52	57	63

Roughness of cylindrical bearing seating surfaces

Ra must not be too high

The roughness of the bearing seats must be matched to the tolerance class of the bearings. The mean roughness value Ra must not be too high, in order to maintain the interference loss within limits. The shafts must be ground, while the bores must be precision turned. Guide values as a function of the IT grade of bearing seating surfaces ➤*515*|▦ *10*.

10
Roughness values for cylindrical bearing seating surfaces – guide values

Nominal diameter of the bearing seat d (D) mm		Recommended mean roughness value for ground bearing seats Ramax µm			
		Diameter tolerance (IT grade)			
over	incl.	IT7	IT6	IT5	IT4
–	80	1,6	0,8	0,4	0,2
80	500	1,6	1,6	0,8	0,4

Mounting dimensions for the contact surfaces of bearing rings

The contact surfaces for the rings must be of sufficient height

The mounting dimensions of the shaft and housing shoulders, and spacer rings etc., must ensure that the contact surfaces for the bearing rings are of sufficient height. The transition from the bearing seat to the abutment shoulder must be designed with rounding to DIN 5418:1993 or an undercut to DIN 509:2006. Proven mounting dimensions for the radii and diameters of abutment shoulders are given in the product tables ➤*518*|▦ and ➤*516*|⧉ *9*. These dimensions are limiting dimensions (maximum or minimum dimensions); the actual values should not be higher or lower than specified.

Rib support in axially loaded bearings

Ribs under axial load must be supported over their entire height and entire circumference ➤*516*|⧉ *9*. The size and axial runout accuracy of the contact surfaces on the inner ring rib must be observed especially in the case of cylindrical roller bearings subjected to high loads, since these factors also influence the uniformity of the rib load and the running accuracy of the shaft. This means that the ribs may be subjected to damaging alternating stresses even in the case of very small misalignments. If the mounting dimensions indicated in the product tables are observed, the problems described can be reliably avoided ➤*518*|▦.

Support in semi-locating bearings

In semi-locating bearings, it is sufficient to support the bearing rings on one side, on the rib supporting the axial load ➤*516*|⧉ *9*.

9
Support of the inner ring rib – series SL1923 (semi-locating bearing)

d_c = *recommended height of shaft shoulder with axially loaded rib*
Arrow = *force flow*

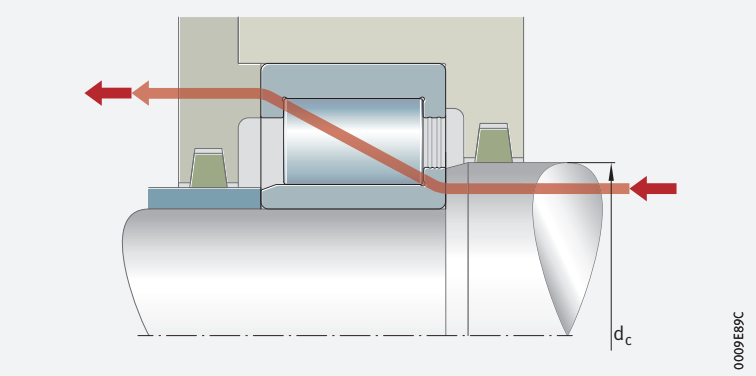

3.17 Mounting and dismounting

The mounting and dismounting options for cylindrical roller bearings, by thermal, hydraulic or mechanical methods, must be taken into consideration in the design of the bearing position.

Schaeffler Mounting Handbook

Rolling bearings must be handled with great care

Rolling bearings are well-proven precision machine elements for the design of economical and reliable bearing arrangements, which offer high operational security. In order that these products can function correctly and achieve the envisaged operating life without detrimental effect, they must be handled with care.

The Schaeffler Mounting Handbook MH 1 gives comprehensive information about the correct storage, mounting, dismounting and maintenance of rotary rolling bearings *https://www.schaeffler.de/std/1D53*. It also provides information which should be observed by the designer, in relation to the mounting, dismounting and maintenance of bearings, in the original design of the bearing position. This book is available from Schaeffler on request.

3.18 Legal notice regarding data freshness

The further development of products may also result in technical changes to catalogue products

Of central interest to Schaeffler is the further development and optimisation of its products and the satisfaction of its customers. In order that you, as the customer, can keep yourself optimally informed about the progress that is being made here and with regard to the current technical status of the products, we publish any product changes which differ from the printed version in our electronic product catalogue.

We therefore reserve the right to make changes to the data and illustrations in this catalogue. This catalogue reflects the status at the time of printing. More recent publications released by us (as printed or digital media) will automatically precede this catalogue if they involve the same subject. Therefore, please always use our electronic product catalogue to check whether more up-to-date information or modification notices exist for your desired product.

Link to electronic product catalogue

The following link will take you to the Schaeffler electronic product catalogue: *https://medias.schaeffler.com*.

3.19 Further information

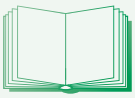

In addition to the data in this chapter, the following chapters in Technical principles must also be observed in the design of bearing arrangements:

- Determining the bearing size ➤*34*
- Rigidity ➤*54*
- Friction and increases in temperature ➤*56*
- Speeds ➤*64*
- Bearing data ➤*97*
- Lubrication ➤*70*
- Sealing ➤*185*
- Design of bearing arrangements ➤*141*
- Mounting and dismounting ➤*194*

Single row full complement cylindrical roller bearings

Semi-locating bearings

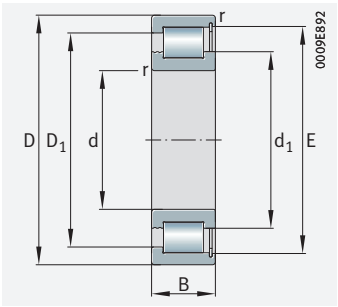

SL1829, SL1830, SL1822

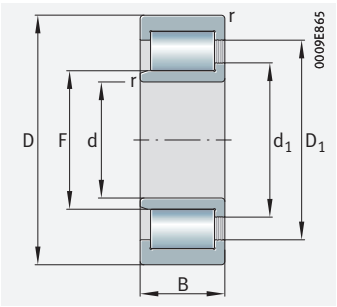

SL1923

d = 20 – 65 mm

Main dimensions			Basic load ratings		Fatigue limit load	Limiting speed	Speed rating	Mass	Designation
d	D	B	dyn. C_r	stat. C_{0r}	C_{ur}	n_G	$n_{\vartheta r}$	m	➤*512|3.12* ➤*512|3.13* X-life ➤*504*
			N	N	N	min^{-1}	min^{-1}	≈ kg	
20	42	16	30 500	26 000	4 550	11 400	7 500	0,11	**SL183004-XL**
	47	18	45 500	37 000	6 200	10 400	6 500	0,16	**SL182204-XL**
25	47	16	35 000	32 000	5 600	9 500	6 000	0,12	**SL183005-XL**
	52	18	51 000	44 500	7 500	9 000	5 500	0,18	**SL182205-XL**
	62	24	73 000	59 000	9 600	8 100	4 800	0,37	**SL192305-XL**
30	55	19	45 000	42 000	7 600	8 100	5 600	0,2	**SL183006-XL**
	62	20	70 000	64 000	10 400	7 400	4 550	0,3	**SL182206-XL**
	72	27	100 000	87 000	14 800	6 800	4 050	0,56	**SL192306-XL**
35	62	20	55 000	53 000	9 600	7 100	4 950	0,26	**SL183007-XL**
	72	23	88 000	78 000	12 900	6 400	4 250	0,44	**SL182207-XL**
	80	31	126 000	110 000	20 500	5 800	3 600	0,74	**SL192307-XL**
40	68	21	66 000	67 000	11 400	6 300	4 350	0,31	**SL183008-XL**
	80	23	97 000	91 000	15 200	5 600	3 650	0,55	**SL182208-XL**
	90	33	170 000	153 000	29 000	5 000	3 050	1,01	**SL192308-XL**
45	75	23	70 000	74 000	12 700	5 800	4 200	0,4	**SL183009-XL**
	85	23	101 000	98 000	16 300	5 300	3 450	0,59	**SL182209-XL**
	100	36	181 000	164 000	31 000	4 600	3 000	1,37	**SL192309-XL**
50	80	23	88 000	94 000	15 300	5 300	3 700	0,43	**SL183010-XL**
	90	23	109 000	111 000	18 500	4 750	3 000	0,64	**SL182210-XL**
	110	40	232 000	215 000	41 000	4 200	2 800	1,81	**SL192310-XL**
55	90	26	120 000	136 000	23 000	4 550	3 100	0,64	**SL183011-XL**
	100	25	140 000	148 000	25 500	4 350	2 700	0,87	**SL182211-XL**
	120	43	270 000	250 000	48 500	3 750	2 550	2,28	**SL192311-XL**
60	85	16	63 000	76 000	13 900	4 700	2 900	0,29	**SL182912-XL**
	95	26	123 000	143 000	24 100	4 350	3 000	0,69	**SL183012-XL**
	110	28	169 000	176 000	33 000	3 900	2 550	1,18	**SL182212-XL**
	130	46	285 000	275 000	54 000	3 500	2 480	2,88	**SL192312-XL**
65	90	16	67 000	84 000	15 400	4 250	2 550	0,31	**SL182913-XL**
	100	26	130 000	157 000	26 500	4 000	2 700	0,73	**SL183013-XL**
	120	31	198 000	210 000	39 500	3 650	2 480	1,57	**SL182213-XL**
	140	48	350 000	345 000	67 000	3 200	2 180	3,52	**SL192313-XL**

medias *https://www.schaeffler.de/std/1F9A*

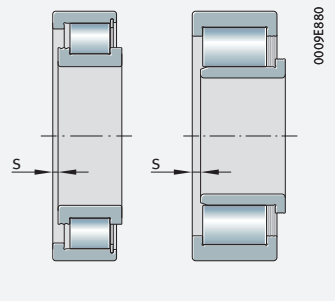

Axial displacement “s”

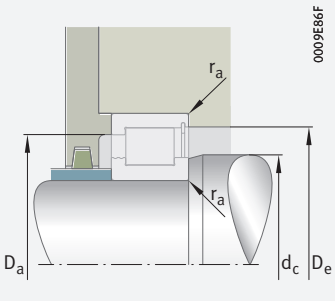

Mounting dimensions for SL1829, SL1830, SL1822

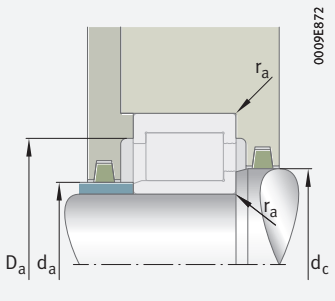

Mounting dimensions for SL1923

Dimensions							Mounting dimensions				
d	r min.	s	F	d_1 ≈	D_1 ≈	E	d_a	d_c	D_a	D_e	r_a max.
20	0,6	1,5	–	28,8	32,8	36,8	–	28,5	32,5	36,5	0,6
	1	1	–	30,3	36,9	41,5	–	30	36,5	41	1
25	0,6	1,5	–	34,6	38,5	42,5	–	34,5	38,5	42,5	0,6
	1	1	–	35,5	41,9	46,5	–	35,5	41,5	46,5	1
	1,1	2	31,7	36,7	47,5	–	31,5	36,5	47,5	–	1,1
30	1	2	–	40	45,4	49,6	–	40	45	49,5	1
	1	1	–	42	50,6	55,2	–	42	50,5	55	1
	1,1	2	38,3	43,5	56	–	38	43,5	56	–	1,1
35	1	2	–	44,9	51,3	55,5	–	44,5	51	55,5	1
	1,1	1	–	47	59,3	64	–	47	59	63,5	1,1
	1,5	2	44,7	50,7	65,8	–	44,5	50,5	65,5	–	1,5
40	1	2	–	50,5	57,1	61,7	–	50,5	57	61,5	1
	1,1	1	–	54	66,3	70,9	–	54	66	70,5	1,1
	1,5	2	51,1	57,5	75,2	–	51	57,5	75	–	1,5
45	1	2	–	55,3	62,2	66,9	–	55	62	66,5	1
	1,1	1	–	57,5	69,8	74,4	–	57,5	69,5	74	1,1
	1,5	3	56,1	62,5	80,3	–	56	62,5	80	–	1,5
50	1	2	–	59,1	67,7	72,3	–	59	67,5	72	1
	1,1	1	–	64,4	76,7	81,4	–	64	76,5	81	1,1
	2	3	60,7	68,3	89,7	–	60,5	68	89,5	–	2
55	1,1	2	–	68,5	78,8	83,5	–	68,5	78,5	83,5	1,1
	1,5	1	–	70	84,1	88,8	–	70	84	88,5	1,5
	2	3	67,1	75,5	99,3	–	67	75,5	99	–	2
60	1	1	–	69	74,4	78,6	–	69	74	78,5	1
	1,1	2	–	71,7	82,1	86,7	–	71,5	82	86,5	1,1
	1,5	1,5	–	76,8	93,9	99,2	–	76,5	93,5	99	1,5
	2,1	3	73,6	82	105,8	–	73,5	82	105,5	–	2,1
65	1	1	–	75,7	81	85,2	–	75,5	81	85	1
	1,1	2	–	78,1	88,4	93,1	–	78	88	93	1,1
	1,5	1,5	–	82,3	100,7	106,3	–	82	100,5	106	1,5
	2,1	3,5	80,7	90	116,5	–	80,5	90	116,5	–	2,1

Single row full complement cylindrical roller bearings

Semi-locating bearings

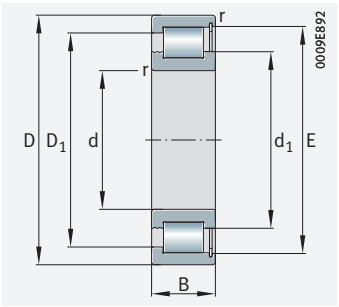

SL1829, SL1830, SL1822

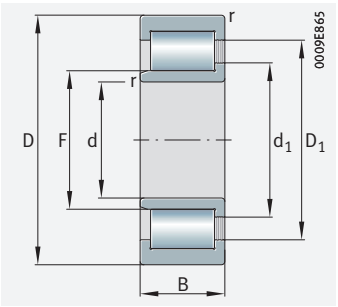

SL1923

d = 70 – 110 mm

Main dimensions			Basic load ratings		Fatigue limit load	Limiting speed	Speed rating	Mass	Designation
d	D	B	dyn. C_r	stat. C_{0r}	C_{ur}	n_G	$n_{\vartheta r}$	m	➤512|3.12 ➤512|3.13 X-life ➤504
			N	N	N	min^{-1}	min^{-1}	≈ kg	
70	100	19	88 000	111 000	19 200	3 950	2 550	0,49	**SL182914-XL**
	110	30	153 000	174 000	30 000	3 750	2 800	1,02	**SL183014-XL**
	125	31	181 000	223 000	34 500	3 450	2 340	1,66	**SL182214**
	150	51	385 000	385 000	73 000	3 050	2 170	4,33	**SL192314-XL**
75	105	19	91 000	119 000	20 400	3 700	2 370	0,52	**SL182915-XL**
	115	30	162 000	192 000	33 000	3 450	2 490	1,06	**SL183015-XL**
	130	31	187 000	236 000	36 500	3 250	2 210	1,75	**SL182215**
	160	55	460 000	465 000	88 000	2 800	2 000	5,3	**SL192315-XL**
80	110	19	94 000	126 000	21 700	3 500	2 220	0,55	**SL182916-XL**
	125	34	170 000	220 000	33 500	3 200	2 470	1,43	**SL183016**
	140	33	223 000	280 000	41 500	3 000	2 040	2,15	**SL182216**
	170	58	540 000	560 000	101 000	2 600	1 820	6,32	**SL192316-XL**
85	120	22	118 000	159 000	26 000	3 300	2 200	0,81	**SL182917-XL**
	130	34	175 000	231 000	35 000	3 050	2 360	1,51	**SL183017**
	150	36	255 000	320 000	47 500	2 850	2 000	2,74	**SL182217**
	180	60	570 000	610 000	108 000	2 410	1 710	7,34	**SL192317-XL**
90	125	22	122 000	169 000	27 000	3 100	2 050	0,84	**SL182918-XL**
	140	37	205 000	275 000	41 000	2 850	2 240	1,97	**SL183018**
	160	40	285 000	365 000	54 000	2 700	1 990	3,48	**SL182218**
	190	64	620 000	650 000	118 000	2 400	1 760	8,83	**SL192318-TB-XL**
95	130	22	132 000	177 000	28 000	2 950	1 940	0,86	**SL182919-XL**
	170	43	330 000	425 000	62 000	2 420	1 780	4,17	**SL182219**
	200	67	650 000	710 000	126 000	2 240	1 620	10,2	**SL192319-TB-XL**
100	140	24	152 000	203 000	32 500	2 750	1 870	1,14	**SL182920-XL**
	150	37	216 000	300 000	43 500	2 600	2 040	2,15	**SL183020**
	180	46	390 000	510 000	74 000	2 300	1 700	5,13	**SL182220**
	215	73	790 000	850 000	150 000	2 110	1 490	13	**SL192320-TB-XL-BR**
110	150	24	155 000	213 000	34 500	2 500	1 710	1,23	**SL182922-XL**
	170	45	280 000	385 000	55 000	2 350	2 010	3,5	**SL183022**
	200	53	450 000	580 000	83 000	2 130	1 720	7,24	**SL182222**
	240	80	950 000	970 000	163 000	1 820	1 270	17	**SL192322-TB-XL-BR**

medias *https://www.schaeffler.de/std/1F9A*

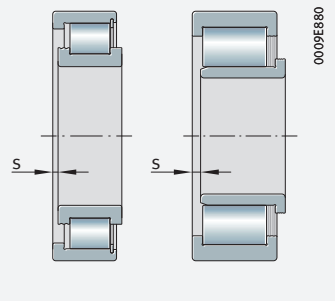

Axial displacement "s"

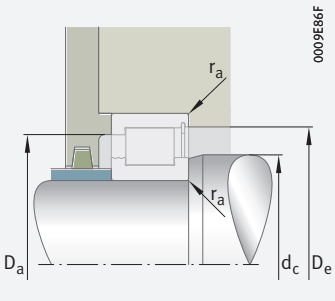

Mounting dimensions for SL1829, SL1830, SL1822

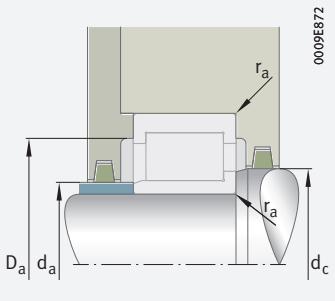

Mounting dimensions for SL1923

Dimensions							Mounting dimensions				
d	r min.	s	F	d_1 ≈	D_1 ≈	E	d_a	d_c	D_a	D_e	r_a max.
70	1	1	–	81,2	87,8	92,3	–	81	87,5	92	1
	1,1	3	–	81,5	95,6	100,3	–	81,5	95,5	100	1,1
	1,5	1,5	–	87	105,2	111,5	–	87	105	111	1,5
	2,1	3,5	84,1	93,5	121,6	–	84	93,5	121,5	–	2,1
75	1	1	–	86,3	92,8	97,4	–	86	92,5	97	1
	1,1	3	–	89	103,2	107,9	–	89	103	107,5	1,1
	1,5	1,5	–	91,8	110	116,2	–	91,5	110	116	1,5
	2,1	3,5	91,2	101,6	131,5	–	91	101,5	131,5	–	2,1
80	1	1	–	91,4	98	102,5	–	91	98	102,5	1
	1,1	4	–	95	111,7	117,4	–	95	111,5	117	1,1
	2	1,5	–	98,6	119,3	126,3	–	98,5	119	126	2
	2,1	3,5	98,2	109,5	142,1	–	98	109,5	142	–	2,1
85	1,1	1	–	96,4	105	109,6	–	96	105	109,5	1,1
	1,1	4	–	99,4	116,1	122	–	99	116	121,5	1,1
	2	1,5	–	104,4	126,3	133,8	–	104	126	133,5	2
	3	4	107	118,2	150,9	–	107	118	150,5	–	3
90	1,1	1	–	102	110,7	115,8	–	102	110,5	115,5	1,1
	1,5	4	–	106,1	124,5	130,1	–	106	124,5	130	1,5
	2	2,5	–	110,2	133,3	141,2	–	110	133	141	2
	3	4	105,3	117,5	152,5	–	105	117,5	152,5	–	3
95	1,1	1	–	106,7	117	122,3	–	106,5	117	122	1,1
	2,1	2,5	–	122	147,3	156	–	122	147	155,5	2,1
	3	4	114,7	126,6	161,9	–	114,5	126,5	161,5	–	3
100	1,1	1,5	–	113,4	125,7	131	–	113	125,5	130,5	1,1
	1,5	4	–	115,7	134	140,2	–	115,5	134	140	1,5
	2,1	2,5	–	127,5	154,3	163,4	–	127,5	154	163	2,1
	3	4	119,3	132,7	172,8	–	119	132,5	172,5	–	3
110	1,1	1,5	–	124	136,2	141,5	–	124	136	141,5	1,1
	2	5,5	–	127,3	149,3	156,7	–	127	149	156,5	2
	2,1	4	–	137	168	177,6	–	137	168	177,5	2,1
	3	5	134,3	151,1	199,9	–	134	151	199,5	–	3

Single row full complement cylindrical roller bearings

Semi-locating bearings

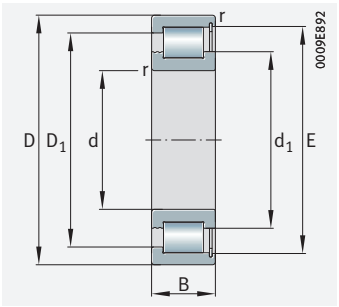

SL1829, SL1830, SL1822

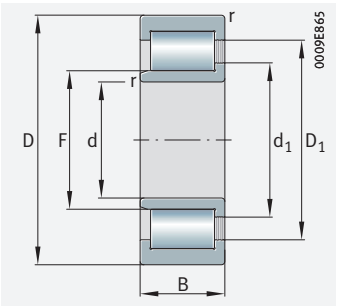

SL1923

d = 120 – 190 mm

Main dimensions			Basic load ratings		Fatigue limit load	Limiting speed	Speed rating	Mass	Designation
d	D	B	dyn. C_r	stat. C_{0r}	C_{ur}	n_G	$n_{\vartheta r}$	m	➤512|3.12 ➤512|3.13 X-life ➤504
			N	N	N	min^{-1}	min^{-1}	≈ kg	
120	165	27	199 000	285 000	46 500	2 290	1 590	1,73	**SL182924-XL**
	180	46	295 000	425 000	59 000	2 160	1 840	3,8	**SL183024**
	215	58	530 000	720 000	100 000	1 930	1 500	9,08	**SL182224**
	260	86	1 130 000	1 230 000	204 000	1 690	1 120	22,3	**SL192324-TB-XL-BR**
130	180	30	238 000	350 000	55 000	2 110	1 500	2,33	**SL182926-XL**
	200	52	425 000	600 000	84 000	1 990	1 660	5,65	**SL183026**
	230	64	620 000	850 000	115 000	1 790	1 360	11,25	**SL182226**
	280	93	1 260 000	1 380 000	225 000	1 570	1 040	27,95	**SL192326-TB-XL-BR**
140	190	30	260 000	375 000	61 000	1 950	1 370	2,42	**SL182928-XL**
	210	53	450 000	660 000	90 000	1 820	1 470	6,04	**SL183028**
	250	68	720 000	1 000 000	134 000	1 660	1 230	14,47	**SL182228**
	300	102	1 410 000	1 570 000	250 000	1 470	970	34,9	**SL192328-TB-XL-BR**
150	210	36	340 000	480 000	78 000	1 790	1 360	3,77	**SL182930-XL**
	225	56	475 000	700 000	93 000	1 740	1 430	7,33	**SL183030**
	270	73	820 000	1 160 000	154 000	1 560	1 130	18,43	**SL182230**
	320	108	1 490 000	1 900 000	235 000	1 350	840	42,1	**SL192330-TB-BR**
160	220	36	350 000	510 000	82 000	1 680	1 270	4	**SL182932-XL**
	240	60	540 000	800 000	105 000	1 600	1 280	8,8	**SL183032**
	290	80	1 020 000	1 470 000	187 000	1 370	920	23	**SL182232**
	340	114	1 690 000	2 170 000	244 000	1 250	760	49,7	**SL192332-TB-BR**
170	230	36	365 000	540 000	85 000	1 590	1 190	4,3	**SL182934-XL**
	260	67	700 000	1 050 000	135 000	1 480	1 120	12,2	**SL183034**
	310	86	1 140 000	1 660 000	208 000	1 300	870	28,65	**SL182234**
	360	120	1 830 000	2 380 000	270 000	1 200	730	59,2	**SL192334-TB-BR**
180	250	42	455 000	680 000	106 000	1 500	1 150	6,2	**SL182936-XL**
	280	74	810 000	1 240 000	157 000	1 370	1 020	16,1	**SL183036**
	320	86	1 180 000	1 760 000	218 000	1 230	800	29,8	**SL182236**
	380	126	1 940 000	2 600 000	285 000	1 120	670	69,1	**SL192336-TB-BR**
190	260	42	510 000	770 000	118 000	1 420	1 030	6,5	**SL182938-XL**
	290	75	830 000	1 300 000	163 000	1 320	970	17	**SL183038**
	340	92	1 300 000	1 900 000	232 000	1 170	770	35,65	**SL182238**
	400	132	2 220 000	2 950 000	320 000	1 090	630	80,3	**SL192338-TB-BR**

medias *https://www.schaeffler.de/std/1F9A*

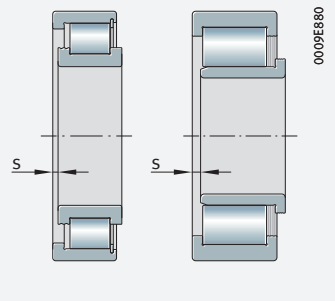

Axial displacement “s”

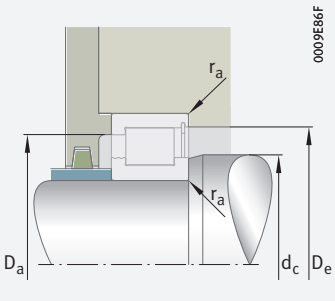

Mounting dimensions for SL1829, SL1830, SL1822

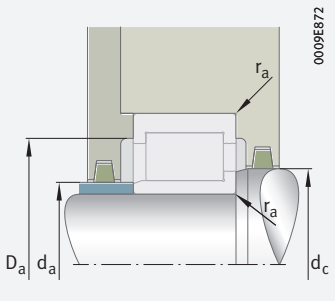

Mounting dimensions for SL1923

Dimensions							Mounting dimensions				
d	r min.	s	F	d_1 ≈	D_1 ≈	E	d_a	d_c	D_a	D_e	r_a max.
120	1,1	1,5	–	134,8	149	154,3	–	134,5	149	154	1,1
	2	5,5	–	138,8	160,7	168,2	–	138,5	160,5	168	2
	2,1	4	–	150,7	183	192,9	–	150,5	183	192,5	2,1
	3	5	147,4	164,2	213,1	–	147	164	213	–	3
130	1,5	2	–	146	161,1	167,2	–	146	161	167	1,5
	2	5,5	–	148,6	175,5	184,4	–	148,5	175,5	184	2
	3	5	–	162,3	197	207,8	–	162	197	207,5	3
	4	5	157,9	176	227,9	–	157,5	176	227,5	–	4
140	1,5	2	–	157	174	180	–	157	174	180	1,5
	2	5,5	–	162,2	189,5	198,4	–	162	189,5	198	2
	3	5	–	173,9	211,1	222,6	–	173,5	211	222,5	3
	4	7	168,4	187,8	243,4	–	168	187,5	243	–	4
150	2	2,5	–	169	189,6	196,8	–	169	189,5	196,5	2
	2,1	7	–	170	198	207,5	–	170	198	207	2,1
	3	6	–	185,5	225,2	237,4	–	185,5	225	237	3
	4	7	182,5	203,3	263,5	–	182	203	263,5	–	4
160	2	2,5	–	179,7	200,5	207,6	–	179,5	200,5	207,5	2
	2,1	7	–	184,8	215,8	225,5	–	184,5	215,5	225	2,1
	3	6	–	208,7	253,4	267,1	–	208,5	253	267	3
	4	7	196,4	219	284,4	–	196	219	284	–	4
170	2	2,5	–	190,6	211,3	218,5	–	190,5	211	218	2
	2,1	7	–	198,1	232,7	243,6	–	198	232,5	243,5	2,1
	4	7	–	220,3	267,4	281,9	–	220	267	281,5	4
	4	7	203,6	226,6	295	–	203,5	226,5	295	–	4
180	2	2,5	–	200,7	224	231,9	–	200,5	224	231,5	2
	2,1	7	–	212,2	249,4	261	–	212	249	261	2,1
	4	7	–	232,4	279,5	294	–	232	279,5	294	4
	4	7	221,6	245	312,9	–	221,5	245	312,5	–	4
190	2	2	–	211,5	238,5	244,2	–	211,5	238,5	244	2
	2,1	9	–	221,8	259	270,6	–	221,5	259	270,5	2,1
	4	9	–	243,5	295,5	311,5	–	243,5	295,5	311,5	4
	5	7	224,4	250	326,8	–	224	250	326,5	–	5

Single row full complement cylindrical roller bearings

Semi-locating bearings

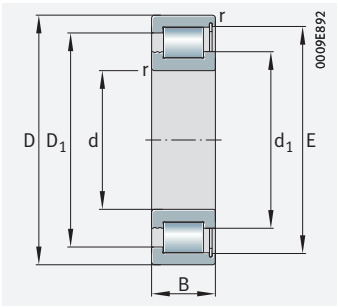

SL1818, SL1829, SL1830, SL1822

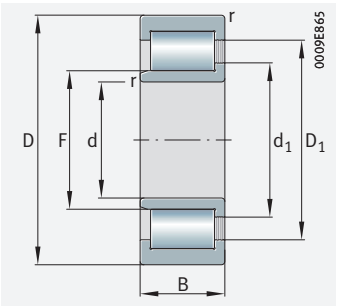

SL1923

d = 200 – 360 mm

Main dimensions			Basic load ratings		Fatigue limit load	Limiting speed	Speed rating	Mass	Designation
d	D	B	dyn. C_r	stat. C_{0r}	C_{ur}	n_G	$n_{\vartheta r}$	m	➤512|3.12 ➤512|3.13 X-life ➤504
			N	N	N	min^{-1}	min^{-1}	≈ kg	
200	250	24	178 000	320 000	34 000	1 420	1 040	2,57	**SL181840**
	280	48	610 000	940 000	142 000	1 320	950	9,1	**SL182940-XL**
	310	82	950 000	1 510 000	187 000	1 230	890	21,8	**SL183040**
	360	98	1 410 000	2 010 000	245 000	1 150	770	43,12	**SL182240**
	420	138	2 470 000	3 300 000	350 000	1 020	570	92,1	**SL192340-TB-BR**
220	270	24	187 000	350 000	36 500	1 290	940	2,8	**SL181844**
	300	48	650 000	1 030 000	152 000	1 210	840	9,9	**SL182944-XL**
	340	90	1 150 000	1 820 000	219 000	1 140	800	28,4	**SL183044**
	460	145	2 650 000	3 450 000	360 000	910	520	111,2	**SL192344-TB-BR**
240	300	28	265 000	490 000	55 000	1 160	870	4,29	**SL181848-E**
	320	48	600 000	1 120 000	132 000	1 120	750	10,6	**SL182948**
	360	92	1 210 000	1 990 000	234 000	1 040	720	30,9	**SL183048**
	500	155	2 900 000	3 800 000	390 000	860	500	142,3	**SL192348-TB-BR**
260	320	28	275 000	530 000	58 000	1 080	790	4,61	**SL181852-E**
	360	60	780 000	1 450 000	168 000	1 020	690	18,5	**SL182952**
	400	104	1 600 000	2 500 000	290 000	940	620	44,5	**SL183052-TB**
	540	165	3 550 000	4 700 000	465 000	760	410	173,2	**SL192352-TB-BR**
280	350	33	355 000	670 000	74 000	990	730	6,89	**SL181856-E**
	380	60	910 000	1 710 000	193 000	940	590	19,7	**SL182956-TB**
	420	106	1 650 000	2 650 000	300 000	900	590	48	**SL183056-TB**
300	380	38	455 000	840 000	91 000	920	680	9,79	**SL181860-E**
	420	72	1 170 000	2 200 000	246 000	870	540	31,2	**SL182960-TB**
	460	118	2 020 000	3 300 000	335 000	800	500	66,6	**SL183060-TB**
320	400	38	470 000	900 000	96 000	870	620	10,36	**SL181864-E**
	440	72	1 210 000	2 340 000	260 000	820	495	32,9	**SL182964-TB**
	480	121	2 080 000	3 450 000	350 000	770	480	71,7	**SL183064-TB**
340	420	38	485 000	960 000	100 000	810	570	10,93	**SL181868-E**
	460	72	1 250 000	2 470 000	270 000	770	460	34,7	**SL182968-TB**
	520	133	2 490 000	4 150 000	405 000	710	430	95,8	**SL183068-TB**
360	440	38	500 000	1 010 000	104 000	770	530	11,49	**SL181872-E**
	480	72	1 280 000	2 600 000	280 000	730	430	36,4	**SL182972-TB**
	540	134	2 550 000	4 350 000	420 000	680	405	101	**SL183072-TB**

medias *https://www.schaeffler.de/std/1F9A*

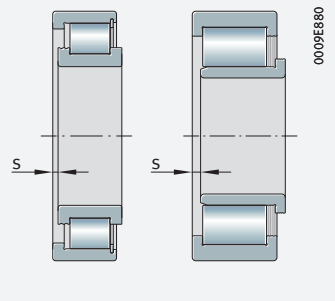

Axial displacement "s"

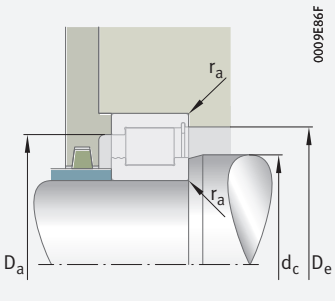

Mounting dimensions for SL1818, SL1829, SL1830, SL1822

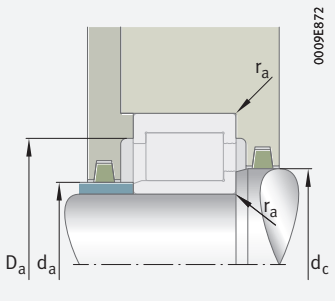

Mounting dimensions for SL1923

Dimensions							Mounting dimensions				
d	r min.	s	F	d_1 ≈	D_1 ≈	E	d_a	d_c	D_a	D_e	r_a max.
200	1,5	2	–	216,6	231,6	237,6	–	216,5	231,5	237,5	1,5
	2,1	3	–	225,5	252,4	261,6	–	225,5	252	261,5	2,1
	2,1	9	–	236,6	276,2	288,6	–	236,5	276	288,5	2,1
	4	9	–	246,6	302,4	319,4	–	246,5	302	319	4
	5	7	238,5	265,7	347,2	–	238	265,5	347	–	5
220	1,5	2	–	237,3	252,3	258,5	–	237	252	258,5	1,5
	2,1	3	–	246,3	273,2	282,5	–	246	273	282	2,1
	3	9	–	254,6	299,2	312	–	254,5	299	312	3
	5	7	266,7	297	388,3	–	266,5	297	388	–	5
240	2	2	–	260,5	281	287,5	–	260,5	281	287,5	2
	2,1	3	–	267,5	294,4	303,7	–	267,5	294	303,5	2,1
	3	11	–	277,5	322,1	336	–	277,5	322	336	3
	5	10	280,6	312,5	408,5	–	280,5	312,5	408,5	–	5
260	2	2	–	281	301,5	308	–	281	301,5	308	2
	2,1	5	–	291,5	323,4	333,7	–	291,5	323	333,5	2,1
	4	11	–	304	358,4	376	–	304	358	375,5	4
	6	10	315,6	351,6	459,6	–	315,5	351,5	459,5	–	6
280	2	2,5	–	304	327	335	–	304	327	335	2
	2,1	3,5	–	314	348,5	359,5	–	314	348,5	359,5	2,1
	4	11	–	319,5	372,9	390,3	–	319,5	372,5	390	4
300	2,1	3	–	323,5	350,5	360	–	323,5	350,5	360	2,1
	3	5	–	338	376,9	389,5	–	338	376,5	389	3
	4	14	–	353,6	415,6	434,9	–	353,5	415,5	434,5	4
320	2,1	3	–	344,5	371,5	381	–	344,5	371,5	381	2,1
	3	5	–	358,5	397,4	409,9	–	358,5	397	409,5	3
	4	14	–	369,5	430,1	449,5	–	369,5	430	449,5	4
340	2,1	3	–	365,5	392,5	402,2	–	365,5	392,5	402	2,1
	3	5	–	379	418,7	430,2	–	379	418,5	430	3
	5	16	–	396,1	463,9	485,7	–	396	463,5	485,5	5
360	2,1	3	–	387	413,5	423,5	–	387	413,5	423,5	2,1
	3	5	–	399,5	438,6	450,6	–	399,5	438,5	450,5	3
	5	16	–	414	481,6	503,5	–	414	481,5	503	5

Single row full complement cylindrical roller bearings

Semi-locating bearings

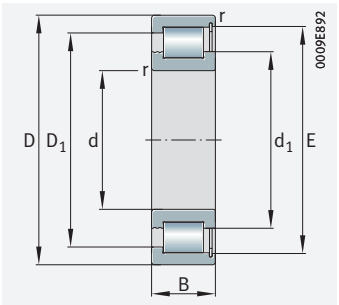

SL1818, SL1829, SL1830

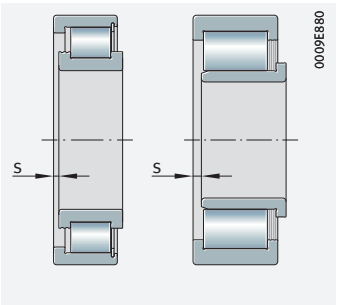

Axial displacement “s”

d = 380 – 500 mm

Main dimensions			Basic load ratings		Fatigue limit load	Limiting speed	Speed rating	Mass	Designation
d	D	B	dyn. C_r	stat. C_{0r}	C_{ur}	n_G	$n_{\vartheta r}$	m	➤*512|3.12* ➤*512|3.13*
			N	N	N	min^{-1}	min^{-1}	≈ kg	
380	480	46	650 000	1 290 000	133 000	710	490	18,87	**SL181876-E**
	520	82	1 660 000	3 300 000	345 000	680	380	52,1	**SL182976-TB**
	560	135	2 600 000	4 450 000	430 000	660	390	106	**SL183076-TB**
400	500	46	660 000	1 340 000	137 000	680	470	19,81	**SL181880-E**
	540	82	1 710 000	3 500 000	360 000	650	350	54,3	**SL182980-TB**
	600	148	3 050 000	5 400 000	520 000	610	345	140	**SL183080-TB**
420	520	46	680 000	1 420 000	143 000	650	430	20,6	**SL181884-E**
	560	82	1 730 000	3 600 000	370 000	630	340	56,9	**SL182984-TB**
440	540	46	700 000	1 470 000	147 000	620	415	21,54	**SL181888-E**
	600	95	2 090 000	4 100 000	420 000	590	325	78,1	**SL182988-TB**
460	580	56	940 000	1 890 000	189 000	580	385	33,21	**SL181892-E-TB**
	620	95	2 130 000	4 250 000	430 000	570	310	81,1	**SL182992-TB**
480	600	56	960 000	1 970 000	195 000	560	365	34,53	**SL181896-E-TB**
	650	100	2 390 000	4 800 000	480 000	530	280	94,7	**SL182996-TB**
500	620	56	980 000	2 050 000	200 000	540	345	35,73	**SL1818/500-E-TB**
	670	100	2 430 000	4 950 000	490 000	520	270	98,3	**SL1829/500-TB**

medias *https://www.schaeffler.de/std/1F9A*

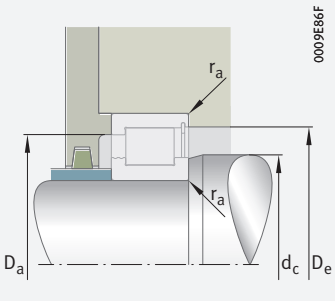

Mounting dimensions
for SL1818, SL1829, SL1830

Dimensions						Mounting dimensions				
d	r min.	s	d_1 ≈	D_1 ≈	E	d_a	d_c	D_a	D_e	r_a max.
380	2,1	4	415,5	448	459	–	415,5	448	459	2,1
	4	5	426	472,1	486,7	–	426	472	486,5	4
	5	16	431,7	499,5	521,3	–	431,5	499,5	521	5
400	2,1	4	432	464,5	475,5	–	432	464,5	475,5	2,1
	4	5	450	496,1	510,9	–	450	496	510,5	4
	5	18	462,5	535,1	558,5	–	462,5	535	558,5	5
420	2,1	4	457	489,5	500	–	457	489,5	500	2,1
	4	5	462	509	523	–	462	509	522,5	4
440	2,1	4	473,5	506	517	–	473,5	506	517	2,1
	4	7	490	544,6	562	–	490	544,5	562	4
460	3	5	501,5	540	554	–	501,5	540	554	3
	4	7	504	559,6	576,3	–	504	559,5	576	4
480	3	5	522	560	574,5	–	522	560	574,5	3
	5	7	538	596,6	614,8	–	538	596,5	614,5	5
500	3	5	542	580,5	594,5	–	542	580,5	594,5	3
	5	7	553	612,7	630	–	553	612,5	630	5

4 Double row full complement cylindrical roller bearings

Double row full complement cylindrical roller bearings are suitable where:

- bearing arrangements are subjected to particularly high radial loads ➤*532*|*4.2*
- not only particularly high radial forces but also high axial loads from one or both directions must be supported by the bearing position (semi-locating or locating bearing function) ➤*532*|*4.2*
- bearing arrangements must have very high rigidity
- Axial displacements of the shaft relative to the housing must be aompensated without constraint in the bearing (in the case of bearings with a non-locating or semi-locating bearing function) ➤*528*|*4.1*
- very high radial loads occur at lower speeds, i. e. the bearings do not need to achieve speeds as high as those of cylindrical roller bearings with cage ➤*535*|*4.6* and ➤*548*|▦
- space-saving designs are required despite very high load
- the bearings should be separable for easier mounting (bearings with non-locating bearing function) ➤*528*|*4.1* and ➤*546*|*4.17*

For an overview of other product-specific features, see the Matrix for bearing preselection ➤*414*.

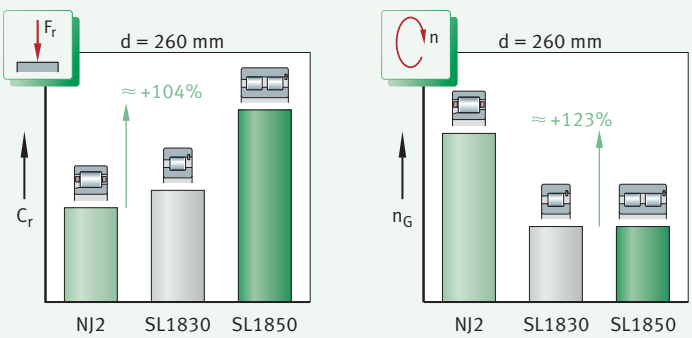

1 *Cylindrical roller bearing with cage/single row full complement bearing, double row full complement bearing, comparison of speed and load carrying capacity*

C_r = *basic dynamic load rating*
n_G = *limiting speed*

4.1 Bearing design

✎ *Design variants*

The standard range of double row full complement cylindrical roller bearings comprises:

- series SL0248 and SL0249 (non-locating bearings) ➤*529*|🗀 *2*
- series SL1850 (semi-locating bearings) ➤*530*|🗀 *3*
- series SL0148 and SL0149 (locating bearings) ➤*530*|🗀 *4*
- series SL0450 and SL04 (cylindrical roller bearings with annular slots – rope sheave bearings) ➤*531*|🗀 *5*
- X-life bearings ➤*531*

In addition to the bearings described here, Schaeffler supplies double row full complement cylindrical roller bearings in other types, series and dimensions. These products are described in some cases in special publications. If necessary, please contact Schaeffler. Larger catalogue bearings GL 1.

Bearings of basic design – standard range

Key features

Double row full complement cylindrical roller bearings are part of the group of radial roller bearings. These bearings comprise solid outer rings, inner rings and full complement rolling element sets. Due to the absence of a cage, the bearing can accommodate the largest possible number of rolling elements. The rollers have profiled ends, i.e. they have a slight lateral curvature towards the ends. This modified line contact between the rolling elements and raceways prevents damaging edge stresses ➤*417*|2. Bearings in the standard range differ essentially in the arrangement of the ribs on the inner ring and outer ring. Depending on the design, they are used as non-locating bearings, semi-locating bearings or locating bearings.

Series SL0248, SL0249

Bearings with non-locating bearing function

In bearings of these series, the inner ring has three rigid ribs, while the outer ring is without ribs ➤*529*|2.
As a result, axial displacements of the shaft relative to the housing can be compensated within certain limits. During rotational motion, length compensation occurs without constraint in the bearing between the rollers and the raceway without ribs and is therefore practically free from friction. The maximum axial displacement s is given in the product tables. The bearings are used as non-locating bearings, i.e. they cannot guide the shaft axially in either direction ➤*532*|*4.2*.

According to DIN 5412-9:1982, which has now been withdrawn, the bearings have the following designation:

- SL0248: NNCL48..V
- SL0249: NNCL49..V

The bearings are held together in handling and mounting by a transport and mounting retaining device on the outer ring ➤*529*|2.
This retaining device remains in the bearing even after mounting and must not be subjected to axial load.

2
Double row full complement cylindrical roller bearing – non-locating bearing

F_r = *radial load*

① *Transport and mounting retaining device*

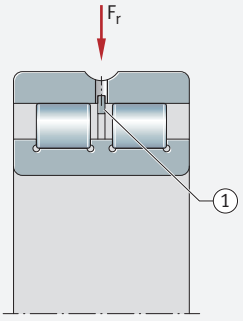

0009EC25

Series SL1850

Bearings with semi-locating bearing function

Bearings of series SL1850 (dimension series 50) have three rigid ribs on the inner ring and one rigid rib on the outer ring ➤*530*|3. In these cylindrical roller bearings, axial displacements of the shaft relative to the housing are possible in one direction only. The maximum axial displacement s is given in the product tables ➤*548*|▦. The bearings are used as semi-locating bearings, i.e. they can guide the shaft axially in one direction ➤*532*|*4.2*.

The bearings are held together in handling and mounting by a transport and mounting retaining device on the outer ring ➤*530*|3.

This retaining device remains in the bearing even after mounting and must not be subjected to axial load.

3
Double row full complement cylindrical roller bearing – semi-locating bearing

F_r = *radial load*
F_a = *axial load*
① *Transport and mounting retaining device*

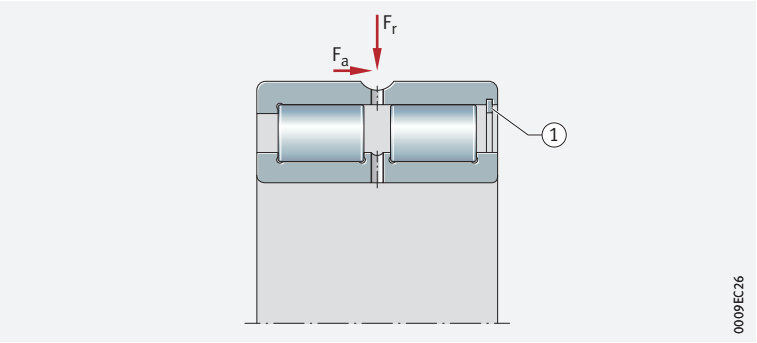

Series SL0148, SL0149

Bearings with locating bearing function

In these bearings, the inner ring has three rigid ribs and the outer ring has two rigid ribs ➤*530*|*4*. Axial displacements between the shaft and housing are not possible. The bearings are used as locating bearings, i.e. they can guide the shaft axially in both directions ➤*532*|*4.2*.

According to DIN 5412-9:1982, which has now been withdrawn, the bearings have the following designation:

- SL0148: NNC48..V
- SL0149: NNC49..V

The split outer ring is held together by a transport and mounting retaining device ➤*530*|*4*. This retaining device remains in the bearing even after mounting and must not be subjected to axial load.

4
Double row full complement cylindrical roller bearing – locating bearing

F_r = *radial load*
F_a = *axial load*
① *Retaining ring*

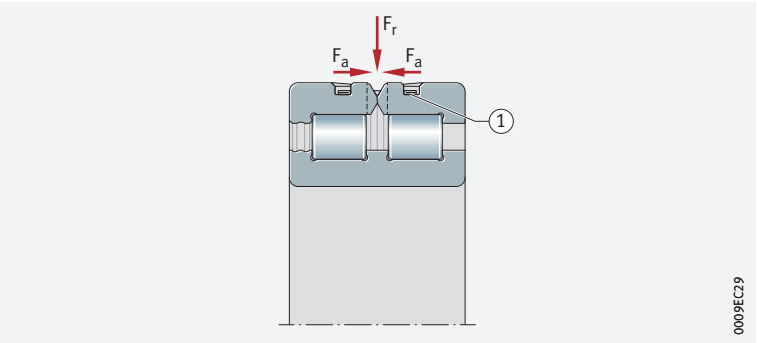

Series SL0450..-PP and SL04..-PP – cylindrical roller bearings with annular slots

Bearings with locating bearing function, particularly suitable for the support of rope sheaves

These bearings comprise solid outer rings with central rib, inner rings with three ribs, rib-guided rolling element sets and sealing rings ➤*531*|*5*. The outer rings have annular slots for retaining rings. The inner rings are axially split, 1 mm wider than the outer rings and held together by a sheet metal ring. They are used as locating bearings (but can support only slight axial loads) and are used in preference for the support of rope sheaves.

Light series and dimension series 50

Cylindrical roller bearings with annular slots are available as a light series SL04..-PP and in the dimension series 50 as SL0450..-PP. The latter has a higher load carrying capacity than the light series ➤*556*|.

Extensive information on rope sheave bearing arrangements is given in the Technical Product Information TPI 237. This publication can be requested from Schaeffler.

5
Double row full complement cylindrical roller bearing with annular slots – locating bearing

F_r = *radial load*
F_a = *axial load*

① *Slots in outer ring*
② *Sealing rings*
③ *Sheet metal ring*
④ *Retaining rings*
⑤ *Rope sheave*

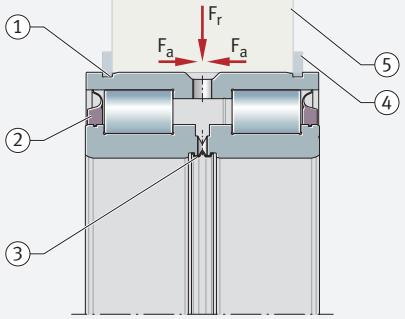

X-life premium quality

Double row full complement cylindrical roller bearings of series SL1850 are available in many sizes as X-life bearings ➤*548*|▦. These bearings exhibit considerably higher performance than comparable standard cylindrical roller bearings. This is achieved, for example, through the modified internal construction, the optimised contact geometry between the rollers and raceways, the better surface quality and the optimised roller guidance and lubricant film formation.

Advantages

✎ Increased customer benefits due to X-life

These technical enhancements offer a range of advantages, such as:

- a more favourable load distribution in the bearing and thus a higher dynamic load carrying capacity of the bearings
- a higher fatigue limit load
- lower heat generation in the bearing
- lower lubricant consumption and therefore longer maintenance intervals if relubrication is carried out
- a measurably longer operating life of the bearings
- high operational security
- compact, environmentally-friendly bearing arrangements

✎ Interchangeable with comparable standard bearings

Since X-life cylindrical roller bearings have the same dimensions as the corresponding standard bearings, the latter can be replaced without any problems by the higher-performance X-life bearings. The major advantages of X-life can therefore also be used for existing bearing arrangements with standard bearings.

✎ Lower operating costs, higher machine availability

In conclusion, these advantages improve the overall cost-efficiency of the bearing position significantly and thus bring about a sustainable increase in the efficiency of the machine and equipment.

✎ Suffix XL

X-life cylindrical roller bearings include the suffix XL in the designation ➤*539*|*4.12* and ➤*548*|▦.

Areas of application

Due to their special technical features, double row full complement X-life cylindrical roller bearings are highly suitable, for example, for bearing arrangements in:

- heavy industry (steel production)
- power transmission (gearbox engineering)
- processing machines and construction machinery
- wind turbines (gearbox applications)

X-life indicates a high product performance density and thus a particularly significant benefit to the customer. Further information on X-life ➤*10*.

4.2 Load carrying capacity

Designed for very high radial loads

Depending on the type, double row full complement cylindrical roller bearings can support not only very high radial forces but also high axial loads on one or both sides:

- The series SL0248 and SL0249 must only be subjected to radial load
- The series SL1850 can support radial loads as well as axial loads on one side
- The series SL0148 and SL0149 can support radial loads as well as axial loads on both sides
- The series SL0450..-PP and SL04..50-PP can support radial loads and are suitable for the support of slight axial loads from both directions

Higher axial load carrying capacity of bearings with toroidal crowned roller end face

Neither wear nor material fatigue occurs on the rib contact running and roller end faces

In the case of cylindrical roller bearings with toroidal crowned rollers (TB design), the axial load carrying capacity has been significantly improved with the aid of new calculation and manufacturing methods. A special curvature of the roller end faces facilitates optimum contact conditions between the rollers and ribs ➤532| 6. As a result, the axial contact pressures on the rib are significantly minimised and a lubricant film capable of supporting higher loads is formed. Under standard operating conditions, this completely eliminates wear and fatigue at the rib contact running and roller end faces. In addition, the axial frictional torque is reduced by up to 50%. The bearing temperature during operation is therefore significantly lower. Bearings of toroidal crowned design ➤548|.

By agreement, bearings of series SL1850 are available starting from a bore diameter d = 180 mm in the TB design.

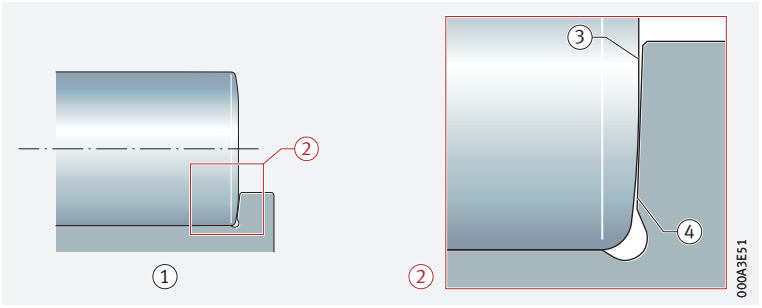

6 *Contact geometry of roller end face/rib face – modified roller end faces*

① *Cylindrical roller with inner ring*
② *Detail (representation not to scale)*
③ *End of roller*
④ *Rib*

Load ratio F_a/F_r

Ratio $F_a/F_r \leqq 0,4$ or 0,6

The bearings can support axial loads on one side by means of the ribs on the inner and outer ring. In order to ensure problem-free running (tilting of the rollers is prevented), they must always be subjected to radial load at the same time as axial load. The ratio F_a/F_r must not exceed the value 0,4. For bearings with toroidal crowned roller ends (TB design), values up to 0,6 are permissible.

The load F_r describes the radial load for a single row bearing.
For multi-row bearings, F_r must be divided by the number of rows.

Continuous axial loading without simultaneous radial loading is not permissible.

Permissible axial load

Influencing factors on the axial load carrying capacity

Axial loads are supported by the bearing ribs and the roller end faces ➤*533*| 7. The axial load carrying capacity of the bearing is therefore essentially dependent on:

- the size of the sliding surfaces between the ribs and the end faces of the rolling elements
- the sliding velocity at the ribs
- the lubrication of the contact surfaces
- tilting of the bearing
- friction

7
Force flow under axial load – semi-locating bearing SL1850

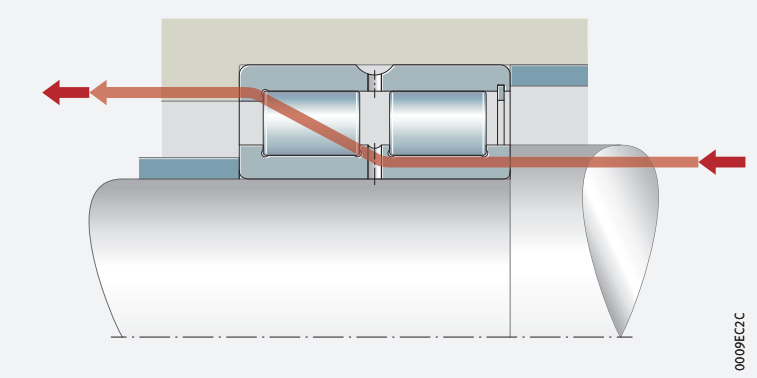

Calculation of permissible axial load – cylindrical rollers with conventional roller ends

Bearings with standard roller ends

The permissible axial load $F_{a\,per}$ can be calculated from the hydrodynamic load carrying capacity of the contact ➤*533*| *f* 1.

f 1
Permissible axial load – bearings of standard design

$$F_{a\,per} = k_S \cdot k_B \cdot d_M^{\,1,54} \cdot n^{-0,6} \leqq F_{a\,max}$$

Legend

$F_{a\,per}$	N	Permissible continuous axial load. In order to prevent unacceptably high temperatures in the bearing, $F_{a\,per}$ must not be exceeded
$F_{a\,max}$	N	Maximum continuous axial load in relation to rib fracture. In order to prevent unacceptably high pressures at the contact surfaces, $F_{a\,max}$ must not be exceeded
k_S	–	Factor as a function of lubrication method ➤*534*| ▦ *1*. The factor takes into consideration the lubrication method used for the bearing. The better the lubrication and, in particular, the heat dissipation, the higher the permissible axial load
k_B	–	Factor as a function of bearing series ➤*534*| ▦ *2*
d_M	mm	Mean bearing diameter $d_M = (D + d)/2$ ➤*548*| ▦
n	min^{-1}	Operating speed.

1 *Factor k_S*

Lubrication method	Factor k_S	
	from	up to
Standard greasing, no heat dissipation by the lubricant	1,5	3
Minimal heat dissipation, drip feed oil lubrication, oil mist lubrication, low operating viscosity ($\nu < 0{,}5 \cdot \nu_1$)	7,5	10
Poor heat dissipation, oil sump lubrication, oil spray lubrication, low oil flow	10	15
Good heat dissipation, recirculating oil lubrication (pressurised oil lubrication)	12	18
Very good heat dissipation, recirculating oil lubrication with oil cooling, high operating viscosity ($\nu > 2 \cdot \nu_1$)	16	24

The precondition for these k_S values is an operating viscosity of the lubricant of at least the reference viscosity ν_1 in accordance with DIN ISO 281:2010.

Doped lubricating oils should be used, such as CLP (DIN 51517) and HLP (DIN 51524) of ISO VG grades 32 to 460, as well as ATF oils (DIN 51502) and transmission oils (DIN 51512) of SAE viscosity grades 75W to 140W.

2 *Bearing factor k_B*

Series	k_B
SL0148	4,5
SL0149	11
SL1850	17
SL0450	17
SL04	10

Calculation of permissible axial load – cylindrical rollers with toroidal roller ends

For bearings with toroidal roller ends, the permissible axial loads are 50% higher ➤534 | f 2.

f 2 *Permissible axial load – bearings of TB design*

$$F_{a\,per} = 1{,}5 \cdot k_S \cdot k_B \cdot d_M^{1{,}54} \cdot n^{-0{,}6} \leqq F_{a\,max}$$

Calculation of maximum permissible axial load

For bearings with rollers of the standard or TB design, the maximum permissible axial load $F_{a\,max}$ ➤534 | f 3 is calculated from the rib strength and the security against wear. This must not be exceeded, even if $F_{a\,per}$ gives higher values ➤534 | f 4.

f 3 *Maximum axial load – bearings of standard and TB design*

$$F_{a\,max} = 0{,}075 \cdot k_B \cdot d_M^{2{,}1}$$

f 4 *Permissible axial load*

$$F_{a\,per} \leqq F_{a\,max}$$

Axial load carrying capacity of cylindrical roller bearings with annular slots (rope sheave bearings)

For cylindrical roller bearings with annular slots in the outer ring, the calculations of $F_{a\,per}$ and $F_{a\,max}$ cannot be used. For the axial load carrying capacity of these bearings, please consult Schaeffler.

4.3 Compensation of angular misalignments

The bearings do not permit any misalignments between the inner and outer ring, i. e. the bearing positions must be well aligned.

4.4 Lubrication

Oil or grease lubrication is possible

The cylindrical roller bearings are not greased. They must be lubricated with oil or grease. The bearings can be lubricated via the end faces of the outer ring as well as via a lubrication groove and lubrication holes in the outer ring.

Cylindrical roller bearings with annular slots (rope sheave bearings)

The bearings have an initial greasing

These bearings are supplied greased and can be relubricated via the outer ring or inner ring. The grease used is a lithium complex soap grease to GA08. Arcanol LOAD150 ➤*70* is suitable for relubrication. The greases named are highly suitable, due to their good moisture resistance and high load carrying capacity, for applications in rope sheaves at low to moderate speeds.

If there is any uncertainty regarding the suitability of the selected lubricant for the application, please consult Schaeffler or the lubricant manufacturer.

4.5 Sealing

Provide seals in the adjacent construction

The bearings are not sealed, i. e. sealing of the bearing position must be carried out in the adjacent construction. This must reliably prevent:

- moisture and contaminants from entering the bearing
- the egress of lubricant from the bearing

Cylindrical roller bearings with annular slots (rope sheave bearings)

The bearings are sealed on both sides

In the case of these bearings, the rolling element system is protected against contamination and moisture by polyurethane sealing rings on both sides of the bearing. The seals have low friction and are particularly resistant to climate and temperature. Where environmental conditions are particularly critical, sealing of the bearings can be improved further by means of additional seals, such as V rings, in the adjacent construction.

4.6 Speeds

Speeds in the product tables

The product tables generally give two speeds for the bearings:

- the kinematic limiting speed n_G
- the thermal speed rating $n_{\vartheta r}$

Lower speed capacity than bearings with cage

Due to the kinematic conditions, full complement cylindrical roller bearings do not achieve the high speeds that are possible when using cylindrical roller bearings with cage.

Limiting speeds

The limiting speed n_G is the kinematically permissible speed of the bearing. Even under favourable mounting and operating conditions, this value should not be exceeded without prior consultation with Schaeffler ➤*64*.

Bearings with solid brass cages have a significantly higher limiting speed for oil lubrication.

Values for grease lubrication

For the grease lubrication of bearings without seals or shields, 85% of the value stated in the product tables is permissible in each case.

For the grease lubrication of bearings with solid brass cages, 65% of the value stated in the product tables is permissible in each case.

Reference speeds

✎ *$n_{\vartheta r}$ is used to calculate n_{ϑ}*

The thermal speed rating $n_{\vartheta r}$ is not an application-oriented speed limit, but is a calculated ancillary value for determining the thermally safe operating speed n_{ϑ} ➤*64*.

✎ *Bearings with contact seals*

For bearings with contact seals, no reference speeds are defined in accordance with DIN ISO 15312:2004. As a result, only the limiting speed n_G is given in the product tables for these bearings.

4.7 Noise

The Schaeffler Noise Index (SGI) has been developed as a new feature for comparing the noise level of different bearing types and series. As a result, a noise evaluation of rolling bearings can now be carried out for the first time.

Schaeffler Noise Index

The SGI value is based on the maximum permissible noise level of a bearing in accordance with internal standards, which is calculated on the basis of ISO 15242. In order that different bearing types and series can be compared, the SGI value is plotted against the basic static load rating C_0.

This permits direct comparisons between bearings with the same load carrying capacity. The upper limit value is given in each of the diagrams. This means that the average noise level of the bearings is lower than illustrated in the diagram.

The Schaeffler Noise Index is an additional performance characteristic in the selection of bearings for noise-sensitive applications. The specific suitability of a bearing for an application in terms of installation space, load carrying capacity or speed limit for example, must be checked independently of this.

The Noise Index is currently available for the main series. Additional series will be updated and introduced in subsequent publications.

Further information:

- ***medias*** *https://medias.schaeffler.com*

8
Schaeffler Noise Index for double row full complement cylindrical roller bearings

SGI = *Schaeffler Noise Index*
C_0 = *basic static load rating*

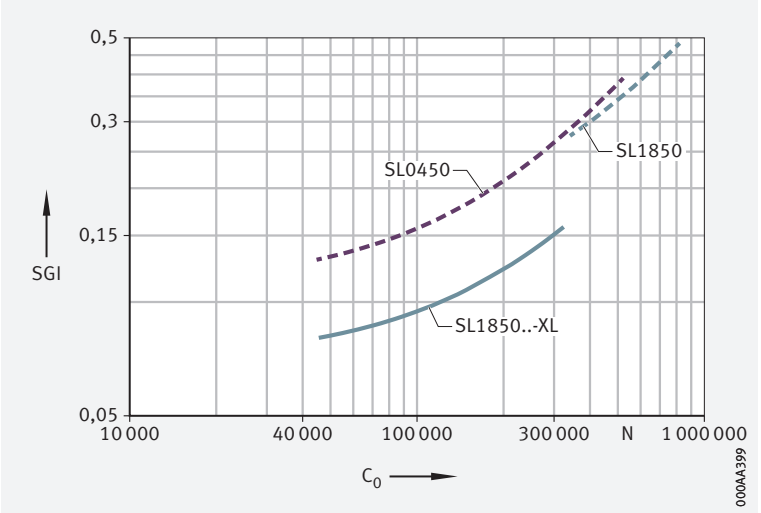

4.8 Temperature range

✎ *Limiting values*

The operating temperature of the bearings is limited by:

- the dimensional stability of the bearing rings and cylindrical rollers
- the lubricant
- the seals

Possible operating temperatures of double row cylindrical roller bearings ➤ *537* | ▦ *3*.

▦ *3*
Permissible temperature ranges

Operating temperature	Open full complement bearings	Rope sheave bearings
	–30 °C to +120 °C	–20 °C to +80 °C, limited by the lubricant, cage material and seal material –40 °C to +80 °C with greasing by means of GA22

In the event of anticipated temperatures which lie outside the stated values, please contact Schaeffler.

4.9 Cages

Full complement cylindrical roller bearings do not have a cage for guidance and separation of the rolling elements. The cylindrical rollers are guided by the ribs on the bearing rings.

4.10 Internal clearance

Radial internal clearance

✎ *The standard is CN*

Double row full complement cylindrical roller bearings are manufactured as standard with the radial internal clearance CN (normal) ➤*538*|▦*4*. CN is not stated in the designation.

Certain sizes are also available by agreement with the larger internal clearance C3, C4 and C5 ➤*538*|▦*4*.

The values for radial internal clearance correspond to DIN 620-4:2004 (ISO 5753-1:2009) ➤*538*|▦*4*. They are valid for bearings which are free from load and measurement forces (without elastic deformation).

▦ **4** *Radial internal clearance of double row full complement cylindrical roller bearings*

Nominal bore diameter d mm		Radial internal clearance							
		CN (Group N) µm		C3 (Group 3) µm		C4 (Group 4) µm		C5 (Group 5) µm	
over	incl.	min.	max.	min.	max.	min.	max.	min.	max.
–	24	20	45	35	60	50	75	65	90
24	30	20	45	35	60	50	75	70	95
30	40	25	50	45	70	60	85	80	105
40	50	30	60	50	80	70	100	95	125
50	65	40	70	60	90	80	110	110	140
65	80	40	75	65	100	90	125	130	165
80	100	50	85	75	110	105	140	155	190
100	120	50	90	85	125	125	165	180	220
120	140	60	105	100	145	145	190	200	245
140	160	70	120	115	165	165	215	225	275
160	180	75	125	120	170	170	220	250	300
180	200	90	145	140	195	195	250	275	330
200	225	105	165	160	220	220	280	305	365
225	250	110	175	170	235	235	300	330	395
250	280	125	195	190	260	260	330	370	440
280	315	130	205	200	275	275	350	410	485
315	355	145	225	225	305	305	385	455	535
355	400	190	280	280	370	370	460	510	600

Radial internal clearance of cylindrical roller bearings with annular slots (rope sheave bearings)

The correct radial internal clearance is of decisive importance for the correct function of rope sheaves. The radial internal clearance group is dependent on the material of the rope sheave ➤*538*|▦*5*.

▦ **5** *Radial internal clearance of cylindrical roller bearings with annular slots for the support of rope sheaves as a function of the material of adjacent parts – recommendation*

Nominal bore diameter d mm		Material of rope sheave	
		Steel	Plastic
		Internal clearance group of bearing	
over	incl.		
–	85	CN or C3	C5
85	300	C3	

4.11 Dimensions, tolerances

Dimension standards

The main dimensions of cylindrical roller bearings correspond to ISO 15:2017 (DIN 616:2000).

Chamfer dimensions

The limiting dimensions for chamfer dimensions correspond to DIN 620-6:2004. Overview and limiting values ➤137|7.11. Nominal value of chamfer dimension ➤548|.

Tolerances

The dimensional and running tolerances of the cylindrical roller bearings correspond to the tolerance class Normal in accordance with ISO 492:2014. Tolerance values in accordance with ISO 492 ➤124|8.

4.12 Suffixes

Suffixes describe the design and features of a bearing in more detail.

6 *Suffixes and corresponding descriptions, double row full complement cylindrical roller bearings*

Suffix	Description of suffix	
BR	Black oxide coated	Available by agreement
C3	Radial internal clearance C3 (larger than normal)	
C4	Radial internal clearance C4 (larger than C3)	
C5	Radial internal clearance C5 (larger than C4)	
TB	Bearing with increased axial load carrying capacity	Standard, dependent on bore code and bearing series
XL	X-life bearing	

7 *Suffixes and corresponding descriptions, cylindrical roller bearings with annular slots (rope sheave bearings)*

Suffix	Description of suffix	
C3	Radial internal clearance C3 (larger than normal)	Special design, available by agreement
C4	Radial internal clearance C4 (larger than C3)	
C5	Radial internal clearance C5 (larger than C4)	
D	Improved outer ring profile, with an enlarged load-bearing area and optimised edge transitions	Standard
GA22	Bearing greased with lithium soap grease GA22 for expanded temperature range	Special design, available by agreement
P	Contact seal on one side	
PP	Contact seal on both sides	Standard
RR	Corrosion-resistant design, with Corrotect coating	Special design, available by agreement
2NR	Supplied with two loose-packed retaining rings WRE	
2WR	Supplied with two loose-packed retaining rings WR	
–	Without seals	

4.13 Structure of bearing designation

With ***medias*** interchange, equivalent Schaeffler bearing designations can be determined for bearing designations from other rolling bearing manufacturers *https://www.schaeffler.de/std/1B69*.

✎ *Examples of composition of bearing designation*

The designation of bearings follows a set model. Examples are shown in ➤ *540* | *9* and ➤ *540* | *10*. The composition of designations is subject to DIN 623-1 ➤ *102* | *10*.

9
Double row full complement cylindrical roller bearing (semi-locating bearing): designation structure

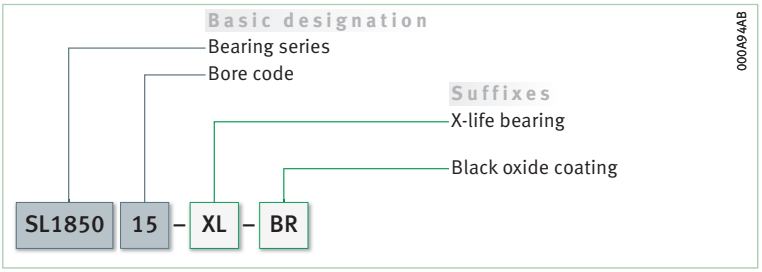

10
Double row full complement cylindrical roller bearing (rope sheave bearing): designation structure

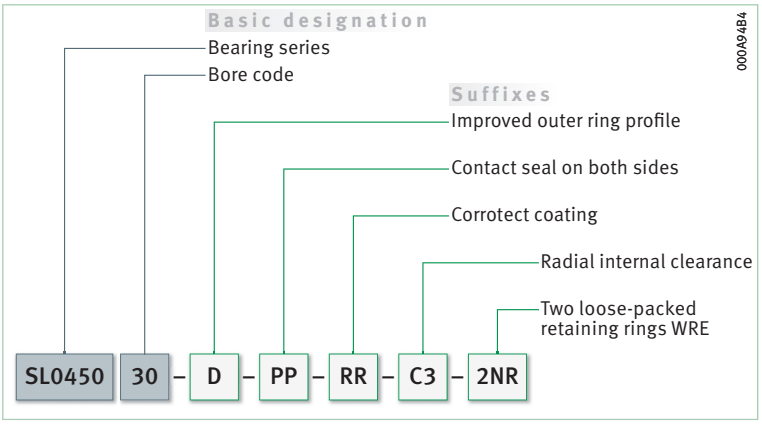

4.14 Dimensioning

Equivalent dynamic bearing load

✎ *$P = F_r$ under purely radial load of constant magnitude and direction*

The basic rating life equation $L = (C_r/P)^p$ used in the dimensioning of bearings under dynamic load assumes a load of constant magnitude and direction. In radial bearings, this is a purely radial load F_r. If this condition is met, the bearing load F_r is used in the rating life equation for P ($P = F_r$).

Bearings with non-locating bearing function and cylindrical roller bearings with annular slots (rope sheave bearings)

✎ *$P = F_r$*

Non-locating bearings can only support radial loads, rope sheave bearings only have a small axial load carrying capacity. For these bearings ➤ *540* | *f 5*.

f 5
Equivalent dynamic load

$$P = F_r$$

Cylindrical roller bearings with semi-locating and locating bearing function

✎ *P is a substitute force for combined load and various load cases*

If the condition described above is not met, i. e. if, in addition to the radial force F_r, there is also an axial force F_a, a constant radial force must first be determined for the rating life calculation that (in relation to the rating life) represents an equivalent load. This force is known as the equivalent dynamic bearing load P.

✎ $F_a/F_r \leqq e$ or $F_a/F_r > e$

The calculation of P is dependent on the load ratio F_a/F_r and the calculation factors e and Y ➤541 | 6 and ➤541 | 7.

6 *Equivalent dynamic load*

$$\frac{F_a}{F_r} \leqq e \quad \Rightarrow \quad P = F_r$$

7 *Equivalent dynamic load*

$$\frac{F_a}{F_r} > e \quad \Rightarrow \quad P = 0{,}92 \cdot F_r + Y \cdot F_a$$

Legend

P	N	Equivalent dynamic bearing load
F_r	N	Radial load
F_a	N	Axial load
e, Y	–	Factors ➤541 | 8.

8 *Factors e and Y*

Bearing series	Calculation factors	
	e	Y
SL1850	0,2	0,6
SL0148, SL0149	0,24	0,5

Equivalent static bearing load

✎ $P_0 \geqq F_{0r}$

For cylindrical roller bearings subjected to static load ➤541 | 8.

8 *Equivalent static load*

$$P_0 = F_{0r}$$

Legend

P_0	N	Equivalent static bearing load
F_{0r}	N	Largest radial load present (maximum load).

Static load safety factor

✎ $S_0 = C_0/P_0$

In addition to the basic rating life L (L_{10h}), it is also always necessary to check the static load safety factor S_0 ➤541 | 9.

9 *Static load safety factor*

$$S_0 = \frac{C_0}{P_0}$$

Legend

S_0	–	Static load safety factor
C_0	N	Basic static load rating
P_0	N	Equivalent static bearing load.

4.15 Minimum load

✎ *In order to prevent damage due to slippage, a minimum radial load of $P > C_{0r}/60$ is necessary during continuous operation*

In order that no slippage occurs between the contact partners, the cylindrical roller bearings must be constantly subjected to a sufficiently high radial load. For continuous operation, experience shows that a minimum radial load of the order of $P > C_{0r}/60$ is thus necessary. In most cases, however, the radial load is already higher than the requisite minimum load due to the weight of the supported parts and the external forces.

If the minimum radial load is lower than indicated above, please consult Schaeffler.

4.16 Design of bearing arrangements

Support bearing rings over their entire circumference and width

In order to allow full utilisation of the load carrying capacity of the bearings and achieve the requisite rating life, the bearing rings must be rigidly and uniformly supported by means of contact surfaces over their entire circumference and over the entire width of the raceway. Support can be provided by means of a cylindrical seating surface. The seating and contact surfaces should not be interrupted by grooves, holes or other recesses. The accuracy of mating parts must meet specific requirements ➤544 | 9 to ➤545 | 12.

Radial location

For secure radial location, tight fits are necessary

In addition to supporting the rings adequately, the bearings must also be securely located in a radial direction, to prevent creep of the bearing rings on the mating parts under load. This is generally achieved by means of tight fits between the bearing rings and the mating parts. If the rings are not secured adequately or correctly, this can cause severe damage to the bearings and adjacent machine parts. Influencing factors, such as the conditions of rotation, magnitude of the load, internal clearance, temperature conditions, design of the mating parts and the mounting and dismounting options must be taken into consideration in the selection of fits.

If shock type loads occur, tight fits (transition fit or interference fit) are required to prevent the rings from coming loose at any point. Clearance, transition or interference fits ➤152 | 6 and ➤160 | 7.

The following information provided in Technical principles must be taken into consideration in the design of bearing arrangements:

- criteria for selection of fits ➤146
- conditions of rotation ➤147
- tolerance classes for cylindrical shaft seats (radial bearings) ➤149 | 2
- shaft fits ➤152 | 6
- tolerance classes for bearing seats in housings (radial bearings) ➤150 | 4
- housing fits ➤160 | 7

Radial location of cylindrical roller bearings with annular slots (rope sheave bearings)

The outer ring must have an interference fit to achieve rigid seating

The axial loads occurring cannot be securely transmitted by the retaining rings. Transmission of the loads is only possible if sufficient joint pressure is present. Due to the operating conditions present in rope sheave bearing arrangements, an interference fit between the outer ring and rope sheave is absolutely critical in order to achieve correct bearing function and load transmission. The joint pressure must be between p_{min} = 2 N/mm^2 and p_{max} = 25 N/mm^2. The internal clearance has a considerable influence on bearing function ➤538|▦ 5.

Axial location

The bearings must also be securely located in an axial direction

As a tight fit alone is not normally sufficient to also locate the bearing rings securely on the shaft and in the housing bore in an axial direction, this must usually be achieved by means of an additional axial location or retention method. The axial location of the bearing rings must be matched to the type of bearing arrangement. Shaft and housing shoulders, housing covers, nuts, spacer rings, retaining rings, adapter and withdrawal sleeves etc., are fundamentally suitable; example ➤546|⧉ 12.

Axial location of cylindrical roller bearings with annular slots (rope sheave bearings)

Axial location is carried out by means of retaining rings

The annular slots allow axial location of the outer rings using retaining rings ➤544|⧉ 11. Suitable fasteners are WRE rings or rings in accordance with DIN 471. Locating rings are not included in the scope of delivery. The design 2NR is supplied with two retaining rings WRE packed loose. The split inner ring must be axially secured ➤544|⧉ 11.
The fasteners must not be subjected to axial load.



Arrangement of several rope sheaves adjacent to each other

If housing tolerances are present or several rope sheaves are arranged adjacent to each other, axial clearance may occur between the inner rings. This must always be prevented by means of design measures. For example, shims are suitable for this purpose.

11
Cylindrical roller bearing with annular slots (rope sheave bearing) – location of outer ring, support of ribs

① *Retaining ring*

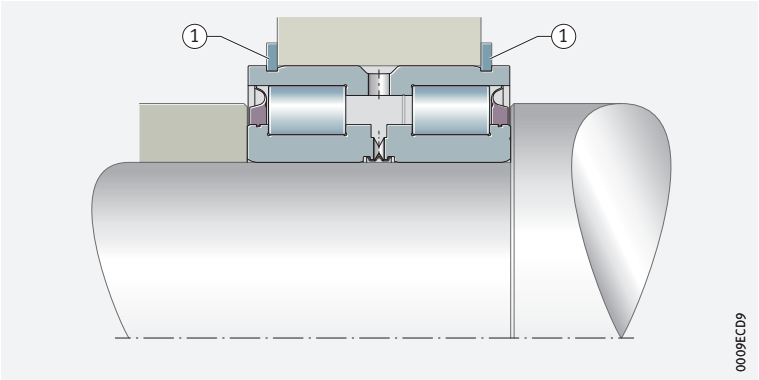

Dimensional, geometrical and running accuracy of cylindrical bearing seats

A minimum of IT6 should be provided for the shaft seat and a minimum of IT7 for the housing seat

The accuracy of the cylindrical bearing seat on the shaft and in the housing should correspond to the accuracy of the bearing used. For cylindrical roller bearings with the tolerance class Normal, the shaft seat should correspond to a minimum of standard tolerance grade IT6 and the housing seat to a minimum of IT7. Guide values for the geometrical and positional tolerances of the bearing seating surfaces ➤*544*| 9. Tolerances t_1 to t_3 in accordance with ➤*170*| 11. Numerical values for IT grades ➤*544*| 10.

9
Guide values for the geometrical and positional tolerances of bearing seating surfaces

Bearing tolerance class		Bearing seating surface	Standard tolerance grades to ISO 286-1 (IT grades)			
to ISO 492	to DIN 620		Diameter tolerance	Roundness tolerance t_1	Parallelism tolerance t_2	Total axial runout tolerance of abutment shoulder t_3
Normal	PN (P0)	Shaft	IT6 (IT5)	Circumferential load IT4/2	Circumferential load IT4/2	IT4
				Point load IT5/2	Point load IT5/2	
		Housing	IT7 (IT6)	Circumferential load IT5/2	Circumferential load IT5/2	IT5
				Point load IT6/2	Point load IT6/2	

10
Numerical values for ISO standard tolerances (IT grades) to ISO 286-1:2010

IT grade	Nominal dimension in mm							
	over **18**	**30**	**50**	**80**	**120**	**180**	**250**	**315**
	incl. **30**	**50**	**80**	**120**	**180**	**250**	**315**	**400**
	Values in µm							
IT4	6	7	8	10	12	14	16	18
IT5	9	11	13	15	18	20	23	25
IT6	13	16	19	22	25	29	32	36
IT7	21	25	30	35	40	46	52	57

Roughness of cylindrical bearing seating surfaces

Ra must not be too high

The roughness of the bearing seats must be matched to the tolerance class of the bearings. The mean roughness value Ra must not be too high, in order to maintain the interference loss within limits. The shafts must be ground, while the bores must be precision turned. Guide values as a function of the IT grade of bearing seating surfaces ➤545|11.

11
Roughness values for cylindrical bearing seating surfaces – guide values

Nominal diameter of the bearing seat d (D) mm		Recommended mean roughness value for ground bearing seats Ramax µm			
		Diameter tolerance (IT grade)			
over	incl.	IT7	IT6	IT5	IT4
–	80	1,6	0,8	0,4	0,2
80	500	1,6	1,6	0,8	0,4

Bearing seat design (roughness) for cylindrical roller bearings with annular slots (rope sheave bearings)

Recommended roughness values for bearing seating surfaces ➤545|12.

12
Roughness for bearing seating surfaces on the shaft and in the housing bore for cylindrical roller bearings with annular slots – recommendation

Nominal diameter of bearing seat d (D) mm		Roughness	
over	incl.	Shaft	Housing bore
20	300	Rz 4	Rz 16

Mounting dimensions for the contact surfaces of bearing rings

The contact surfaces for the rings must be of sufficient height

The mounting dimensions of the shaft and housing shoulders, and spacer rings etc., must ensure that the contact surfaces for the bearing rings are of sufficient height. The transition from the bearing seat to the abutment shoulder must be designed with rounding to DIN 5418:1993 or an undercut to DIN 509:2006. Proven mounting dimensions for the radii and diameters of abutment shoulders are given in the product tables ➤548|. These dimensions are limiting dimensions (maximum or minimum dimensions); the actual values should not be higher or lower than specified.

Rib support in axially loaded bearings

Ribs under axial load must be supported over their entire height and entire circumference ➤548| and ➤546|12. The size and axial runout accuracy of the contact surfaces on the inner ring rib must be observed especially in the case of cylindrical roller bearings subjected to high loads, since these factors also influence the uniformity of the rib load and the running accuracy of the shaft. This means that the ribs may be subjected to damaging alternating stresses even in the case of very small misalignments. If the mounting dimensions indicated in the product tables are observed, the problems described can be reliably avoided ➤548|.

Support in semi-locating bearings

In semi-locating bearings, it is sufficient to support the bearing rings on one side, on the rib supporting the axial load ➤*546*|*12*.

12
Support of inner ring rib supporting axial load

d_c = *recommended height of shaft shoulder with axially loaded rib*
Arrow = *force flow*

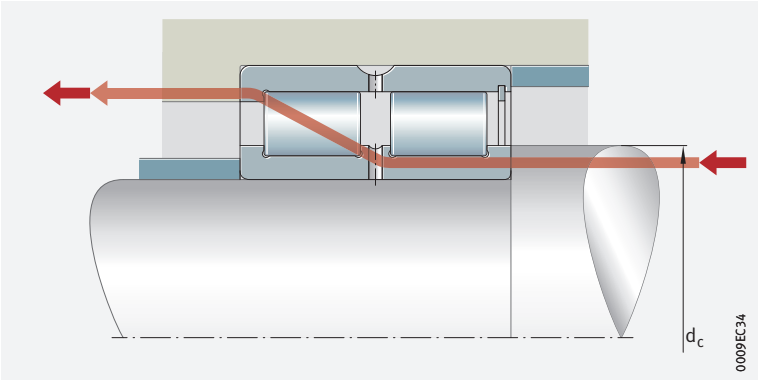

Support of sealing rings in cylindrical roller bearings with annular slots (rope sheave bearings)

Observe the abutment dimension of the sealing rings

The sealing rings must be supported to a sufficient height that they are not pressed out during lubrication of the bearings ➤*546*|*13*.
The dimension d_2 in the product tables must be observed ➤*556*|▦.

13
Rope sheave bearings – support of sealing rings

d_2 = *abutment dimension*
① *Sealing ring*

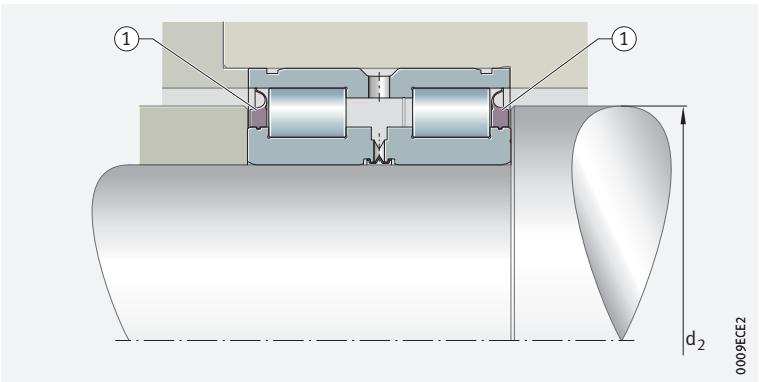

4.17 Mounting and dismounting

The mounting and dismounting options for cylindrical roller bearings, by thermal, hydraulic or mechanical methods, must be taken into consideration in the design of the bearing position.

Mounting and dismounting of cylindrical roller bearings with annular slots (rope sheave bearings)

Before the bearing is pressed into the rope sheave, it is recommended that the bearing seating surfaces should be lightly oiled or alternatively rubbed or sprayed with dry lubricant. In order to prevent bearing damage and inaccurate seating of the bearings, pressing in should be carried out on a suitable device with control of force and travel.

During mounting and dismounting of the bearings, the mounting forces must never be directed through the rolling elements, sealing rings or the fasteners on the split bearing ring.

Schaeffler Mounting Handbook

Rolling bearings must be handled with great care

Rolling bearings are well-proven precision machine elements for the design of economical and reliable bearing arrangements, which offer high operational security. In order that these products can function correctly and achieve the envisaged operating life without detrimental effect, they must be handled with care.

The Schaeffler Mounting Handbook MH 1 gives comprehensive information about the correct storage, mounting, dismounting and maintenance of rotary rolling bearings *https://www.schaeffler.de/std/1D53*. It also provides information which should be observed by the designer, in relation to the mounting, dismounting and maintenance of bearings, in the original design of the bearing position. This book is available from Schaeffler on request.

4.18 Legal notice regarding data freshness

The further development of products may also result in technical changes to catalogue products

Of central interest to Schaeffler is the further development and optimisation of its products and the satisfaction of its customers. In order that you, as the customer, can keep yourself optimally informed about the progress that is being made here and with regard to the current technical status of the products, we publish any product changes which differ from the printed version in our electronic product catalogue.

We therefore reserve the right to make changes to the data and illustrations in this catalogue. This catalogue reflects the status at the time of printing. More recent publications released by us (as printed or digital media) will automatically precede this catalogue if they involve the same subject. Therefore, please always use our electronic product catalogue to check whether more up-to-date information or modification notices exist for your desired product.

Link to electronic product catalogue

The following link will take you to the Schaeffler electronic product catalogue: *https://medias.schaeffler.com*.

4.19 Further information

In addition to the data in this chapter, the following chapters in Technical principles must also be observed in the design of bearing arrangements:

- Determining the bearing size ➤*34*
- Rigidity ➤*54*
- Friction and increases in temperature ➤*56*
- Speeds ➤*64*
- Bearing data ➤*97*
- Lubrication ➤*70*
- Sealing ➤*185*
- Design of bearing arrangements ➤*141*
- Mounting and dismounting ➤*194*

Double row full complement cylindrical roller bearings

Semi-locating, locating and non-locating bearings

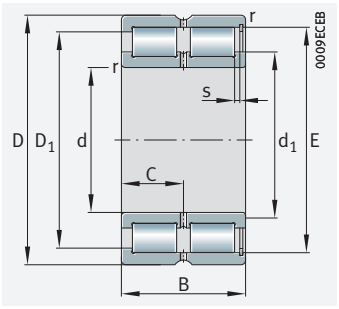

SL1850
Semi-locating bearing

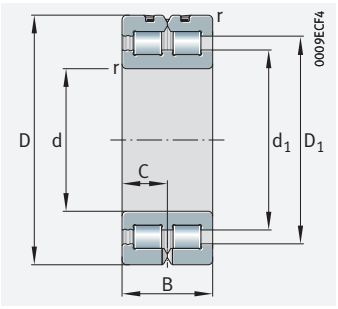

SL0148, SL0149
Locating bearings

d = 20 – 120 mm

Main dimensions			Basic load ratings		Fatigue limit load	Limiting speed	Speed rating	Mass	Designation ➤*539*|*4.12* ➤*540*|*4.13* X-life ➤*531*		
d	D	B	dyn. C_r	stat. C_{0r}	C_{ur}	n_G	$n_{\vartheta r}$	m	Semi-locating bearing	Locating bearing	Non-locating bearing
			N	N	N	min^{-1}	min^{-1}	≈ kg			
20	42	30	53 000	52 000	9 100	11 400	7 400	0,2	**SL185004-XL**	–	–
25	47	30	60 000	64 000	11 300	9 500	6 000	0,23	**SL185005-XL**	–	–
30	55	34	78 000	84 000	15 200	8 100	5 300	0,35	**SL185006-XL**	–	–
35	62	36	94 000	107 000	19 200	7 100	4 750	0,46	**SL185007-XL**	–	–
40	68	38	113 000	133 000	22 800	6 300	4 200	0,56	**SL185008-XL**	–	–
45	75	40	120 000	148 000	25 500	5 800	3 950	0,71	**SL185009-XL**	–	–
50	80	40	151 000	188 000	30 500	5 300	3 450	0,76	**SL185010-XL**	–	–
55	90	46	206 000	275 000	46 000	4 550	2 900	1,16	**SL185011-XL**	–	–
60	85	25	70 000	121 000	17 700	4 650	2 650	0,49	–	**SL014912**	–
	85	25	70 000	121 000	17 700	4 650	2 650	0,47	–	–	**SL024912**
	95	46	212 000	285 000	48 500	4 350	2 800	1,24	**SL185012-XL**	–	–
65	100	46	223 000	315 000	53 000	4 000	2 500	1,32	**SL185013-XL**	–	–
70	100	30	106 000	185 000	27 500	3 900	2 330	0,78	–	**SL014914**	–
	100	30	106 000	185 000	27 500	3 900	2 330	0,75	–	–	**SL024914**
	110	54	265 000	350 000	60 000	3 750	2 650	1,85	**SL185014-XL**	–	–
75	115	54	275 000	385 000	66 000	3 450	2 370	1,93	**SL185015-XL**	–	–
80	110	30	112 000	206 000	30 500	3 550	2 090	0,88	–	**SL014916**	–
	110	30	112 000	206 000	30 500	3 550	2 090	0,85	–	–	**SL024916**
	125	60	330 000	440 000	83 000	3 200	2 320	2,59	**SL185016-XL**	–	–
85	130	60	300 000	465 000	70 000	3 050	2 210	2,72	**SL185017**	–	–
90	125	35	153 000	290 000	39 500	3 050	1 870	1,35	–	**SL014918**	–
	125	35	153 000	290 000	39 500	3 050	1 870	1,3	–	–	**SL024918**
	140	67	350 000	550 000	82 000	2 850	2 140	3,62	**SL185018**	–	–
100	140	40	191 000	370 000	48 500	2 700	1 720	1,95	–	**SL014920**	–
	140	40	191 000	370 000	48 500	2 700	1 720	1,9	–	–	**SL024920**
	150	67	370 000	600 000	87 000	2 600	1 930	3,94	**SL185020**	–	–
110	150	40	198 000	400 000	51 000	2 500	1 600	2,15	–	**SL014922**	–
	150	40	198 000	400 000	51 000	2 500	1 600	2,1	–	–	**SL024922**
	170	80	485 000	770 000	111 000	2 350	1 730	6,32	**SL185022**	–	–
120	165	45	222 000	440 000	56 000	2 260	1 540	2,95	–	**SL014924**	–
	165	45	222 000	440 000	56 000	2 260	1 540	2,85	–	–	**SL024924**
	180	80	510 000	850 000	119 000	2 160	1 530	6,77	**SL185024**	–	–

medias *https://www.schaeffler.de/std/1F9A*

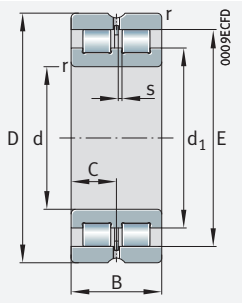

SL0248, SL0249
Non-locating bearings

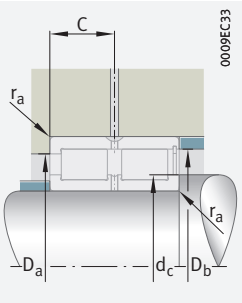

Mounting dimensions for semi-locating bearings

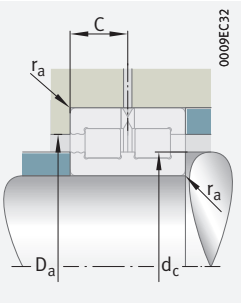

Mounting dimensions for locating bearings

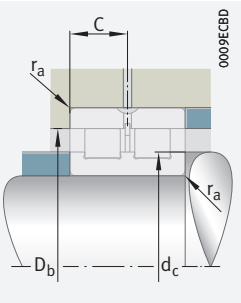

Mounting dimensions for non-locating bearings

d	Designation to DIN 5412	Dimensions						Mounting dimensions			
		r min.	s	C	d_1 ≈	D_1 ≈	E	d_c	D_a	D_b	r_a max.
20	–	0,6	1	15	28,4	33,3	36,8	28	33,5	36,5	0,6
25	–	0,6	1	15	34,5	39	42,5	34,5	39	42,5	0,6
30	–	1	1,5	17	40	45,3	49,6	40	45,5	49,5	1
35	–	1	1,5	18	44,9	51,2	55,5	44,5	51,5	55,5	1
40	–	1	1,5	19	50,5	57,2	61,7	50,5	57,5	61,5	1
45	–	1	1,5	20	55,3	62,6	66,9	55	63	66,5	1
50	–	1	1,5	20	59,1	67,6	72,3	59	68	72	1
55	–	1,1	1,5	23	68,5	78,7	83,5	68,5	79	83,5	1,1
60	NNC4912V	1	–	12,5	70,3	73,5	–	70	73,5	–	1
	NNCL4912V	1	1	12,5	70,3	–	77,51	70,5	–	77,5	1
	–	1,1	1,5	23	71,7	81,9	86,7	71,5	82	86,5	1,1
65	–	1,1	1,5	23	78,1	88,3	93,1	78	88,5	93	1,1
70	NNC4914V	1	–	15	82,5	87,4	–	82,5	87,5	–	1
	NNCL4914V	1	1	15	82,5	–	91,87	82,5	–	91,5	1
	–	1,1	3	27	81,5	95,7	100,3	81,5	96	100	1,1
75	–	1,1	3	27	89	102,9	107,9	89	103	107,5	1,1
80	NNC4916V	1	–	15	91,4	96,2	–	91	96,5	–	1
	NNCL4916V	1	1	15	91,4	–	100,78	91,5	–	100,5	1
	–	1,1	3,5	30	95	111,7	117,4	95	112	117	1,1
85	–	1,1	3,5	30	99	116,1	122	99	116,5	121,5	1,1
90	NNC4918V	1,1	–	17,5	103,9	110,7	–	103,5	111	–	1,1
	NNCL4918V	1,1	1,5	17,5	103	–	115,2	103	–	115	1,1
	–	1,5	4	33,5	106,1	124,5	130,7	106	124,5	130,5	1,5
100	NNC4920V	1,1	–	20	116,4	125	–	116	125	–	1,1
	NNCL4920V	1,1	2	20	116,4	–	129,6	116,5	–	129,5	1,1
	–	1,5	4	33,5	115,7	134	140,2	115,5	134	140	1,5
110	NNC4922V	1,1	–	20	125	133,6	–	125	134	–	1,1
	NNCL4922V	1,1	2	20	125	–	138,2	125	–	138	1,1
	–	2	5	40	127,3	149,3	156,7	127	149,5	156,5	2
120	NNC4924V	1,1	–	22,5	138,6	148,6	–	138,5	149	–	1,1
	NNCL4924V	1,1	3	22,5	138,6	–	153,55	139	–	153,5	1,1
	–	2	5	40	138,8	160,7	168,2	138,5	161	168	2

Double row full complement cylindrical roller bearings

Semi-locating, locating and non-locating bearings

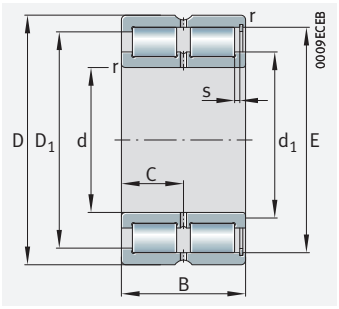

SL1850
Semi-locating bearing

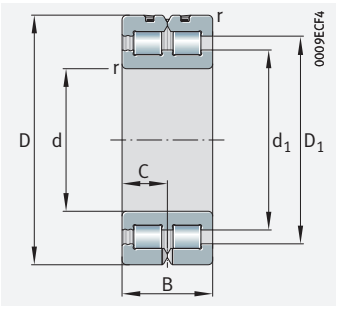

SL0148, SL0149
Locating bearings

d = 130 – 190 mm

Main dimensions			Basic load ratings		Fatigue limit load	Limiting speed	Speed rating	Mass	Designation ➤*539*|*4.12* ➤*540*|*4.13*		
d	D	B	dyn. C_r N	stat. C_{0r} N	C_{ur} N	n_G min^{-1}	$n_{\vartheta r}$ min^{-1}	m ≈ kg	Semi-locating bearing	Locating bearing	Non-locating bearing
130	180	50	260 000	510 000	64 000	2 090	1 500	3,95	–	**SL014926**	–
	180	50	260 000	510 000	64 000	2 090	1 500	3,8	–	–	**SL024926**
	200	95	730 000	1 210 000	167 000	1 990	1 340	10,2	**SL185026**	–	–
140	190	50	270 000	550 000	67 000	1 950	1 370	4,2	–	**SL014928**	–
	190	50	270 000	550 000	67 000	1 950	1 370	4,1	–	–	**SL024928**
	210	95	770 000	1 330 000	180 000	1 820	1 180	11,1	**SL185028**	–	–
150	190	40	231 000	530 000	63 000	1 900	1 270	2,9	–	**SL014830**	–
	190	40	231 000	530 000	63 000	1 900	1 270	2,8	–	–	**SL024830**
	210	60	410 000	820 000	106 000	1 790	1 200	6,65	–	**SL014930**	–
	210	60	410 000	820 000	106 000	1 790	1 200	6,45	–	–	**SL024930**
	225	100	810 000	1 390 000	186 000	1 740	1 150	13,3	**SL185030**	–	–
160	200	40	237 000	560 000	66 000	1 800	1 200	3,1	–	**SL014832**	–
	200	40	237 000	560 000	66 000	1 800	1 200	3	–	–	**SL024832**
	220	60	425 000	880 000	112 000	1 660	1 080	7	–	**SL014932**	–
	220	60	425 000	880 000	112 000	1 660	1 080	6,8	–	–	**SL024932**
	240	109	930 000	1 610 000	210 000	1 600	1 030	12,2	**SL185032**	–	–
170	215	45	260 000	600 000	70 000	1 670	1 180	4,1	–	**SL014834**	–
	215	45	260 000	600 000	70 000	1 670	1 180	3,95	–	–	**SL024834**
	230	60	435 000	930 000	116 000	1 580	1 010	7,35	–	**SL014934**	–
	230	60	435 000	930 000	116 000	1 580	1 010	7,1	–	–	**SL024934**
	260	122	1 200 000	2 110 000	270 000	1 480	900	22,5	**SL185034**	–	–
180	225	45	270 000	640 000	73 000	1 560	1 070	4,3	–	**SL014836**	–
	225	45	270 000	640 000	73 000	1 560	1 070	4,15	–	–	**SL024836**
	250	69	570 000	1 200 000	149 000	1 480	920	10,8	–	**SL014936**	–
	250	69	570 000	1 200 000	149 000	1 480	920	10,5	–	–	**SL024936**
	280	136	1 390 000	2 480 000	315 000	1 370	820	29,9	**SL185036-TB**	–	–
190	240	50	310 000	730 000	82 000	1 480	1 030	5,65	–	**SL014838**	–
	240	50	310 000	730 000	82 000	1 480	1 030	5,45	–	–	**SL024838**
	260	69	580 000	1 270 000	155 000	1 410	860	11,2	–	**SL014938**	
	260	69	580 000	1 270 000	155 000	1 410	860	10,9	–	–	**SL024938**
	290	136	1 430 000	2 600 000	325 000	1 320	770	31,3	**SL185038-TB**	–	–

medias *https://www.schaeffler.de/std/1F9A*

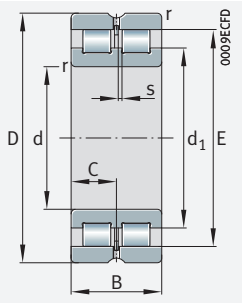

SL0248, SL0249
Non-locating bearings

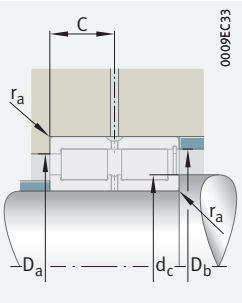

Mounting dimensions
for semi-locating bearings

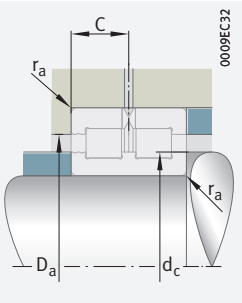

Mounting dimensions
for locating bearings

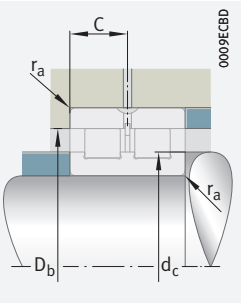

Mounting dimensions
for non-locating bearings

d	Designation to DIN 5412	Dimensions						Mounting dimensions			
		r min.	s	C	d_1 ≈	D_1 ≈	E	d_c	D_a	D_b	r_a max.
130	NNC4926V	1,5	–	25	148,4	160	–	148	160	–	1,5
	NNCL4926V	1,5	4	25	149,5	–	165,4	149,5	–	165	1,5
	–	2	5	47,5	148,6	175,5	184,4	148,5	175,5	184	2
140	NNC4928V	1,5	–	25	159	170,5	–	159	170,5	–	1,5
	NNCL4928V	1,5	4	25	160	–	175,9	160	–	175,5	1,5
	–	2	5	47,5	162,6	189,5	198,4	162,5	189,5	198	2
150	NNC4830V	1,1	–	20	165,1	174,2	–	165	174,5	–	1,1
	NNCL4830V	1,1	2	20	165,1	–	178,3	165,5	–	178	1,1
	NNC4930V	2	–	30	171,8	187,2	–	171,5	187,5	–	2
	NNCL4930V	2	4	30	171,8	–	192,77	172	–	192,5	2
	–	2	6	50	170	198	207,5	170	198	207	2
160	NNC4832V	1,1	–	20	173,7	182,8	–	173,5	183	–	1,1
	NNCL4832V	1,1	2	20	173,7	–	186,9	174	–	186,5	1,1
	NNC4932V	2	–	30	184,2	200,3	–	184	200,5	–	2
	NNCL4932V	2	4	30	184,2	–	206,16	184,5	–	206	2
	–	2,1	6	54,5	184,8	215,8	224,8	184,5	216	224,5	2,1
170	NNC4834V	1,1	–	22,5	186,3	197	–	186	197	–	1,1
	NNCL4834V	1,1	3	22,5	186,3	–	201,3	186,5	–	201	1,1
	NNC4934V	2	–	30	193,1	209,1	–	193	209,5	–	2
	NNCL4934V	2	4	30	193,1	–	215,08	193,5	–	215	2
	–	2,1	6	61	198	232,7	242,9	198	233	242,5	2,1
180	NNC4836V	1,1	–	22,5	199,1	209,8	–	199	210	–	1,1
	NNCL4836V	1,1	3	22,5	199,1	–	214,1	199,5	–	214	1,1
	NNC4936V	2	–	34,5	204,9	224,1	–	204,5	224,5	–	2
	NNCL4936V	2	4	34,5	204,9	–	230,5	205	–	230,5	2
	–	2,1	8	68	212,2	249,4	260,2	212	249,5	260	2,1
190	NNC4838V	1,5	–	25	207,6	220,7	–	207,5	221	–	1,5
	NNCL4838V	1,5	4	25	207,6	–	225	208	–	225	1,5
	NNC4938V	2	–	34,5	215	234,3	–	215	234,5	–	2
	NNCL4938V	2	4	34,5	215	–	240,7	215	–	240,5	2
	–	2,1	8,2	68	221,8	259	269,8	221,5	259	269,5	2,1

Double row full complement cylindrical roller bearings

Semi-locating, locating and non-locating bearings

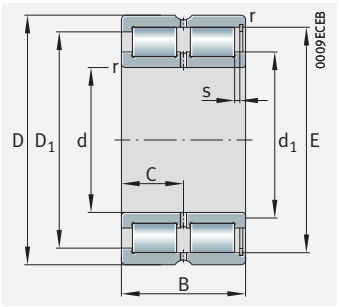

SL1850
Semi-locating bearing

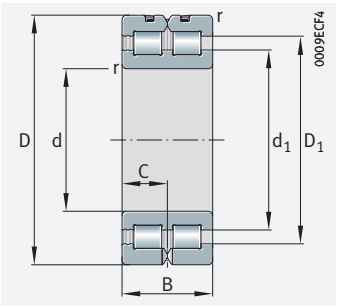

SL0148, SL0149
Locating bearings

d = 200 – 300 mm

Main dimensions			Basic load ratings		Fatigue limit load	Limiting speed	Speed rating	Mass	Designation ➤*539*|*4.12* ➤*540*|*4.13*		
d	D	B	dyn. C_r N	stat. C_{0r} N	C_{ur} N	n_G min^{-1}	$n_{\vartheta r}$ min^{-1}	m ≈ kg	Semi-locating bearing	Locating bearing	Non-locating bearing
200	250	50	320 000	770 000	86 000	1 410	960	5,9	–	**SL014840**	–
	250	50	320 000	770 000	86 000	1 410	960	5,7	–	–	**SL024840**
	280	80	680 000	1 440 000	176 000	1 310	820	15,8	–	**SL014940**	–
	280	80	680 000	1 440 000	176 000	1 310	820	15,3	–	–	**SL024940**
	310	150	1 630 000	3 000 000	375 000	1 230	710	40,4	**SL185040-TB**	–	–
220	270	50	335 000	840 000	92 000	1 290	850	6,4	–	**SL014844**	–
	270	50	335 000	840 000	92 000	1 290	850	6,2	–	–	**SL024844**
	300	80	700 000	1 550 000	185 000	1 220	750	17,2	–	**SL014944**	–
	300	80	700 000	1 550 000	185 000	1 220	750	16,7	–	–	**SL024944**
	340	160	1 980 000	3 650 000	440 000	1 140	630	51,6	**SL185044-TB**	–	–
240	300	60	510 000	1 260 000	145 000	1 170	730	10	–	**SL014848**	–
	300	60	510 000	1 260 000	145 000	1 170	730	9,9	–	–	**SL024848**
	320	80	740 000	1 700 000	198 000	1 110	660	18,5	–	**SL014948**	–
	320	80	740 000	1 700 000	198 000	1 110	660	17,9	–	–	**SL024948**
	360	160	2 080 000	4 000 000	470 000	1 040	550	55,2	**SL185048-TB**	–	–
260	320	60	540 000	1 370 000	154 000	1 080	650	11	–	**SL014852**	–
	320	60	540 000	1 370 000	154 000	1 080	650	10,6	–	–	**SL024852**
	360	100	1 100 000	2 470 000	285 000	1 010	570	32	–	**SL014952**	–
	360	100	1 100 000	2 470 000	285 000	1 010	570	31,2	–	–	**SL024952**
	400	190	2 750 000	5 000 000	580 000	940	490	82,6	**SL185052-TB**	–	–
280	350	69	700 000	1 820 000	201 000	980	570	16	–	**SL014856**	–
	350	69	700 000	1 820 000	201 000	980	570	15,6	–	–	**SL024856**
	380	100	1 150 000	2 650 000	300 000	940	520	34	–	**SL014956**	–
	380	100	1 150 000	2 650 000	300 000	940	520	33,1	–	–	**SL024956**
	420	190	2 850 000	5 300 000	600 000	900	460	88	**SL185056-TB**	–	–
300	380	80	820 000	2 070 000	228 000	920	550	23	–	**SL014860**	–
	380	80	820 000	2 070 000	228 000	920	550	22	–	–	**SL024860**
	420	118	1 630 000	3 700 000	410 000	870	445	53	–	**SL014960**	–
	420	118	1 630 000	3 700 000	410 000	870	445	51,9	–	–	**SL024960**
	460	218	3 450 000	6 600 000	670 000	800	395	124	**SL185060-TB**	–	–

medias *https://www.schaeffler.de/std/1F9A*

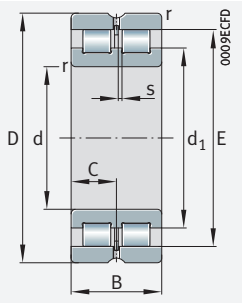

SL0248, SL0249
Non-locating bearings

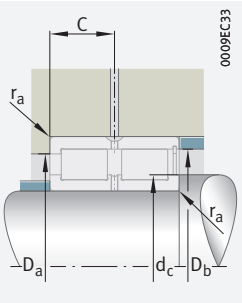

Mounting dimensions
for semi-locating bearings

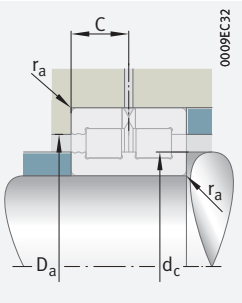

Mounting dimensions
for locating bearings

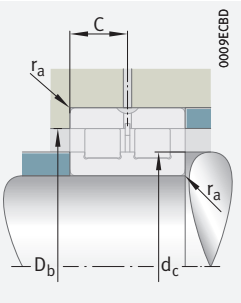

Mounting dimensions
for non-locating bearings

d	Designation to DIN 5412	Dimensions						Mounting dimensions			
		r min.	s	C	d_1 ≈	D_1 ≈	E	d_c	D_a	D_b	r_a max.
200	NNC4840V	1,5	–	25	218,1	231,2	–	218	231,5	–	1,5
	NNCL4840V	1,5	4	25	218,1	–	235,5	218,5	–	235,5	1,5
	NNC4940V	2,1	–	40	230,5	252,3	–	230,5	252,5	–	2,1
	NNCL4940V	2,1	5	40	230,5	–	259,34	230,5	–	259	2,1
	–	2,1	8,9	75	236,6	276,2	287,8	236,5	276,5	287,5	2,1
220	NNC4844V	1,5	–	25	239,1	252,3	–	239	252,5	–	1,5
	NNCL4844V	1,5	4	25	239,1	–	256,5	239,5	–	256,5	1,5
	NNC4944V	2,1	–	40	248	268,5	–	248	268,5	–	2,1
	NNCL4944V	2,1	5	40	248	–	276,52	248	–	276,5	2,1
	–	3	9	80	254,6	297,8	312,2	254,5	298	312	3
240	NNC4848V	2	–	30	259,5	276,7	–	259,5	277	–	2
	NNCL4848V	2	4	30	259,5	–	281,9	259,5	–	281,5	2
	NNC4948V	2,1	–	40	270,6	292,3	–	270,5	292,5	–	2,1
	NNCL4948V	2,1	5	40	270,6	–	299,46	271	–	299	2,1
	–	3	9	80	277,5	322,1	335,1	277,5	322,5	335	3
260	NNC4852V	2	–	30	281,8	298,8	–	281,5	299	–	2
	NNCL4852V	2	4	30	281,8	–	304,2	282	–	304	2
	NNC4952V	2,1	–	50	294,5	322,1	–	294,5	322,5	–	2,1
	NNCL4952V	2,1	6	50	294,5	–	331,33	294,5	–	331	2,1
	–	4	11,3	95	304	359,7	376	304	360	375,5	4
280	NNC4856V	2	–	34,5	306,8	326,4	–	306,5	326,5	–	2
	NNCL4856V	2	4	34,5	306,8	–	332,4	307	–	332	2
	NNC4956V	2,1	–	50	316,5	344,6	–	316,5	345	–	2,1
	NNCL4956V	2,1	6	50	316,5	–	353,34	316,5	–	353	2,1
	–	4	11,3	95	318,3	374,1	390,3	318	374,5	390	4
300	NNC4860V	2,1	–	40	327,9	349,9	–	327,5	350	–	2,1
	NNCL4860V	2,1	6	40	327,9	–	356,7	328	–	356,5	2,1
	NNC4960V	3	–	59	340,7	374,3	–	340,5	374,5	–	3
	NNCL4960V	3	6	59	340,7	–	385,51	341	–	385,5	3
	–	4	12,5	109	353,6	413,6	433,6	353,5	414	433,5	4

Double row full complement cylindrical roller bearings

Semi-locating, locating and non-locating bearings

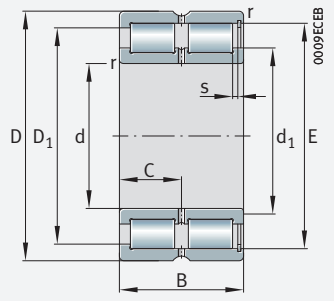

SL1850
Semi-locating bearing

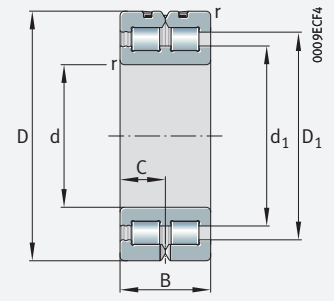

SL0148, SL0149
Locating bearings

d = 320 – 400 mm

Main dimensions			Basic load ratings		Fatigue limit load	Limiting speed	Speed rating	Mass	Designation ➤539|4.12 ➤540|4.13		
d	D	B	dyn. C_r	stat. C_{0r}	C_{ur}	n_G	$n_{\vartheta r}$	m	Semi-locating bearing	Locating bearing	Non-locating bearing
			N	N	N	min^{-1}	min^{-1}	≈ kg			
320	400	80	850 000	2 220 000	240 000	860	495	24	–	**SL014864**	–
	400	80	850 000	2 220 000	240 000	860	495	23,5	–	–	**SL024864**
	440	118	1 700 000	4 050 000	435 000	800	395	56	–	**SL014964**	–
	440	118	1 700 000	4 050 000	435 000	800	395	54,9	–	–	**SL024964**
	480	218	3 550 000	6 900 000	700 000	770	375	128,4	**SL185064-TB**	–	–
340	420	80	870 000	2 330 000	249 000	810	465	25,5	–	**SL014868**	–
	420	80	870 000	2 330 000	249 000	810	465	25	–	–	**SL024868**
	460	118	1 750 000	4 250 000	450 000	770	375	59	–	**SL014968**	–
	460	118	1 750 000	4 250 000	450 000	770	375	57,8	–	–	**SL024968**
	520	243	4 250 000	8 300 000	810 000	710	335	178	**SL185068-TB**	–	–
360	440	80	900 000	2 480 000	260 000	770	430	27	–	**SL014872**	–
	440	80	900 000	2 480 000	260 000	770	430	26	–	–	**SL024872**
	480	118	1 790 000	4 450 000	465 000	730	350	62,1	–	**SL014972**	–
	480	118	2 020 000	4 450 000	570 000	730	350	60,8	–	–	**SL024972**
	540	243	4 400 000	8 700 000	840 000	680	320	178	**SL185072-TB**	–	–
380	480	100	1 320 000	3 500 000	365 000	710	375	45,5	–	**SL014876**	–
	480	100	1 320 000	3 500 000	365 000	710	375	44	–	–	**SL024876**
	520	140	2 250 000	5 500 000	590 000	680	325	92,4	–	**SL014976**	–
	520	140	2 250 000	5 500 000	590 000	680	325	90,5	–	–	**SL024976**
	560	243	4 450 000	8 900 000	860 000	660	305	196,5	**SL185076-TB**	–	–
400	500	100	1 350 000	3 650 000	375 000	680	360	46,5	–	**SL014880**	–
	500	100	1 350 000	3 650 000	375 000	680	360	45,8	–	–	**SL024880**
	540	140	2 310 000	5 800 000	610 000	650	300	96,5	–	**SL014980**	–
	540	140	2 310 000	5 800 000	610 000	650	300	94,6	–	–	**SL024980**

medias *https://www.schaeffler.de/std/1F9A*

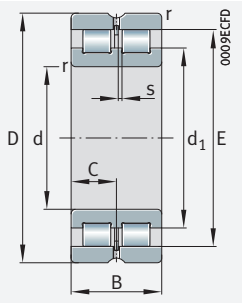

SL0248, SL0249
Non-locating bearings

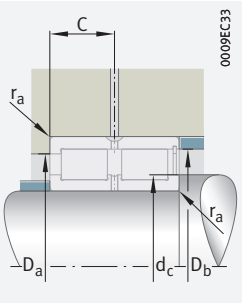

Mounting dimensions for semi-locating bearings

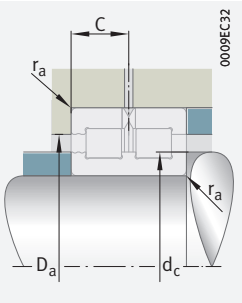

Mounting dimensions for locating bearings

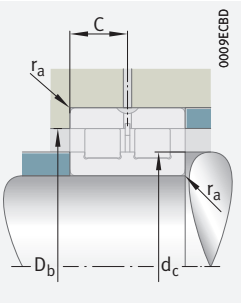

Mounting dimensions for non-locating bearings

d	Designation to DIN 5412	Dimensions						Mounting dimensions			
		r min.	s	C	d_1 ≈	D_1 ≈	E	d_c	D_a	D_b	r_a max.
320	NNC4864V	2,1	–	40	350,9	372,9	–	350,5	373	–	2,1
	NNCL4864V	2,1	6	40	350,9	–	379,7	351	–	379,5	2,1
	NNC4964V	3	–	59	367,5	401,1	–	367,5	401,5	–	3
	NNCL4964V	3	6	59	367,5	–	412,27	367,5	–	412	3
	–	4	12,5	109	369,5	431,5	449,5	369,5	431,5	449,5	4
340	NNC4868V	2,1	–	40	368,1	390,1	–	368	390,5	–	2,1
	NNCL4868V	2,1	6	40	368,1	–	396,9	368,5	–	396,5	2,1
	NNC4968V	3	–	59	385,3	418,9	–	385	419	–	3
	NNCL4968V	3	6	59	385,3	–	430,11	385,5	–	430	3
	–	5	14,3	121,5	396	465,5	485,7	396	465,5	485,5	5
360	NNC4872V	2,1	–	40	391	413,2	–	391	413,5	–	2,1
	NNCL4872V	2,1	6	40	391	–	419,8	391	–	419,5	2,1
	NNC4972V	3	–	59	404	436,8	–	404	437	–	3
	NNCL4972V	3	6	59	404	–	447,95	404	–	447,5	3
	–	5	14	121,5	413,8	481	503,5	413,5	481	503	5
380	NNC4876V	2,1	–	50	419	447,2	–	419	447,5	–	2,1
	NNCL4876V	2,1	6	50	419	–	455,8	419	–	455,5	2,1
	NNC4976V	4	–	70	430,2	468,7	–	430	469	–	4
	NNCL4976V	4	7	70	430,2	–	481,35	430,5	–	481	4
	–	5	14,1	121,5	432	499	521,3	432	499	521	5
400	NNC4880V	2,1	–	50	433,8	462	–	433,5	462	–	2,1
	NNCL4880V	2,1	6	50	433,8	–	470,59	434	–	470,5	2,1
	NNC4980V	4	–	70	450,5	489	–	450,5	489	–	4
	NNCL4980V	4	7	70	450,5	–	501,74	450,5	–	501,5	4

Double row full complement cylindrical roller bearings

With annular slots
Locating bearings

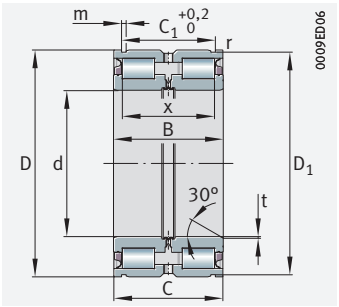

SL0450..-PP
SL04..-PP

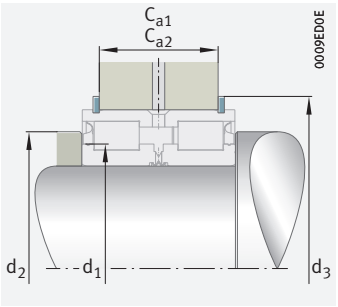

Mounting dimensions

d = 20 – 160 mm

Main dimensions			Basic load ratings		Fatigue limit load	Limiting speed	Mass	Designation
d	D	B	dyn. C_r	stat. C_{0r}	C_{ur}	n_G grease	m	➤*539|4.12* ➤*540|4.13*
			N	N	N	min^{-1}	≈ kg	
20	42	30	41 500	51 000	7 000	5 500	0,2	**SL045004-D-PP**
25	47	30	46 000	60 000	8 300	4 700	0,24	**SL045005-D-PP**
30	55	34	50 000	67 000	9 700	4 100	0,37	**SL045006-D-PP**
35	62	36	63 000	88 000	12 600	3 550	0,48	**SL045007-D-PP**
40	68	38	80 000	111 000	16 300	3 150	0,56	**SL045008-D-PP**
45	75	40	97 000	139 000	20 200	2 800	0,7	**SL045009-D-PP**
50	80	40	102 000	151 000	22 100	2 600	0,76	**SL045010-D-PP**
55	90	46	120 000	186 000	25 500	2 340	1,18	**SL045011-D-PP**
60	95	46	125 000	201 000	28 000	2 180	1,26	**SL045012-D-PP**
65	100	46	130 000	215 000	30 000	2 040	1,33	**SL045013-D-PP**
70	110	54	175 000	275 000	37 000	1 850	1,87	**SL045014-D-PP**
75	115	54	201 000	315 000	42 500	1 740	1,96	**SL045015-D-PP**
80	125	60	210 000	340 000	46 000	1 620	2,71	**SL045016-D-PP**
85	130	60	219 000	365 000	48 500	1 510	2,83	**SL045017-D-PP**
90	140	67	305 000	510 000	70 000	1 410	3,71	**SL045018-D-PP**
95	145	67	315 000	530 000	72 000	1 360	3,88	**SL045019-D-PP**
100	150	67	330 000	550 000	79 000	1 300	3,95	**SL045020-D-PP**
110	170	80	395 000	680 000	96 000	1 170	6,57	**SL045022-D-PP**
120	180	80	410 000	740 000	101 000	1 090	7,04	**SL045024-D-PP**
130	200	95	540 000	960 000	130 000	960	10,5	**SL045026-D-PP**
	190	80	430 000	790 000	106 000	1 020	7,5	**SL04130-D-PP**
140	210	95	610 000	1 100 000	148 000	910	11,1	**SL045028-D-PP**
	200	80	445 000	840 000	112 000	960	8	**SL04140-D-PP**
150	225	100	710 000	1 260 000	166 000	850	13,3	**SL045030-D-PP**
	210	80	465 000	920 000	119 000	880	8,4	**SL04150-D-PP**
160	240	109	740 000	1 360 000	176 000	790	16,6	**SL045032-D-PP**
	220	80	480 000	970 000	124 000	830	8,8	**SL04160-D-PP**

medias *https://www.schaeffler.de/std/1F9A*

[1] For snap rings WRE.

[2] For retaining ring to DIN 471.

Dimensions								Mounting dimensions					Snap ring WRE	Retaining ring to DIN 471
d	C	C_1 +0,2	D_1	m	r min.	t	x	C_{a1} [1] −0,2	C_{a2} [2] −0,2	d_1	d_2	d_3 [1]		
20	29	24,7	40,2	1,8	0,3	0,5	22,5	21,5	21	31	34	47	WRE42	42×1,75
25	29	24,7	45,2	1,8	0,3	0,5	22,5	21,5	21	35,5	39	52	WRE47	47×1,75
30	33	28,2	53	2,1	0,3	0,5	25,5	25	24	41	44	60	WRE55	55×2
35	35	30,2	60	2,1	0,3	0,5	27,5	27	26	46,5	50	67	WRE62	62×2
40	37	32,2	65,8	2,7	0,6	0,8	28,5	28	27	51,5	55	75	WRE68	68×2,5
45	39	34,2	72,8	2,7	0,6	0,8	30,5	30	29	57	61	82	WRE75	75×2,5
50	39	34,2	77,8	2,7	0,6	0,8	30,5	30	29	62	66	87	WRE80	80×2,5
55	45	40,2	87,4	3,2	0,6	1	36	35	34	69	73	99	WRE90	90×3
60	45	40,2	92,4	3,2	0,6	1	36	35	34	74	79	104	WRE95	95×3
65	45	40,2	97,4	3,2	0,6	1	36	35	34	79	84	109	WRE100	100×3
70	53	48,2	107,1	4,2	0,6	1	42	43	40	84,5	91	119	WRE110	110×4
75	53	48,2	112,1	4,2	0,6	1	42	43	40	90	97	124	WRE115	115×4
80	59	54,2	122,1	4,2	0,6	1,5	48	49	46	97,5	105	137	WRE125	125×4
85	59	54,2	127,1	4,2	0,6	1,5	48	49	46	104	112	142	WRE130	130×4
90	66	59,2	137	4,2	0,6	1,5	54	54	51	109,5	118	152	WRE140	140×4
95	66	59,2	142	4,2	0,6	1,5	54	54	51	113,5	122	157	WRE145	145×4
100	66	59,2	147	4,2	0,6	1,5	54	54	51	117,5	128	162	WRE150	150×4
110	79	70,2	167	4,2	0,6	1,8	64	65	62	132	143	182	WRE170	170×4
120	79	71,2	176	4,2	0,6	1,8	64	65	63	141	153	196	WRE180	180×4
130	94	83,2	196	4,2	0,6	1,8	77	77	75	157	170	216	WRE200	200×4
	79	71,2	186	4,2	0,6	1,8	64	65	63	151	160	206	WRE190	190×4
140	94	83,2	206	5,2	0,6	1,8	77	77	73	165,5	181	226	WRE210	210×5
	79	71,2	196	4,2	0,6	1,8	64	65	63	160	170	216	WRE200	200×4
150	99	87,2	221	5,2	0,6	2	80	81	77	176	192	245	WRE225	225×5
	79	71,2	206	5,2	0,6	1,8	64	65	61	174,5	185	226	WRE210	210×5
160	108	95,2	236	5,2	0,6	2	89	89	85	189	207	260	WRE240	240×5
	79	71,2	216	5,2	0,6	1,8	64	65	61	184,5	196	236	WRE220	220×5

Double row full complement cylindrical roller bearings

With annular slots
Locating bearings

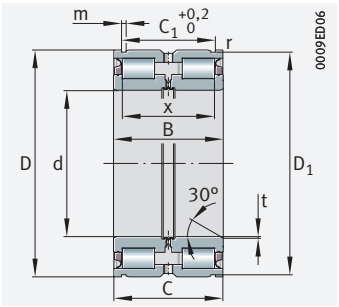

SL0450..-PP
SL04..-PP

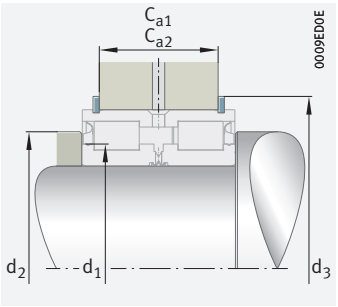

Mounting dimensions

d = 170 – 300 mm

Main dimensions			Basic load ratings		Fatigue limit load	Limiting speed	Mass	Designation
d	D	B	dyn. C_r	stat. C_{0r}	C_{ur}	n_G grease	m	➤*539*|*4.12* ➤*540*|*4.13*
			N	N	N	min^{-1}	≈ kg	
170	260	122	960 000	1 750 000	224 000	740	22,6	**SL045034-D-PP**
	230	80	490 000	1 030 000	129 000	790	9,3	**SL04170-D-PP**
180	280	136	1 140 000	2 130 000	270 000	680	30,1	**SL045036-D-PP**
	240	80	500 000	1 080 000	134 000	750	9,8	**SL04180-D-PP**
190	290	136	1 160 000	2 210 000	275 000	660	31,5	**SL045038-D-PP**
	260	80	520 000	1 160 000	141 000	700	12,7	**SL04190-D-PP**
200	310	150	1 350 000	2 600 000	315 000	610	40,8	**SL045040-D-PP**
	270	80	540 000	1 210 000	146 000	670	13,2	**SL04200-D-PP**
220	340	160	1 570 000	3 050 000	370 000	560	52,5	**SL045044-D-PP**
	300	95	700 000	1 550 000	185 000	610	19,5	**SL04220-D-PP**
240	360	160	1 630 000	3 300 000	390 000	530	56	**SL045048-D-PP**
	320	95	740 000	1 700 000	198 000	560	21	**SL04240-D-PP**
260	400	190	2 380 000	4 700 000	540 000	475	84,5	**SL045052-D-PP**
	340	95	840 000	1 990 000	229 000	520	22,5	**SL04260-D-PP**
280	420	190	2 600 000	5 200 000	590 000	450	90	**SL045056-D-PP**
	360	95	870 000	2 120 000	239 000	485	24	**SL04280-D-PP**
300	460	218	3 000 000	5 800 000	650 000	415	126	**SL045060-D-PP**
	380	95	900 000	2 250 000	249 000	455	25,5	**SL04300-D-PP**

medias *https://www.schaeffler.de/std/1F9A*

[1] For snap rings WRE.

[2] For retaining ring to DIN 471.

Dimensions								Mounting dimensions					Snap ring WRE	Retaining ring to DIN 471
d	C	C_1 +0,2	D_1	m	r min.	t	x	C_{a1} [1] −0,2	C_{a2} [2] −0,2	d_1	d_2	d_3 [1]		
170	121	107,2	254	5,2	0,6	2	100	99	97	201	220	282	WRE260	260×5
	79	71,2	226	5,2	0,6	1,8	64	65	61	194	206	250	WRE230	230×5
180	135	118,2	274	5,2	0,6	2	112	110	108	218	239	302	WRE280	280×5
	79	71,2	236	5,2	0,6	1,8	64	65	61	203,5	216	260	WRE240	240×5
190	135	118,2	284	5,2	0,6	2	112	110	108	226	248	312	WRE290	290×5
	79	73,2	254	5,2	0,6	1,8	64	65	63	218	231	282	WRE260	260×5
200	149	128,2	304	6,3	0,6	2	126	120	116	243,5	267	336	WRE310	310×6
	79	73,2	264	5,2	0,6	1,8	64	65	63	227,5	241	292	WRE270	270×5
220	159	138,2	334	6,3	1	2	132	130	126	260	286	366	WRE340	340×6
	94	83,2	294	5,2	1	2	72	75	73	249	264	322	WRE300	300×5
240	159	138,2	354	6,3	1	2	132	130	126	279,5	305	386	WRE360	360×6
	94	83,2	314	6,3	1	2	72	75	71	272	287	346	WRE320	320×6
260	189	162,2	394	6,3	1,1	3	150	154	150	305	336	426	WRE400	400×6
	94	83,2	334	6,3	1	3	75	75	71	293	310	366	WRE340	340×6
280	189	163,2	413	7,3	1,1	3	150	154	149	321	354	453	WRE420	420×7
	94	83,2	354	6,3	1	3	75	75	71	310,5	386	327	WRE360	360×6
300	216	185,2	453	7,3	1,1	3	170	176	171	347	375	493	WRE460	460×7
	94	83,2	374	6,3	1	3	75	75	71	328	346	406	WRE380	380×6

Tapered roller bearings



Matrix for bearing preselection ____ 563

1 Tapered roller bearings ____ 564

1.1 Bearing design ____ 564
1.2 Load carrying capacity ____ 570
1.3 Compensation of angular misalignments ____ 570
1.4 Lubrication ____ 571
1.5 Sealing ____ 572
1.6 Speeds ____ 572
1.7 Noise ____ 572

FAG

1.8 Temperature range *574*
1.9 Cages *574*
1.10 Internal clearance *574*
1.11 Dimensions, tolerances *575*
1.12 Suffixes *580*
1.13 Structure of bearing designation *581*
1.14 Dimensioning *583*
1.15 Minimum load *589*
1.16 Design of bearing arrangements *590*
1.17 Mounting and dismounting *593*
1.18 Legal notice regarding data freshness *594*
1.19 Further information *594*

Product tables *596*

Tapered roller bearings, single row to DIN/ISO *596*
Tapered roller bearings, single row to ANSI/ABMA *624*
Tapered roller bearings, matched pairs *644*
Integral tapered roller bearings *648*

Matrix for bearing preselection

The matrix gives an overview of the types and design features.

It can be used to make a preliminary assessment of whether a bearing is fundamentally suitable for the envisaged application.

The additional information provided in the product chapter (see column "detailed information") and in the Technical principles must, however, be observed in addition to this overview in selection of the bearing.

Design features and suitability			Tapered roller bearings			
+++ extremely suitable ++ highly suitable + suitable (+) suitable with restrictions – not suitable/not applicable ✓ available			single row	matched pairs	integral tapered roller bearings, fitted in pairs	detailed information ➤ 564
Load carrying capacity	radial		+++	+++	+++	➤ 570 | 1.2
	axial, one direction		+++	+++	+++	➤ 570 | 1.2
	axial, both directions		–	+++	+++	➤ 570 | 1.2
	moments		(+)	(+)	(+)	➤ 570 | 1.2
Compensation of angular misalignments	static		(+)	(+)	(+)	➤ 570 | 1.3
	dynamic		(+)	(+)	(+)	➤ 570 | 1.3
Bearing design	cylindrical bore		✓	✓	✓	➤ 564 | 1.1
	tapered bore		–	–	–	➤ 564 | 1.1
	separable		✓	✓	–	➤ 593 | 1.17
Lubrication	greased		–	–	✓	➤ 571 | 1.4
Sealing	open		✓	✓	–	➤ 572 | 1.5
	non-contact		–	–	–	➤ 572 | 1.5
	contact		–	–	✓	➤ 572 | 1.5
Operating temperature in °C	from to		–30 +120[1]	–30 +120[1]	–30 +110	➤ 574 | 1.8
Suitability for	high speeds		+[2]	(+)	(+)	➤ 572 | 1.6 ➤ 64
	high running accuracy		++	++	++	➤ 575 | 1.11 ➤ 115
	low-noise running		(+)	(+)	(+)	➤ 572 | 1.7 ➤ 27
	high rigidity		+++[3]	+++	+++	➤ 54
	reduced friction		+	+	+	➤ 56
	length compensation within bearing		–	–	–	
	non-locating bearing arrangement		(+)[3]	(+)	(+)	➤ 141
	locating bearing arrangement		+++	+++	+++	➤ 141
X-life bearings			✓	✓	–	➤ 565
Bearing bore d in mm	from to		15 360[4][5]	40 260[4]	30 80	➤ 596
Product tables	from page ➤		596	644	648	

1) Where D > 220 mm: +200 °C
2) Reduced suitability when mounted in pairs
3) For mounting in pairs
4) Larger catalogue bearings GL 1
5) Bearings to ANSI/ABMA up to d = 673,1 mm

1 Tapered roller bearings

Tapered roller bearings are particularly suitable where:

- high radial loads occur ➤*564|1.1* and ➤*570|1.2*
- high axial loads act on one side ➤*570|1.2*
- combined loads must be supported (radial and axial forces acting simultaneously) ➤*570|1.2*
- precise axial guidance of the shaft is required (locating bearing function)
- the bearing arrangement must have very high axial rigidity
- the bearing position is operated clearance-free or under preload (single bearings are adjusted against each other) ➤*590|1.16*
- high running accuracy is required
- the load carrying capacity of angular contact ball bearings is no longer sufficient and the higher speed suitability of angular contact ball bearings is not required ➤*564|1*
- the bearings are not required to compensate misalignments
- the design objective comprises compact, rigid and economical bearing arrangements with a high load carrying capacity

For an overview of other product-specific features, see the Matrix for bearing preselection ➤*563*.

1
Load carrying capacity and speed comparison – single row tapered roller bearings/single row angular contact ball bearings

F_r = *radial load*
C_r = *basic dynamic load rating*
n_G = *limiting speed*

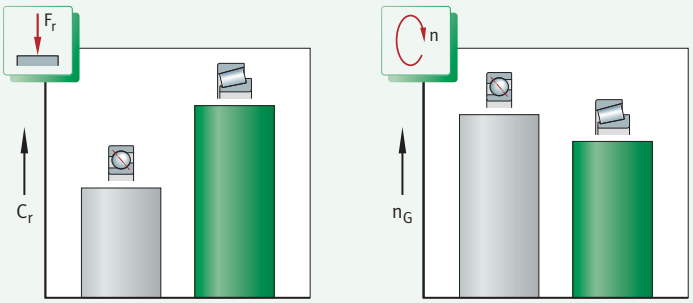

1.1 Bearing design

✎ *Design variants*

Tapered roller bearings are available in an extensive range of single row and multi-row designs. X-life is the new performance standard for tapered roller bearings and stands for eXtended life ➤*565*. The key designs based on single row tapered roller bearings are:

- single row tapered roller bearings
- matched tapered roller bearings
- integral tapered roller bearings

Tapered roller bearings are also available in many other designs and sizes, as well as for specific applications, by agreement. For general availability, please contact Schaeffler. An upgrade to X-life performance is available. X-life bearings TPI 241. Matched tapered roller bearings TPI 245. Integral tapered roller bearings TPI 151.
Larger catalogue bearings and other bearing designs GL 1.

✎ *Available in metric and inch sizes*

Tapered roller bearings are produced in metric and inch sizes.

Classification and designation – bearings in metric and inch sizes

Bearings in metric sizes:

- DIN 720:2008
- ISO 355:2007
- ANSI/ABMA 19.1:2011 (prefix KJ)

Bearings in inch sizes:

- ANSI/ABMA 19.2:2013 (prefix K)

Tapered roller bearings of basic design

Fundamental design features

Tapered roller bearings are part of the group of radial roller bearings. In contrast to the ball, the roller has a larger contact area perpendicular to the roller axis. As a result, it can transmit higher forces, has greater rigidity and allows smaller rolling element diameters under the same load.
The bearings comprise a ribless outer ring, an inner ring with two ribs of different heights and a cage ➤565|2, ➤567|5. The cage contains truncated conical rollers. The roller and cage assembly together with the inner ring forms a unit. The low rib retains, in conjunction with the cage, the rollers on the inner ring raceway; the high rib supports the axial force component arising from the tapered form of the rollers. While the tapered rollers roll on the raceways, they slide on the higher rib of the inner ring. The projected lines of contact of the tapered rollers intersect the projected raceways of the inner and outer ring at a point on the bearing axis ➤565|2. As a result of this geometrical characteristic, tapered roller bearings are highly suitable for supporting combined loads. This also prevents any kinematic forced slippage at the rolling contact.

Low running noise and vibrations

Due to the dimensional and geometrical accuracy of the tapered rollers, the rolling elements in a roller set are subjected to virtually the same proportion of load in the load range. In operation, this leads to low-noise and low-vibration running, as well as a high adjustment accuracy.

2
Single row tapered roller bearing: the apex points of the tapered surfaces meet at a point on the bearing axis

F_r = *radial load*
F_a = *axial load*
R = *roller cone apex*
α = *nominal contact angle*

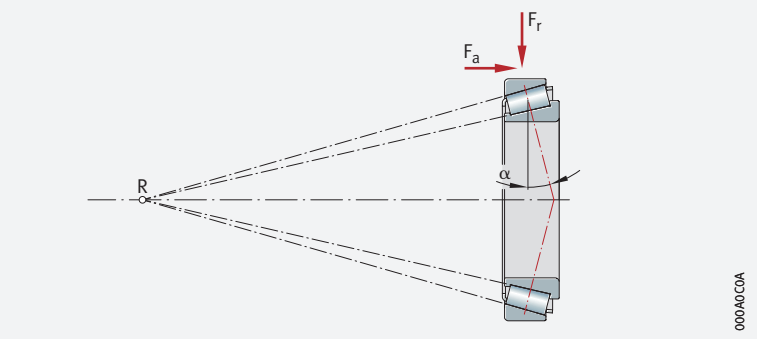

X-life premium quality

Single row tapered roller bearings are available in numerous series and dimensions as X-life bearings. These bearings exhibit considerably higher performance than comparable tapered roller bearings without X-life characteristics ➤566|3. This is achieved, in part, by superior ring materials and optimised contact geometry between roller and raceway, as well as between roller and rib. In combination with an increased surface quality, this leads to improved lubricant film formation.

Advantages

Increased customer benefits due to X-life

These technical enhancements offer a range of advantages, such as:

- up to 20 % higher basic dynamic load ratings C_r ➤*566*|*3*
- a higher running accuracy and smooth running
- running with reduced friction and greater energy efficiency (reduction in friction up to 50 %, in the case of tapered roller bearings with a steep taper, up to 75 %)
- lower heat generation in the bearing
- higher limiting speeds
- lower lubricant consumption and therefore longer maintenance intervals if relubrication is carried out
- a measurably longer operating life of the bearings ➤*566*|*4*
- high reliability and operational security
- lower overall operating costs
- compact, environmentally-friendly bearing arrangements

Lower operating costs, higher machine availability

In conclusion, these advantages improve the overall cost-efficiency of the bearing position significantly and thus bring about a sustainable increase in the efficiency of the machine and equipment.

Suffix XL

X-life tapered roller bearings include the suffix XL in the designation ➤*580*|*1.12*.

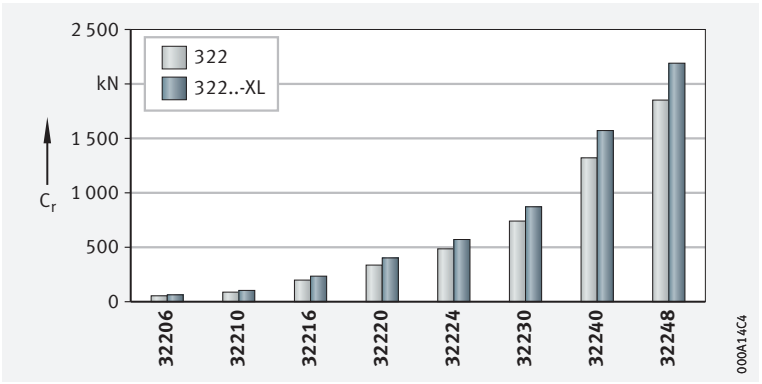

3
Comparison of basic dynamic load rating C_r of X-life tapered roller bearings with bearings without X-life performance

C_r = *basic dynamic load rating*

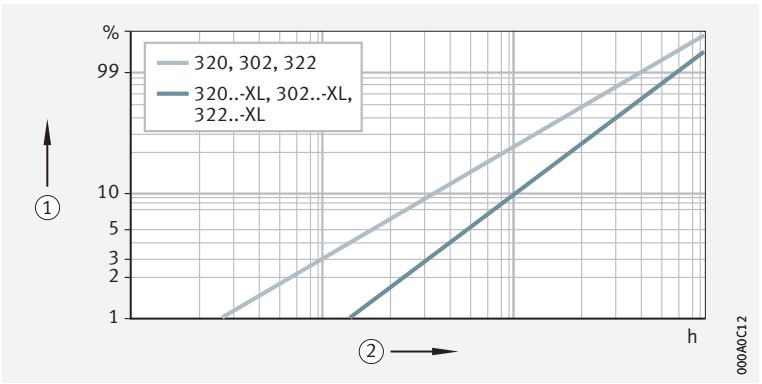

4
Fatigue running time in Weibull diagram – comparison of X-life tapered roller bearings with bearings without X-life performance

① *Probability of failure*
② *Running time in hours*

Areas of application

Due to their special technical features, X-life tapered roller bearings are highly suitable for bearing arrangements in:

- mobile hydraulics (axial piston and orbital motors)
- tractors (wheel bearings and gearboxes)
- vertical mills (grinding rolls)
- hot and cold rolling mills (work rolls in roll stands)
- applications for oil and gas extraction
- offshore and onshore wind turbines (gearboxes)
- construction machinery (road rollers, drill head bearings)

X-life indicates a high product performance density and thus a particularly significant benefit to the customer. Further information on X-life ➤ *10* and TPI 241.

Single row tapered roller bearings

✎ Optimised product characteristics give a sustainable improvement in operating behaviour

Tapered roller bearings are individual, single row bearings of open design which, for technical reasons, are always adjusted against a second tapered roller bearing in a mirror image arrangement ➤ *567* | *5*.
The bearings are designed such that they reliably cover the extensive demands in relation to generally common requirements.
For example, in order to improve the lubricant film formation and running characteristics, the sliding surfaces on the guidance rib of the inner ring, as well as the end faces and contact profile of the rollers, have been optimised ➤ *565*. In addition, the high production accuracy allows the bearings to be adjusted against each other with high functional security. This in turn leads to improved operating characteristics and thus to a higher operational reliability. Tapered roller bearings are not self-retaining. As a result, the inner ring with the roller and cage assembly can be mounted separately from the outer ring. This gives simplified mounting of the bearings.

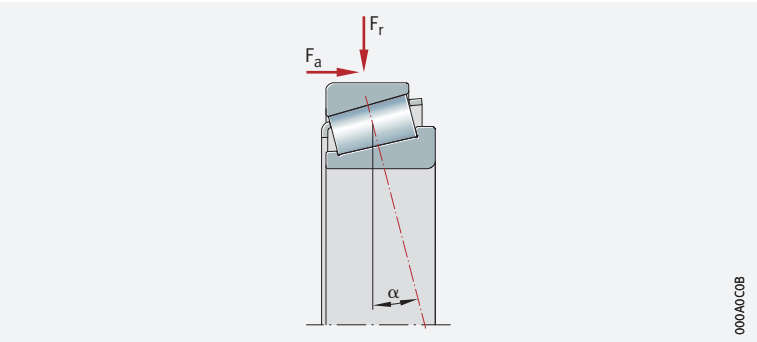

5
Single row tapered roller bearing

F_r = *radial load*
F_a = *axial load*
α = *nominal contact angle*

Matched tapered roller bearings

If the load carrying capacity of a bearing is not sufficient or the shaft is to be guided in both directions with a specific axial clearance, then ready-to-fit, matched bearing sets are available. Matched tapered roller bearings are essentially available in three arrangements comprising an X, O and tandem arrangement.

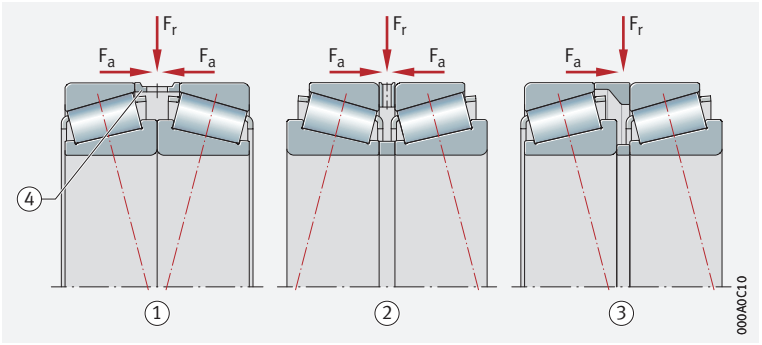

6
Matched tapered rolling bearing pairs in tandem, X and O arrangement, load directions, contact lines

F_r = *radial load*
F_a = *axial load*

① *X arrangement*
② *O arrangement*
③ *Tandem arrangement*
④ *Fit ring*

X arrangement

For bearing sets in an X arrangement, the contact lines converge relative to the bearing axis ➤*568*| 6. Axial forces occur from both directions, but are always only supported by one bearing. The X arrangement is of simple design and the most frequently used arrangement of matched tapered roller bearings fitted in pairs.

O arrangement

For bearing sets in an O arrangement, the contact lines diverge relative to the bearing axis ➤*568*| 6. Axial forces occur from both directions, but are always only supported by one bearing. The support base is at its largest in the O arrangement, which is beneficial if the component with small bearing spacing must be guided with the smallest possible tilting clearance, or tilting forces must be supported. Bearing arrangements in an O arrangement are relatively rigid and can also support loads resulting from tilting moments.

Tandem arrangement

For bearing sets in a tandem arrangement, the contact lines run parallel to each other. In contrast to an X and O arrangement, the tandem arrangement can only support axial force in one direction. This bearing pair is usually adjusted against another tapered roller bearing, which supports axial forces in the opposite direction.

The product tables ➤*644*| contain only a few examples of matched tapered roller bearing sets in an X arrangement for reference purposes. Other matched tapered roller bearing sets are available in an X arrangement by agreement. Further information on “Matched tapered roller bearings” TPI 245.

Advantages of matched bearing sets

Matched bearing pairs in an O or X arrangement provide an economical solution to various bearing arrangement problems due, for example, to:

- their ability to support high radial loads as well as axial loads in both directions
- the simplified mounting of bearings, as the insertion of fit rings is no longer required and mounting defects are thus avoided
- the precise axial guidance of the shaft; the axial clearance of the bearing pair is already defined in bearing production
- simple lubrication; the lubricant can be easily fed to the rolling system by means of lubrication holes in the fit ring

Ordering and designation system

In order to simplify the ordering process, the ordering designation has been modified for matched tapered roller bearings fitted in pairs:

- The first module letter D = 2 (duplex) represents the number of bearings
- The second module letter represents the bearing arrangement:
  - B = O arrangement – Back to Back
  - F = X arrangement – Face to Face
  - T = tandem arrangement
- Where necessary (special design), a third module letter is added as a continuous counter for describing a variant. Example: A, B, ... = different set width, variant of intermediate ring design
- The axial internal clearance is indicated explicitly in the designation. For example, A80-120 means that the axial internal clearance of the unmounted bearing pair (delivered condition) is between 80 µm and 120 µm. Ordering example ➤582| 17

The number of bearing pairs must be stated when ordering matched tapered roller bearings.

Integral tapered roller bearings (JK0S) – fitted in pairs

The bearings are predominantly fitted in pairs

Integral tapered roller bearings are ready-to-fit bearing units, which are greased, sealed on one side and predominantly mounted in pairs in an O arrangement ➤569| 7. The bearings are not separable.

There is no need to set the axial internal clearance

The precise axial internal clearance is not achieved by adjusting the bearings, but is set automatically when the recommended bearing seat tolerances are observed. As a result, there is no need to adjust the bearings against each other in the manner normally required. When integral tapered roller bearings are mounted in pairs, a slot is formed on the outer ring for the retaining ring (snap ring BR). Schaeffler integral tapered roller bearings are interchangeable with each other.

When ordering, please always state the number of single bearings and not the number of bearing pairs. The snap ring must be ordered separately, for example:

- 2 tapered roller bearings JK0S080-A ➤596|
- 1 snap ring BR125

7

Paired integral tapered roller bearing, load directions

F_r = *radial load*
F_a = *axial load*

① *Integral tapered roller bearings (JK0S), fitted in pairs in an O arrangement, sealed, clearance preset*

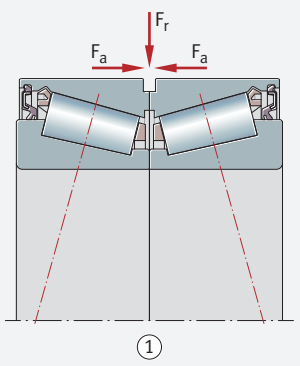

1.2 Load carrying capacity

Bearings of basic design

Capable of supporting axial loads in one direction and radial loads

Single row tapered roller bearings can support axial loads in one direction and high radial loads ➤565| 2 and ➤567| 5. However, they must always be axially adjusted against a second bearing fitted in a mirror image arrangement. This bearing combination is then fitted in an O or X arrangement.

The larger the contact angle, the higher the axial load carrying capacity

The axial load carrying capacity of the bearings is dependent on the nominal contact angle α ➤565| 2. The greater this angle, the higher the axial load to which the bearing can be subjected. The size of the contact angle – and thus the load carrying capacity of the bearing – is indicated by the value e in the product tables ➤596|. The nominal contact angle α in most bearing series is between 10° and 20°. In special series, α is approximately 28° to 30°. Bearings of series 313, 323..-B, T5ED and T7FC have a very high axial load carrying capacity due to their particularly large contact angle.

Basic load rating and fatigue limit load for bearing pairs comprising single bearings

If two bearings of the same size and design are fitted immediately adjacent to each other in an O or X arrangement, the basic dynamic load rating C_r, the basic static load rating C_{0r} and the fatigue limit load C_{ur} of the bearing pair are as follows:

- $C_r = 1{,}715 \cdot C_{r\ single\ bearing}$
- $C_{0r} = 2 \cdot C_{0r\ single\ bearing}$
- $C_{ur} = 2 \cdot C_{ur\ single\ bearing}$

Values for single bearings in the product tables ➤596|, ➤624|.

Matched bearings

Capable of supporting radial loads, axial loads in both directions and moment loads

Matched tapered roller bearings support higher radial forces than single row tapered roller bearings. In X and O arrangements, axial forces and moment loads are supported in both directions. The tandem arrangement can only support axial forces in one direction.

Basic load rating and fatigue limit load for matched bearings

For matched bearing pairs of design DF, the basic load ratings and fatigue limit loads are given in the dimension tables ➤644|.

Integral tapered roller bearings – fitted in pairs

Capable of supporting axial loads in both directions and radial loads

Single row integral tapered roller bearings fitted in pairs in an O arrangement support high axial loads in both directions and high radial loads ➤569| 7.

1.3 Compensation of angular misalignments

Compensation of angular misalignments possible

The modified line contact between the tapered rollers and the raceways ensures optimum stress distribution at the contact points and prevents stress increases at the edges. As a result, the bearings can tolerate certain angular misalignments and give better support of moment loads ➤571| 8.

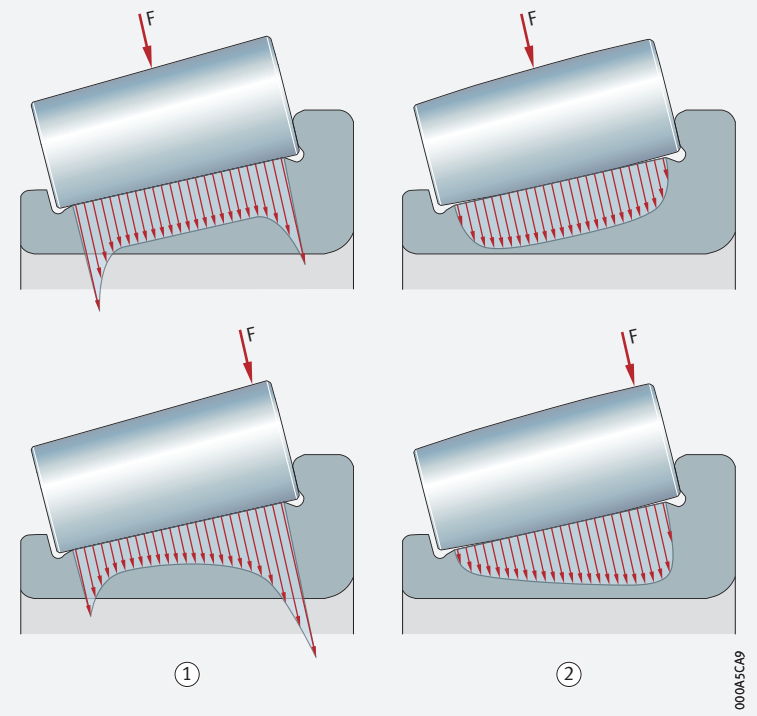

8 *Uniform load distribution due to optimised roller and raceway profile*

F = *load on the roller*
① *Straight profile*
② *Logarithmic profile*

Permissible angular misalignment

If the load ratio $P/C_{0r} \leqq 0{,}2$, the tilting of the bearing rings relative to each other must not exceed 4 angular minutes. This is, however, subject to the position of the shaft and housing axis remaining constant (no dynamic movements).

If larger loads/misalignments or dynamic angular defects are present, please consult Schaeffler.

1.4 Lubrication

Single row and matched tapered roller bearings

Oil or grease lubrication is possible

Single row and matched tapered roller bearings are not greased. These bearings must be lubricated with oil or grease.

Compatibility with plastic cages

When using bearings with plastic cages, compatibility between the lubricant and the cage material must be ensured if synthetic oils, lubricating greases with a synthetic oil base or lubricants containing a high proportion of EP additives are used.

Observe oil change intervals

Aged oil and additives in the oil can impair the operating life of plastics at high temperatures. As a result, stipulated oil change intervals must be strictly observed.

Integral tapered roller bearings

Usually maintenance-free due to initial greasing

Integral tapered roller bearings are supplied already greased with a quality grease to DIN 51825. The grease filling is measured such that these bearings are maintenance-free during their operating lives in most applications.

1.5 Sealing

Single row and matched tapered roller bearings

Provide seals in the adjacent construction

Single row and matched tapered roller bearings are not sealed, i.e. sealing of the bearing position must be carried out in the adjacent construction. This must reliably prevent:

- moisture and contaminants from entering the bearing
- the egress of lubricant from the bearing position

Integral tapered roller bearings

Integral tapered roller bearings are sealed on one side with a contact seal (lip seal).

1.6 Speeds

Speeds in the product tables

The product tables generally give two speeds for the bearings:

- the kinematic limiting speed n_G
- the thermal speed rating $n_{\vartheta r}$

Limiting speeds

The limiting speed n_G is the kinematically permissible speed of the bearing. Even under favourable mounting and operating conditions, this value should not be exceeded without prior consultation with Schaeffler ➤64.

Reference speeds

$n_{\vartheta r}$ is used to calculate n_ϑ

The thermal speed rating $n_{\vartheta r}$ is not an application-oriented speed limit, but is a calculated ancillary value for determining the thermally safe operating speed n_ϑ ➤64.

Bearings with contact seals

For bearings with contact seals, no reference speeds are defined in accordance with DIN ISO 15312:2004. As a result, only the limiting speed n_G is given in the product tables for these bearings.

Speeds for matched bearings fitted in pairs

Observing the thermal balance

For matched bearing pairs, the limiting speeds n_G given in the product tables are permissible if the less favourable thermal balance of the bearing pair is taken into consideration in the operating conditions.

1.7 Noise

The Schaeffler Noise Index (SGI) has been developed as a new feature for comparing the noise level of different bearing types and series. As a result, a noise evaluation of rolling bearings can now be carried out for the first time.

Schaeffler Noise Index

The SGI value is based on the maximum permissible noise level of a bearing in accordance with internal standards, which is calculated on the basis of ISO 15242. In order that different bearing types and series can be compared, the SGI value is plotted against the basic static load rating C_0.

This permits direct comparisons between bearings with the same load carrying capacity. The upper limit value is given in each of the diagrams. This means that the average noise level of the bearings is lower than illustrated in the diagram.

The Schaeffler Noise Index is an additional performance characteristic in the selection of bearings for noise-sensitive applications. The specific suitability of a bearing for an application in terms of installation space, load carrying capacity or speed limit for example, must be checked independently of this.

The Noise Index is currently available for the main series. Additional series will be updated and introduced in subsequent publications.

Further information:
■ ***medias*** *https://medias.schaeffler.com*

9
Schaeffler Noise Index for X-life tapered roller bearings

In comparison with DIN and ISO standard series
SGI = *Schaeffler Noise Index*
C_0 = *basic static load rating*

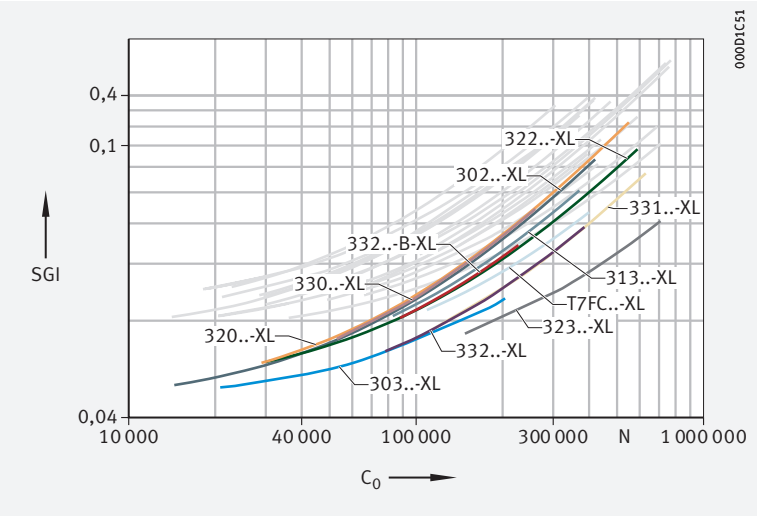

10
Schaeffler Noise Index for DIN tapered roller bearings

In comparison with X-life series
SGI = *Schaeffler Noise Index*
C_0 = *basic static load rating*

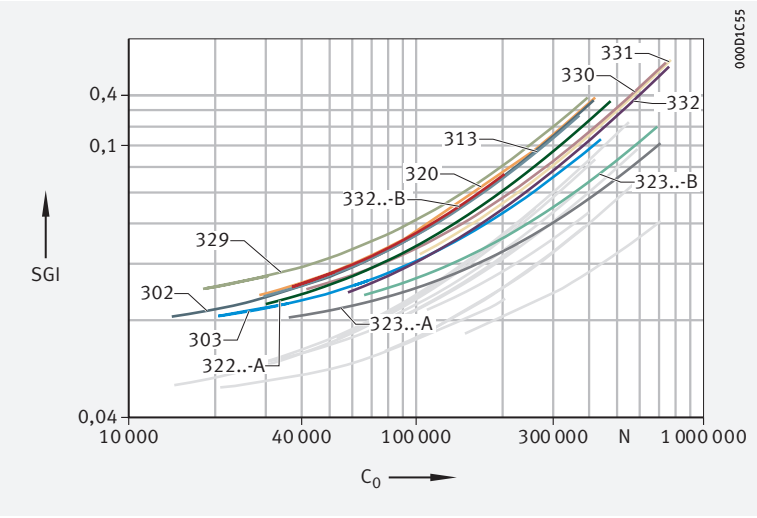

11
Schaeffler Noise Index for ISO tapered roller bearings

In comparison with X-life series
SGI = *Schaeffler Noise Index*
C_0 = *basic static load rating*

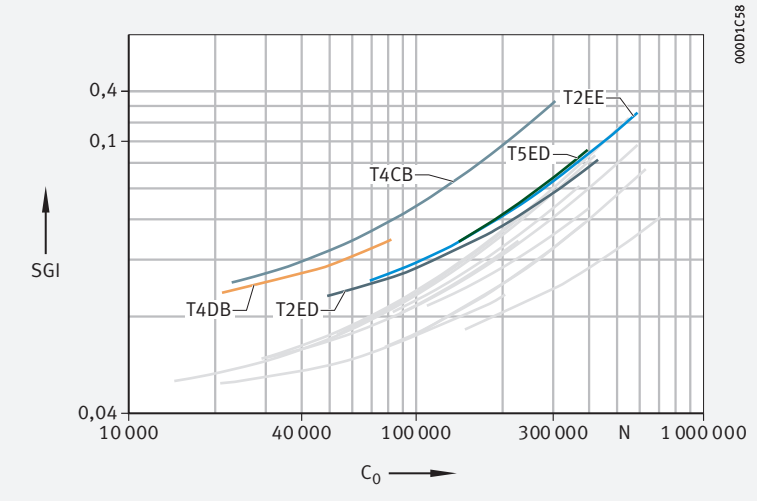

1.8 Temperature range

✎ *Limiting values*

The operating temperature of the bearings is limited by:

- the dimensional stability of the bearing rings and tapered rollers
- the cage
- the lubricant
- the seals

Possible operating temperatures of tapered roller bearings ➤ *574* | ▦ *1*.

▦ **1**
Permissible temperature ranges

Operating temperature	Open tapered roller bearings				Sealed tapered roller bearings	
	D ≦ 220 mm °C		D > 220 mm °C		°C	
	from	to	from	to	from	to
	–30	+120	–30	+200	–30	+110
					limited by the lubricating grease and seal material	

In the event of anticipated temperatures which lie outside the stated values, please contact Schaeffler.

1.9 Cages

✎ *Sheet steel cages are used as standard*

Open tapered roller bearings have sheet steel cages. Plastic cages are available by agreement.

✎ *Cages for JK0S*

Integral tapered roller bearings have cages made from glass fibre reinforced polyamide PA66.

For high continuous temperatures and applications with difficult operating conditions, bearings with sheet steel cages should be used. If there is any uncertainty regarding cage suitability, please consult Schaeffler.

1.10 Internal clearance

For tapered roller bearings, the axial internal clearance s_a is a characteristic value. This is the result of mounting the bearing against a second tapered roller bearing ➤ *574* | ⧉ *12*.

⧉ **12**
Axial internal clearance

s_a = *axial internal clearance*

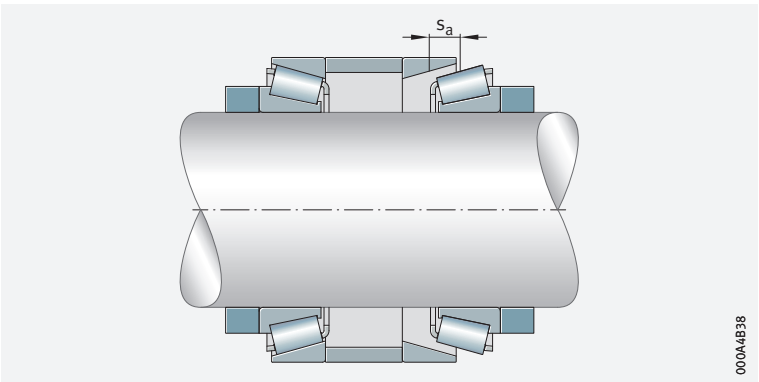

Matched tapered roller bearing sets

Simple mounting of the bearing sets in the mounting position is achieved by precise matching of the intermediate ring to the required geometric axial internal clearance. As a result, ready-to-fit, matched bearing sets are made available by Schaeffler. This offers high economical and technical advantages such as:

- Uncomplicated mounting: mounting defects are, for example, avoided by the intermediate ring, which is supplied already matched
- Knowledge and inclusion of the axial deflection of the bearings, as well as highly developed measurement methods, guarantee a precise design of the axial internal clearance. This ensures precise axial guidance of the shaft
- Simple maintenance and high operational reliability are achieved by means of design elements, lubrication grooves and holes in the intermediate ring

Indicating the axial internal clearance

The axial internal clearance is indicated explicitly in the designation. Ordering example ➤*582*|*17*.

1.11 Dimensions, tolerances

Dimension standards – bearings in metric sizes

The main dimensions of bearings in metric sizes correspond to ISO 355:2007 and DIN 720:2008. Bearings in metric sizes with the prefix KJ correspond to ANSI/ABMA 19.1:2011.

Chamfer dimensions

Tapered roller bearings in metric sizes

The limiting dimensions for the chamfer dimensions of metric tapered roller bearings to DIN/ISO correspond to ISO 582:1995. Overview and limiting values for metric tapered roller bearings to DIN/ISO ➤*139*|*30*.

Minimum chamfer dimensions for metric tapered roller bearings to ANSI/ABMA with the prefix KJ correspond to ANSI/ABMA 19.1:2011. The values are given in the product tables.

Bearings in inch sizes to ANSI/ABMA

Minimum chamfer dimensions r_{min} for bearings in inch sizes correspond to ANSI/ABMA 19.2:2013. The values are given in the product tables ➤*624*.

Tolerances

All tapered roller bearings to DIN 720, ISO 355 and integral tapered roller bearings have the tolerance class Normal to ISO 492:2014. In contrast to the standard, X-life bearings achieve improved radial runout values t_{Kia} and t_{Kea}, in addition to dedicated axial runout values t_{Sia} ➤*577*|*13*. Inner ring tolerances ➤*576*|*2*, outer ring tolerances ➤*576*|*3*, width tolerances ➤*576*|*4*. This excludes bearings of series 320, 329, 330, 331, 332 for d ≦ 200 mm: these have the tolerance class 6X ➤*577*. The width tolerances $t_{\Delta Ts}$ of the T7FC series with the suffix XL correspond to the tolerance class 6X in accordance with ISO 492:2014 ➤*577*|*5*.

2 Inner ring tolerances, tolerance class Normal

Tolerance symbols in accordance with ISO 492 ➤117|6
U = *upper limit deviation*
L = *lower limit deviation*
t_{Sia} = *axial runout to Schaeffler standard ➤577|13*

Nominal bore diameter		Bore deviation		Variation		Radial runout		Axial runout
						ISO 492	X-life	X-life
d		$t_{\Delta dmp}$		t_{Vdsp}	t_{Vdmp}	t_{Kia}	t_{Kia}	t_{Sia}
mm		µm		µm	µm	µm	µm	µm
over	incl.	U	L	max.	max.	max.	max.	max.
10	18	0	−12	12	9	15	7	10
18	30	0	−12	12	9	18	8	13
30	50	0	−12	12	9	20	9	13
50	80	0	−15	15	11	25	10	15
80	120	0	−20	20	15	30	13	18
120	180	0	−25	25	19	35	19	20
180	250	0	−30	30	23	50	24	25
250	315	0	−35	35	26	60	28	28
315	400	0	−40	40	30	70	33	35

3 Outer ring tolerances, tolerance class Normal

Tolerance symbols in accordance with ISO 492 ➤117|6
U = *upper limit deviation*
L = *lower limit deviation*

Nominal outside diameter		Deviation of outside diameter		Variation		Radial runout	
						ISO 492	X-life
D		$t_{\Delta Dmp}$		t_{VDsp}	t_{VDmp}	t_{Kea}	t_{Kea}
mm		µm		µm	µm	µm	µm
over	incl.	U	L	max.	max.	max.	max.
18	30	0	−12	12	9	18	9
30	50	0	−14	14	11	20	10
50	80	0	−16	16	12	25	13
80	120	0	−18	18	14	35	16
120	150	0	−20	20	15	40	19
150	180	0	−25	25	19	45	21
180	250	0	−30	30	23	50	25
250	315	0	−35	35	26	60	30
315	400	0	−40	40	30	70	34
400	500	0	−45	45	34	80	40
500	630	0	−50	60	38	100	46

4 Width tolerances, tolerance class Normal

Tolerance symbols in accordance with ISO 492 ➤117|6
U = *upper limit deviation*
L = *lower limit deviation*

Nominal bore diameter		Deviation of inner ring width		Deviation of outer ring width		Width deviation					
						$t_{\Delta Ts}$		$t_{\Delta T1s}$		$t_{\Delta T2s}$	
d		$t_{\Delta Bs}$		$t_{\Delta Cs}$		µm		µm		µm	
mm											
over	incl.	U	L	U	L	U	L	U	L	U	L
10	18	0	−120	0	−120	+200	0	+100	0	+100	0
18	30	0	−120	0	−120	+200	0	+100	0	+100	0
30	50	0	−120	0	−120	+200	0	+100	0	+100	0
50	80	0	−150	0	−150	+200	0	+100	0	+100	0
80	120	0	−200	0	−200	+200	−200	+100	−100	+100	−100
120	180	0	−250	0	−250	+350	−250	+150	−150	+200	−100
180	250	0	−300	0	−300	+350	−250	+150	−150	+200	−100
250	315	0	−350	0	−350	+350	−250	+150	−150	+200	−100
315	400	0	−400	0	−400	+400	−400	+200	−200	+200	−200

13
Axial and radial runout on the drawing

D = *outside diameter*
d = *bearing bore*

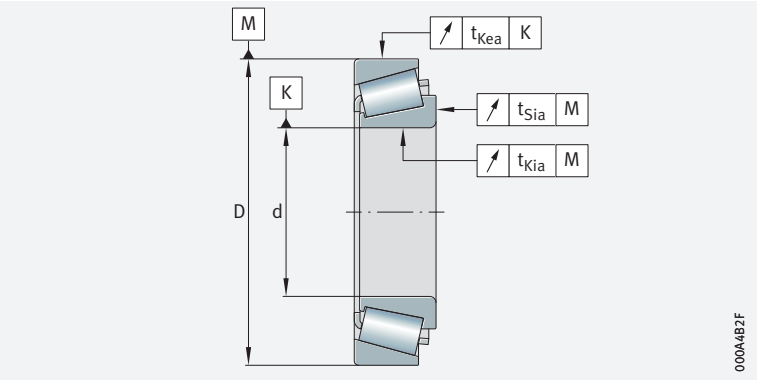

Series 320, 329, 330, 331, 332 for d ≦ 200 mm and bearings with the prefix KJ

Bearings 320, 329, 330, 331, 332 for d ≦ 200 mm and bearings with the prefix KJ have dimensional and running tolerances to the tolerance class Normal, but have restricted width tolerances to tolerance class 6X in accordance with ISO 492:2014 ➤*577*|▦ *5*; inner ring tolerances ➤*576*|▦ *2*, outer ring tolerances ➤*576*|▦ *3*.

▦ 5
Width tolerances, tolerance class 6X

Tolerance symbols in accordance with ISO 492 ➤117|▦ *6*
U = *upper limit deviation*
L = *lower limit deviation*

Nominal bore diameter		Deviation of inner ring width		Deviation of outer ring width		Width deviation					
d		$t_{\Delta Bs}$		$t_{\Delta Cs}$		$t_{\Delta Ts}$		$t_{\Delta T1s}$		$t_{\Delta T2s}$	
mm		µm		µm		µm		µm		µm	
over	incl.	U	L	U	L	U	L	U	L	U	L
10	18	0	−50	0	−100	+100	0	+50	0	+50	0
18	30	0	−50	0	−100	+100	0	+50	0	+50	0
30	50	0	−50	0	−100	+100	0	+50	0	+50	0
50	80	0	−50	0	−100	+100	0	+50	0	+50	0
80	120	0	−50	0	−100	+100	0	+50	0	+50	0
120	180	0	−50	0	−100	+150	0	+50	0	+100	0
180	200	0	−50	0	−100	+150	0	+50	0	+100	0

Restricted tolerances to tolerance class 5

Tapered roller bearings are also available by agreement with restricted tolerances to tolerance class 5 in accordance with ISO 492:2014; inner ring tolerances ➤*578*|▦*6*, outer ring tolerances ➤*578*|▦*7*, width tolerances ➤*578*|▦*8*.

▦6 *Restricted inner ring tolerances, tolerance class 5*

Tolerance symbols in accordance with ISO 492 ➤117|▦6
U = *upper limit deviation*
L = *lower limit deviation*

Nominal bore diameter d mm		Bore deviation $t_{\Delta dmp}$ µm		Variation t_{Vdsp} µm	Variation t_{Vdmp} µm	Radial runout t_{Kia} µm	Axial runout of lateral face t_{Sd} µm
over	incl.	U	L	max.	max.	max.	max.
10	18	0	−7	5	5	5	7
18	30	0	−8	6	5	5	8
30	50	0	−10	8	5	6	8
50	80	0	−12	9	6	7	8
80	120	0	−15	11	8	8	9
120	180	0	−18	14	9	11	10
180	250	0	−22	17	11	13	11
250	315	0	−25	19	13	13	13
315	400	0	−30	23	15	15	15

▦7 *Restricted outer ring tolerances, tolerance class 5*

Tolerance symbols in accordance with ISO 492 ➤117|▦6
U = *upper limit deviation*
L = *lower limit deviation*

Nominal outside diameter D mm		Deviation of outside diameter $t_{\Delta Dmp}$ µm		Variation t_{VDsp} µm	Variation t_{VDmp} µm	Radial runout t_{Kea} µm	Axial runout of lateral face t_{Si} µm
over	incl.	U	L	max.	max.	max.	max.
18	30	0	−8	6	5	6	4
30	50	0	−9	7	5	7	4
50	80	0	−11	8	6	8	4
80	120	0	−13	10	7	10	4,5
120	150	0	−15	11	8	11	5
150	180	0	−18	14	9	13	5
180	250	0	−20	15	10	15	5,5
250	315	0	−25	19	13	18	6,5
315	400	0	−28	22	14	20	6,5
400	500	0	−33	26	17	24	8,5
500	630	0	−38	30	20	30	10

▦8 *Width tolerances, tolerance class 5*

Tolerance symbols in accordance with ISO 492 ➤117|▦6
U = *upper limit deviation*
L = *lower limit deviation*

Nominal bore diameter d mm		Deviation of inner ring width $t_{\Delta Bs}$ µm		Deviation of outer ring width $t_{\Delta Cs}$ µm		Width deviation $t_{\Delta Ts}$ µm		$t_{\Delta T1s}$ µm		$t_{\Delta T2s}$ µm	
over	incl.	U	L	U	L	U	L	U	L	U	L
10	18	0	−200	0	−200	+200	−200	+100	−100	+100	−100
18	30	0	−200	0	−200	+200	−200	+100	−100	+100	−100
30	50	0	−240	0	−240	+200	−200	+100	−100	+100	−100
50	80	0	−300	0	−300	+200	−200	+100	−100	+100	−100
80	120	0	−400	0	−400	+200	−200	+100	−100	+100	−100
120	180	0	−500	0	−500	+350	−250	+150	−150	+200	−100
180	250	0	−600	0	−600	+350	−250	+150	−150	+200	−100
250	315	0	−700	0	−700	+350	−250	+150	−150	+200	−100
315	400	0	−800	0	−800	+400	−400	+200	−200	+200	−200

Total width tolerance of matched bearings

The tolerance for the total width 2T of matched bearing sets of design DF is determined from the axial internal clearance and the deviations of the width $t_{\Delta Ts}$ of the single bearings. The tolerance for the total width 2B is determined from the deviations of the inner ring width $t_{\Delta Bs}$ of the single bearings ➤ *576* | ▦ *4*.

Bearings in inch sizes to ANSI/ABMA

Tapered roller bearings with the prefix K are manufactured as standard to the following tables. The values in the tables meet the requirements for normal tolerances in accordance with ANSI/ABMA 19.2:2013 and, in some cases, exceed these by a considerable margin.
Exception: bearings with the prefix KJ correspond to ISO 492:2014.
The bore and outside diameters of bearings in inch sizes have plus tolerances; inner ring tolerances ➤ *579* | ▦ *9*, outer ring tolerances ➤ *579* | ▦ *10*, width tolerances ➤ *580* | ▦ *11*.

▦ 9
Inner ring tolerances, bearings in inch sizes

Tolerance symbols in accordance with ISO 492 ➤ *117* | ▦ *6*
U = *upper limit deviation*
L = *lower limit deviation*
t_{Sia} = *axial runout to Schaeffler standard* ➤ *577* | 🗨 *13*

Nominal bore diameter		Bore deviation		Radial runout		Axial runout
				According to standard	X-life	X-life
d		$t_{\Delta dmp}$		t_{Kia}	t_{Kia}	t_{Sia}
mm		µm		µm	µm	µm
over	incl.	U	L	max.	max.	max.
10	18	+12	0	15	7	10
18	30	+12	0	18	8	13
30	50	+12	0	20	9	13
50	80	+12	0	25	10	15
80	120	+25	0	30	13	18
120	180	+25	0	35	19	20
180	250	+25	0	50	24	25
250	304,8	+25	0	50	28	28
304,8	315	+50	0	50	28	28
315	400	+50	0	50	33	35
400	500	+50	0	50	39	38
500	609,6	+50	0	50	45	43
609,6	800	+75	0	75	54	–

▦ 10
Outer ring tolerances, bearings in inch sizes

Tolerance symbols in accordance with ISO 492 ➤ *117* | ▦ *6*
U = *upper limit deviation*
L = *lower limit deviation*

Nominal outside diameter		Bore deviation		Radial runout	
				According to standard	X-life
D		$t_{\Delta Dmp}$		t_{Kea}	t_{Kea}
mm		µm		µm	µm
over	incl.	U	L	max.	max.
18	30	+25	0	18	9
30	50	+25	0	20	10
50	80	+25	0	25	13
80	120	+25	0	35	16
120	150	+25	0	40	19
150	180	+25	0	45	21
180	250	+25	0	50	25
250	304,8	+25	0	50	29
304,8	609,6	+50	0	50	45
609,6	800	+75	0	75	54

11 *Width tolerances, bearings in inch sizes*

Tolerance symbols in accordance with ISO 492 ➤*117*|▦*6*
U = *upper limit deviation*
L = *lower limit deviation*

Nominal bore diameter d mm		Deviation of inner ring width $t_{\Delta Bs}$ µm		Deviation of outer ring width $t_{\Delta Cs}$ µm		Width deviation $t_{\Delta Ts}$ µm	
over	incl.	U	L	U	L	U	L
10	50	0	−120	0	−120	+200	0
50	80	0	−150	0	−150	+200	0
80	101,6	0	−200	0	−200	+200	0
101,6	120	0	−200	0	−200	+350	−250
120	180	0	−250	0	−250	+350	−250
180	304,8	0	−250	0	−250	+350	−250
304,8	800	0	−250	0	−250	+375	−375

1.12 Suffixes

Suffixes describe the design and features of a bearing in more detail.

Observe the ordering and designation system for matched tapered roller bearings ➤*569* and ➤*582*|🗀*17*.

12 *Suffixes and corresponding descriptions*

Suffix	Description of suffix
A	Modified internal construction (excluding bearings to ANSI/ABMA)
B	Increased contact angle (for bearings to DIN)
X	External dimensions matched to international standards (for bearings to DIN)
XL	X-life

13 *Suffixes for matched bearings*

Suffix	Description of suffix
DF	Two tapered roller bearings matched in an X arrangement, with an intermediate ring between the outer rings
A	Initiates the axial internal clearance range for matched tapered roller bearings; example: A80-120 (axial internal clearance between 80 µm and 120 µm)
VA	Initiates the axial preload range for matched tapered roller bearings; example: VA20-40 (preload between 20 µm and 40 µm)

Tapered roller bearings for special applications

Special tapered roller bearings are available for applications where tapered roller bearing arrangements are used under very difficult operating conditions, for example at high operating temperatures or with heavily contaminated lubricating oil. In such cases, please consult Schaeffler. Suffixes for special designs ➤*580*|▦*14*.

14 *Special designs, available by agreement*

Suffix	Description of suffix
DBA	Two tapered roller bearings matched in an O arrangement, with an intermediate ring between the outer rings and the inner rings in variant A
DFA	Two tapered roller bearings matched in an X arrangement, with an intermediate ring between the outer rings in variant A
DTA	Two tapered roller bearings matched in a tandem arrangement, with an intermediate ring between the outer rings and the inner rings in variant A
P5	Bearing in tolerance class 5

Other special designs with suffixes are available by agreement, such as for:

- dimensional stabilisation
- special heat treatment
- special materials
- tapered roller bearings with reduced friction
- tolerance classes
- restricted width tolerances

1.13 Structure of bearing designation

With ***medias*** interchange, equivalent Schaeffler bearing designations can be determined for bearing designations from other rolling bearing manufacturers *https://www.schaeffler.de/std/1B69*.

Examples of composition of bearing designation

The designation of bearings follows a set model. Examples ➤*581*|*14* to ➤*582*|*18*. The composition of designations is subject to DIN 623-1:1993 ➤*102*|*10*, DIN 720:2008 ➤*101*|*9*, ISO 10317:2008, ISO 355:2007 ➤*101*|*8*, ANSI/ABMA 19.1:2011 and ANSI/ABMA 19.2:2013.

14
Single row tapered roller bearing, metric, to DIN 623-1:1993, DIN 720:2008: designation structure

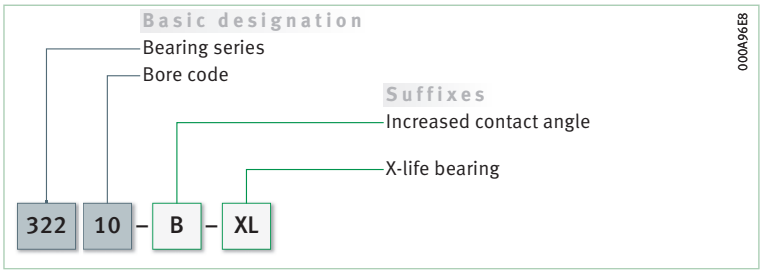

15
Single row tapered roller bearing, metric, to ISO 10317:2008, ISO 355:2007: designation structure

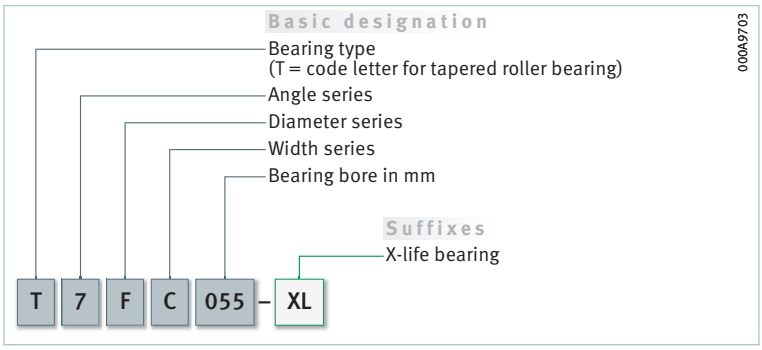

16
Single row tapered roller bearing, metric, to ANSI/ABMA 19.1:2011; inch sizes, to ANSI/ABMA 19.2:2013: designation structure

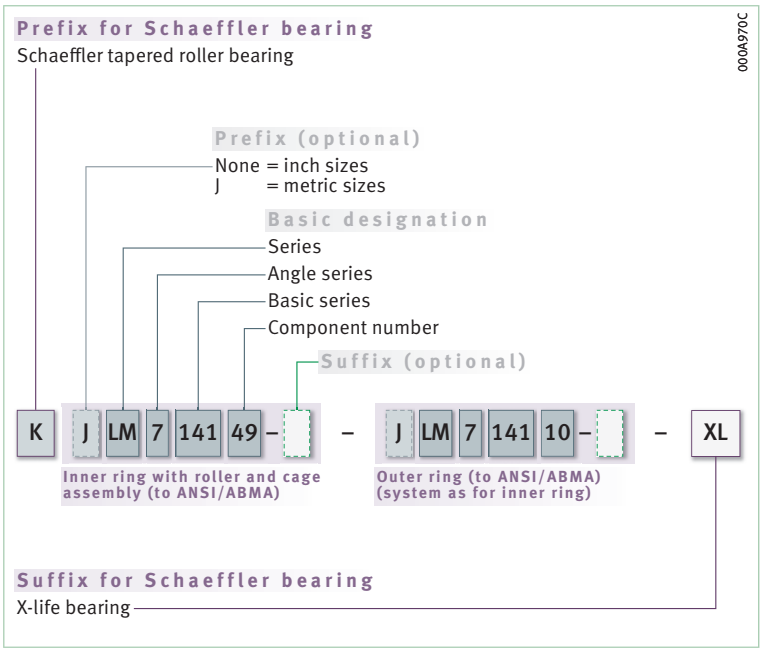

17
Matched tapered roller bearing pair: designation structure

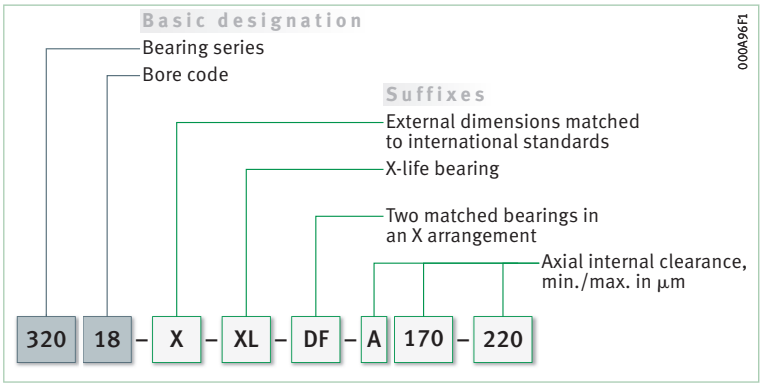

18
Integral tapered roller bearing: designation structure

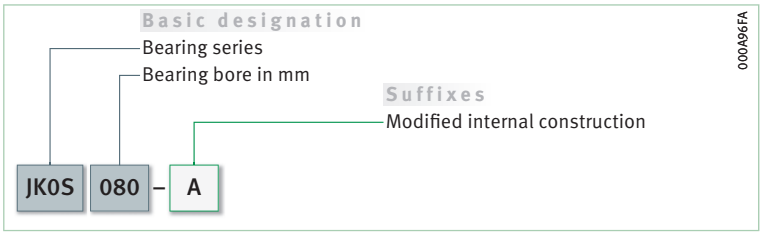

1.14 Dimensioning

Equivalent dynamic bearing load

✎ *P = F_r under purely radial load of constant magnitude and direction*

The basic rating life equation $L = (C_r/P)^p$ used in the dimensioning of radial bearings under dynamic load assumes a radial load P of constant magnitude. If the bearing is subjected to purely radial load, the radial load F_r is used directly in the rating life equation for P ($P = F_r$).

✎ *P is a substitute force for combined load*

If this condition is not met, a constant radial force must first be determined for the rating life calculation that (in relation to the rating life) represents an equivalent load. This force is known as the equivalent dynamic bearing load P.

✎ *$F_a/F_r \leqq e$ or $F_a/F_r > e$*

The calculation of P is dependent on the load ratio F_a/F_r and the factor e.

✎ *Single bearings and JKOS bearings*

For single bearings under dynamic load and integral tapered roller bearings ➤ *583* | *1* and ➤ *583* | *2*.

1
Equivalent dynamic load

$$\frac{F_a}{F_r} \leqq e \quad \Rightarrow \quad P = F_r$$

2
Equivalent dynamic load

$$\frac{F_a}{F_r} > e \quad \Rightarrow \quad P = 0{,}4 \cdot F_r + Y \cdot F_a$$

Legend

P	N	Equivalent dynamic bearing load
F_r	N	Radial load
F_a	N	Resulting axial force ➤ *584*	*15*. The information in the section “Calculation of internal resulting axial force F_a for single bearings” must be taken into consideration when calculating F_a ➤ *584*
e, Y	–	Factors ➤ *596*.

✎ *Bearing pairs in O or X arrangement*

For bearing pairs under dynamic load in an O or X arrangement comprising single bearings ➤ *583* | *3* and ➤ *583* | *4*.

3
Equivalent dynamic load

$$\frac{F_a}{F_r} \leqq e \quad \Rightarrow \quad P = F_r + 1{,}12 \cdot Y \cdot F_a$$

4
Equivalent dynamic load

$$\frac{F_a}{F_r} > e \quad \Rightarrow \quad P = 0{,}67 \cdot F_r + 1{,}68 \cdot Y \cdot F_a$$

Legend

P	N	Equivalent dynamic bearing load
F_r	N	Radial load
F_a	N	Resulting axial force ➤ *584*	*15*. The information in the section “Calculation of internal resulting axial force F_a for single bearings” must be taken into consideration when calculating F_a ➤ *584*
e, Y	–	Factors ➤ *596*.

Matched bearing pairs

For matched bearing pairs under dynamic load 313 (320, 322, 329)..-DF-A ➤*584*| *5* and ➤*584*| *6*.

5
Equivalent dynamic load

$$\frac{F_a}{F_r} \leqq e \quad \Rightarrow \quad P = F_r + Y_1 \cdot F_a$$

6
Equivalent dynamic load

$$\frac{F_a}{F_r} > e \quad \Rightarrow \quad P = 0{,}67 \cdot F_r + Y_2 \cdot F_a$$

Legend

P	N	Equivalent dynamic bearing load
F_r	N	Radial load
F_a	N	Resulting axial force. The information in the section "Calculation of internal resulting axial force F_a for single bearings" must be taken into consideration when calculating F_a ➤*584*
e, Y_1, Y_2	–	Factors ➤*644*|▦.

Calculation of internal resulting axial force F_a for single bearings and for bearing pairs in an X and O arrangement

Reasons why the internal resulting axial force F_a must be taken into consideration

Single row tapered roller bearings transmit radial forces from one raceway to the other oblique to the bearing axis. In the case of a shaft supported by two single row tapered roller bearings of identical or different size, the radial load on bearing A leads, due to the inclination of the raceways ($\alpha_0 \neq 0°$), to an axial load on bearing B. The radial load on bearing B also has the effect of an axial load on bearing A; external forces in bearing systems of this type ➤*585*|⧉ *19* and ➤*585*|⧉ *20*. This internal resulting axial force F_a must be taken into consideration in the calculation of the equivalent dynamic bearing load P.

Equations for calculation

Equations for calculation of resulting axial force F_a ➤*584*|▦ *15*.

Preconditions for calculation

Bearing A is subjected to a radial load F_{rA}, bearing B to a radial load F_{rB} ➤*585*|⧉ *19* and ➤*585*|⧉ *20*. F_{rA} and F_{rB} act at the central pressure points of the bearings and are always regarded as positive. The bearings are clearance-free, but without preload.

The stated equations for determining the axial load correspond to an approximation carried out under the assumption of a load zone of 180° in bearings under radial load. For a more precise calculation, the use of BEARINX or BEARINX-online is recommended.

15
Equations for calculation of the internal resulting axial force F_a

Parameters ➤*584*| *6*, ➤*585*|⧉ *19* and ➤*585*|⧉ *20*

$Y_A = Y_B$ ➤*596*|▦

Case	Load ratio	External axial force
1	$\frac{F_{rA}}{Y_A} \leqq \frac{F_{rB}}{Y_B}$	$K_a \geqq 0$
2	$\frac{F_{rA}}{Y_A} > \frac{F_{rB}}{Y_B}$	$K_a > 0{,}47 \cdot \left(\frac{F_{rA}}{Y_A} - \frac{F_{rB}}{Y_B}\right)$
3		$K_a \leqq 0{,}47 \cdot \left(\frac{F_{rA}}{Y_A} - \frac{F_{rB}}{Y_B}\right)$

continued ▼

15
Equations for calculation of the internal resulting axial force F_a

Parameters ➤584| 6, ➤585| 19 *and* ➤585| 20

$Y_A = Y_B$ ➤596|

Case	Load ratio	Resulting axial force F_a	
		Bearing A	Bearing B
1	$\frac{F_{rA}}{Y_A} \leqq \frac{F_{rB}}{Y_B}$	$F_{aA} = K_a + 0{,}47 \cdot \frac{F_{rB}}{Y_B}$	F_a is not taken into consideration in the calculation
2	$\frac{F_{rA}}{Y_A} > \frac{F_{rB}}{Y_B}$	$F_{aA} = K_a + 0{,}47 \cdot \frac{F_{rB}}{Y_B}$	F_a is not taken into consideration in the calculation
3		F_a is not taken into consideration in the calculation	$F_{aB} = 0{,}47 \cdot \frac{F_{rA}}{Y_A} - K_a$

continued ▲

19
Adjusted bearing arrangement with two single row tapered roller bearings in O arrangement, external forces

K_a = *external axial force acting on the shaft*
F_{rA} = *radial load, bearing A*
F_{rB} = *radial load, bearing B*

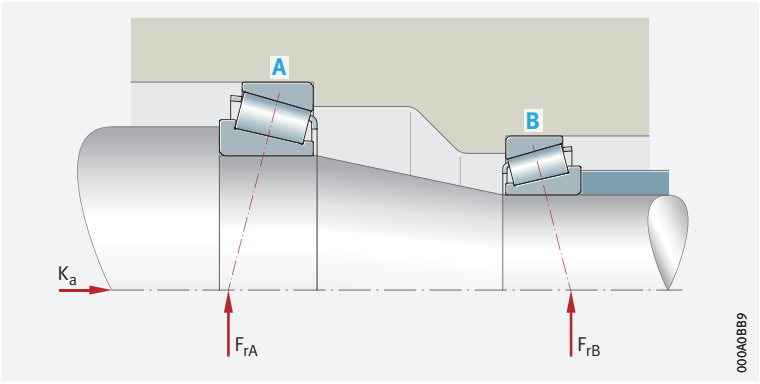

20
Adjusted bearing arrangement with two single row tapered roller bearings in X arrangement, external forces

K_a = *external axial force acting on the shaft*
F_{rA} = *radial load, bearing A*
F_{rB} = *radial load, bearing B*

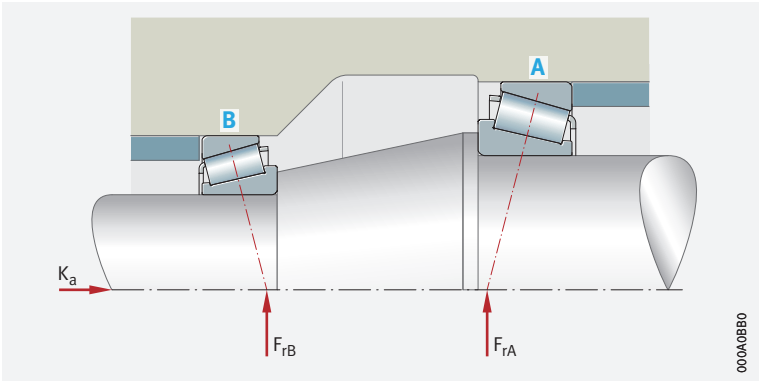

Example of calculation of internal resulting axial force F_a

Bearing arrangement for pinion shaft

Two single row tapered roller bearings are used for the bearing arrangement of a pinion shaft ➤*586*|*21*. The bearing arrangement should be adjusted and in an O arrangement. In order to calculate the basic rating life of bearing A, the equivalent dynamic bearing load P_A must be determined.

21
BEARINX calculation model: load on bearing A and B

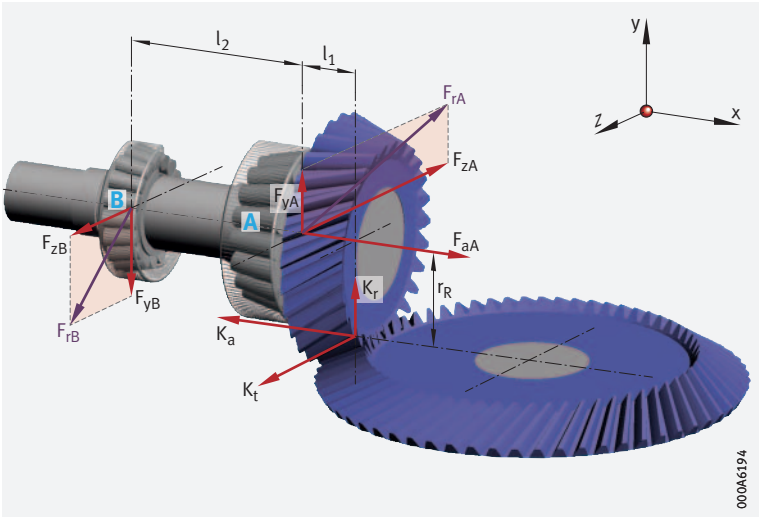

K_a = *external axial force = 6,52 kN*
K_r = *external radial force*
K_t = *tangential force*
F_{rA} = *radial load, bearing A (resultant of reaction forces F_{yA} and F_{zA})*
F_{rB} = *radial load, bearing B (resultant of reaction forces F_{yB} and F_{zB})*
l_1 = *spacing between pinion and contact cone apex of bearing A*
l_2 = *spacing between contact cone apexes of bearing A and bearing B*

The resulting radial forces F_{rA} and F_{rB} on the bearings must be determined from the external radial force K_r and the tangential force K_t by the solution of the equilibrium of moments and forces on the shaft. Result:

- $F_{rA} = 7,3$ kN
- $F_{rB} = 2,2$ kN

In a bearing arrangement with two single bearings, the resulting axial force F_a must be taken into consideration

Since this is an adjusted bearing arrangement with two single bearings, the internal resulting axial force F_a in the bearing system must be taken into consideration in the bearing calculation in accordance with ➤*584*|▦*15*. For both tapered roller bearings $Y_A = Y_B = 1,6$. Loads ➤*586*|*21*. Tapered roller bearing 32206-XL is envisaged for bearing A.

Step 1

Calculate the load ratio using ➤*586*|*f7*.

f7
Load ratio

$$\frac{F_{rA}}{Y_A} ; \frac{F_{rB}}{Y_B}$$

$$\frac{F_{rA}}{Y_A} = \frac{7,3\ \text{kN}}{1,6} = 4,56$$

$$\frac{F_{rB}}{Y_B} = \frac{2,2\ \text{kN}}{1,6} = 1,38$$

$$\frac{F_{rA}}{Y_A} > \frac{F_{rB}}{Y_B}$$

Step 2

Compare the result with possible cases ➤584| 15. Case 2 or case 3 can be considered ➤587| 16.

16 *Equations for calculation of the internal resulting axial force F_a*

Parameters ➤584| 6

$Y_A = Y_B = 1{,}6$

Case	Load ratio	External axial force	Resulting axial force F_a	
			Bearing A	Bearing B
2	$\frac{F_{rA}}{Y_A} > \frac{F_{rB}}{Y_B}$	$K_a > 0{,}47 \cdot \left(\frac{F_{rA}}{Y_A} - \frac{F_{rB}}{Y_B}\right)$	$F_{aA} = K_a + 0{,}47 \cdot \frac{F_{rB}}{Y_B}$	–
3		$K_a \leqq 0{,}47 \cdot \left(\frac{F_{rA}}{Y_A} - \frac{F_{rB}}{Y_B}\right)$	–	$F_{aB} = 0{,}47 \cdot \frac{F_{rA}}{Y_A} - K_a$

Step 3

Using ➤587| 8, check whether case 2 applies ➤587| 16.

8 *External axial force in relation to load ratio*

$$K_a > 0{,}47 \cdot \left(\frac{F_{rA}}{Y_A} - \frac{F_{rB}}{Y_B}\right)$$

$$6{,}52\,\text{kN} > 0{,}47\left(\frac{7{,}30\,\text{kN}}{1{,}6} - \frac{2{,}20\,\text{kN}}{1{,}6}\right)$$
$$> 0{,}47\left(4{,}563\,\text{kN} - 1{,}375\,\text{kN}\right)$$
$$6{,}52\,\text{kN} > 1{,}498\,\text{kN}$$

If case 2 applies ➤587| 16. This means that bearing A supports the external axial force K_a.

Step 4

Calculating F_a

Using ➤587| 9, calculate the internal resulting axial force F_a for bearing A. The calculations are in accordance with ➤587| 16, case 2.

9 *Internal resulting axial force for bearing A*

$$F_{aA} = K_a + 0{,}47 \cdot \frac{F_{rB}}{Y_B}$$

$$F_{aA} = 6{,}52\,\text{kN} + 0{,}47 \cdot \frac{2{,}20\,\text{kN}}{1{,}6}$$
$$= 7{,}17\,\text{kN}$$

Example of calculation of P

✎ Using value F_a in the calculation of P

Using ➤*588*| *f 10*, calculate the ratio between the axial force F_a and radial force F_r of bearing A and compare this with the limit value e in accordance with the product table (in this instance e = 0,37).

f 10
Load ratio, bearing A

$$\frac{F_{aA}}{F_{rA}}$$

$$\frac{7{,}17\ \text{kN}}{7{,}3\ \text{kN}} = 0{,}98$$

This gives:

$$\frac{F_a}{F_r} > e = 0{,}37$$

As a result, the axial force F_a of bearing A (F_{aA}) must be taken into consideration within the equivalent bearing load P_A of bearing A ➤*583*| *f 2* and thus ➤*588*| *f 11* apply.

f 11
P for $F_a/F_r > e$

$$P_A = 0{,}4 \cdot F_{rA} + Y_A \cdot F_{aA}$$

$$P_A = 0{,}4 \cdot 7{,}3\ \text{kN} + 1{,}6 \cdot 7{,}17\ \text{kN}$$
$$= 14{,}39\ \text{kN}$$

The equivalent dynamic bearing load P_A of bearing A is then used to calculate the basic rating life of bearing A.

Equivalent static bearing load

✎ Single bearings and JK0S bearings

For single bearings under static load and integral tapered roller bearings ➤*588*| *f 12* and ➤*588*| *f 13*.

f 12
Equivalent static load

$$\frac{F_{0a}}{F_{0r}} \leqq \frac{1}{2 \cdot Y_0} \quad \Rightarrow \quad P_0 = F_{0r}$$

f 13
Equivalent static load

$$\frac{F_{0a}}{F_{0r}} > \frac{1}{2 \cdot Y_0} \quad \Rightarrow \quad P_0 = 0{,}5 \cdot F_{0r} + Y_0 \cdot F_{0a}$$

Legend

P_0	N	Equivalent static bearing load
F_{0r}, F_{0a}	N	Largest radial or axial load present (maximum load)
Y_0	–	Axial load factor.

For bearing pairs under static load in an O or X arrangement ➤589| 14.

14
Equivalent static load

$$P_0 = F_{0r} + 2 \cdot Y_0 \cdot F_{0a}$$

Legend

P_0	N	Equivalent static bearing load
F_{0r}, F_{0a}	N	Largest radial or axial load present (maximum load)
Y_0	–	Axial load factor.

For matched bearing pairs under static load 313 (320, 322, 329)..-DF-A.. ➤589| 15.

15
Equivalent static load

$$P_0 = F_{0r} + Y_0 \cdot F_{0a}$$

Legend

P_0	N	Equivalent static bearing load
F_{0r}, F_{0a}	N	Largest radial or axial load present (maximum load)
Y_0	–	Axial load factor.

Static load safety factor

✎ $S_0 = C_0/P_0$

In addition to the basic rating life L (L_{10h}), it is also always necessary to check the static load safety factor S_0 ➤589| 16.

16
Static load safety factor

$$S_0 = \frac{C_0}{P_0}$$

Legend

S_0	–	Static load safety factor
C_0	N	Basic static load rating
P_0	N	Equivalent static bearing load.

1.15 Minimum load

✎ *In order to prevent damage due to slippage, a minimum radial load of $P > C_{0r}/60$ is required*

In order that no slippage occurs between the contact partners, the tapered roller bearings must be constantly subjected to a sufficiently high load. Based on experience, a minimum radial load of the order of $P > C_{0r}/60$ is thus necessary. In most cases, however, the radial load is already higher than the requisite minimum load due to the weight of the supported parts and the external forces.

If the minimum radial load is lower than indicated above, please consult Schaeffler.

1.16 Design of bearing arrangements

Radial location of bearings

For secure radial location, tight fits are necessary

In addition to supporting the rings adequately, the bearings must also be securely located in a radial direction, to prevent creep of the bearing rings on the mating parts under load. This is generally achieved by means of tight fits between the bearing rings and the mating parts. If the rings are not secured adequately or correctly, this can cause severe damage to the bearings and adjacent machine parts. Influencing factors, such as the conditions of rotation, magnitude of the load, internal clearance, temperature conditions, design of the mating parts and the mounting and dismounting options must be taken into consideration in the selection of fits.

If shock type loads occur, tight fits (transition fit or interference fit) are required to prevent the rings from coming loose at any point. Clearance, transition or interference fits ➤*152*|▦*6* and ➤*160*|▦*7*.

The following information provided in Technical principles must be taken into consideration in the design of bearing arrangements:

- criteria for selection of fits ➤*146*
- conditions of rotation ➤*147*
- tolerance classes for cylindrical shaft seats (radial bearings) ➤*149*|▦*2*
  excluding tapered roller bearings to ANSI/ABMA 19.2:2013 or with special tolerances
- shaft fits ➤*152*|▦*6*
- tolerance classes for bearing seats in housings (radial bearings) ➤*150*|▦*4*
  excluding tapered roller bearings to ANSI/ABMA 19.2:2013 or with special tolerances
- housing fits ➤*160*|▦*7*

Shaft and housing fits for bearings in inch sizes

For bearings with a different tolerance accuracy, such as ANSI/ABMA 19.2:2013 for example, the tolerance class must be shifted in accordance with the fit.

Shaft and housing fits for integral tapered roller bearings

Recommended shaft and housing tolerances for integral tapered roller bearings ➤*590*|▦*17*.

▦ **17** *Tolerances for integral tapered roller bearings*

Circumferential load	Tolerance class	
	Shaft	Housing
on inner ring	m6 Ⓔ	H7 Ⓔ
on outer ring	g6 Ⓔ	M7 Ⓔ

Axial location of bearings

The bearings must also be securely located in an axial direction

As a tight fit alone is not normally sufficient to also locate the bearing rings securely on the shaft and in the housing bore in an axial direction, this must usually be achieved by means of an additional axial location or retention method. The axial location of the bearing rings must be matched to the type of bearing arrangement. Shaft and housing shoulders, housing covers, nuts, spacer rings and retaining rings etc., are fundamentally suitable ➤*593*|◯□*22*.

Dimensional, geometrical and running accuracy of the bearing seats

✎A minimum of IT6 should be provided for the shaft seat and a minimum of IT7 for the housing seat

The accuracy of the cylindrical bearing seat on the shaft and in the housing should correspond to the accuracy of the bearing used. For single row tapered roller bearings with the tolerance class Normal or 6X, the shaft seat should correspond to a minimum of standard tolerance grade IT6
and the housing seat to a minimum of IT7; with tolerance class 5, the shaft seat should correspond to a minimum of IT5 and the housing seat to a minimum of IT6. Guide values for the geometrical and positional tolerances of bearing seating surfaces ➤*591*|▦ *18*. Tolerances t_1 to t_3 in accordance with ➤*170*|◯ *11*. Numerical values for IT grades ➤*591*|▦ *19*.

▦ 18
Guide values for the geometrical and positional tolerances of bearing seating surfaces

Bearing tolerance class		Bearing seating surface	Standard tolerance grades to ISO 286-1 (IT grades)			
to ISO 492	to DIN 620		Diameter tolerance	Roundness tolerance t_1	Parallelism tolerance t_2	Total axial runout tolerance of abutment shoulder t_3
Normal 6X	PN (P0) P6X	Shaft	IT6 (IT5)	Circumferential load IT4/2	Circumferential load IT4/2	IT4
				Point load IT5/2	Point load IT5/2	
		Housing	IT7 (IT6)	Circumferential load IT5/2	Circumferential load IT5/2	IT5
				Point load IT6/2	Point load IT6/2	
5	P5	Shaft	IT5	Circumferential load IT2/2	Circumferential load IT2/2	IT2
				Point load IT3/2	Point load IT3/2	
		Housing	IT6	Circumferential load IT3/2	Circumferential load IT3/2	IT3
				Point load IT4/2	Point load IT4/2	

▦ 19
Numerical values for ISO standard tolerances (IT grades) to ISO 286-1:2010

IT grade	Nominal dimension in mm											
	over	**10**	**18**	**30**	**50**	**80**	**120**	**180**	**250**	**315**	**400**	**500**	**630**
	incl.	**18**	**30**	**50**	**80**	**120**	**180**	**250**	**315**	**400**	**500**	**630**	**800**
	Values in µm												
IT2		2	2,5	2,5	3	4	5	7	8	9	10	11	13
IT3		3	4	4	5	6	8	10	12	13	15	16	18
IT4		5	6	7	8	10	12	14	16	18	20	22	25
IT5		8	9	11	13	15	18	20	23	25	27	32	36
IT6		11	13	16	19	22	25	29	32	36	40	44	50
IT7		18	21	25	30	35	40	46	52	57	63	70	80

Roughness of cylindrical bearing seats

Ra must not be too high

The roughness of the bearing seats must be matched to the tolerance class of the bearings. The mean roughness value Ra must not be too high, in order to maintain the interference loss within limits. The shafts must be ground, while the bores must be precision turned. Guide values as a function of the IT grade of bearing seating surfaces ➤592| 20.

20 *Roughness values for cylindrical bearing seating surfaces – guide values*

Nominal diameter of the bearing seat d (D) mm		Recommended mean roughness value for ground bearing seats Ramax µm			
		Diameter tolerance (IT grade)			
over	incl.	IT7	IT6	IT5	IT4
–	80	1,6	0,8	0,4	0,2
80	500	1,6	1,6	0,8	0,4
500	1 250	3,2[1)]	1,6	1,6	0,8

1) *For the mounting of bearings using the hydraulic method, a value Ra = 1,6 µm must not be exceeded.*

Mounting dimensions for the contact surfaces of bearing rings

The contact surfaces for the rings must be of sufficient height

The mounting dimensions of the shaft and housing shoulders, and spacer rings etc., must ensure that the contact surfaces for the bearing rings are of sufficient height. However, they must also reliably prevent rotating parts of the bearing from grazing stationary parts. Proven mounting dimensions for the radii and diameters of the abutment shoulders are defined in accordance with DIN 5418 ➤596|. These dimensions are limiting dimensions (maximum or minimum dimensions); the actual values should not be higher or lower than specified.

If single row tapered roller bearings are mounted in a tandem arrangement, it must be ensured that the end faces of the outer rings in contact with each other have sufficient overlap. In case of doubt, please consult Schaeffler.

Cage projection

In the open bearings, the cages project laterally to a certain extent. In order to prevent the cages from grazing the adjacent construction, the lateral minimum distances C_a and C_b in the product tables must be taken into consideration in the design of the adjacent construction ➤596|.

Adjustment of bearings

Always adjust single bearings against a second bearing

Due to their internal construction, single row tapered roller bearings cannot be mounted alone, but must always be used together with a second bearing or as a bearing set ➤593| 22. In bearing arrangements with two individual single row bearings, these must be adjusted against each other until the requisite preload or desired clearance is achieved ➤593| 22. The preload is only achieved once the bearings have been fitted and is dependent on the adjustment against the second bearing.

Select the adjustment such that full function and operational reliability of the bearings is ensured

The correct adjustment of the bearings has a considerable influence on the function and operational reliability of the bearing arrangement. If the clearance is too large, the load carrying capacity of the bearings will not be fully utilised; if the preload is too high, the increased friction losses will give rise to higher operating temperatures, which will, in turn, have a negative effect on the rating life of the bearings.

In order that the rollers can be positioned correctly, the shaft or housing must be rotated several times in both directions when adjusting the bearings.

22
Adjusted bearing arrangement with two single row tapered roller bearings

H = *support spacing*

① *Tapered roller bearings mounted in an O arrangement and adjusted against each other*

② *Fixing nut*

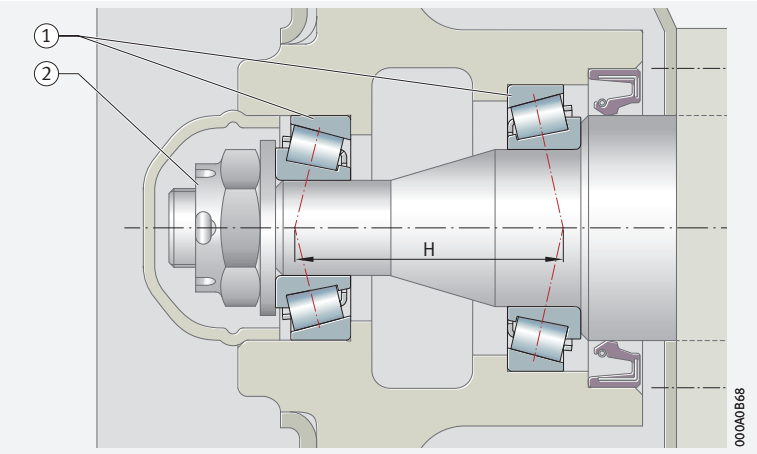

Matched bearings

Adjustment not required for matched bearing sets

Matched tapered roller bearings do not need to be adjusted ➤*564|1.1*. The desired internal clearance or required preload is already set at the manufacturing plant.

1.17 Mounting and dismounting

The mounting and dismounting options for tapered roller bearings, by thermal, hydraulic or mechanical methods, must be taken into consideration in the design of the bearing position.

Ensure that the bearings are not damaged during mounting

Integral tapered roller bearings are not separable. In the mounting of such bearings, the mounting forces must always be applied to the bearing ring with a tight fit.

Schaeffler Mounting Handbook

Rolling bearings must be handled with great care

Rolling bearings are well-proven precision machine elements for the design of economical and reliable bearing arrangements, which offer high operational security. In order that these products can function correctly and achieve the envisaged operating life without detrimental effect, they must be handled with care.

The Schaeffler Mounting Handbook MH 1 gives comprehensive information about the correct storage, mounting, dismounting and maintenance of rotary rolling bearings *https://www.schaeffler.de/std/1D53*. It also provides information which should be observed by the designer, in relation to the mounting, dismounting and maintenance of bearings, in the original design of the bearing position. This book is available from Schaeffler on request.

1.18 Legal notice regarding data freshness

✎ The further development of products may also result in technical changes to catalogue products

Of central interest to Schaeffler is the further development and optimisation of its products and the satisfaction of its customers. In order that you, as the customer, can keep yourself optimally informed about the progress that is being made here and with regard to the current technical status of the products, we publish any product changes which differ from the printed version in our electronic product catalogue.

§ We therefore reserve the right to make changes to the data and illustrations in this catalogue. This catalogue reflects the status at the time of printing. More recent publications released by us (as printed or digital media) will automatically precede this catalogue if they involve the same subject. Therefore, please always use our electronic product catalogue to check whether more up-to-date information or modification notices exist for your desired product.

Link to electronic product catalogue

The following link will take you to the Schaeffler electronic product catalogue: *https://medias.schaeffler.com*.

1.19 Further information

In addition to the data in this chapter, the following chapters in Technical principles must also be observed in the design of bearing arrangements:

- Determining the bearing size ➤*34*
- Rigidity ➤*54*
- Friction and increases in temperature ➤*56*
- Speeds ➤*64*
- Bearing data ➤*97*
- Lubrication ➤*70*
- Sealing ➤*185*
- Design of bearing arrangements ➤*141*
- Mounting and dismounting ➤*194*



Tapered roller bearings

Single row to DIN/ISO

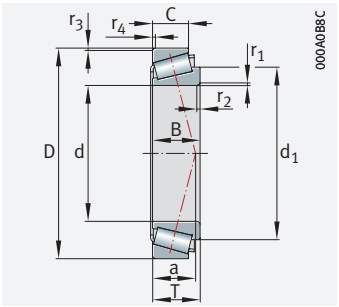

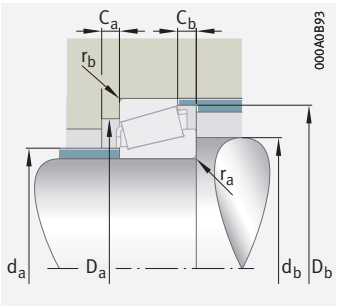

Mounting dimensions

d = 15 – 25 mm

Main dimensions					Basic load ratings		Fatigue limit load	Limiting speed	Speed rating	Mass	Designation	Interchange designation to ISO 10317 and ISO 355
d	D	B	C	T	dyn. C_r	stat. C_{0r}	C_{ur}	n_G	$n_{\vartheta r}$	m	➤*580* | *1.12* ➤*581* | *1.13* X-life ➤*565*	
					N	N	N	min^{-1}	min^{-1}	≈ kg		
15	35	11	10	11,75	17 700	14 400	1 770	28 500	13 400	0,056	**30202-XL**	–
	42	13	11	14,25	27 500	20 800	2 850	23 900	12 000	0,095	**30302-XL**	T2FB015
17	40	12	11	13,25	22 900	19 000	2 550	24 400	11 800	0,079	**30203-XL**	T2DB017
	40	16	14	17,25	34 500	30 000	4 400	23 500	10 700	0,107	**32203-XL**	T2DD017
	47	14	12	15,25	33 000	25 000	3 500	21 300	10 800	0,128	**30303-XL**	T2FB017
	47	19	16	20,25	36 500	36 000	4 150	17 200	10 300	0,175	**32303-A**	T2FD017
20	37	12	9	12	14 500	16 500	1 810	21 100	12 000	0,053	**32904**	T2BD020
	42	15	12	15	28 500	29 000	4 050	21 900	10 700	0,101	**32004-X-XL**	T3CC020
	45	14	10	14	22 200	21 100	2 300	17 500	10 700	0,103	**T4DB020**	T4DB020
	47	14	12	15,25	32 000	27 500	3 900	20 400	10 100	0,126	**30204-XL**	T2DB020
	47	18	15	19,25	39 000	37 000	5 700	19 400	9 500	0,17	**32204-B-XL**	T5DD020
	47	18	15	19,25	40 500	36 500	5 500	20 200	9 700	0,165	**32204-XL**	T2DD020
	50	22	18,5	22	46 000	49 000	5 900	15 400	9 400	0,23	**T2ED020**	T2ED020
	52	15	13	16,25	34 000	32 500	3 700	15 600	9 700	0,173	**30304-A**	T2FB020
	52	15	11	16,25	28 500	27 500	3 150	14 900	8 500	0,173	**31304**	–
	52	21	18	22,25	46 000	47 500	6 200	15 200	9 400	0,24	**32304-A**	T2FD020
22	40	12	9	12	16 000	18 100	1 960	19 300	10 700	0,065	**329/22**	T2BC022
	44	15	11,5	15	24 800	30 500	3 200	16 800	10 200	0,103	**320/22-X**	T3CC022
	47	14	10	14	23 300	22 800	2 490	16 600	10 000	0,109	**T4CB022**	T4CB022
	52	22	18,5	22	47 500	51 000	6 200	14 600	8 800	0,239	**T2ED022**	T2ED022
25	42	12	9	12	14 900	18 800	1 960	18 000	9 900	0,067	**32905**	T2BD025
	47	15	11,5	15	31 500	34 000	4 800	18 900	9 000	0,117	**32005-X-XL**	T4CC025
	47	17	14	17	33 000	41 500	4 750	15 700	9 400	0,139	**33005**	T2CE025
	50	14	10	14	24 200	24 600	2 700	15 300	9 200	0,121	**T4CB025**	T4CB025
	52	15	13	16,25	38 500	35 500	5 200	18 000	9 100	0,154	**30205-XL**	T3CC025
	52	18	15	19,25	44 500	46 000	7 100	17 100	8 100	0,195	**32205-B-XL**	T5CD025
	52	18	16	19,25	47 500	45 000	6 800	17 500	8 000	0,186	**32205-XL**	T2CD025
	52	22	18	22	48 500	58 000	7 100	14 200	8 300	0,223	**33205**	T2DE025
	58	26	21	26	61 000	69 000	8 700	12 900	8 200	0,349	**T2EE025**	T2EE025
	62	17	15	18,25	47 000	45 500	5 300	12 800	8 000	0,264	**30305-A**	T2FB025
	62	17	13	18,25	37 000	38 500	4 200	12 000	7 100	0,264	**31305-A**	T7FB025
	62	24	20	25,25	62 000	66 000	7 900	12 500	7 800	0,372	**32305-A**	T2FD025
	62	24	20	25,25	57 000	66 000	8 200	12 200	7 900	0,405	**32305-B**	–

medias *https://www.schaeffler.de/std/1F9A*

Dimensions					Mounting dimensions									Calculation factors		
d	r_1, r_2	r_3, r_4	a	d_1	d_a	d_b	D_a	D_a	D_b	C_a	C_b	r_a	r_b	e	Y	Y_0
	min.	min.	≈	≈	max.	min.	min.	max.	min.	min.	min.	max.	max.			
15	0,6	0,6	9	25,8	20	19	29	29	32	2	1,5	0,6	0,6	0,35	1,73	0,95
	1	1	10	28,7	22	21	36	36	38	2	3	1	1	0,29	2,11	1,16
17	1	1	10	29,5	23	23	34	34	37	2	2	1	1	0,35	1,74	0,96
	1	1	11	29,3	22	23	34	34	37	3	3	1	1	0,31	1,92	1,06
	1	1	11	32	25	23	40	41	42	2	3	1	1	0,29	2,11	1,16
	1	1	12	31,5	24	23	39	41	43	3	4	1	1	0,29	2,11	1,16
20	0,3	0,3	8	–	24	24	32	34	34	2	3	0,3	0,3	0,32	1,88	1,04
	0,6	0,6	10	33,1	25	25	36	37	39	3	3	0,6	0,6	0,37	1,6	0,88
	1	1	11	–	26	27	38	40	42	3	4	1	1	0,45	1,34	0,73
	1	1	12	34,7	27	26	40	41	43	2	3	1	1	0,35	1,74	0,96
	1	1	15	36,2	26	27	37	41	44	2	4	1	1	0,52	1,16	0,64
	1	1	13	33,9	26	26	39	41	43	3	4	1	1	0,33	1,81	1
	2	1,5	14	–	26	28	41	43	47	4	3	2	1,5	0,33	1,8	0,99
	1,5	1,5	12	36,1	28	27	44	45	47	2	3	1,5	1,5	0,3	2	1,1
	1,5	1,5	16	37,9	26	29	43	47	48	3	5	1,5	1,5	0,73	0,82	0,45
	1,5	1,5	14	35,25	27	27	43	45	47	3	4	1,5	1,5	0,3	2	1,1
22	0,3	0,3	9	–	26	26	35	37	37	2	3	0,3	0,3	0,32	1,88	1,04
	0,6	0,6	11	35,3	27	27	38	39	41	3	3,5	0,6	0,6	0,4	1,51	0,83
	1	1	12	–	28	29	40	42	44	3	4	1	1	0,47	1,27	0,7
	2	1,5	14	–	28	30	43	45	49	4	3,5	2	1,5	0,33	1,84	1,01
25	0,3	0,3	9	–	29	30	37	–	39	2	3	0,3	0,3	0,32	1,88	1,04
	0,6	0,6	12	38,5	30	30	40	42	44	3	3,5	0,6	0,6	0,43	1,39	0,77
	0,6	0,6	11	37,3	30	30	41	42	44	3	3	0,6	0,6	0,29	2,07	1,14
	1	1	13	–	30	32	43	45	47	3	4	1	1	0,51	1,18	0,65
	1	1	13	38,5	31	31	44	46	48	2	3	1	1	0,37	1,6	0,88
	1	1	16	41,3	30	31	41	46	49	3	4	1	1	0,58	1,03	0,57
	1	1	14	39,5	31	31	44	46	48	3	4	1	1	0,36	1,67	0,92
	1	1	14	39,6	30	31	43	46	49	4	4	1	1	0,35	1,71	0,94
	2	1,5	16	–	32	34	48	51	54	4	5	2	1,5	0,33	1,8	0,99
	1,5	1,5	13	42,3	34	32	54	55	57	2	3	1,5	1,5	0,3	2	1,1
	1,5	1,5	21	46,3	34	32	47	55	59	3	5	1,5	1,5	0,83	0,73	0,4
	1,5	1,5	16	42,3	33	32	53	55	57	3	5	1,5	1,5	0,3	2	1,1
	1,5	1,5	20	–	31	36	46	55	58	3	5	1,5	1,5	0,55	1,1	0,6

Tapered roller bearings

Single row to DIN/ISO

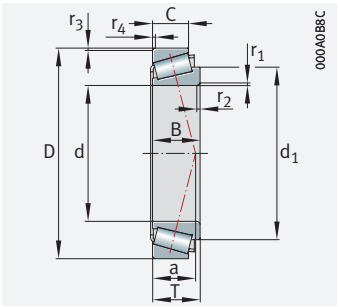

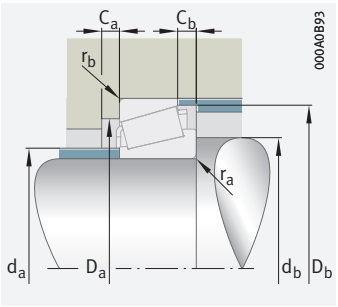

Mounting dimensions

d = 28 – 32 mm

Main dimensions					Basic load ratings		Fatigue limit load	Limiting speed	Speed rating	Mass	Designation	Interchange designation to ISO 10317 and ISO 355
d	D	B	C	T	dyn. C_r	stat. C_{0r}	C_{ur}	n_G	$n_{\vartheta r}$	m	➤*580* | *1.12* ➤*581* | *1.13* X-life ➤*565*	
					N	N	N	min^{-1}	min^{-1}	≈ kg		
28	45	12	9	12	15 800	20 900	2 180	16 700	8 900	0,073	**329/28**	T2BD028
	52	16	12	16	34 000	40 500	4 600	14 200	8 400	0,146	**320/28-X**	T4CC028
	55	14,5	11	15	30 000	31 000	3 450	13 900	8 400	0,151	**T4CB028**	T4CB028
	58	19	16	20,25	42 000	49 500	5 700	12 800	7 600	0,249	**322/28-B**	T5DD028
	58	24	19	24	57 000	66 000	8 200	12 700	7 700	0,296	**332/28**	–
	65	27	22	27	71 000	78 000	9 600	11 600	7 500	0,451	**T2ED028**	T2ED028
	68	18	16	19,75	53 000	51 000	5 900	11 200	7 800	0,342	**303/28**	–
30	47	12	9	12	18 700	24 900	2 750	16 000	8 200	0,075	**32906**	T2BD030
	55	17	13	17	46 000	47 000	7 100	16 100	7 900	0,173	**32006-X-XL**	T4CC030
	55	20	16	20	53 000	57 000	9 000	15 900	8 300	0,212	**33006-XL**	T2CE030
	60	16,5	12,5	17	38 000	38 500	4 600	12 600	8 000	0,207	**T4CB030**	T4CB030
	62	16	14	17,25	52 000	48 500	7 000	12 400	7 400	0,24	**30206-XL**	T3DB030
	62	20	17	21,25	62 000	65 000	9 900	14 200	6 700	0,28	**32206-B-XL**	T5DC030
	62	20	17	21,25	63 000	62 000	9 900	14 600	6 800	0,292	**32206-XL**	T3DC030
	62	25	19,5	25	77 000	78 000	12 600	14 300	7 000	0,355	**33206-XL**	T2DE030
	68	29	24	29	80 000	93 000	11 800	10 900	7 100	0,534	**T2EE030**	T2EE030
	72	19	16	20,75	71 000	61 000	9 300	13 300	7 100	0,402	**30306-XL**	T2FB030
	72	19	14	20,75	45 000	46 500	5 400	10 300	6 400	0,393	**31306-A**	T7FB030
	72	27	23	28,75	80 000	89 000	11 000	10 700	7 000	0,587	**32306-A**	T2FD030
	72	27	23	28,75	73 000	87 000	10 700	10 400	7 100	0,6	**32306-B**	T5FD030
32	52	15	10	14	24 200	30 500	3 100	14 300	7 900	0,114	**329/32**	T2BD032
	58	17	13	17	39 000	48 500	5 700	12 600	7 500	0,19	**320/32-X**	T4CC032
	65	17,5	13,5	18	43 500	45 000	5 400	11 700	7 500	0,262	**T4DB032**	T4DB032
	65	17	15	18,25	49 000	50 000	5 800	12 000	7 600	0,28	**302/32**	T3DB032
	65	26	20,5	26	71 000	85 000	10 700	11 200	6 800	0,41	**332/32**	T2DE032
	72	29	24	29	87 000	100 000	12 500	10 400	6 700	0,594	**T2ED032**	T2ED032

medias *https://www.schaeffler.de/std/1F9A*

Dimensions					Mounting dimensions									Calculation factors		
d	r_1, r_2	r_3, r_4	a	d_1	d_a	d_b	D_a	D_a	D_b	C_a	C_b	r_a	r_b	e	Y	Y_0
	min.	min.	≈	≈	max.	min.	min.	max.	min.	min.	min.	max.	max.			
28	0,3	0,3	9	–	32	32	41	41	42	2	3	0,3	0,3	0,32	1,88	1,04
	1	1	13	41	33	34	45	46	49	3	4	1	1	0,43	1,39	0,77
	1	1	13	–	34	35	48	49	52	3	4	1	1	0,47	1,27	0,7
	1	1	17	44,9	33	34	46	55	52	3	4	1	1	0,56	1,07	0,59
	1	1	15	43,9	33	34	49	52	55	4	5	1	1	0,34	1,77	0,97
	2	2	18	–	35	37	54	57	61	5	5	2	2	0,34	1,77	0,97
	1,5	1,5	14	46,5	38	35	59	61	62	3	3,5	1,5	1,5	0,3	2	1,1
30	0,3	0,3	9	39,5	34	34	43	43	44	2	3	0,3	0,3	0,32	1,88	1,04
	1	1	14	43,9	35	36	48	49	52	3	4	1	1	0,43	1,39	0,77
	1	1	13	43,8	35	36	48	49	52	3	4	1	1	0,29	2,06	1,13
	1	1	15	–	36	37	52	54	57	3	4,5	1	1	0,47	1,27	0,7
	1	1	14	46,2	37	36	53	56	57	2	3	1	1	0,37	1,6	0,88
	1	1	18	48,5	36	36	50	56	60	3	4	1	1	0,56	1,07	0,59
	1	1	16	46,8	37	36	52	56	59	3	4	1	1	0,37	1,6	0,88
	1	1	16	47	36	36	53	56	59	5	5,5	1	1	0,34	1,76	0,97
	2	2	19	–	37	40	56	60	64	5	5	2	2	0,33	1,81	1
	1,5	1,5	15	49,3	40	37	62	65	66	3	4,5	1,5	1,5	0,32	1,9	1,05
	1,5	1,5	24	54	40	37	55	65	68	3	6,5	1,5	1,5	0,83	0,73	0,4
	1,5	1,5	18	49,3	39	37	59	65	66	4	5,5	1,5	1,5	0,32	1,9	1,05
	1,5	1,5	23	53,2	38	37	59	65	67	4	5,5	1,5	1,5	0,55	1,1	0,6
32	0,6	0,6	10	–	36	37	47	48	49	3	3	0,6	0,6	0,32	1,88	1,04
	1	1	14	46,5	38	38	50	52	55	3	4	1	1	0,45	1,32	0,73
	1	1	16	–	39	40	56	59	61	3	4,5	1	1	0,47	1,27	0,7
	1	1	14	46,7	39	38	56	59	60	3	3	1	1	0,37	1,6	0,88
	1	1	17	–	38	38	55	59	62	4	5,5	1	1	0,35	1,73	0,95
	2	2	19	–	40	42	60	64	67	5	5	2	2	0,34	1,78	0,98

Tapered roller bearings

Single row to DIN/ISO

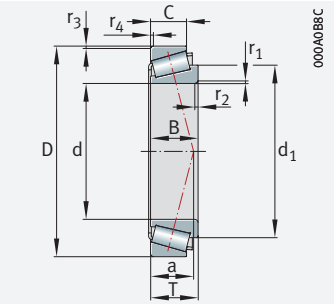

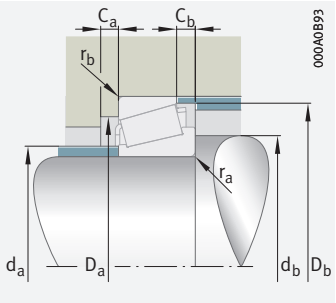

Mounting dimensions

d = 35 – 42 mm

Main dimensions					Basic load ratings		Fatigue limit load	Limiting speed	Speed rating	Mass	Designation	Interchange designation to ISO 10317 and ISO 355
d	D	B	C	T	dyn. C_r	stat. C_{0r}	C_{ur}	n_G	$n_{\vartheta r}$	m	➤*580*|*1.12* ➤*581*|*1.13* X-life ➤*565*	
					N	N	N	min^{-1}	min^{-1}	≈ kg		
35	55	14	11,5	14	27 500	38 000	3 950	13 200	7 000	0,127	**32907**	T2BD035
	62	18	14	18	54 000	57 000	9 000	14 000	7 000	0,228	**32007-X-XL**	T4CC035
	62	21	17	21	53 000	70 000	8 700	11 500	7 200	0,273	**33007**	T2CE035
	70	18	14	19	51 000	55 000	6 600	10 800	6 900	0,317	**T4DB035**	T4DB035
	72	17	15	18,25	64 000	59 000	9 100	12 900	6 400	0,333	**30207-XL**	T3DB035
	72	23	19	24,25	75 000	80 000	12 800	12 200	6 200	0,464	**32207-B-XL**	T5DC035
	72	23	19	24,25	84 000	85 000	13 700	12 500	6 000	0,449	**32207-XL**	T3DC035
	72	28	22	28	103 000	105 000	17 100	12 300	6 200	0,53	**33207-XL**	T2DE035
	78	32,5	27	33	106 000	120 000	15 000	9 400	6 400	0,777	**T2EE035**	T2EE035
	80	21	18	22,75	73 000	75 000	8 800	9 700	6 500	0,53	**30307-A**	T2FB035
	80	21	15	22,75	60 000	64 000	7 600	9 100	5 700	0,51	**31307-A**	T7FB035
	80	31	25	32,75	100 000	113 000	13 800	9 400	6 500	0,76	**32307-A**	T2FE035
	80	31	25	32,75	95 000	116 000	14 600	9 100	6 400	0,8	**32307-B**	T5FE035
38	65	18	14	18	49 000	64 000	7 700	11 100	6 400	0,252	**320/38-X**	–
40	62	15	12	15	32 500	46 000	5 100	11 700	6 200	0,162	**32908**	T2BC040
	68	19	14,5	19	63 000	71 000	11 200	12 800	6 200	0,279	**32008-X-XL**	T3CD040
	68	22	18	22	62 000	87 000	10 800	10 400	6 300	0,34	**33008**	T2BE040
	75	18	14	19	53 000	59 000	7 100	9 900	6 300	0,345	**T4CB040**	T4CB040
	75	26	20,5	26	93 000	104 000	17 200	11 500	5 500	0,517	**33108-XL**	T2CE040
	80	18	16	19,75	73 000	67 000	10 300	11 600	5 900	0,432	**30208-XL**	T3DB040
	80	23	19	24,75	87 000	88 000	14 200	11 000	5 500	0,57	**32208-B-XL**	T5DC040
	80	23	19	24,75	94 000	94 000	15 000	11 200	5 300	0,55	**32208-XL**	T3DC040
	80	32	25	32	105 000	134 000	16 900	9 000	5 700	0,74	**33208**	T2DE040
	85	32,5	28	33	114 000	139 000	17 400	8 600	5 700	0,88	**T2EE040**	T2EE040
	90	23	20	25,25	91 000	102 000	12 000	8 500	5 700	0,75	**30308-A**	T2FB040
	90	23	17	25,25	89 000	83 000	12 400	9 600	5 100	0,72	**31308-XL**	T7FB040
	90	33	27	35,25	142 000	149 000	24 200	9 700	5 600	1,08	**32308-B-XL**	T5FD040
	90	33	27	35,25	143 000	148 000	23 900	10 100	5 700	1,07	**32308-XL**	T2FD040
42	72	20	15,5	20	59 000	82 000	9 800	9 400	5 800	0,345	**320/42-X**	–

medias *https://www.schaeffler.de/std/1F9A*

Dimensions					Mounting dimensions									Calculation factors		
d	r_1, r_2	r_3, r_4	a	d_1	d_a	d_b	D_a	D_a	D_b	C_a	C_b	r_a	r_b	e	Y	Y_0
	min.	min.	≈	≈	max.	min.	min.	max.	min.	min.	min.	max.	max.			
35	0,6	0,6	11	–	40	40	50	50	52	3	3	0,6	0,6	0,29	2,06	1,13
	1	1	15	50,1	40	41	54	56	59	4	4	1	1	0,45	1,32	0,73
	1	1	14	–	41	41	55	56	59	4	4	1	1	0,31	1,97	1,08
	1	1	16	–	43	43	61	64	66	4	5	1	1	0,45	1,32	0,73
	1,5	1,5	15	53,4	44	42	62	65	67	3	3	1,5	1,5	0,37	1,6	0,88
	1,5	1,5	22	56	42	42	56	65	68	3	5	1,5	1,5	0,58	1,03	0,57
	1,5	1,5	18	53,9	43	42	61	65	67	3	5,5	1,5	1,5	0,37	1,6	0,88
	1,5	1,5	19	53,9	42	42	61	65	68	5	6	1,5	1,5	0,35	1,7	0,93
	2,5	2	21	–	43	45	65	70	74	6	6	2,5	2	0,32	1,85	1,02
	2	1,5	16	55,7	45	44	70	71	74	3	4,5	2	1,5	0,32	1,9	1,05
	2	1,5	26	59,9	44	44	62	71	76	4	7,5	2	1,5	0,83	0,73	0,4
	2	1,5	20	56,1	44	44	66	71	74	4	7,5	2	1,5	0,32	1,9	1,05
	2	1,5	25	59,8	42	44	61	71	76	4	7,5	2	1,5	0,55	1,1	0,6
38	1	1	14	–	43	44	58	59	62	4	4	1	1	0,37	1,6	0,88
40	0,6	0,6	12	52,1	45	45	57	57	59	3	3	0,6	0,6	0,29	2,07	1,14
	1	1	15	55,2	46	46	60	62	65	4	4,5	1	1	0,38	1,58	0,87
	1	1	15	–	46	46	61	62	65	4	4	1	1	0,28	2,12	1,17
	1	1	18	–	47	48	65	69	71	4	5	1	1	0,49	1,22	0,67
	1,5	1,5	18	59,2	47	47	65	68	71	4	5,5	1,5	1,5	0,36	1,69	0,93
	1,5	1,5	17	59	49	47	69	73	74	3	3,5	1,5	1,5	0,37	1,6	0,88
	1,5	1,5	22	61,1	48	47	65	73	76	4	5,5	1,5	1,5	0,55	1,1	0,6
	1,5	1,5	19	60	48	47	68	73	75	3	5,5	1,5	1,5	0,37	1,6	0,88
	1,5	1,5	21	60,7	47	47	67	73	76	5	7	1,5	1,5	0,36	1,68	0,92
	2,5	2	22	61,9	48	51	70	75	80	6	5	2,5	2	0,34	1,74	0,96
	2	1,5	19	63,3	52	49	77	81	82	3	5	2	1,5	0,35	1,74	0,96
	2	1,5	30	67,7	51	49	71	81	86	4	8	2	1,5	0,83	0,73	0,4
	2	1,5	28	67,3	50	49	69	81	85	4	8	2	1,5	0,55	1,1	0,6
	2	1,5	23	64,2	50	49	73	81	82	4	8	2	1,5	0,35	1,74	0,96
42	1	1	16	58,32	48	48	64	66	69	4	4,5	1	1	0,37	1,6	0,88

Tapered roller bearings

Single row to DIN/ISO

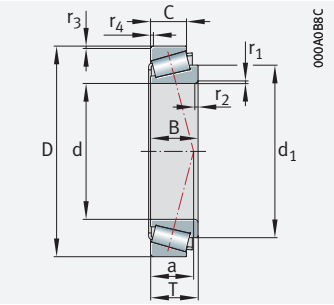

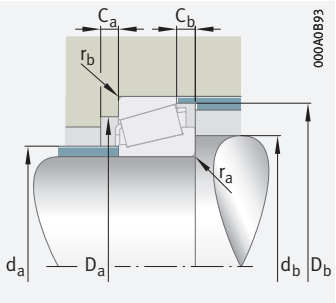

Mounting dimensions

d = 45 – 50 mm

Main dimensions					Basic load ratings		Fatigue limit load	Limiting speed	Speed rating	Mass	Designation	Interchange designation to ISO 10317 and ISO 355
d	D	B	C	T	dyn. C_r	stat. C_{0r}	C_{ur}	n_G	$n_{\vartheta r}$	m	➤*580* | *1.12* ➤*581* | *1.13* X-life ➤*565*	
					N	N	N	min^{-1}	min^{-1}	≈ kg		
45	68	15	12	15	34 500	52 000	5 800	10 600	5 500	0,196	**32909**	T2BC045
	75	20	15,5	20	72 000	86 000	13 500	11 400	5 400	0,354	**32009-X-XL**	T3CC045
	75	24	19	24	85 000	104 000	16 800	11 300	5 900	0,432	**33009-XL**	T2CE045
	80	26	20,5	26	84 000	115 000	14 700	8 800	4 950	0,55	**33109**	T3CE045
	85	19	16	20,75	84 000	83 000	12 900	10 600	5 400	0,488	**30209-XL**	T3DB045
	85	20	15,5	21	69 000	77 000	9 400	8 700	5 600	0,497	**T4DB045**	T4DB045
	85	23	19	24,75	93 000	99 000	15 900	10 100	4 950	0,62	**32209-B-XL**	T5DC045
	85	23	19	24,75	97 000	100 000	16 100	10 300	4 850	0,59	**32209-XL**	T3DC045
	85	32	25	32	107 000	146 000	18 700	8 200	5 200	0,8	**33209**	T3DE045
	90	31	26	32	105 000	141 000	18 200	7 900	5 200	0,967	**T5ED045**	T5ED045
	95	26,5	20	29	105 000	109 000	16 900	8 900	6 100	0,92	**T7FC045-XL**	T7FC045
	95	35	30	36	143 000	175 000	22 000	7 700	5 100	1,19	**T2ED045**	T2ED045
	100	25	22	27,25	111 000	125 000	15 100	7 600	5 100	1	**30309-A**	T2FB045
	100	25	18	27,25	114 000	108 000	16 400	8 600	4 650	0,97	**31309-XL**	T7FB045
	100	36	30	38,25	154 000	193 000	24 400	7 300	4 900	1,43	**32309-A**	T2FD045
	100	36	30	38,25	144 000	187 000	23 600	7 200	5 100	1,46	**32309-BA**	T5FD045
50	72	15	12	15	35 500	55 000	6 200	9 900	5 100	0,2	**32910**	T2BC050
	80	20	15,5	20	75 000	94 000	14 900	10 500	4 950	0,385	**32010-X-XL**	T3CC050
	80	24	19	24	89 000	114 000	18 600	10 500	5 300	0,454	**33010-XL**	T2CE050
	85	26	20	26	86 000	122 000	15 300	8 200	4 600	0,59	**33110**	T3CE050
	90	20	15,5	21	71 000	82 000	10 000	8 100	5 200	0,534	**T4DB050**	T4DB050
	90	20	17	21,75	94 000	97 000	15 100	9 900	5 000	0,56	**30210-XL**	T3DB050
	90	23	19	24,75	98 000	102 000	16 200	9 500	4 600	0,66	**32210-B-XL**	T5DC050
	90	23	19	24,75	104 000	110 000	17 700	9 700	4 500	0,64	**32210-XL**	T3DC050
	90	32	24,5	32	136 000	163 000	27 000	9 300	4 700	0,87	**33210-XL**	T3DE050
	100	35	30	36	150 000	188 000	23 900	7 200	4 750	1,266	**T2ED050**	T2ED050
	100	34,5	29	36	131 000	183 000	23 600	7 000	4 750	1,35	**T5ED050**	T5ED050
	105	29	22	32	127 000	135 000	21 000	8 000	5 600	1,23	**T7FC050-XL**	T7FC050
	110	27	23	29,25	155 000	150 000	23 400	8 300	4 700	1,26	**30310-XL**	T2FB050
	110	27	19	29,25	131 000	125 000	18 900	7 100	4 300	1,24	**31310-XL**	T7FB050
	110	40	33	42,25	187 000	237 000	30 000	6 600	4 550	1,91	**32310-A**	T2FD050
	110	40	33	42,25	165 000	223 000	28 000	6 500	4 800	1,95	**32310-B**	T5FD050

medias *https://www.schaeffler.de/std/1F9A*

Dimensions					Mounting dimensions									Calculation factors		
d	r_1, r_2	r_3, r_4	a	d_1	d_a	d_b	D_a	D_a	D_b	C_a	C_b	r_a	r_b	e	Y	Y_0
	min.	min.	≈	≈	max.	min.	min.	max.	min.	min.	min.	max.	max.			
45	0,6	0,6	12	57,8	51	50	62	63	64	3	3	0,6	0,6	0,32	1,88	1,04
	1	1	17	62,2	51	51	67	69	72	4	4,5	1	1	0,39	1,53	0,84
	1	1	17	61,8	51	51	67	69	71	4	5	1	1	0,29	2,04	1,12
	1,5	1,5	19	63,8	52	52	69	73	77	4	5,5	1,5	1,5	0,38	1,57	0,86
	1,5	1,5	18	64,8	54	52	74	78	80	3	4,5	1,5	1,5	0,4	1,48	0,81
	2	2	19	–	53	54	74	77	80	5	5,5	2	2	0,46	1,31	0,72
	1,5	1,5	24	66,8	53	52	70	78	82	4	5,5	1,5	1,5	0,59	1,01	0,56
	1,5	1,5	20	65,6	53	52	73	78	80	3	5,5	1,5	1,5	0,4	1,48	0,81
	1,5	1,5	22	66,2	52	52	72	78	81	5	7	1,5	1,5	0,39	1,56	0,86
	4	2	27	–	52	57	70	82	86	5	6	4	2	0,55	1,1	0,6
	2,5	2,5	33	73,5	53	59	71	83	91	5	9	2,5	2,5	0,87	0,69	0,38
	2,5	2,5	24	68,8	54	56	80	83	89	6	6	2,5	2,5	0,32	1,86	1,02
	2	1,5	21	70,65	59	54	86	91	92	3	5	2	1,5	0,35	1,74	0,96
	2	1,5	32	74,7	56	54	79	91	95	4	9	2	1,5	0,83	0,73	0,4
	2	1,5	26	71,1	56	54	82	91	93	4	8	2	1,5	0,35	1,74	0,96
	2	1,5	30	74,2	55	54	76	91	94	5	8	2	1,5	0,55	1,1	0,6
50	0,6	0,6	14	62,2	55	55	66	67	69	3	3	0,6	0,6	0,34	1,76	0,97
	1	1	18	67,3	56	56	72	74	77	4	4,5	1	1	0,42	1,42	0,78
	1	1	18	66,5	56	56	72	74	76	4	5	1	1	0,32	1,9	1,04
	1,5	1,5	21	69,1	56	57	74	78	82	4	6	1,5	1,5	0,41	1,46	0,8
	2	2	21	–	58	59	79	82	85	4	5,5	2	2	0,49	1,23	0,67
	1,5	1,5	20	69,7	58	57	79	83	85	3	4,5	1,5	1,5	0,42	1,43	0,79
	1,5	1,5	25	71,2	57	57	76	83	87	4	6,5	1,5	1,5	0,59	1,02	0,56
	1,5	1,5	22	70	58	57	78	83	85	3	5,5	1,5	1,5	0,42	1,43	0,79
	1,5	1,5	23	72,5	57	57	77	83	87	5	7,5	1,5	1,5	0,41	1,45	0,8
	2,5	2,5	25	73,9	59	61	84	90	94	6	6	2,5	2,5	0,34	1,75	0,96
	4	2	30	–	59	64	78	91	95	5	7	4	2	0,53	1,13	0,62
	3	3	36	81,1	59	65	78	91	100	5	10	3	3	0,87	0,69	0,38
	2,5	2	23	78,4	65	60	95	100	102	4	6	2,5	2	0,35	1,74	0,96
	2,5	2	35	81,7	62	60	87	100	104	4	10	2,5	2	0,83	0,73	0,4
	2,5	2	29	78,35	62	60	90	100	102	5	9	2,5	2	0,35	1,74	0,96
	2,5	2	33	82,3	60	60	83	100	103	5	9	2,5	2	0,55	1,1	0,6

Tapered roller bearings

Single row to DIN/ISO

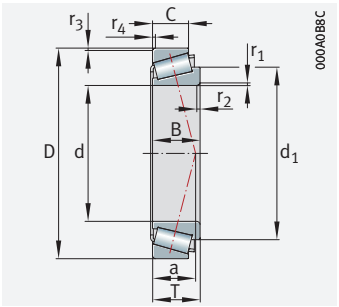

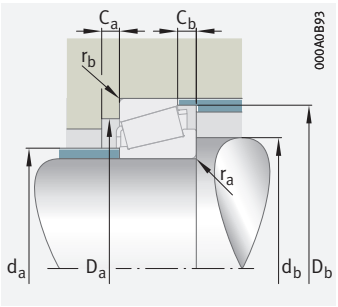

Mounting dimensions

d = 55 – 60 mm

Main dimensions					Basic load ratings		Fatigue limit load	Limiting speed	Speed rating	Mass	Designation	Interchange designation to ISO 10317 and ISO 355
d	D	B	C	T	dyn. C_r	stat. C_{0r}	C_{ur}	n_G	$n_{\vartheta r}$	m	➤*580* | *1.12* ➤*581* | *1.13* X-life ➤*565*	
					N	N	N	min^{-1}	min^{-1}	≈ kg		
55	80	17	14	17	45 500	75 000	9 000	8 900	4 700	0,304	**32911**	T2BC055
	90	23	17,5	23	96 000	118 000	19 400	9 300	4 600	0,56	**32011-X-XL**	T3CC055
	90	27	21	27	111 000	143 000	23 900	9 300	4 850	0,67	**33011-XL**	T2CE055
	95	20	15,5	21	73 000	88 000	10 800	7 600	4 700	0,575	**T4CB055**	T4CB055
	95	30	23	30	135 000	164 000	27 000	8 800	4 250	0,88	**33111-XL**	T3CE055
	100	21	18	22,75	109 000	109 000	16 500	8 900	4 600	0,72	**30211-XL**	T3DB055
	100	25	19	26,75	124 000	130 000	20 500	8 600	4 150	0,88	**32211-B-XL**	–
	100	25	21	26,75	130 000	137 000	21 600	8 700	4 100	0,87	**32211-XL**	T3DC055
	100	35	27	35	164 000	194 000	32 500	8 400	4 350	1,19	**33211-XL**	T3DE055
	105	34,5	29	36	135 000	193 000	25 000	6 600	4 450	1,43	**T5ED055**	T5ED055
	110	39	32	39	176 000	226 000	23 400	6 300	4 300	1,7	**T2ED055**	T2ED055
	115	31	23,5	34	152 000	165 000	26 000	7 200	5 000	1,59	**T7FC055-XL**	T7FC055
	120	29	25	31,5	180 000	175 000	27 500	7 500	4 350	1,64	**30311-XL**	T2FB055
	120	29	21	31,5	145 000	139 000	21 000	6 500	4 100	1,57	**31311-XL**	T7FB055
	120	43	35	45,5	211 000	270 000	34 000	6 100	4 350	2,38	**32311-A**	T2FD055
	120	43	35	45,5	194 000	265 000	34 000	5 900	4 450	2,48	**32311-B**	T5FD055
60	85	17	14	17	49 000	85 000	10 100	8 300	4 250	0,315	**32912**	T2BC060
	95	23	17,5	23	97 000	124 000	20 100	8 800	4 350	0,61	**32012-X-XL**	T4CC060
	95	27	21	27	113 000	149 000	25 000	8 800	4 650	0,71	**33012-XL**	T2CE060
	100	20	15,5	21	75 000	93 000	11 400	7 200	4 400	0,597	**T4CB060**	T4CB060
	100	30	23	30	138 000	172 000	28 500	8 300	3 950	0,93	**33112-XL**	T3CE060
	110	22	19	23,75	122 000	123 000	18 700	8 200	4 250	0,92	**30212-XL**	T3EB060
	110	28	21	29,75	151 000	162 000	26 000	7 700	3 900	1,19	**32212-B-XL**	–
	110	28	24	29,75	158 000	171 000	27 500	8 000	3 850	1,18	**32212-XL**	T3EC060
	110	38	29	38	169 000	237 000	30 500	6 300	4 050	1,55	**33212**	T3EE060
	115	38	31	39	156 000	223 000	28 500	6 000	4 150	1,85	**T5ED060**	T5ED060
	115	39	33	40	189 000	250 000	32 000	6 100	4 050	1,83	**T2EE060**	T2EE060
	125	33,5	26	37	181 000	200 000	32 000	6 700	4 700	2,02	**T7FC060-XL**	T7FC060
	130	31	26	33,5	208 000	204 000	32 000	6 900	4 050	2,02	**30312-XL**	T2FB060
	130	31	22	33,5	173 000	169 000	26 000	6 600	3 800	1,96	**31312-XL**	T7FB060
	130	46	37	48,5	220 000	300 000	38 500	5 400	4 150	3,06	**32312-BA**	T5FD060
	130	46	37	48,5	285 000	310 000	52 000	6 700	4 050	2,97	**32312-XL**	T2FD060

medias *https://www.schaeffler.de/std/1F9A*

Dimensions					Mounting dimensions									Calculation factors		
d	r_1, r_2	r_3, r_4	a	d_1	d_a	d_b	D_a	D_a	D_b	C_a	C_b	r_a	r_b	e	Y	Y_0
	min.	min.	≈	≈	max.	min.	min.	max.	min.	min.	min.	max.	max.			
55	1	1	15	68,8	61	61	73	74	76	4	3	1	1	0,31	1,94	1,07
	1,5	1,5	20	75,1	63	62	81	83	86	4	5,5	1,5	1,5	0,41	1,48	0,81
	1,5	1,5	19	74,4	63	62	81	83	86	5	6	1,5	1,5	0,31	1,92	1,06
	2	2	20	–	64	65	85	87	90	5	5,5	2	2	0,45	1,35	0,74
	1,5	1,5	22	76,6	62	62	83	88	91	5	7	1,5	1,5	0,37	1,6	0,88
	2	1,5	21	76	64	64	88	91	94	4	4,5	2	1,5	0,4	1,48	0,81
	2	1,5	26	78	61	64	85	91	96	4	7,5	2	1,5	0,57	1,05	0,58
	2	1,5	23	76,7	63	64	87	91	95	4	5,5	2	1,5	0,4	1,48	0,81
	2	1,5	26	79,4	62	64	85	91	96	6	8	2	1,5	0,4	1,5	0,83
	4	2,5	31	–	63	69	82	95	100	5	7	4	2,5	0,56	1,07	0,59
	2,5	2,5	27	81,5	65	68	93	100	104	7	7	2,5	2,5	0,35	1,73	0,95
	3	3	40	88,8	65	72	86	101	109	5	10,5	3	3	0,87	0,69	0,38
	2,5	2	25	85,4	71	65	104	110	111	4	6,5	2,5	2	0,35	1,74	0,96
	2,5	2	39	88,5	68	65	94	110	113	4	10,5	2,5	2	0,83	0,73	0,4
	2,5	2	30	85	68	65	99	110	111	5	10,5	2,5	2	0,35	1,74	0,96
	2,5	2	36	89,6	65	65	91	110	112	5	10,5	2,5	2	0,55	1,1	0,6
60	1	1	16	73,8	66	66	78	79	81	4	3	1	1	0,33	1,81	1
	1,5	1,5	21	79,6	67	67	85	88	91	4	5,5	1,5	1,5	0,43	1,39	0,77
	1,5	1,5	20	78,5	67	67	85	88	90	5	6	1,5	1,5	0,33	1,83	1,01
	2	2	22	79,9	68	70	89	92	95	4	5,5	2	2	0,47	1,27	0,7
	1,5	1,5	24	81,3	67	67	88	93	96	5	7	1,5	1,5	0,4	1,51	0,83
	2	1,5	22	82,4	70	69	96	101	103	4	4,5	2	1,5	0,41	1,48	0,81
	2	1,5	29	85,6	69	69	92	104	105	5	8,5	2	1,5	0,57	1,05	0,58
	2	1,5	25	83,2	69	69	95	101	104	4	5,5	2	1,5	0,4	1,48	0,81
	2	1,5	28	86,2	69	69	93	101	105	6	9	2	1,5	0,4	1,48	0,82
	4	2,5	33	90,9	69	76	91	103	110	6	8	4	2,5	0,53	1,13	0,62
	2,5	2,5	28	86,3	69	73	98	105	109	7	7	2,5	2,5	0,33	1,8	0,99
	3	3	42	95,8	71	78	94	111	119	6	11	3	3	0,82	0,73	0,4
	3	2,5	26	92,2	77	72	112	118	120	5	7,5	3	2,5	0,35	1,74	0,96
	3	2,5	41	96,2	73	72	103	118	123	5	11,5	3	2,5	0,83	0,73	0,4
	3	2,5	39	97	71	72	100	118	122	6	11,5	3	2,5	0,55	1,1	0,6
	3	2,5	32	92,5	74	72	107	118	120	6	11,5	3	2,5	0,35	1,74	0,96

Tapered roller bearings

Single row to DIN/ISO

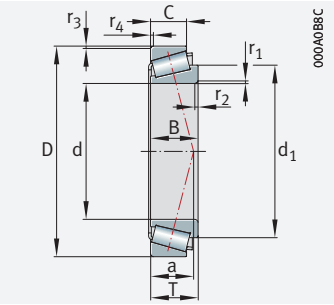

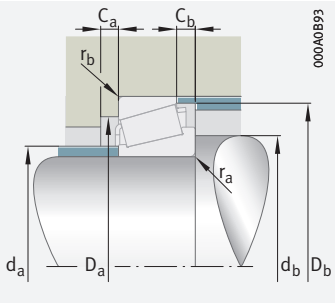

Mounting dimensions

d = 65 – 70 mm

Main dimensions					Basic load ratings		Fatigue limit load	Limiting speed	Speed rating	Mass	Designation	Interchange designation to ISO 10317 and ISO 355
d	D	B	C	T	dyn. C_r	stat. C_{0r}	C_{ur}	n_G	$n_{\vartheta r}$	m	➤*580* | *1.12* ➤*581* | *1.13* X-life ➤*565*	
					N	N	N	min^{-1}	min^{-1}	≈ kg		
65	90	17	14	17	49 500	88 000	10 400	7 800	4 000	0,323	**32913**	T2BC065
	100	23	17,5	23	97 000	125 000	20 800	8 300	4 150	0,64	**32013-X-XL**	T4CC065
	100	27	21	27	118 000	161 000	27 000	8 300	4 300	0,76	**33013-XL**	T2CE065
	105	20	15,5	21	80 000	102 000	12 500	6 800	4 100	0,65	**T4CB065**	T4CB065
	110	34	26,5	34	177 000	226 000	37 500	6 800	3 650	1,31	**33113-XL**	T3DE065
	120	23	20	24,75	142 000	143 000	22 000	7 400	3 850	1,16	**30213-XL**	T3EB065
	120	31	23	32,75	174 000	185 000	29 500	7 100	3 750	1,53	**32213-B-XL**	–
	120	31	27	32,75	185 000	202 000	32 500	7 200	3 600	1,55	**32213-XL**	T3EC065
	120	38	31	39	161 000	235 000	30 000	5 700	3 950	1,94	**T5ED065**	T5ED065
	120	41	32	41	242 000	285 000	47 500	6 900	3 750	2,04	**33213-XL**	T3EE065
	130	33,5	26	37	186 000	211 000	33 500	6 300	4 450	2,15	**T7FC065-XL**	T7FC065
	140	33	28	36	196 000	228 000	27 500	5 300	3 850	2,48	**30313-A**	T2GB065
	140	33	23	36	193 000	188 000	29 000	6 100	3 650	2,35	**31313-XL**	T7GB065
	140	48	39	51	248 000	340 000	44 000	5 000	3 850	3,68	**32313-BA**	T5GD065
	140	48	39	51	320 000	350 000	57 000	6 200	3 750	3,6	**32313-XL**	T2GD065
70	100	20	16	20	85 000	116 000	18 700	8 400	3 800	0,5	**32914-XL**	T2BC070
	110	20	15,5	21	82 000	108 000	13 000	6 500	3 800	0,68	**T4CB070**	T4CB070
	110	25	19	25	123 000	159 000	26 500	7 600	3 800	0,88	**32014-X-XL**	T4CC070
	110	31	25,5	31	136 000	223 000	29 500	6 200	3 850	1,11	**33014**	T2CE070
	120	37	29	37	174 000	260 000	33 500	5 700	3 500	1,71	**33114**	T3DE070
	125	24	21	26,25	155 000	162 000	25 000	7 100	3 700	1,29	**30214-XL**	T3EB070
	125	31	23,5	33,25	179 000	196 000	31 500	6 700	3 550	1,64	**32214-B-XL**	–
	125	31	27	33,25	194 000	216 000	34 500	6 200	3 450	1,65	**32214-XL**	T3EC070
	125	41	32	41	249 000	300 000	50 000	6 600	3 550	2,14	**33214-XL**	T3EE070
	130	40	34	42	195 000	295 000	38 000	5 200	3 550	2,51	**T5ED070**	T5ED070
	130	42	35	43	225 000	310 000	40 000	5 300	3 550	2,52	**T2ED070**	T2ED070
	140	35,5	27	39	208 000	237 000	38 000	5 800	4 150	2,62	**T7FC070-XL**	T7FC070
	150	35	30	38	223 000	260 000	31 500	4 900	3 650	3,031	**30314-A**	T2GB070
	150	35	25	38	221 000	219 000	33 500	5 700	3 450	2,9	**31314-XL**	T7GB070
	150	51	42	54	285 000	395 000	49 500	4 650	3 600	4,53	**32314-BA**	T5GD070
	150	51	42	54	370 000	410 000	66 000	5 800	3 500	4,39	**32314-XL**	T2GD070

medias *https://www.schaeffler.de/std/1F9A*

Dimensions					Mounting dimensions									Calculation factors		
d	r_1, r_2	r_3, r_4	a	d_1	d_a	d_b	D_a	D_a	D_b	C_a	C_b	r_a	r_b	e	Y	Y_0
	min.	min.	≈	≈	max.	min.	min.	max.	min.	min.	min.	max.	max.			
65	1	1	17	79	71	71	83	84	86	4	3	1	1	0,35	1,7	0,93
	1,5	1,5	23	85,1	72	72	90	93	97	4	5,5	1,5	1,5	0,46	1,31	0,72
	1,5	1,5	21	83,9	72	72	89	93	96	5	6	1,5	1,5	0,35	1,72	0,95
	2	2	24	–	73	75	94	97	100	4	5,5	2	2	0,5	1,2	0,66
	1,5	1,5	26	89,5	73	72	96	103	106	6	7,5	1,5	1,5	0,39	1,55	0,85
	2	1,5	23	90,6	77	74	106	111	113	4	4,5	2	1,5	0,4	1,48	0,81
	2	1,5	31	92,1	74	74	101	111	114	5	9,5	2	1,5	0,56	1,07	0,59
	2	1,5	27	92	76	74	104	111	115	4	5,5	2	1,5	0,4	1,48	0,81
	4	2,5	35	95,85	74	80	95	108	115	6	8	4	2,5	0,56	1,07	0,59
	2	1,5	30	93,1	74	74	102	111	115	6	9	2	1,5	0,39	1,54	0,85
	3	3	45	101	75	83	98	116	124	5	11	3	3	0,87	0,69	0,38
	3	2,5	29	99,6	83	77	122	128	130	5	8	3	2,5	0,35	1,74	0,96
	3	2,5	44	103,5	79	77	111	128	132	5	13	3	2,5	0,83	0,73	0,4
	3	2,5	42	104,3	77	77	109	128	133	6	12	3	2,5	0,55	1,1	0,6
	3	2,5	35	99,6	80	77	117	128	130	6	12	3	2,5	0,35	1,74	0,96
70	1	1	18	85,9	76	76	93	94	96	4	4	1	1	0,32	1,9	1,05
	2	2	23	90,1	78	81	100	102	106	4	5,5	2	2	0,46	1,3	0,72
	1,5	1,5	24	91,7	78	77	98	103	105	5	6	1,5	1,5	0,43	1,38	0,76
	1,5	1,5	22	91	78	77	99	103	105	5	5,5	1,5	1,5	0,28	2,11	1,16
	2	1,5	28	97	79	79	104	111	115	6	8	2	1,5	0,38	1,58	0,87
	2	1,5	25	95,2	81	79	110	116	118	4	5	2	1,5	0,42	1,43	0,79
	2	1,5	34	97,5	78	79	105	116	120	5	9,5	2	1,5	0,59	1,02	0,56
	2	1,5	28	96,4	80	79	108	116	119	4	6	2	1,5	0,42	1,43	0,79
	2	1,5	31	98,2	79	79	107	116	120	7	9	2	1,5	0,41	1,47	0,81
	4	2,5	37	–	81	87	105	119	124	7	8	4	2,5	0,52	1,15	0,63
	3	2,5	31	99,6	80	85	111	119	123	7	8	3	2,5	0,33	1,8	0,99
	3	3	47	108,8	81	90	106	126	133	6	12	3	3	0,87	0,69	0,38
	3	2,5	30	106,6	89	82	130	138	140	5	8	3	2,5	0,35	1,74	0,96
	3	2,5	47	110,4	84	82	118	138	141	5	13	3	2,5	0,83	0,73	0,4
	3	2,5	44	112	83	82	117	138	143	7	12	3	2,5	0,55	1,1	0,6
	3	2,5	37	106,4	86	82	125	138	140	6	12	3	2,5	0,35	1,74	0,96

Tapered roller bearings

Single row to DIN/ISO

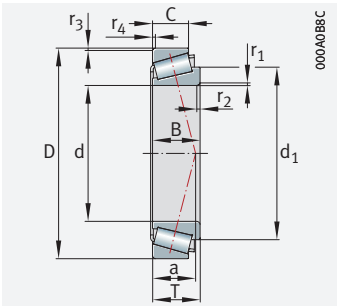

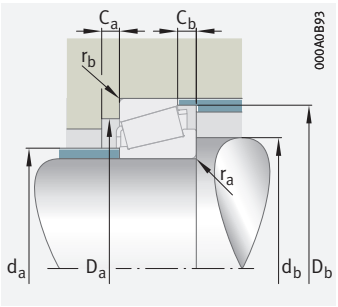

Mounting dimensions

d = 75 – 80 mm

Main dimensions					Basic load ratings		Fatigue limit load	Limiting speed	Speed rating	Mass	Designation	Interchange designation to ISO 10317 and ISO 355
d	D	B	C	T	dyn. C_r	stat. C_{0r}	C_{ur}	n_G	$n_{\vartheta r}$	m	➤580 | 1.12 ➤581 | 1.13 X-life ➤565	
					N	N	N	min^{-1}	min^{-1}	≈ kg		
75	105	20	16	20	74 000	124 000	15 400	6 600	3 550	0,52	**32915**	T2BC075
	115	20	15,5	21	88 000	122 000	14 500	6 100	3 500	0,7	**T4CB075**	T4CB075
	115	25	19	25	124 000	165 000	27 500	7 200	3 600	0,92	**32015-X-XL**	T4CC075
	115	31	25,5	31	164 000	233 000	40 000	7 100	3 700	1,16	**33015-XL**	T2CE075
	125	37	29	37	178 000	275 000	35 000	5 400	3 300	1,79	**33115**	T3DE075
	130	25	22	27,25	160 000	169 000	26 500	6 700	3 600	1,4	**30215-XL**	T4DB075
	130	31	27	33,25	201 000	227 000	37 000	6 500	3 250	1,75	**32215-XL**	T4DC075
	130	41	31	41	245 000	310 000	52 000	6 300	3 350	2,23	**33215-XL**	T3EE075
	135	40	34	42	200 000	310 000	39 500	5 000	3 400	2,66	**T5ED075**	T5ED075
	135	42	35	43	233 000	330 000	42 000	5 100	3 350	2,655	**T2ED075**	T2ED075
	150	38	29	42	238 000	275 000	43 000	5 400	3 950	3,22	**T7FC075-XL**	T7FC075
	160	37	31	40	250 000	295 000	35 000	4 600	3 400	3,68	**30315-A**	T2GB075
	160	37	26	40	240 000	236 000	35 500	5 300	3 300	3,45	**31315-XL**	T7GB075
	160	55	45	58	360 000	475 000	58 000	4 450	3 300	5,3	**32315-A**	T2GD075
	160	55	45	58	330 000	470 000	55 000	4 350	3 400	5,525	**32315-B**	T5GD075
80	110	20	16	20	77 000	132 000	16 400	6 300	3 350	0,571	**32916**	T2BC080
	125	22,5	17,5	24	114 000	150 000	18 200	5 600	3 450	1	**T4CB080**	T4CB080
	125	29	22	29	162 000	212 000	34 500	6 600	3 450	1,29	**32016-X-XL**	T3CC080
	125	36	29,5	36	208 000	290 000	49 500	6 500	3 550	1,63	**33016-XL**	T2CE080
	130	37	29	37	188 000	300 000	38 000	5 200	3 050	1,9	**33116**	T3DE080
	140	26	22	28,25	184 000	193 000	29 000	6 300	3 400	1,67	**30216-XL**	T3EB080
	140	33	28	35,25	234 000	265 000	41 500	6 100	3 050	2,14	**32216-XL**	T3EC080
	140	40	34	42	204 000	320 000	41 000	4 800	3 250	2,75	**T5ED080**	T5ED080
	140	46	35	46	295 000	385 000	63 000	5 800	3 150	2,93	**33216-XL**	T3EE080
	145	45	38	46	265 000	370 000	46 500	4 750	3 200	3,26	**T2ED080**	T2ED080
	160	41	31	45	270 000	315 000	49 000	5 100	3 750	3,98	**T7FC080-XL**	T7FC080
	170	39	33	42,5	285 000	345 000	40 000	4 250	3 200	4,37	**30316-A**	T2GB080
	170	39	27	42,5	270 000	270 000	39 500	5 000	3 150	4,09	**31316-XL**	T7GB080
	170	58	48	61,5	355 000	510 000	62 000	4 100	3 300	6,74	**32316-B**	T5GD080
	170	58	48	61,5	475 000	540 000	84 000	5 000	3 150	6,4	**32316-XL**	T2GD080

medias *https://www.schaeffler.de/std/1F9A*

Dimensions					Mounting dimensions									Calculation factors		
d	r_1, r_2	r_3, r_4	a	d_1	d_a	d_b	D_a	D_a	D_b	C_a	C_b	r_a	r_b	e	Y	Y_0
	min.	min.	≈	≈	max.	min.	min.	max.	min.	min.	min.	max.	max.			
75	1	1	19	90,5	81	81	98	99	101	4	4	1	1	0,33	1,8	0,99
	2	2	25	95,1	83	85	105	107	111	4	5,5	2	2	0,48	1,24	0,68
	1,5	1,5	26	97	83	82	103	108	110	5	6	1,5	1,5	0,46	1,31	0,72
	1,5	1,5	23	96,5	83	82	104	108	110	6	5,5	1,5	1,5	0,3	2,01	1,11
	2	1,5	30	101,4	84	84	109	116	120	6	8	2	1,5	0,4	1,51	0,83
	2	1,5	27	100,4	86	84	115	121	124	4	5	2	1,5	0,43	1,38	0,76
	2	1,5	30	101,6	85	84	115	121	124	4	6	2	1,5	0,43	1,38	0,76
	2	1,5	32	104,2	83	84	111	121	125	7	10	2	1,5	0,43	1,4	0,77
	5	2,5	38	–	85	92	109	124	129	6	8	5	2,5	0,55	1,1	0,6
	3	2,5	32	–	86	89	116	124	128	7	8	3	2,5	0,35	1,73	0,95
	3	3	51	116,6	87	96	114	136	143	6	13	3	3	0,87	0,69	0,38
	3	2,5	32	114	95	87	139	148	149	5	9	3	2,5	0,35	1,74	0,96
	3	2,5	50	117,6	91	87	127	148	151	6	14	3	2,5	0,83	0,73	0,4
	3	2,5	39	114	91	87	133	148	149	7	13	3	2,5	0,35	1,74	0,96
	3	2,5	47	120	90	87	124	148	151	7	14	3	2,5	0,55	1,1	0,6
80	1	1	20	96,1	86	86	102	104	106	4	4	1	1	0,35	1,71	0,94
	2	2	26	101	86	90	113	115	120	5	6,5	2	2	0,45	1,33	0,73
	1,5	1,5	27	104,2	89	87	112	117	120	6	7	1,5	1,5	0,42	1,42	0,78
	1,5	1,5	26	103,2	90	87	112	117	119	6	6,5	1,5	1,5	0,28	2,16	1,19
	2	1,5	31	106,6	89	89	114	121	126	6	8	2	1,5	0,42	1,44	0,79
	2,5	2	28	106,4	91	90	124	130	132	4	6	2,5	2	0,42	1,43	0,79
	2,5	2	31	107,7	90	90	122	130	134	5	7	2,5	2	0,42	1,43	0,79
	5	3	40	–	89	97	113	128	124	6	8	5	3	0,57	1,05	0,58
	2,5	2	35	112,2	89	90	119	130	135	7	11	2,5	2	0,43	1,41	0,78
	3	2,5	33	110,3	92	95	125	134	137	7	8	3	2,5	0,32	1,88	1,03
	3	3	54	124,3	93	103	121	146	152	7	14	3	3	0,87	0,69	0,38
	3	2,5	34	121,7	102	92	148	158	159	5	9,5	3	2,5	0,35	1,74	0,96
	3	2,5	53	124,4	97	92	134	158	159	6	15	3	2,5	0,83	0,73	0,4
	3	2,5	49	126,85	96	92	130	158	160	7	13,5	3	2,5	0,55	1,1	0,6
	3	2,5	42	120,6	98	92	142	158	159	7	13,5	3	2,5	0,35	1,74	0,96

Tapered roller bearings

Single row to DIN/ISO

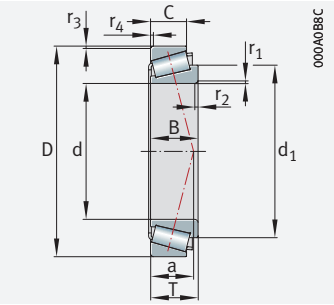

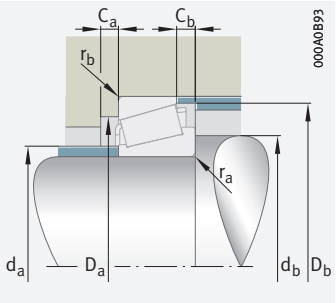

Mounting dimensions

d = 85 – 90 mm

Main dimensions					Basic load ratings		Fatigue limit load	Limiting speed	Speed rating	Mass	Designation	Interchange designation to ISO 10317 and ISO 355
d	D	B	C	T	dyn. C_r	stat. C_{0r}	C_{ur}	n_G	$n_{\vartheta r}$	m	➤*580*|*1.12* ➤*581*|*1.13* X-life ➤*565*	
					N	N	N	min^{-1}	min^{-1}	≈ kg		
85	120	23	18	23	95 000	160 000	20 000	5 700	3 250	0,8	**32917**	T2BC085
	130	22,5	17,5	24	120 000	163 000	19 500	5 400	3 250	1,05	**T4CB085**	T4CB085
	130	29	22	29	167 000	224 000	36 500	6 300	3 250	1,36	**32017-X-XL**	T4CC085
	130	36	29,5	36	184 000	315 000	40 500	5 100	3 300	1,758	**33017**	T2CE085
	140	41	32	41	260 000	350 000	57 000	5 800	2 950	2,54	**33117-XL**	T3DE085
	145	40	34	42	210 000	340 000	42 500	4 600	3 050	2,87	**T5ED085**	T5ED085
	150	28	24	30,5	212 000	226 000	34 000	5 900	3 250	2,08	**30217-XL**	T3EB085
	150	36	30	38,5	270 000	305 000	47 500	5 700	2 950	2,7	**32217-XL**	T3EC085
	150	46	38	46	275 000	395 000	49 000	4 600	3 050	3,4	**T2ED085**	T2ED085
	150	49	37	49	345 000	440 000	70 000	5 400	3 050	3,6	**33217-XL**	T3EE085
	170	45	33	48	310 000	365 000	56 000	4 800	3 550	4,76	**T7FC085-XL**	T7FC085
	180	41	34	44,5	310 000	375 000	43 000	4 050	3 100	5	**30317-A**	T2GB085
	180	41	28	44,5	300 000	300 000	43 500	4 700	3 000	4,73	**31317-XL**	T7GB085
	180	60	49	63,5	480 000	590 000	92 000	4 650	3 000	7,7	**32317-B-XL**	T5GD085
	180	60	49	63,5	510 000	580 000	89 000	4 750	3 000	7,3	**32317-XL**	T2GD085
90	125	23	18	23	99 000	171 000	21 400	5 500	3 050	0,918	**32918**	T2BC090
	135	22,5	17,5	24	119 000	164 000	19 300	5 100	3 100	1,1	**T4CB090**	T4CB090
	140	32	24	32	195 000	255 000	41 000	5 900	3 200	1,77	**32018-X-XL**	T3CC090
	140	39	32,5	39	255 000	365 000	60 000	5 700	3 150	2,26	**33018-XL**	T2CE090
	150	40	34	42	214 000	355 000	44 000	4 450	2 900	2,99	**T5ED090**	T5ED090
	150	45	35	45	315 000	425 000	68 000	5 400	2 800	3,16	**33118-XL**	T3DE090
	155	46	38	46	280 000	410 000	50 000	4 400	2 900	3,5	**T2ED090**	T2ED090
	160	30	26	32,5	239 000	260 000	38 000	5 500	3 050	2,59	**30218-XL**	T3FB090
	160	40	34	42,5	310 000	360 000	56 000	5 300	2 850	3,43	**32218-XL**	T3FC090
	160	55	42	55	350 000	520 000	63 000	4 200	3 000	4,76	**33218**	T3FE090
	175	45	33	48	315 000	380 000	58 000	4 600	3 400	4,97	**T7FC090-XL**	T7FC090
	190	43	36	46,5	330 000	395 000	44 500	3 850	3 050	5,8	**30318-A**	T2GB090
	190	43	30	46,5	325 000	325 000	46 500	4 450	2 900	5,5	**31318-XL**	T7GB090
	190	64	53	67,5	435 000	630 000	75 000	3 650	2 850	9,29	**32318-B**	–
	190	64	53	67,5	580 000	660 000	100 000	4 500	2 750	8,21	**32318-XL**	T2GD090

medias *https://www.schaeffler.de/std/1F9A*

Dimensions					Mounting dimensions									Calculation factors		
d	r_1, r_2	r_3, r_4	a	d_1	d_a	d_b	D_a	D_a	D_b	C_a	C_b	r_a	r_b	e	Y	Y_0
	min.	min.	≈	≈	max.	min.	min.	max.	min.	min.	min.	max.	max.			
85	1,5	1,5	21	103,1	92	92	111	113	115	5	5	1,5	1,5	0,33	1,83	1,01
	2	2	27	106,1	91	95	118	120	125	5	6,5	2	2	0,47	1,27	0,7
	1,5	1,5	29	109,1	94	92	117	122	125	6	7	1,5	1,5	0,44	1,36	0,75
	1,5	1,5	27	108,5	94	92	118	122	125	6	6,5	1,5	1,5	0,29	2,06	1,13
	2,5	2	33	114,7	95	95	122	130	135	7	9	2,5	2	0,41	1,48	0,81
	5	3	39	–	96	103	120	133	139	6	8	5	3	0,52	1,14	0,63
	2,5	2	30	112,6	97	95	132	140	141	5	6,5	2,5	2	0,42	1,43	0,79
	2,5	2	34	114,7	96	95	130	140	142	5	8,5	2,5	2	0,42	1,43	0,79
	3	3	34	115,5	97	100	130	138	142	5	7	3	3	0,33	1,8	0,99
	2,5	2	37	117,8	95	95	128	140	144	7	12	2,5	2	0,42	1,43	0,79
	4	4	55	132	100	110	131	153	161	7	15	4	4	0,8	0,75	0,41
	3	3	36	127,6	107	99	156	166	167	6	10,5	3	3	0,35	1,74	0,96
	4	3	56	131,8	103	99	143	166	169	6	16,5	4	3	0,83	0,73	0,4
	4	3	52	133,5	102	99	138	166	169	7	14,5	4	3	0,55	1,1	0,6
	4	3	44	127,6	103	99	150	166	167	8	14,5	4	3	0,35	1,74	0,96
90	1,5	1,5	22	107,8	97	97	116	–	120	5	5	1,5	1,5	0,34	1,75	0,96
	2	2	30	111,1	96	100	123	125	130	5	6,5	2	2	0,49	1,21	0,67
	2	1,5	30	115,8	100	99	125	131	134	6	8	2	1,5	0,42	1,42	0,78
	2	1,5	28	116,4	100	99	127	131	135	7	6,5	2	1,5	0,27	2,23	1,23
	5	3	41	–	100	107	124	138	144	6	8	5	3	0,55	1,1	0,6
	2,5	2	36	121,8	100	100	130	140	144	7	10	2,5	2	0,4	1,51	0,83
	3	3	34	–	102	106	135	143	147	6	8	3	3	0,33	1,84	1,01
	2,5	2	32	120	103	100	140	150	150	5	6,5	2,5	2	0,42	1,43	0,79
	2,5	2	36	121,8	102	100	138	150	152	5	8,5	2,5	2	0,42	1,43	0,79
	2,5	2	41	125,8	101	100	135	150	154	9	13	2,5	2	0,42	1,43	0,78
	4	4	58	137,3	102	115	134	161	167	7	15	4	4	0,83	0,72	0,4
	4	3	37	135	113	104	165	176	176	6	10,5	4	3	0,35	1,74	0,96
	4	3	58	138,9	109	104	151	176	179	6	16,5	4	3	0,83	0,73	0,4
	4	3	55	–	108	104	146	176	180	8	14,5	4	3	0,55	1,1	0,6
	4	3	47	133	108	104	157	176	177	8	14,5	4	3	0,35	1,74	0,96

Tapered roller bearings

Single row to DIN/ISO

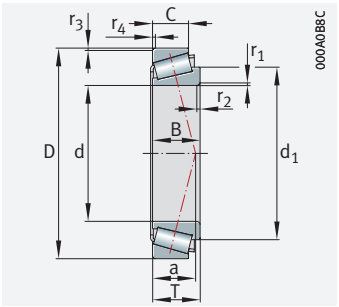

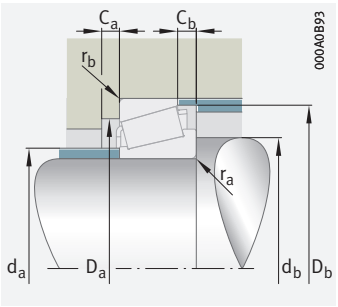

Mounting dimensions

d = 95 – 100 mm

Main dimensions					Basic load ratings		Fatigue limit load	Limiting speed	Speed rating	Mass	Designation	Interchange designation to ISO 10317 and ISO 355
d	D	B	C	T	dyn. C_r	stat. C_{0r}	C_{ur}	n_G	$n_{\vartheta r}$	m	➤*580*|*1.12* ➤*581*|*1.13* X-life ➤*565*	
					N	N	N	min^{-1}	min^{-1}	≈ kg		
95	130	23	18	23	102 000	181 000	22 500	5 300	2 900	0,88	**32919**	T2BC095
	140	22,5	17,5	24	114 000	167 000	19 500	4 950	2 950	1,15	**T4CB095**	T4CB095
	145	32	24	32	201 000	275 000	43 500	5 600	3 000	1,85	**32019-X-XL**	T4CC095
	145	39	32,5	39	260 000	380 000	62 000	5 600	3 000	2,573	**33019-XL**	T2CE095
	155	40	34	42	218 000	365 000	45 000	4 250	2 800	3,15	**T5ED095**	T5ED095
	160	46	38	46	285 000	430 000	52 000	4 500	2 750	3,76	**T2ED095**	T2ED095
	160	49	38	49	305 000	490 000	60 000	4 200	2 750	3,95	**33119**	T3EE095
	170	32	27	34,5	265 000	285 000	42 000	5 100	2 950	3,09	**30219-XL**	T3FB095
	170	43	37	45,5	355 000	420 000	64 000	4 950	2 700	4,22	**32219-XL**	T3FC095
	170	58	44	58	375 000	560 000	68 000	3 950	2 850	5,5	**33219**	T3FE095
	180	45	33	49	325 000	400 000	60 000	4 400	3 300	5,2	**T7FC095-XL**	T7FC095
	200	45	38	49,5	360 000	440 000	48 500	3 650	2 950	6,7	**30319-A**	T2GB095
	200	45	32	49,5	360 000	370 000	52 000	4 250	2 800	6,5	**31319-XL**	T7GB095
	200	67	55	71,5	570 000	690 000	104 000	4 150	2 700	10,9	**32319-B-XL**	–
	200	67	55	71,5	620 000	710 000	107 000	4 250	2 600	10	**32319-XL**	T2GD095
100	140	25	20	25	126 000	211 000	25 500	4 900	2 750	1,17	**32920**	T2CC100
	145	22,5	17,5	24	119 000	179 000	20 700	4 750	2 800	1,21	**T4CB100**	T4CB100
	150	32	24	32	205 000	285 000	44 500	5 400	2 900	1,91	**32020-X-XL**	T4CC100
	150	39	32,5	39	225 000	395 000	48 500	4 450	2 900	2,43	**33020**	T2CE100
	160	40	34	42	275 000	395 000	61 000	5 000	2 650	3,5	**T5ED100-XL**	T5ED100
	165	46	39	47	300 000	470 000	57 000	4 100	2 600	3,95	**T2EE100**	T2EE100
	165	52	40	52	325 000	540 000	66 000	4 000	2 700	4,39	**33120**	T3EE100
	180	34	29	37	295 000	325 000	47 500	4 850	2 850	3,76	**30220-XL**	T3FB100
	180	46	39	49	400 000	475 000	72 000	4 650	2 600	5,1	**32220-XL**	T3FC100
	180	63	48	63	510 000	660 000	102 000	4 500	2 650	6,8	**33220-XL**	T3FE100
	215	47	39	51,5	490 000	510 000	72 000	4 100	2 700	8,3	**30320-XL**	T2GB100
	215	51	35	56,5	450 000	480 000	67 000	3 850	2 550	8,7	**31320-X-XL**	T7GB100
	215	73	60	77,5	610 000	840 000	96 000	3 250	2 360	12,9	**32320-A**	T2GD100
	215	73	60	77,5	680 000	780 000	114 000	3 200	2 500	13,4	**32320-B-XL**	–

medias *https://www.schaeffler.de/std/1F9A*

Dimensions					Mounting dimensions									Calculation factors		
d	r_1, r_2	r_3, r_4	a	d_1	d_a	d_b	D_a	D_a	D_b	C_a	C_b	r_a	r_b	e	Y	Y_0
	min.	min.	≈	≈	max.	min.	min.	max.	min.	min.	min.	max.	max.			
95	1,5	1,5	24	113	102	102	121	123	125	5	5	1,5	1,5	0,36	1,68	0,92
	2	2	29	–	104	107	129	130	135	5	6,5	2	2	0,45	1,32	0,73
	2	1,5	32	121,4	105	104	130	136	140	6	8	2	1,5	0,44	1,36	0,75
	2	1,5	29	120,8	104	104	131	136	139	7	6,5	2	1,5	0,28	2,16	1,19
	5	3	43	–	104	112	128	143	150	6	8	5	3	0,57	1,06	0,58
	3	3	35	125,6	107	111	140	148	152	8	8	3	3	0,34	1,77	0,97
	2,5	2	38	–	106	105	138	150	154	8	11	2,5	2	0,4	1,51	0,83
	3	2,5	34	127,3	110	107	149	158	159	5	7,5	3	2,5	0,42	1,43	0,79
	3	2,5	39	129	108	107	145	158	161	5	8,5	3	2,5	0,42	1,43	0,79
	3	2,5	43	132	107	107	144	158	163	9	14	3	2,5	0,41	1,47	0,81
	4	4	61	142,4	108	119	138	164	172	7	16	4	4	0,87	0,69	0,38
	4	3	40	139	118	109	172	186	184	6	11,5	4	3	0,35	1,74	0,96
	4	3	62	145,6	114	109	157	186	187	6	17,5	4	3	0,83	0,73	0,4
	4	3	58	149,3	115	109	153	186	189	8	16,5	4	3	0,55	1,1	0,6
	4	3	49	142	115	109	166	186	186	8	16,5	4	3	0,35	1,74	0,96
100	1,5	1,5	24	120,6	109	107	131	131	135	5	5	1,5	1,5	0,33	1,82	1
	3	3	30	122,7	109	112	133	133	140	5	6,5	3	3	0,47	1,27	0,7
	2	1,5	33	126,3	109	109	134	141	144	6	8	2	1,5	0,46	1,31	0,72
	2	1,5	29	124,7	108	109	135	141	143	7	6,5	2	1,5	0,29	2,09	1,15
	5	3	42	133,8	110	117	135	146	154	6	8	5	3	0,53	1,14	0,63
	3	3	35	131,3	112	116	145	151	157	8	8	3	3	0,32	1,88	1,04
	2,5	2	40	–	111	110	142	155	159	8	12	2,5	2	0,41	1,48	0,81
	3	2,5	36	134,2	116	112	157	168	168	5	8	3	2,5	0,42	1,43	0,79
	3	2,5	42	136,5	114	112	154	168	171	5	10	3	2,5	0,42	1,43	0,79
	3	2,5	46	138,8	112	112	151	168	172	10	15	3	2,5	0,4	1,48	0,82
	4	3	42	150	127	114	184	201	197	6	12,5	4	3	0,35	1,74	0,96
	4	3	68	158,5	121	114	168	201	202	7	21,5	4	3	0,83	0,73	0,4
	4	3	53	152	123	114	177	201	200	8	17,5	4	3	0,35	1,74	0,96
	4	3	62	155,9	117	114	166	201	203	8	17,5	4	3	0,53	1,13	0,62

Tapered roller bearings

Single row to DIN/ISO

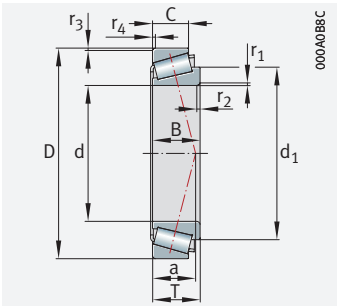

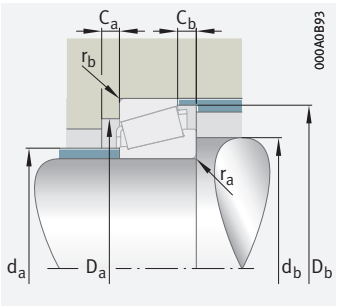

Mounting dimensions

d = 105 – 120 mm

Main dimensions					Basic load ratings		Fatigue limit load	Limiting speed	Speed rating	Mass	Designation	Interchange designation to ISO 10317 and ISO 355
d	D	B	C	T	dyn. C_r	stat. C_{0r}	C_{ur}	n_G	$n_{\vartheta r}$	m	➤580 | 1.12 ➤581 | 1.13 X-life ➤565	
					N	N	N	min^{-1}	min^{-1}	≈ kg		
105	145	25	20	25	128 000	217 000	26 000	4 700	2 650	1,2	**32921**	T2CC105
	150	22,5	17,5	24	121 000	185 000	21 100	4 600	2 650	1,25	**T4CB105**	T4CB105
	160	35	26	35	238 000	330 000	51 000	5 100	2 800	2,44	**32021-X-XL**	T4DC105
	160	43	34	43	265 000	450 000	55 000	4 150	2 850	3,089	**33021**	T2DE105
	170	46	39	47	315 000	495 000	59 000	4 200	2 490	4,13	**T2EE105**	T2EE105
	175	56	44	56	360 000	600 000	70 000	3 900	2 600	5,44	**33121**	T3EE105
	190	36	30	39	330 000	370 000	53 000	4 600	2 700	4,46	**30221-XL**	T3FB105
	190	50	43	53	455 000	550 000	83 000	4 400	2 550	6,3	**32221-XL**	T3FC105
	190	68	52	68	495 000	760 000	89 000	3 500	2 480	8,379	**33221**	T3FE105
	225	49	41	53,5	530 000	560 000	78 000	3 950	2 550	9,4	**30321-XL**	T2GB105
	225	53	36	58	480 000	510 000	71 000	3 700	2 440	10	**31321-X-XL**	T7GB105
	225	77	63	81,5	670 000	930 000	105 000	3 100	2 220	14,8	**32321-A**	T2GD105
110	150	25	20	25	133 000	231 000	27 500	4 550	2 500	1,24	**32922**	T2CC110
	160	25,5	19,5	27	156 000	237 000	26 500	4 300	2 550	1,69	**T4CB110**	T4CB110
	170	38	29	38	285 000	395 000	60 000	4 750	2 650	3,05	**32022-X-XL**	T4DC110
	170	47	37	47	295 000	520 000	63 000	3 950	2 750	3,83	**33022**	T2DE110
	175	46	39	47	335 000	540 000	64 000	3 800	2 360	4,27	**T2EE110**	T2EE110
	180	56	43	56	440 000	630 000	97 000	4 400	2 460	5,64	**33122-XL**	T3EE110
	200	38	32	41	375 000	420 000	60 000	4 300	2 550	5,2	**30222-XL**	T3FB110
	200	53	46	56	490 000	590 000	88 000	4 150	2 410	7,2	**32222-XL**	T3FC110
	240	50	42	54,5	570 000	600 000	81 000	3 700	2 340	11	**30322-XL**	T2GB110
	240	57	38	63	550 000	590 000	80 000	3 450	2 250	12,2	**31322-X-XL**	T7GB110
	240	80	65	84,5	740 000	1 020 000	129 000	2 900	2 030	18	**32322-A**	T2GD110
120	165	29	23	29	176 000	305 000	35 500	4 100	2 370	1,77	**32924**	T2CC120
	170	25	19,5	27	181 000	238 000	33 500	4 850	2 420	1,74	**T4CB120-XL**	T4CB120
	180	38	29	38	295 000	420 000	63 000	4 450	2 460	3,27	**32024-X-XL**	T4DC120
	180	48	38	48	310 000	560 000	66 000	3 700	2 600	4,22	**33024**	T2DE120
	190	49	41	50	360 000	590 000	69 000	3 500	2 230	5,282	**T2EE120**	T2EE120
	200	62	48	62	460 000	770 000	89 000	3 250	2 160	7,68	**33124**	T3FE120
	215	40	34	43,5	395 000	445 000	64 000	4 000	2 470	6,2	**30224-XL**	T4FB120
	215	58	50	61,5	570 000	730 000	107 000	3 800	2 150	9,3	**32224-XL**	T4FD120
	260	55	46	59,5	660 000	700 000	94 000	3 400	2 150	14,1	**30324-XL**	T2GB120
	260	62	42	68	640 000	700 000	93 000	3 150	2 020	15,8	**31324-X-XL**	T7GB120
	260	86	69	90,5	670 000	970 000	120 000	2 750	2 060	21,7	**32324**	T2GD120

medias *https://www.schaeffler.de/std/1F9A*

Dimensions					Mounting dimensions									Calculation factors		
d	r_1, r_2	r_3, r_4	a	d_1	d_a	d_b	D_a	D_a	D_b	C_a	C_b	r_a	r_b	e	Y	Y_0
	min.	min.	≈	≈	max.	min.	min.	max.	min.	min.	min.	max.	max.			
105	1,5	1,5	25	125	114	112	135	136	140	5	5	1,5	1,5	0,34	1,75	0,96
	3	3	32	–	114	116	138	138	145	5	6,5	3	3	0,49	1,22	0,67
	2,5	2	35	133,7	116	115	143	150	154	6	9	2,5	2	0,44	1,35	0,74
	2,5	2	31	131,5	116	115	145	150	153	7	9	2,5	2	0,28	2,12	1,17
	3	3	36	136,3	117	121	150	158	163	8	8	3	3	0,33	1,83	1,01
	2,5	2	43	142	116	115	150	165	169	9	12	2,5	2	0,4	1,48	0,82
	3	2,5	38	141,6	122	117	165	178	177	6	9	3	2,5	0,42	1,43	0,79
	3	2,5	45	143,6	120	117	161	178	180	5	10	3	2,5	0,42	1,43	0,79
	3	2,5	49	–	117	117	159	178	182	10	16	3	2,5	0,4	1,49	0,82
	4	3	44	156,7	132	119	193	211	206	7	12,5	4	3	0,35	1,74	0,96
	4	3	70	165,3	127	119	176	211	211	7	22	4	3	0,83	0,73	0,4
	4	3	56	160,85	128	119	185	211	209	9	18,5	4	3	0,35	1,74	0,96
110	1,5	1,5	26	130,9	118	117	140	141	145	5	5	1,5	1,5	0,36	1,69	0,93
	3	3	32	134,4	120	123	148	148	154	5	7	3	3	0,44	1,36	0,75
	2,5	2	37	141	122	120	152	160	163	7	9	2,5	2	0,43	1,39	0,77
	2,5	2	33	139,2	123	120	152	160	161	7	10	2,5	2	0,29	2,09	1,15
	4	3	37	141	121	126	155	163	168	5	8	4	3	0,34	1,78	0,98
	2,5	2	44	–	121	120	155	170	174	9	13	2,5	2	0,42	1,43	0,79
	3	2,5	40	149,3	129	122	174	188	187	6	9	3	2,5	0,42	1,43	0,79
	3	2,5	46	151,4	126	122	170	188	190	6	10	3	2,5	0,42	1,43	0,79
	4	3	45	166,6	141	124	206	226	220	8	12,5	4	3	0,35	1,74	0,96
	4	3	75	176,7	135	124	188	226	224	7	25	4	3	0,83	0,73	0,4
	4	3	58	171,5	137	124	198	226	222	9	19,5	4	3	0,35	1,74	0,96
120	1,5	1,5	29	141	128	127	154	158	160	6	6	1,5	1,5	0,35	1,72	0,95
	3	3	35	144,6	130	132	157	157	164	5	7,5	3	3	0,47	1,27	0,7
	2,5	2	40	151,2	131	130	161	170	173	7	9	2,5	2	0,46	1,31	0,72
	2,5	2	36	148,5	132	130	160	170	171	6	10	2,5	2	0,31	1,97	1,08
	4	3	39	–	133	137	169	177	182	9	9	4	3	0,32	1,86	1,02
	2,5	2	48	–	133	130	172	190	192	9	14	2,5	2	0,4	1,51	0,83
	3	2,5	44	162	140	132	187	203	201	6	9,5	3	2,5	0,43	1,38	0,76
	3	2,5	51	164,3	136	132	181	203	204	7	11,5	3	2,5	0,43	1,38	0,76
	4	3	48	179,5	152	134	221	246	237	10	13,5	4	3	0,35	1,74	0,96
	4	3	82	191,5	145	134	203	246	244	9	26	4	3	0,83	0,73	0,4
	4	3	66	187	148	134	213	246	239	9	21,5	4	3	0,39	1,53	0,84

Tapered roller bearings

Single row to DIN/ISO

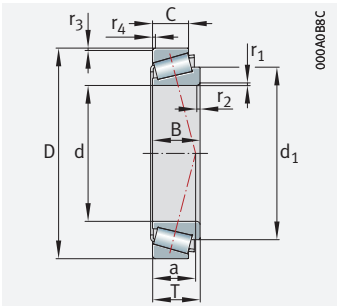

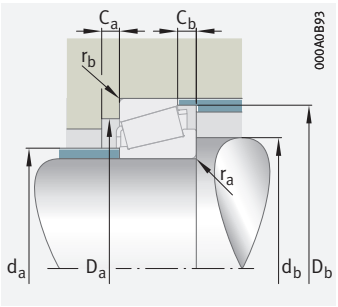

Mounting dimensions

d = 130 – 150 mm

Main dimensions					Basic load ratings		Fatigue limit load	Limiting speed	Speed rating	Mass	Designation	Interchange designation to ISO 10317 and ISO 355
d	D	B	C	T	dyn. C_r	stat. C_{0r}	C_{ur}	n_G	$n_{\vartheta r}$	m	➤*580*|*1.12* ➤*581*|*1.13* X-life ➤*565*	
					N	N	N	min^{-1}	min^{-1}	≈ kg		
130	180	32	25	32	208 000	370 000	42 000	3 750	2 220	2,43	**32926**	T2CC130
	185	27	21	29	212 000	275 000	37 500	4 050	2 280	2,24	**T4CB130-XL**	T4CB130
	200	45	34	45	385 000	550 000	81 000	4 000	2 320	5	**32026-X-XL**	T4EC130
	200	55	43	55	410 000	740 000	85 000	3 250	2 260	6,32	**33026**	T2EE130
	230	40	34	43,75	420 000	470 000	64 000	3 700	2 290	7	**30226-XL**	T4FB130
	230	64	54	67,75	660 000	850 000	122 000	3 550	1 980	11,3	**32226-XL**	T4FD130
	280	58	49	63,75	710 000	740 000	98 000	3 150	2 030	16,9	**30326-XL**	T2GB130
	280	66	44	72	720 000	790 000	103 000	2 950	1 860	19	**31326-X-XL**	T7GB130
	280	93	78	98,75	830 000	1 120 000	136 000	2 500	1 860	26,6	**32326**	–
140	190	32	25	32	214 000	395 000	44 000	3 500	2 070	2,6	**32928**	T2CC140
	195	27	21	29	190 000	305 000	33 000	3 450	2 100	2,39	**T4CB140**	T4CB140
	210	45	34	45	400 000	590 000	86 000	3 800	2 180	5,4	**32028-X-XL**	T4DC140
	210	56	44	56	435 000	780 000	87 000	3 100	2 150	6,8	**33028**	T2DE140
	215	52	44	53	430 000	730 000	82 000	3 050	1 860	6,89	**T2ED140**	T2ED140
	250	42	36	45,75	490 000	560 000	76 000	3 450	2 040	8,8	**30228-XL**	T4FB140
	250	68	58	71,75	760 000	990 000	139 000	3 250	1 760	14,6	**32228-XL**	T4FD140
	300	62	53	67,75	690 000	730 000	95 000	3 000	2 000	20,3	**30328-XL**	T2GB140
	300	70	47	77	830 000	910 000	116 000	2 700	1 690	23,2	**31328-X-XL**	T7GB140
	300	102	85	107,75	1 390 000	1 710 000	228 000	2 750	1 450	35,132	**32328-XL**	–
150	210	30	23	32	217 000	345 000	34 000	3 250	2 040	3,04	**T4DB150**	T4DB150
	210	38	30	38	285 000	495 000	54 000	3 200	2 040	3,9	**32930**	T2DC150
	225	48	36	48	455 000	680 000	96 000	3 550	1 990	6,5	**32030-X-XL**	T4EC150
	225	52	44	53	435 000	760 000	84 000	2 900	1 740	7,25	**T2ED150**	T2ED150
	225	59	46	59	550 000	890 000	127 000	3 450	1 910	8,1	**33030-XL**	T2EE150
	270	45	38	49	550 000	630 000	84 000	3 200	1 880	10,9	**30230-XL**	T4GB150
	270	73	60	77	870 000	1 150 000	159 000	3 000	1 590	18,1	**32230-XL**	T4GD150
	320	65	55	72	950 000	1 030 000	127 000	2 750	1 630	25	**30330-XL**	T2GB150
	320	75	50	82	930 000	1 040 000	130 000	2 550	1 540	27,8	**31330-X-XL**	T7GB150
	320	108	90	114	1 330 000	1 950 000	226 000	2 120	1 320	42,5	**32330-A**	–

medias *https://www.schaeffler.de/std/1F9A*

Dimensions					Mounting dimensions									Calculation factors		
d	r_1, r_2	r_3, r_4	a	d_1	d_a	d_b	D_a	D_a	D_b	C_a	C_b	r_a	r_b	e	Y	Y_0
	min.	min.	≈	≈	max.	min.	min.	max.	min.	min.	min.	max.	max.			
130	2	1,5	32	154,7	141	139	167	171	173	6	7	2	1,5	0,34	1,77	0,97
	3	3	38	156,3	140	143	171	173	178	6	8	3	3	0,47	1,27	0,7
	2,5	2	44	165,9	144	140	178	190	192	8	11	2,5	2	0,43	1,38	0,76
	2,5	2	42	166,2	143	140	178	190	192	8	12	2,5	2	0,34	1,76	0,97
	4	3	46	173,1	152	144	203	216	217	7	9,5	4	3	0,43	1,38	0,76
	4	3	56	175,2	146	144	193	216	219	7	13,5	4	3	0,43	1,38	0,76
	5	4	53	193	164	148	239	262	255	8	14,5	5	4	0,35	1,73	0,95
	5	4	87	206	157	148	218	262	261	9	28	5	4	0,83	0,73	0,4
	5	4	69	197,3	160	147	230	262	260	10	20,5	5	4	0,34	1,75	0,96
140	2	1,5	34	164,8	150	149	177	181	184	6	7	2	1,5	0,36	1,67	0,92
	3	3	41	167,2	150	153	180	183	189	6	8	3	3	0,5	1,19	0,66
	2,5	2	46	175,6	153	150	187	200	202	8	11	2,5	2	0,46	1,31	0,72
	2,5	2	46	173,8	152	150	186	200	202	7	12	2,5	2	0,36	1,67	0,92
	4	3	43	–	154	159	193	202	206	9	9	4	3	0,32	1,88	1,04
	4	3	49	188	163	154	219	236	234	9	9,5	4	3	0,43	1,38	0,76
	4	3	60	191,5	159	154	210	236	238	8	13,5	4	3	0,43	1,38	0,76
	5	4	52	204	176	158	255	282	273	8	14,5	5	4	0,28	2,18	1,2
	5	4	94	220,5	169	158	235	282	280	9	30	5	4	0,83	0,73	0,4
	5	4	74	–	170	157	247	282	280	10	22,5	5	4	0,35	1,74	0,96
150	3	3	42	179	161	164	194	198	203	5	9	3	3	0,46	1,3	0,72
	2,5	2	36	177,8	162	160	194	201	202	7	8	2,5	2	0,33	1,83	1,01
	3	2,5	50	187,8	164	162	200	213	216	8	12	3	2,5	0,46	1,31	0,72
	4	4	45	–	163	168	202	210	216	9	9	4	4	0,34	1,79	0,98
	3	2,5	48	189,5	164	162	200	213	217	8	13	3	2,5	0,36	1,64	0,9
	4	3	52	201,5	175	164	234	256	250	9	11	4	3	0,43	1,38	0,76
	4	3	64	205,5	171	164	226	256	254	8	17	4	3	0,43	1,38	0,76
	5	4	60	221,5	189	168	273	302	292	9	17	5	4	0,35	1,74	0,96
	5	4	100	235,5	181	168	251	302	300	9	32	5	4	0,83	0,73	0,4
	5	4	79	230	184	167	264	301	299	12	24	5	4	0,35	1,74	0,96

Tapered roller bearings

Single row to DIN/ISO

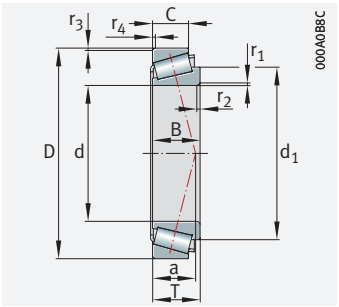

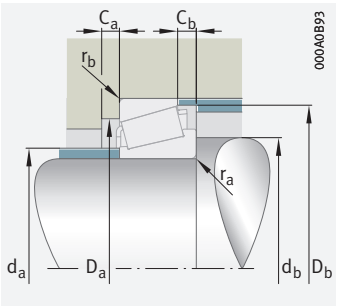

Mounting dimensions

d = 160 – 190 mm

Main dimensions					Basic load ratings		Fatigue limit load	Limiting speed	Speed rating	Mass	Designation	Interchange designation to ISO 10317 and ISO 355
d	D	B	C	T	dyn. C_r	stat. C_{0r}	C_{ur}	n_G	$n_{\vartheta r}$	m	➤580 | 1.12 ➤581 | 1.13 X-life ➤565	
					N	N	N	min^{-1}	min^{-1}	≈ kg		
160	220	30	23	32	226 000	370 000	39 000	3 050	1 910	3,3	**T4DB160**	T4DB160
	220	38	30	38	295 000	530 000	57 000	3 000	1 900	4,1	**32932**	T2DC160
	235	52	44	53	455 000	820 000	102 000	2 800	1 610	7,68	**T2ED160**	T2ED160
	240	51	38	51	500 000	740 000	104 000	3 300	1 850	7,8	**32032-X-XL**	T4EC160
	290	48	40	52	630 000	790 000	103 000	2 950	1 610	14	**30232-XL**	T4GB160
	290	80	67	84	1 030 000	1 380 000	188 000	2 800	1 430	23,2	**32232-XL**	T4GD160
	340	68	58	75	890 000	1 140 000	126 000	2 130	1 500	29,5	**30332-A**	T2GB160
	340	114	95	121	1 170 000	1 740 000	197 000	2 030	1 390	48,2	**32332**	–
170	230	30	23	32	228 000	390 000	47 000	2 950	1 790	3,42	**T4DB170**	T4DB170
	230	38	30	38	295 000	560 000	60 000	2 850	1 790	4,4	**32934**	T3DC170
	245	52	44	53	470 000	860 000	105 000	2 650	1 500	8,02	**T2ED170**	T2ED170
	260	57	43	57	600 000	880 000	122 000	3 050	1 690	10,4	**32034-X-XL**	T4EC170
	310	52	43	57	690 000	810 000	103 000	2 750	1 590	17	**30234-XL**	T4GB170
	310	86	71	91	1 160 000	1 560 000	207 000	2 600	1 310	28,6	**32234-XL**	T4GD170
	360	72	62	80	1 040 000	1 360 000	149 000	1 990	1 340	35	**30334-A**	T2GB170
	360	120	100	127	1 640 000	2 550 000	285 000	1 870	1 090	59,4	**32334**	–
180	240	30	23	32	230 000	400 000	47 500	2 800	1 710	3,62	**T4DB180**	T4DB180
	250	45	34	45	360 000	710 000	86 000	2 600	1 670	6,5	**32936**	T4DC180
	255	52	44	53	475 000	890 000	108 000	2 550	1 420	8,37	**T2ED180**	T2ED180
	280	64	48	64	740 000	1 100 000	148 000	2 800	1 510	14	**32036-X-XL**	T3FD180
	320	52	43	57	720 000	850 000	107 000	2 650	1 510	17,5	**30236-XL**	T4GB180
	320	86	71	91	1 190 000	1 640 000	216 000	2 490	1 240	29,8	**32236-XL**	T4GD180
	380	75	64	83	1 120 000	1 470 000	158 000	1 880	1 250	41	**30336**	–
	380	126	106	134	1 440 000	2 170 000	240 000	1 810	1 200	67	**32336**	–
190	260	34	27	37	300 000	520 000	61 000	2 600	1 630	5,319	**T4DB190**	T4DB190
	260	45	34	45	435 000	750 000	103 000	3 000	1 560	6,9	**32938-XL**	T4DC190
	270	55	46	56	530 000	1 000 000	120 000	2 400	1 310	9,98	**T2ED190**	T2ED190
	290	64	48	64	740 000	1 120 000	151 000	2 700	1 440	14,6	**32038-X-XL**	T4FD190
	340	55	46	60	800 000	930 000	115 000	2 490	1 390	20,8	**30238-XL**	T4GB190
	340	92	75	97	1 340 000	1 820 000	235 000	2 340	1 150	35,7	**32238-XL**	T4GD190
	400	78	65	86	1 210 000	1 600 000	165 000	1 820	1 180	46,7	**30338**	–
	400	132	109	140	1 960 000	2 950 000	315 000	1 680	970	83,2	**32338**	–

medias *https://www.schaeffler.de/std/1F9A*

Dimensions					Mounting dimensions									Calculation factors		
d	r_1, r_2	r_3, r_4	a	d_1	d_a	d_b	D_a	D_a	D_b	C_a	C_b	r_a	r_b	e	Y	Y_0
	min.	min.	≈	≈	max.	min.	min.	max.	min.	min.	min.	max.	max.			
160	3	3	45	189,3	171	174	204	206	213	7	9	3	3	0,49	1,23	0,68
	2,5	2	38	188	173	170	204	210	212	7	8	2,5	2	0,35	1,73	0,95
	4	4	47	–	173	178	211	220	226	9	9	4	4	0,35	1,71	0,94
	3	2,5	53	200,4	175	172	213	228	231	8	13	3	2,5	0,46	1,31	0,72
	4	3	56	220,5	189	174	252	276	269	9	12	4	3	0,43	1,38	0,76
	4	3	69	221	183	174	242	276	274	10	17	4	3	0,43	1,38	0,76
	5	4	63	237	201	178	290	319	310	9	17	5	4	0,35	1,74	0,96
	5	4	86	245	190	177	280	321	320	12	26	5	4	0,38	1,58	0,87
170	3	3	45	199	182	185	214	216	223	6	9	3	3	0,46	1,3	0,72
	2,5	2	42	199	183	180	213	220	222	7	8	2,5	2	0,38	1,57	0,86
	5	4	46	–	183	188	223	230	236	9	9	5	4	0,33	1,84	1,01
	3	2,5	57	214,5	187	182	230	248	249	10	14	3	2,5	0,44	1,35	0,74
	5	4	60	232	203	188	269	292	288	8	14	5	4	0,43	1,38	0,76
	5	4	74	237	196	188	259	292	294	10	20	5	4	0,43	1,38	0,76
	5	4	67	252	213	188	307	342	329	9	18	5	4	0,35	1,74	0,96
	5	4	90	256	208	187	295	341	335	12	27	5	4	0,36	1,67	0,92
180	3	3	48	209,4	192	195	224	228	233	5	9	3	3	0,48	1,24	0,68
	2,5	2	54	217	193	190	225	240	241	8	11	2,5	2	0,48	1,25	0,69
	5	4	49	–	193	198	232	239	246	9	9	5	4	0,34	1,77	0,97
	3	2,5	60	228	199	192	247	268	267	10	16	3	2,5	0,42	1,42	0,78
	5	4	62	241	211	198	278	302	297	9	14	5	4	0,45	1,33	0,73
	5	4	77	246,5	204	198	267	302	303	10	20	5	4	0,45	1,33	0,73
	5	4	69	267	230	197	327	359	350	10	19	5	4	0,35	1,74	0,96
	5	4	93	274	215	197	310	361	355	14	28	5	4	0,38	1,58	0,87
190	3	3	50	–	204	207	241	246	251	7	10	3	3	0,45	1,33	0,73
	2,5	2	55	226	204	200	235	249	251	8	11	2,5	2	0,48	1,26	0,69
	5	4	50	–	205	210	247	254	260	9	10	5	4	0,33	1,84	1,01
	3	2,5	63	239	209	202	257	278	279	10	16	3	2,5	0,44	1,36	0,75
	5	4	64	255,5	224	207	298	322	318	9	14	5	4	0,43	1,38	0,76
	5	4	81	261	216	207	286	322	323	10	22	5	4	0,43	1,38	0,76
	6	5	72	278,9	240	210	341	378	364	10	21	6	5	0,35	1,74	0,96
	6	5	97	281	230	210	330	378	373	14	31	6	5	0,35	1,73	0,95

Tapered roller bearings

Single row to DIN/ISO

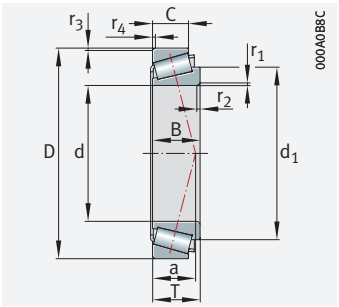

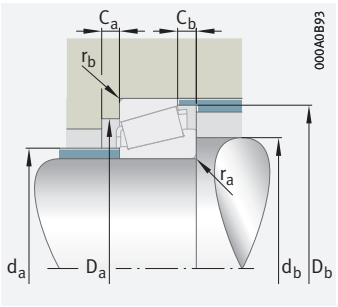

Mounting dimensions

d = 200 – 260 mm

Main dimensions					Basic load ratings		Fatigue limit load	Limiting speed	Speed rating	Mass	Designation	Interchange designation to ISO 10317 and ISO 355
d	D	B	C	T	dyn. C_r	stat. C_{0r}	C_{ur}	n_G	$n_{\vartheta r}$	m	➤580 | 1.12 ➤581 | 1.13 X-life ➤565	
					N	N	N	min^{-1}	min^{-1}	≈ kg		
200	270	34	27	37	310 000	550 000	64 000	2 460	1 530	5,5	**T4DB200**	T4DB200
	280	51	39	51	495 000	930 000	109 000	2 320	1 410	9,3	**32940-A**	T3EC200
	280	55	46	56	540 000	1 040 000	123 000	2 300	1 240	10,4	**T2ED200**	T2ED200
	310	70	53	70	900 000	1 380 000	179 000	2 500	1 280	18,7	**32040-X-XL**	T4FD200
	360	58	48	64	900 000	1 060 000	129 000	2 350	1 290	25,1	**30240-XL**	T4GB200
	360	98	82	104	1 570 000	2 080 000	260 000	2 230	1 080	42,8	**32240-XL**	T3GD200
	420	80	67	89	1 300 000	1 720 000	174 000	1 680	1 110	52,7	**30340**	–
	420	138	115	146	2 550 000	3 400 000	415 000	1 910	870	93	**32340-XL**	–
220	290	34	27	37	320 000	590 000	67 000	2 270	1 370	6	**T4DB220**	T4DB220
	300	51	39	51	590 000	990 000	127 000	2 600	1 280	10,1	**32944-XL**	T3EC220
	300	55	46	56	570 000	1 140 000	132 000	2 140	1 100	11,3	**T2ED220**	T2ED220
	340	76	57	76	1 060 000	1 640 000	207 000	2 290	1 130	24,2	**32044-X-XL**	T4FD220
	400	65	54	72	1 120 000	1 330 000	153 000	2 120	1 130	34,5	**30244-XL**	–
	400	108	90	114	1 820 000	2 550 000	310 000	1 980	920	59,2	**32244-XL**	–
	460	88	73	97	1 440 000	1 880 000	189 000	1 560	1 030	68	**30344**	–
	460	145	122	154	2 400 000	3 650 000	375 000	1 470	820	115	**32344**	–
240	320	39	30	42	480 000	730 000	90 000	2 500	–	8,3	**T4EB240-XL**	T4EB240
	320	51	39	51	600 000	1 050 000	133 000	2 420	1 160	11	**32948-XL**	T4EC240
	320	56	46	57	590 000	1 250 000	141 000	2 000	1 000	12,3	**T2EE240**	T2EE240
	360	76	57	76	1 060 000	1 680 000	210 000	2 150	1 060	25,8	**32048-X-XL**	T4FD240
	440	72	60	79	1 190 000	1 530 000	174 000	1 980	1 040	47	**30248-XL**	–
	440	120	100	127	2 190 000	3 100 000	370 000	1 790	810	80,6	**32248-XL**	–
	500	95	80	105	1 780 000	2 410 000	237 000	1 430	870	88,6	**30348**	–
	500	155	132	165	3 300 000	4 300 000	490 000	1 620	720	144	**32348-XL**	–
260	340	39	30	42	430 000	810 000	76 000	1 930	1 100	9,3	**T4DB260**	T4DB260
	360	63,5	48	63,5	890 000	1 500 000	185 000	2 150	1 000	18,6	**32952-XL**	T3EC260
	400	87	65	87	1 360 000	2 140 000	260 000	1 930	910	37,9	**32052-X-XL**	T4FC260
	480	80	67	89	1 730 000	2 090 000	229 000	1 740	860	62,8	**30252-XL**	–
	480	130	106	137	2 650 000	3 800 000	435 000	1 630	690	104	**32252-XL**	–
	540	102	85	113	2 290 000	2 600 000	280 000	1 600	820	105	**30352-XL**	–
	540	165	136	176	3 150 000	4 900 000	480 000	1 240	650	181	**32352**	–

medias *https://www.schaeffler.de/std/1F9A*

Dimensions					Mounting dimensions									Calculation factors		
d	r_1, r_2	r_3, r_4	a	d_1	d_a	d_b	D_a	D_a	D_b	C_a	C_b	r_a	r_b	e	Y	Y_0
	min.	min.	≈	≈	max.	min.	min.	max.	min.	min.	min.	max.	max.			
200	3	3	54	234	214	218	251	254	262	7	10	3	3	0,47	1,27	0,7
	3	2,5	54	239	216	212	257	268	271	9	12	3	2,5	0,39	1,52	0,84
	5	4	53	–	214	220	256	264	271	9	10	5	4	0,34	1,77	0,97
	3	2,5	67	253	221	212	273	298	297	11	17	3	2,5	0,43	1,39	0,77
	5	4	69	270	237	217	315	342	336	9	16	5	4	0,43	1,38	0,76
	5	4	83	269,5	226	217	302	342	340	11	22	5	4	0,41	1,48	0,81
	6	5	76	288	250	250	360	397	385	10	22	6	5	0,35	1,74	0,96
	6	5	104	298	240	258	344	397	392	17	31	6	5	0,36	1,67	0,92
220	3	3	60	255	233	238	270	276	282	7	10	3	3	0,51	1,17	0,64
	3	2,5	59	259,5	234	232	275	288	290	9	12	3	2,5	0,43	1,41	0,78
	5	4	53	–	235	240	277	284	290	9	10	5	4	0,32	1,87	1,03
	4	3	73	278,5	243	234	300	326	326	12	19	4	3	0,43	1,39	0,77
	5	4	75	296	255	237	348	382	371	10	18	5	4	0,42	1,43	0,79
	5	4	95	305	258	237	336	382	380	12	24	5	4	0,43	1,38	0,76
	6	5	82	321	274	240	392	437	418	10	24	6	5	0,35	1,74	0,96
	6	5	107	322	260	250	380	437	430	16	32	6	5	0,35	1,74	0,96
240	3	3	61	276	255	259	299	306	310	8	12	3	3	0,46	1,31	0,72
	3	2,5	65	280,5	254	252	294	308	311	9	12	3	2,5	0,46	1,31	0,72
	6	4	58	–	254	260	296	304	311	9	11	6	4	0,34	1,74	0,96
	4	3	79	298,5	261	254	318	346	346	12	19	4	3	0,46	1,31	0,72
	5	4	76	322,5	285	257	383	420	410	10	19	5	4	0,36	1,68	0,92
	5	4	105	334,5	286	257	372	422	415	14	27	5	4	0,43	1,38	0,76
	6	5	90	347,5	296	260	425	476	454	12	25	6	5	0,35	1,74	0,96
	6	5	115	351	285	260	411	476	465	16	32	6	5	0,35	1,74	0,96
260	3	3	68	297	274	279	318	326	330	8	12	3	3	0,49	1,23	0,67
	3	2,5	70	309	279	272	328	348	347	11	15,5	3	2,5	0,41	1,48	0,81
	5	4	86	327,5	287	278	352	382	383	14	22	5	4	0,43	1,38	0,76
	6	5	89	353,5	310	280	419	457	447	10	22	6	5	0,4	1,48	0,81
	6	5	113	366	306	280	401	457	455	14	31	6	5	0,43	1,39	0,77
	7,5	6	97	369,5	320	286	456	508	490	12	28	7,5	6	0,35	1,73	0,95
	7,5	6	124	–	310	286	450	513	500	16	40	7,5	6	0,35	1,74	0,96

Tapered roller bearings

Single row to DIN/ISO

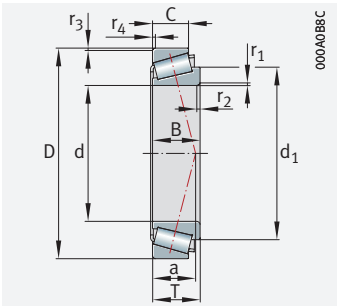

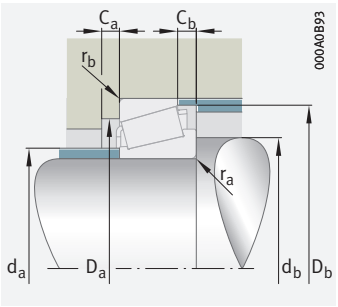

Mounting dimensions

d = 280 – 380 mm

Main dimensions					Basic load ratings		Fatigue limit load	Limiting speed	Speed rating	Mass	Designation	Interchange designation to ISO 10317 and ISO 355
d	D	B	C	T	dyn. C_r	stat. C_{0r}	C_{ur}	n_G	$n_{\vartheta r}$	m	➤*580*|*1.12* ➤*581*|*1.13* X-life ➤*565*	
					N	N	N	min^{-1}	min^{-1}	≈ kg		
280	380	63,5	48	63,5	880 000	1 520 000	185 000	2 030	940	19,8	**32956-XL**	T4EC280
	420	87	65	87	1 420 000	2 300 000	275 000	1 830	840	40,2	**32056-X-XL**	T4FC280
	500	80	67	89	1 740 000	2 130 000	233 000	1 670	830	66,5	**30256-XL**	–
	500	130	106	137	2 700 000	3 950 000	455 000	1 560	650	110	**32256-XL**	–
	580	108	90	119	2 700 000	3 250 000	340 000	1 470	690	136	**30356-XL**	–
	580	175	145	187	3 600 000	5 700 000	540 000	1 150	570	220	**32356**	–
300	420	76	57	76	1 170 000	2 040 000	242 000	1 820	810	31,2	**32960-XL**	T3FD300
	460	100	74	100	1 780 000	2 850 000	335 000	1 670	750	57,3	**32060-X-XL**	T4GD300
	540	85	71	96	2 020 000	2 440 000	260 000	1 550	750	83,7	**30260-XL**	–
	540	140	115	149	3 150 000	4 550 000	510 000	1 440	590	139	**32260-XL**	–
320	440	76	57	76	1 260 000	2 280 000	265 000	1 730	730	33	**32964-XL**	T3FD320
	480	100	74	100	1 850 000	3 050 000	355 000	1 580	690	60,6	**32064-X-XL**	T4GD320
	580	92	75	104	2 310 000	3 000 000	315 000	1 420	650	107	**30264-XL**	–
	580	150	125	159	3 550 000	5 200 000	570 000	1 330	530	170	**32264-XL**	–
340	460	76	57	76	1 270 000	2 370 000	275 000	1 650	690	35	**32968-XL**	T4FD340
360	480	76	57	76	1 260 000	2 370 000	270 000	1 580	660	36,3	**32972-XL**	T4FD360
380	560	112	84	112	2 370 000	3 900 000	430 000	1 350	560	88,3	**32076-XL**	–

medias *https://www.schaeffler.de/std/1F9A*

Dimensions					Mounting dimensions									Calculation factors		
d	r_1, r_2	r_3, r_4	a	d_1	d_a	d_b	D_a	D_a	D_b	C_a	C_b	r_a	r_b	e	Y	Y_0
	min.	min.	≈	≈	max.	min.	min.	max.	min.	min.	min.	max.	max.			
280	3	2,5	75	330	298	292	348	368	368	11	15,5	3	2,5	0,43	1,39	0,76
	5	4	91	347	305	298	370	402	402	14	22	5	4	0,46	1,31	0,72
	6	5	97	369,5	330	300	433	477	465	12	22	6	5	0,45	1,33	0,73
	6	5	118	384,5	322	300	418	477	475	14	31	6	5	0,45	1,34	0,73
	7,5	6	105	403,5	345	357	492	548	525	15	29	7,5	6	0,35	1,74	0,96
	7,5	6	132	–	335	306	480	552	540	16	41	7,5	6	0,35	1,74	0,96
300	4	3	80	359	324	314	383	406	405	12	19	4	3	0,39	1,52	0,84
	5	4	99	376	329	318	404	442	439	15	26	5	4	0,43	1,38	0,76
	6	5	103	391,5	340	352	468	517	500	15	25	6	5	0,43	1,38	0,76
	6	5	127	412,5	346	320	453	517	510	16	34	6	5	0,43	1,38	0,76
320	4	3	86	379	343	334	402	426	426	13	19	4	3	0,42	1,44	0,79
	5	4	104	398,5	350	338	424	462	461	15	26	5	4	0,46	1,31	0,72
	6	5	112	432,5	380	340	501	556	536	12	29	6	5	0,43	1,38	0,76
	6	5	136	443	372	340	486	556	555	16	34	6	5	0,43	1,38	0,76
340	4	3	91	404	361	354	421	446	446	12	19	4	3	0,44	1,37	0,75
360	4	3	97	383,8	380	374	439	466	466	14	19	4	3	0,46	1,31	0,72
380	6	5	125	463,5	402	422	494	538	538	16	28	6	5	0,47	1,26	0,69

Tapered roller bearings

Single row to ANSI/ABMA

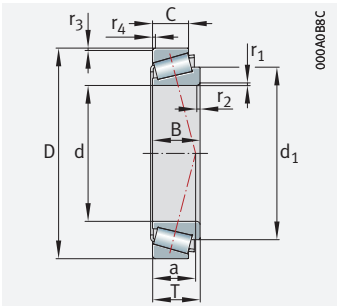

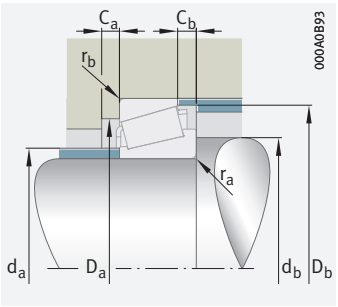

Mounting dimensions

d = 15,875 – 34,925 mm

Main dimensions					Basic load ratings		Fatigue limit load	Limiting speed	Mass	Designation
d	D	B	C	T	dyn. C_r	stat. C_{0r}	C_{ur}	n_G	m	➤580|1.12 ➤581|1.13 X-life ➤565
					N	N	N	min^{-1}	≈ kg	
15,875	42,863	14,287	9,525	14,288	17 900	18 000	1 920	18 800	0,107	**K11590-11520**
17,462	39,878	14,605	10,668	13,843	21 200	20 800	2 240	20 100	0,083	**KLM11749-LM11710**
19,05	45,237	16,637	12,065	15,494	28 000	28 000	3 100	17 800	0,121	**KLM11949-LM11910**
21,43	50,005	18,288	13,97	17,526	37 500	39 000	4 500	15 800	0,169	**KM12649-M12610**
21,986	45,237	16,637	12,065	15,494	28 500	32 000	3 600	16 900	0,118	**KLM12749-LM12710**
	45,974	16,637	12,065	15,494	28 500	32 000	3 600	16 900	0,123	**KLM12749-LM12711**
22,606	47	15,5	12	15,5	23 700	27 000	2 900	16 300	0,129	**KLM72849-LM72810**
25,4	50,292	14,732	10,668	14,224	26 000	29 500	3 250	15 200	0,129	**KL44643-L44610**
	56,896	19,837	15,875	19,368	43 000	46 500	5 400	14 200	0,243	**K1780-1729**
26,988	50,292	14,732	10,668	14,224	26 000	29 500	3 250	15 200	0,119	**KL44649-L44610**
	63,5	20,638	15,875	20,638	47 500	55 000	6 500	12 100	0,319	**K15106-15250-X**
28,575	57,15	19,355	15,875	19,845	48 000	55 000	6 600	13 100	0,234	**K1985-1922**
	57,15	19,355	15,875	19,845	48 000	55 000	6 600	13 100	0,267	**K1988-1922**
	59,131	16,764	11,811	15,875	34 000	40 000	4 550	12 800	0,207	**KLM67043-LM67010**
	72,626	24,257	17,463	24,608	56 000	53 000	6 200	10 500	0,492	**K41125-41286**
30,162	64,292	21,433	16,67	21,433	52 000	67 000	8 100	11 500	0,373	**KM86649-M86610**
31,75	59,131	16,764	11,811	15,875	34 000	40 000	4 550	12 800	0,187	**KLM67047-LM67010**
	59,131	16,764	11,811	15,875	34 000	40 000	4 550	12 800	0,187	**KLM67048-LM67010**
	59,131	16,764	11,811	15,875	34 000	40 000	4 550	12 800	0,19	**KLM67049-A-LM67010**
	61,986	16,764	11,811	15,875	34 000	40 000	4 550	12 800	0,212	**KLM67048-LM67014**
	73,025	27,782	23,02	29,37	72 000	97 000	12 400	9 900	0,641	**KHM88542-HM88510**
	76,2	28,575	23,02	29,37	79 000	107 000	13 700	9 400	0,705	**KHM89440-HM89411**
33,338	68,262	22,225	17,462	22,225	56 000	72 000	8 800	10 700	0,382	**KM88048-M88010**
	73,025	27,783	23,02	29,37	72 000	97 000	12 400	9 900	0,601	**KHM88547-HM88510**
	76,2	28,575	23,02	29,37	79 000	107 000	13 600	8 800	0,757	**KHM89443-HM89410**
34,925	65,088	18,288	13,97	18,034	46 500	56 000	6 600	11 500	0,261	**KLM48548-A-LM48510**
	65,088	18,288	13,97	18,034	46 500	56 000	6 600	11 500	0,248	**KLM48548-LM48510**
	65,088	18,288	13,97	18,034	46 500	56 000	6 400	10 500	0,278	**KLM48549-X-LM48510**
	72,233	25,4	19,842	25,4	68 000	91 000	11 500	10 000	0,5	**KHM88649-HM88610**
	73,025	24,608	19,05	23,812	78 000	78 000	12 600	12 500	0,462	**K25877-25821-XL**
	76,2	28,575	23,812	29,37	77 000	91 000	11 100	9 400	0,636	**K31594-31520**
	76,2	28,575	23,02	29,37	79 000	107 000	13 700	9 400	0,65	**KHM89446-HM89410**
	79,375	29,771	23,813	29,37	90 000	110 000	13 600	8 800	0,785	**K3478-3420**

medias *https://www.schaeffler.de/std/1F9A*

Dimensions					Mounting dimensions								Calculation factors		
d	r_1, r_2	r_3, r_4	a	d_1	d_a	d_b	D_a	D_b	C_a	C_b	r_a	r_b	e	Y	Y_0
	min.	min.	≈	≈	max.	min.	min.	min.	min.	min.	max.	max.			
15,875	1,5	1,5	13	32,1	22,5	24,5	34,5	39,5	2	4,5	1,5	1,5	0,7	0,85	0,47
17,462	1,3	1,3	9	29,6	21,5	23	34	37	3	3	1,3	1,3	0,29	2,1	1,15
19,05	1,3	1,3	10	31,8	23,5	25	39,5	41,5	3,5	4,5	1,3	1,3	0,3	2	1,1
21,43	1,3	1,3	11	34,5	25,5	27,5	44	46	4	3,5	1,3	1,3	0,28	2,16	1,19
21,986	1,3	1,3	10	34,8	26	27,5	39,5	42	3	3	1,3	1,3	0,31	1,96	1,08
	1,3	1,3	10	34,8	26	27,5	40	42,5	3	3	1,3	1,3	0,31	1,96	1,08
22,606	1,5	1	13	–	28	30	40,5	44	2	3	1,5	1	0,47	1,27	0,7
25,4	1,3	1,3	11	39,5	30	32	44,5	47	3	3,5	1,3	1,3	0,37	1,6	0,88
	0,8	1,3	13	39,8	30	30,5	49	51	2	3	0,8	1,3	0,31	1,95	1,07
26,988	3,6	1,3	11	40,1	31	37,5	44,5	47	2,5	3,5	3,6	1,3	0,37	1,6	0,88
	0,8	1,5	15	46,75	32,5	33,5	55	59	3	3,5	0,8	1,5	0,35	1,71	0,94
28,575	0,8	1,5	14	43	33,5	34	51	53,5	3	3,5	0,8	1,5	0,33	1,82	1
	3,6	1,5	14	43	33,5	39,5	51	53,5	3	4	3,6	1,5	0,33	1,82	1
	4,8	1,3	13	–	34	40,5	52	56	3	4	4,8	1,3	0,41	1,46	0,8
	4,8	1,5	21	50,8	36,5	48	61	68	4	6,5	4,8	1,5	0,6	0,99	0,55
30,162	1,5	1,5	18	50,7	38	44	54	60	3	4,5	1,5	1,5	0,55	1,1	0,6
31,75	2,3	1,3	13	–	36,5	42,5	52	56	3	4	2,3	1,3	0,41	1,46	0,8
	3,6	1,3	13	45,8	36	42,5	52	56	3,5	4,5	3,6	1,3	0,41	1,46	0,8
	0,8	1,3	13	45,8	36	37	52	56	3	4	0,8	1,3	0,41	1,46	0,8
	3,6	1,3	13	45,8	36	42,5	52	56	3,5	4,5	3,6	1,3	0,41	1,46	0,8
	1,3	3,3	24	58	42,6	45,5	59	70	4	6	1,3	3,3	0,55	1,1	0,6
	0,8	0,8	24	–	44,5	45,5	65	73	3	6	0,8	0,8	0,55	1,1	0,6
33,338	0,8	1,5	20	53,25	41	42,5	58	65	3	4	0,8	1,5	0,55	1,1	0,6
	0,8	3,3	24	56,8	42,6	45,5	59	70	4	6	0,8	3,3	0,55	1,1	0,6
	0,8	3,3	24	60,5	44,5	46,5	62	73	3	5,5	0,8	3,3	0,55	1,1	0,6
34,925	0,8	1,3	14	–	41,5	48	58	61	3	4	0,8	1,3	0,38	1,59	0,88
	3,6	1,3	14	49,7	41,5	48	58	61	3	4	3,6	1,3	0,38	1,59	0,88
	2,3	1,3	14	49,7	40	42	58	61	3	4	2,3	1,3	0,38	1,59	0,88
	2,3	2,3	21	56,8	42,5	48,5	60	69	3	5	2,3	2,3	0,55	1,1	0,6
	1,5	0,8	16	–	43	46	62	67	5	4	1,5	0,8	0,29	2,07	1,14
	1,5	3,3	22	57,2	43,5	46	64	72	2	5	1,5	3,3	0,4	1,49	0,82
	3,6	3,3	24	59,8	43	49	62	72	3	6	3,6	3,3	0,55	1,1	0,6
	3,6	3,3	21	57,5	43,5	50	67	74	2	5	3,6	3,3	0,37	1,64	0,9

Tapered roller bearings

Single row to ANSI/ABMA

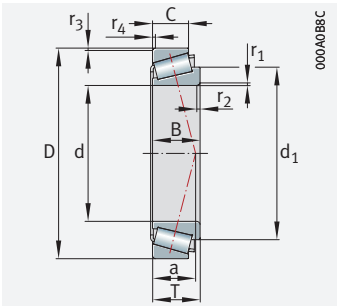

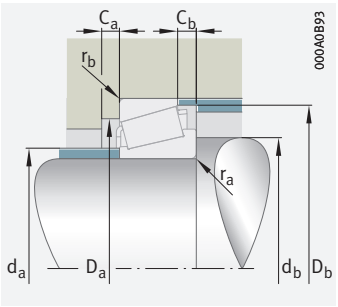

Mounting dimensions

d = 34,988 – 41,275 mm

Main dimensions					Basic load ratings		Fatigue limit load	Limiting speed	Mass	Designation
d	D	B	C	T	dyn. C_r	stat. C_{0r}	C_{ur}	n_G	m	➤580 | 1.12 ➤581 | 1.13 X-life ➤565
					N	N	N	min^{-1}	≈ kg	
34,988	59,131	16,764	11,938	15,875	34 000	44 500	5 100	12 400	0,17	**KL68149-L68110**
	59,974	16,764	11,938	15,875	34 000	44 500	5 100	12 400	0,17	**KL68149-L68111**
	61,973	17	13,6	16,7	38 000	49 000	5 900	11 800	0,2	**KLM78349-LM78310-A**
	61,973	17	15	18	38 000	49 000	5 900	11 800	0,215	**KLM78349-A-LM78310-C**
35,717	72,233	25,4	19,842	25,4	68 000	91 000	11 500	10 000	0,54	**KHM88648-HM88610**
36,512	76,2	28,575	23,02	29,37	79 000	107 000	13 700	9 400	0,65	**KHM89448-HM89410**
	76,2	28,575	23,02	29,37	79 000	107 000	13 700	9 400	0,717	**KHM89449-HM89410**
	76,2	28,575	23,02	29,37	79 000	107 000	13 600	8 800	0,63	**KHM89449-HM89411**
	79,375	28,829	22,664	29,37	92 000	111 000	13 900	9 200	0,679	**KHM89249-HM89210**
38	63	17	13,5	17	39 500	53 000	6 200	11 400	0,204	**KJL69349-JL69310**
38,1	65,088	18,288	13,97	18,034	45 000	60 000	7 100	11 200	0,227	**KLM29748-LM29710**
	65,088	18,288	13,97	18,034	45 000	60 000	7 100	11 200	0,239	**KLM29749-LM29710**
	65,088	18,288	15,748	19,812	45 000	60 000	6 900	10 500	0,262	**KLM29749-LM29711**
	79,375	29,771	23,813	29,37	90 000	110 000	13 600	8 800	0,677	**K3490-3420**
	82,55	28,575	23,02	29,37	89 000	122 000	15 500	7 800	0,77	**KHM801346-HM801310**
	90,488	40,386	33,338	39,688	142 000	185 000	23 700	8 000	1,33	**K4375-4335**
39,688	79,974	30,391	23,812	29,37	94 000	109 000	13 700	9 200	0,731	**K3382-3325**
	79,974	30,391	23,812	29,37	94 000	109 000	13 700	9 200	0,534	**K3386-3325**
	80,167	30,391	23,812	29,37	94 000	109 000	13 700	9 200	0,66	**K3382-3320**
	80,167	30,391	23,812	29,37	94 000	109 000	13 700	9 200	0,537	**K3386-3320**
40,483	82,55	28,575	23,02	29,37	89 000	122 000	15 200	8 700	0,724	**KHM801349-HM801310**
40,987	67,975	18	13,5	17,5	46 000	63 000	7 500	10 700	0,246	**KLM300849-LM300811**
	78	18	13,5	17,5	46 000	63 000	7 500	10 700	0,392	**KLM300849-LM300816**
41,275	73,431	19,812	14,732	19,558	55 000	68 000	8 300	10 000	0,334	**KLM501349-LM501310**
	73,431	19,812	16,604	21,43	55 000	68 000	8 300	10 000	0,366	**KLM501349-LM501314**
	80	22,403	21	24,176	64 000	70 000	8 400	9 400	0,498	**K336-332-A**
	82,55	25,654	20,193	26,543	83 000	111 000	14 100	8 700	0,65	**KM802048-M802011**
	87,313	30,886	23,812	30,163	97 000	121 000	15 200	8 500	0,85	**K3585-3525**
	88,5	29,083	22,225	26,988	89 000	98 000	12 000	8 900	0,79	**K419-414**
	88,9	29,37	23,02	30,162	93 000	123 000	15 700	8 000	0,938	**KHM803146-HM803110**
	90	22,225	15,875	20	72 000	84 000	10 100	8 400	0,648	**K365-A-362**
	93,662	31,75	26,195	31,75	110 000	142 000	17 900	7 900	1,12	**K46162-46368**
	95,25	29,37	23,02	30,162	111 000	151 000	19 300	7 500	1,19	**KHM804840-HM804810**

medias *https://www.schaeffler.de/std/1F9A*

Dimensions					Mounting dimensions								Calculation factors		
d	r_1, r_2	r_3, r_4	a	d_1	d_a	d_b	D_a	D_b	C_a	C_b	r_a	r_b	e	Y	Y_0
	min.	min.	≈	≈	max.	min.	min.	min.	min.	min.	max.	max.			
34,988	3,6	1,3	13	48,8	40	42	52	56	3	4	3,6	1,3	0,42	1,44	0,79
	3,6	1,3	13	48,8	40	42	52	56	3	4	3,6	1,3	0,42	1,44	0,79
	3,6	1,5	14	49,7	40	46	54	59	3	3	3,6	1,5	0,44	1,35	0,74
	1,5	1,5	16	–	39,5	42	56	59	3	3	1,5	1,5	0,44	1,35	0,74
35,717	3,5	2,3	21	–	43	52	60	69	4	5,5	3,5	2,3	0,55	1,1	0,6
36,512	0,8	3,3	24	60,5	44,5	48,5	62	73	3	6	0,8	3,3	0,55	1,1	0,6
	3,6	3,3	24	60,5	44,5	54	62	73	3	5,5	3,6	3,3	0,55	1,1	0,6
	3,6	0,8	24	60,5	44,5	54	65	73	3	5	3,6	0,8	0,55	1,1	0,6
	3,6	3,3	23	59,3	44	55	66	75	3	6,7	3,6	3,3	0,55	1,1	0,6
38	3,6	1,3	15	51,8	42,5	49	56	60	3	4	3,6	1,3	0,42	1,44	0,79
38,1	3,6	1,3	13	53	42,5	49	59	62	2	4	3,6	1,3	0,33	1,8	0,99
	2,3	1,3	13	53	42,5	46	59	62	2	4	2,3	1,3	0,33	1,8	0,99
	2,3	1,3	15	53	42,5	46	58	62	2	4	2,3	1,3	0,33	1,8	0,99
	3,6	3,3	21	57,5	45,5	52	67	74	2	5	3,6	3,3	0,37	1,64	0,9
	0,8	3,3	24	64,25	49,1	51	68	78	5	6	0,8	3,3	0,55	1,1	0,6
	1,5	3,3	25	–	51	53	77	85	3,5	6,3	1,5	3,3	0,28	2,11	1,16
39,688	3,6	3,3	19	57	45,5	52	70	75	2	6	3,6	3,3	0,27	2,2	1,21
	0,8	3,3	19	–	45,5	46,5	70	75	2	6	0,8	3,3	0,27	2,2	1,21
	3,6	3,3	19	57	45,5	52	70	75	2	6	3,6	3,3	0,27	2,2	1,21
	0,8	3,3	19	–	45,5	46,5	70	75	2	6	0,8	3,3	0,27	2,2	1,21
40,483	3,6	3,3	24	65,6	49	58	68	78	3	6	3,6	3,3	0,55	1,1	0,6
40,987	3,6	1,5	14	55,8	45	52	61	65	3	4	3,6	1,5	0,35	1,72	0,95
	3,6	0,3	14	55,8	45	52	61	65	5	4	3,6	0,3	0,35	1,72	0,95
41,275	3,6	0,8	16	57,2	46,5	53	67	70	4	4,5	3,6	0,8	0,4	1,5	0,83
	3,6	0,8	18	57,2	46,5	53	66	70	1,5	4,5	3,6	0,8	0,4	1,5	0,83
	0,8	2,3	18	–	46	47	71	75	2	6	0,8	2,3	0,27	2,21	1,21
	3,6	3,3	23	64,15	51	57	70	79	3	5,5	3,6	3,3	0,55	1,1	0,6
	1,5	3,3	20	64,5	48	50	75	81	3,5	6	1,5	3,3	0,31	1,96	1,08
	3,6	1,5	17	–	47	54	77	80	5	6	3,6	1,5	0,26	2,27	1,25
	3,6	3,3	26	69,5	52	57	70	84	4	7	3,6	3,3	0,55	1,1	0,6
	3,6	2	16	–	48,5	55	81	84	5	5,5	3,6	2	0,32	1,88	1,03
	0,8	3,3	24	–	51	52	79	87	3,5	5,5	0,8	3,3	0,4	1,49	0,82
	3,6	3,3	26	73,1	54	61	81	91	4,5	7	3,6	3,3	0,55	1,1	0,6

Tapered roller bearings

Single row to ANSI/ABMA

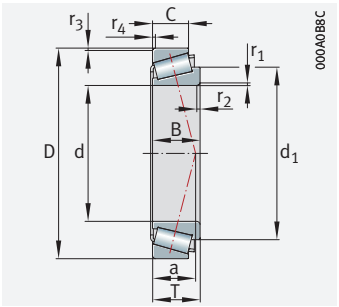

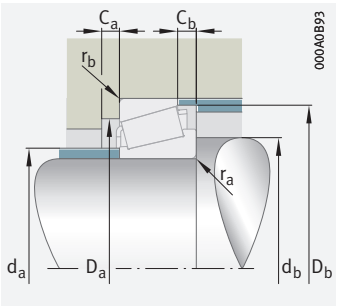

Mounting dimensions

d = 42,07 – 47,625 mm

Main dimensions					Basic load ratings		Fatigue limit load	Limiting speed	Mass	Designation
d	D	B	C	T	dyn. C_r	stat. C_{0r}	C_{ur}	n_G	m	➤580 | 1.12 ➤581 | 1.13 X-life ➤565
					N	N	N	min^{-1}	≈ kg	
42,07	90,488	40,386	33,338	39,688	142 000	185 000	23 200	7 800	1,29	**K4395-4335**
44,45	82,931	25,4	19,05	23,812	81 000	105 000	13 100	8 900	0,583	**K25581-25520**
	88,9	29,37	23,02	30,162	93 000	123 000	15 700	8 000	0,86	**KHM803149-HM803110**
	90,119	21,692	21,808	23	74 000	86 000	10 400	8 400	0,694	**K355-X-352**
	93,264	30,302	23,812	30,162	123 000	138 000	22 700	9 300	0,97	**K3782-3720-XL**
	93,662	31,75	25,4	31,75	109 000	130 000	16 100	7 400	1,02	**K49175-49368**
	95,25	28,575	22,225	27,783	131 000	145 000	23 800	9 100	1	**AK33885-33822-XL**
	95,25	29,37	23,02	30,162	111 000	151 000	19 300	7 500	1,13	**KHM804842-HM804810**
	95,25	29,37	23,02	30,162	111 000	151 000	19 300	7 500	1,16	**KHM804843-HM804810**
	95,25	28,575	22,225	30,958	99 000	120 000	14 700	7 500	1,04	**KHM903249-HM903210**
	101,6	31,75	25,4	31,75	108 000	132 000	17 800	7 200	1,27	**K49576-49520**
	104,775	36,512	28,575	36,512	145 000	201 000	25 000	6 300	1,68	**KHM807040-HM807010**
	111,125	36,957	30,162	38,1	146 000	186 000	23 500	6 900	1,88	**K535-532-A**
44,987	104,986	31,75	23,368	32,512	116 000	157 000	19 600	6 600	1,43	**KHM905843-HM905810**
45,242	73,431	19,812	15,748	19,558	57 000	79 000	9 700	9 700	0,316	**KLM102949-LM102910**
	77,788	19,842	15,08	19,842	55 000	69 000	8 400	9 300	0,37	**KLM603049-LM603011**
	77,788	19,842	16,667	21,43	55 000	69 000	8 400	9 300	0,38	**KLM603049-LM603012**
	80	19,842	15,08	19,842	55 000	69 000	8 400	9 300	0,399	**KLM603049-LM603014**
45,618	83,058	25,4	19,114	23,877	81 000	105 000	13 200	8 900	0,567	**K25590-25522**
45,987	74,975	18	14	18	48 500	67 000	8 000	9 600	0,3	**KLM503349-A-LM503310**
	74,975	18	14	18	48 500	67 000	8 000	9 600	0,304	**KLM503349-LM503310**
	90,975	32	26,5	32	117 000	146 000	18 400	7 900	0,958	**KHM204049-HM204010**
46,038	85	21,692	17,462	20,635	74 000	86 000	10 400	8 800	0,694	**K359-S-354-X**
47,625	88,9	22,225	16,513	20,637	72 000	84 000	10 100	8 400	0,559	**K369-A-362-A**
	88,9	22,225	16,513	20,637	72 000	84 000	10 100	8 400	0,556	**K369-S-362-A**
	95,25	29,37	23,02	30,162	111 000	151 000	19 300	7 500	1,09	**KHM804846-HM804810**
	96,838	21,946	15,875	21	76 000	95 000	11 500	7 500	0,725	**K386-A-382-A**
	112,713	28,575	20,638	30,163	102 000	133 000	16 400	6 300	1,5	**KHM907639-HM907616**

medias *https://www.schaeffler.de/std/1F9A*

Dimensions					Mounting dimensions								Calculation factors		
d	r_1, r_2	r_3, r_4	a	d_1	d_a	d_b	D_a	D_b	C_a	C_b	r_a	r_b	e	Y	Y_0
	min.	min.	≈	≈	max.	min.	min.	min.	min.	min.	max.	max.			
42,07	3,6	3,3	25	66	51	55	74	84	5	6	3,6	3,3	0,28	2,11	1,16
44,45	0,5	0,8	18	63,7	51	55	74	77	4,5	5	0,5	0,8	0,33	1,79	0,99
	3,6	3,3	26	69,1	53	62	74	85	4	7	3,6	3,3	0,55	1,1	0,6
	3,6	2,3	18	63,2	50	56	78	82	2	2,5	3,6	2,3	0,31	1,96	1,08
	3,6	3,3	22	72,2	52	58	82	88	3,5	7	3,6	3,3	0,34	1,77	0,97
	3,6	3,3	23	67,2	53	59	82	87	3	5,5	3,6	3,3	0,36	1,67	0,92
	0,8	0,8	20	73,4	53	53	86	90	5,5	6,5	0,8	0,8	0,33	1,82	1
	3,6	3,3	26	73,1	54	61	81	91	4,5	7	3,6	3,3	0,55	1,1	0,6
	3,6	3,3	26	73,1	57	63	81	91	4,5	7	3,6	3,3	0,55	1,1	0,6
	3,6	0,8	31	72	54	65	81	91	2	6,5	3,6	0,8	0,74	0,81	0,45
	0,8	3,3	25	–	54	55	88	96	4	6,5	0,8	3,3	0,4	1,5	0,82
	3,6	3,3	29	80,35	59	66	91	100	6	7,5	3,6	3,3	0,49	1,23	0,68
	3,6	3,3	26	78,1	54	60	95	100	2,5	8	3,6	3,3	0,3	2,02	1,11
44,987	2,5	2,5	34	82,2	60	68	86	100	3	7	2,5	2,5	0,78	0,77	0,42
45,242	3,6	0,8	15	60	50	56	68	70	3	4	3,6	0,8	0,31	1,97	1,08
	3,6	0,8	18	61,7	50	57	71	74	3	4,5	3,6	0,8	0,43	1,41	0,77
	3,6	0,8	19	61,7	50	57	70	74	2	4,5	3,6	0,8	0,43	1,41	0,77
	3,6	0,8	18	61,7	50	57	71	75	3	4,5	3,6	0,8	0,43	1,41	0,77
45,618	3,6	2	18	64,1	51	58	73	77	4,5	4,5	3,6	2	0,33	1,79	0,99
45,987	3,6	1,5	16	62	51	57	67	71	3,5	4	3,6	1,5	0,4	1,49	0,82
	2,3	1,5	16	61,9	51	55	67	71	4	3,5	2,3	1,5	0,4	1,49	0,82
	3,6	3,6	22	67,5	54	63	79	86	4	4	3,6	3,6	0,33	1,8	0,99
46,038	2,3	1,5	16	63,2	51	55	77	80	3	3	2,3	1,5	0,31	1,96	1,08
47,625	3,6	1,3	16	68,6	53	60	81	84	5	5,5	3,6	1,3	0,32	1,88	1,03
	2,3	1,3	16	68,1	53	60	81	84	5	5,5	2,3	1,3	0,32	1,88	1,03
	3,6	3,3	26	73,1	57	66	81	91	4,5	7	3,6	3,3	0,55	1,1	0,6
	0,8	0,8	19	–	55	56	89	92	5,5	5	0,8	0,8	0,35	1,69	0,93
	3,6	3,3	37	–	65,3	72	91	106	4	10	3,6	3,3	0,88	0,68	0,37

Tapered roller bearings

Single row to ANSI/ABMA

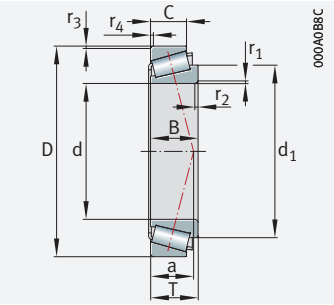

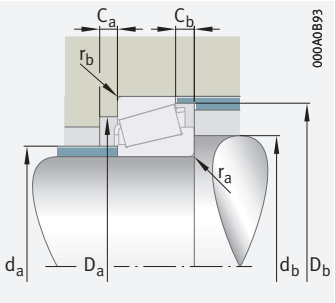

Mounting dimensions

d = 48,412 – 55 mm

Main dimensions					Basic load ratings		Fatigue limit load	Limiting speed	Mass	Designation
d	D	B	C	T	dyn. C_r	stat. C_{0r}	C_{ur}	n_G	m	➤580 | 1.12 ➤581 | 1.13 X-life ➤565
					N	N	N	min^{-1}	≈ kg	
48,412	95,25	29,37	23,02	30,162	111 000	151 000	19 300	7 500	1,366	**KHM804848-HM804810**
	95,25	29,37	23,02	30,162	111 000	151 000	19 100	7 000	1,089	**KHM804848-HM804811**
	95,25	29,37	23,02	30,162	111 000	151 000	19 300	7 500	1,089	**KHM804849-HM804810**
49,212	104,775	36,512	28,575	36,512	145 000	201 000	26 000	6 700	1,498	**KHM807044-HM807010**
50	90	28	23	28	104 000	136 000	17 300	7 900	0,75	**KJM205149-JM205110**
50,8	82,55	22,225	16,51	21,59	69 000	94 000	11 700	8 700	0,428	**KLM104949-LM104911**
	82,931	22,225	16,51	21,59	69 000	94 000	11 500	7 800	0,432	**KLM104949-LM104912**
	88,9	22,225	16,513	20,637	72 000	84 000	10 100	8 400	0,516	**K368-362-A**
	88,9	22,225	16,513	20,637	72 000	84 000	9 900	7 400	0,341	**K368-A-362-A**
	93,264	30,302	23,812	30,162	104 000	137 000	17 000	7 000	0,89	**K3780-3720**
	95,25	28,575	22,225	27,783	107 000	138 000	17 500	7 500	0,861	**K33889-33822**
	104,775	30,958	23,813	30,162	126 000	162 000	20 500	6 800	0,835	**K45284-45220**
	104,775	36,512	28,575	36,512	145 000	201 000	25 500	6 300	1,54	**KHM807046-HM807010**
	104,775	36,512	28,575	36,512	145 000	201 000	26 000	6 700	1,494	**KHM807046-HM807011**
	104,775	40,157	33,338	39,688	159 000	226 000	29 000	6 700	1,668	**K4580-4535**
	107,95	36,957	28,575	36,512	146 000	186 000	23 500	6 900	1,584	**K537-532-X**
	111,125	28,575	20,638	30,163	102 000	133 000	16 400	6 300	1,4	**KHM907643-HM907614**
	123,825	32,791	25,4	36,512	135 000	150 000	18 300	6 000	2,18	**K72200-72487**
51,593	88,9	22,225	16,513	20,637	72 000	84 000	10 100	8 400	0,509	**K368-S-362-A**
	90	22,225	20	20	72 000	84 000	10 100	8 400	0,545	**K368-S-363**
53,975	88,9	19,05	13,492	19,05	69 000	78 000	12 300	9 700	0,434	**KLM806649-LM806610-XL**
	95,25	28,575	22,225	27,783	107 000	138 000	17 500	7 500	0,806	**K33895-33822**
	104,775	36,512	28,575	36,512	145 000	201 000	25 500	6 300	1,42	**KHM807049-HM807010**
	123,825	32,791	25,4	36,512	135 000	150 000	18 300	6 000	1,98	**K72212-72487**
54,488	104,775	36,512	28,575	36,512	145 000	201 000	25 500	6 700	1,42	**KHM807048-HM807010**
55	95	29	23,5	29	111 000	152 000	19 300	7 400	0,84	**KJM207049-JM207010**
	96,838	21,946	15,875	21	76 000	95 000	11 500	7 500	0,63	**K385-X-382-A**

medias *https://www.schaeffler.de/std/1F9A*

Dimensions					Mounting dimensions								Calculation factors		
d	r_1, r_2	r_3, r_4	a	d_1	d_a	d_b	D_a	D_b	C_a	C_b	r_a	r_b	e	Y	Y_0
	min.	min.	≈	≈	max.	min.	min.	min.	min.	min.	max.	max.			
48,412	2,3	3,3	26	73,1	57	63	81	91	4,5	7	2,3	3,3	0,55	1,1	0,6
	2,3	0,8	26	73,1	57	63	83	91	4,5	7	2,3	0,8	0,55	1,1	0,6
	3,6	3,3	26	73,1	57	66	81	91	4,5	7	3,6	3,3	0,55	1,1	0,6
49,212	3,6	3,3	29	80,35	63	69	91	100	6	7,5	3,6	3,3	0,49	1,23	0,68
50	3	2,5	20	70,1	57	62	80	85	4,5	5	3	2,5	0,33	1,82	1
50,8	3,6	1,3	16	66,3	55	62	75	78	3	5	3,6	1,3	0,31	1,97	1,08
	3,6	1,3	16	66,3	55	62	75	78	3	4	3,6	1,3	0,31	1,97	1,08
	1,5	1,3	16	68,6	56	58	81	84	5	5,5	1,5	1,3	0,32	1,88	1,03
	3,6	1,3	16	69	56	59	81	84	5	5,5	3,6	1,3	0,32	1,88	1,03
	3,6	3,3	22	72,3	58	64	82	88	3,5	7	3,6	3,3	0,34	1,77	0,97
	3,6	0,8	20	73,1	58	64	86	90	5,5	6,5	3,6	0,8	0,33	1,82	1
	6,4	3,3	22	79,6	59	71	93	99	4	6	6,4	3,3	0,33	1,81	0,99
	3,6	3,3	29	80,35	63	70	89	100	4	6	3,6	3,3	0,49	1,23	0,68
	3,6	0,8	29	80,35	63	70	91	100	4	6	3,6	0,8	0,49	1,23	0,68
	3,6	3,3	28	80,3	61	67	90	99	4	6	3,6	3,3	0,34	1,79	0,98
	3,6	3,3	24	78,1	59	65	94	100	4	7,5	3,6	3,3	0,3	2,02	1,11
	3,6	3,3	37	–	65,3	74	91	105	4	10	3,6	3,3	0,88	0,68	0,37
	3,6	3,2	38	86,8	67	79	102	116	3,5	8,5	3,6	3,2	0,74	0,81	0,45
51,593	2	1,3	16	–	56	59	81	84	5	5,5	2	1,3	0,32	1,88	1,03
	2	0,8	16	–	56	59	81	84	5	5,5	2	0,8	0,32	1,88	1,03
53,975	2,3	2	22	–	61	64	78	84	4	5	2,3	2	0,55	1,1	0,6
	1,5	0,8	20	73,1	60	63	86	90	5,5	6,5	1,5	0,8	0,33	1,82	1
	3,6	3,3	29	80,35	63	73	89	100	6	7,5	3,6	3,3	0,49	1,23	0,68
	3,6	3,2	38	86,75	67	79	102	116	3,5	8,5	3,6	3,2	0,74	0,81	0,45
54,488	3,6	3,3	29	81	63	73	91	100	4	6	3,6	3,3	0,49	1,23	0,68
55	1,5	2,5	21	75,2	62	65	84	91	5	5,5	1,5	2,5	0,33	1,79	0,99
	3,5	0,8	19	75,7	61	67	89	92	5,5	5	3,5	0,8	0,35	1,69	0,93

Tapered roller bearings

Single row to ANSI/ABMA

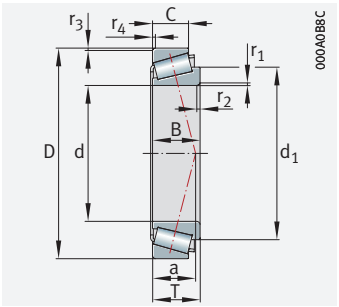

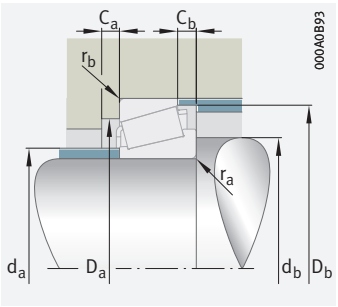

Mounting dimensions

d = 57,15 – 65,088 mm

Main dimensions					Basic load ratings		Fatigue limit load	Limiting speed	Mass	Designation
d	D	B	C	T	dyn. C_r	stat. C_{0r}	C_{ur}	n_G	m	➤*580*|*1.12* ➤*581*|*1.13* X-life ➤*565*
					N	N	N	min^{-1}	≈ kg	
57,15	87,312	18,258	14,288	18,258	56 000	88 000	10 400	7 400	0,4	**KL507949-L507910**
	96,838	21,945	15,875	21	76 000	95 000	11 200	6 700	0,6	**K387-382-A**
	96,838	21,946	15,875	21	76 000	95 000	11 500	7 500	0,59	**K387-A-382-A**
	96,838	21,946	20,274	25,4	76 000	95 000	11 200	6 700	0,66	**K387-A-382-S**
	98,425	21,946	17,826	21	76 000	95 000	11 500	7 500	0,637	**K387-A-382**
	104,775	29,317	24,605	30,162	111 000	141 000	17 000	6 300	1,07	**K462-453-X**
	104,775	29,317	24,605	30,163	111 000	141 000	17 300	6 900	1,08	**K462-A-453-X**
	110	29,317	27	27,795	111 000	141 000	17 300	6 900	1,26	**K462-454**
	112,712	30,162	23,812	30,162	137 000	192 000	24 300	6 200	1,333	**K39580-39520**
	112,712	30,162	23,812	30,162	137 000	192 000	24 300	6 200	1,351	**K39581-39520**
	112,712	30,048	23,812	30,162	119 000	176 000	22 400	6 300	1,44	**K3979-3920**
	117,475	30,162	23,812	30,162	124 000	189 000	24 500	5 900	1,62	**K33225-33462**
	119,985	30,162	26,949	32,75	137 000	192 000	24 300	6 200	1,76	**K39580-39528**
59,987	130,175	30,924	23,812	34,1	146 000	171 000	20 100	5 400	2,05	**KHM911244-HM911210**
60,325	122,238	38,354	29,718	38,1	193 000	255 000	32 000	5 600	2,09	**KHM212044-HM212011**
	130,175	33,338	23,813	36,513	146 000	171 000	21 200	5 300	2,045	**KHM911245-HM911210**
61,913	110	21,996	18,824	22	86 000	115 000	13 800	6 600	0,886	**K392-394-A**
	146,05	39,688	25,4	41,275	199 000	236 000	29 000	4 800	3,37	**KH913842-H913810**
62,738	101,6	25,4	19,845	25,4	91 000	135 000	17 100	7 000	0,78	**K28995-28920**
63,5	110	21,996	18,824	22	86 000	115 000	13 700	6 000	0,912	**K395-394-A**
	112,712	30,163	23,812	30,162	137 000	192 000	24 300	6 200	1,27	**K39585-39520**
	112,712	30,048	23,812	30,162	119 000	176 000	22 400	6 300	1,22	**K3982-3920**
	122,238	38,354	29,718	38,1	230 000	255 000	42 500	7 000	2,18	**KHM212047-HM212011-XL**
	130	36,17	29	36,937	168 000	238 000	30 500	5 600	2,29	**K565-562-X**
65	110	28	22,5	28	119 000	167 000	21 100	6 400	1,05	**KJM511946-JM511910**
65,088	135,755	56,007	44,45	53,975	275 000	385 000	50 000	5 200	3,74	**AK6379-6320**

medias *https://www.schaeffler.de/std/1F9A*

Dimensions					Mounting dimensions								Calculation factors		
d	r_1, r_2	r_3, r_4	a	d_1	d_a	d_b	D_a	D_b	C_a	C_b	r_a	r_b	e	Y	Y_0
	min.	min.	≈	≈	max.	min.	min.	min.	min.	min.	max.	max.			
57,15	1,5	1,5	17	–	62	65	79	83	2	3,8	1,5	1,5	0,39	1,54	0,85
	2,3	0,8	19	75,7	62	66	89	92	4	5	2,3	0,8	0,35	1,69	0,93
	3,6	0,8	19	76,6	62	69	89	92	4	5	3,6	0,8	0,35	1,69	0,93
	3,6	2,3	23	76,6	62	69	87	91	2	5	3,6	2,3	0,35	1,69	0,93
	3,6	0,8	19	76,6	62	69	90	92	4	3,1	3,6	0,8	0,35	1,69	0,93
	2,3	3,3	24	80,3	67	70	92	98	3	5,5	2,3	3,3	0,34	1,79	0,98
	2,3	3,3	24	80,1	68	67	92	99	2	5	2,3	3,3	0,34	1,79	0,98
	2,3	2	22	80,1	63	67	96	100	4	5	2,3	2	0,34	1,79	0,98
	3,6	3,3	24	89,95	66	72	101	107	6	6	3,6	3,3	0,34	1,77	0,97
	7,9	3,3	24	90	66	81	101	107	6	6	7,9	3,3	0,34	1,77	0,97
	3,6	3,3	27	–	66	72	99	106	4	6	3,6	3,3	0,4	1,49	0,82
	3,6	3,3	28	–	68	74	104	112	3,5	6,5	3,6	3,3	0,44	1,38	0,76
	3,6	0,8	26	89,95	66	72	101	107	2,5	5,5	3,6	0,8	0,34	1,77	0,97
59,987	3,6	3,3	42	96,4	72	79	109	124	4	8	3,6	3,3	0,82	0,73	0,4
60,325	7,9	3,3	27	91,5	70	85	108	116	4	7	7,9	3,3	0,34	1,78	0,98
	5,2	3,3	42	97,3	74,4	87	109	124	6	4	5,2	3,3	0,82	0,73	0,4
61,913	0,8	1,3	21	87,9	69	70	101	105	4	3	0,8	1,3	0,4	1,49	0,82
	3,6	3,3	45	108,5	82,5	90	124	138	5	12,5	3,6	3,3	0,78	0,77	0,42
62,738	3,6	3,3	23	82,9	69	75	90	97	3	5,5	3,6	3,3	0,43	1,41	0,78
63,5	3,6	1,3	21	88,1	70	77	101	104,5	5	3	3,6	1,3	0,4	1,49	0,82
	3,6	3,3	24	89,6	69	73	101	107	6	6	3,6	3,3	0,34	1,77	0,97
	3,6	3,3	26	89	71	77	99	106	4	6	3,6	3,3	0,4	1,49	0,82
	7,1	3,3	27	91,7	73	87	108	116	4	7	7,1	3,3	0,34	1,78	0,98
	3,6	3	29	98,5	78	85	114	121	4	7,5	3,6	3	0,36	1,65	0,91
65	3	2,5	24	87,7	73	77	96	104	5	6	3	2,5	0,4	1,49	0,82
65,088	3,6	3,3	35	98,1	77	84	117	126	6	9	3,6	3,3	0,32	1,85	1,02

Tapered roller bearings

Single row to ANSI/ABMA

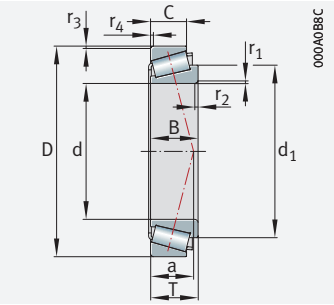

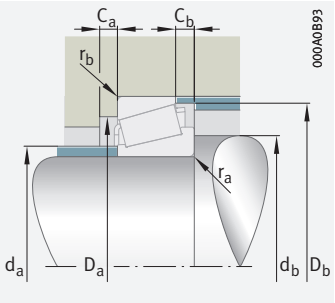

Mounting dimensions

d = 66,675 – 76,2 mm

Main dimensions					Basic load ratings		Fatigue limit load	Limiting speed	Mass	Designation
d	D	B	C	T	dyn. C_r	stat. C_{0r}	C_{ur}	n_G	m	➤580 | 1.12 ➤581 | 1.13 X-life ➤565
					N	N	N	min^{-1}	≈ kg	
66,675	110	21,996	18,824	22	86 000	115 000	13 800	6 600	0,855	**K395-A-394-A**
	110	21,996	18,824	22	86 000	115 000	14 000	6 600	0,801	**K395-S-394-A**
	112,712	30,162	23,812	30,162	137 000	192 000	24 300	6 200	1,18	**K39590-39520**
	112,712	30,048	23,812	30,162	119 000	176 000	22 400	6 300	1,2	**K3984-3920**
	112,712	30,048	23,812	30,162	119 000	176 000	21 900	6 000	0,7	**K3994-3920**
	122,238	38,354	29,718	38,1	193 000	255 000	32 500	5 800	1,93	**KHM212049-HM212010**
	122,238	38,354	29,718	38,1	193 000	255 000	32 500	5 800	1,88	**KHM212049-HM212011**
	136,525	41,275	31,75	41,275	270 000	295 000	47 500	6 300	2,77	**KH414242-H414210-XL**
68,262	110	21,996	18,824	22	86 000	115 000	13 700	6 000	0,781	**K399-A-394-A**
	110	21,996	18,824	22	86 000	115 000	13 700	6 600	0,781	**K399-AS-394-A**
69,85	112,712	21,996	15,875	22,225	85 000	115 000	14 000	6 400	0,798	**KLM613449-LM613410**
	117,475	30,162	23,812	30,162	124 000	189 000	24 500	5 900	1,21	**K33275-33462**
	120	32,545	26,195	32,545	152 000	224 000	28 500	5 800	1,53	**K47487-47420**
	120	29,007	24,237	29,794	112 000	150 000	18 400	5 600	1,317	**K482-472**
	127	36,17	28,575	36,512	168 000	238 000	30 500	5 600	1,95	**K566-563**
70	115	29	23	29	132 000	188 000	23 500	6 000	1,13	**KJM612949-JM612910**
71,438	120	32,545	26,195	32,545	152 000	224 000	28 500	5 800	1,61	**K47490-47420**
73,025	112,712	25,4	19,05	25,4	97 000	154 000	19 900	6 100	0,993	**K29685-29620**
	117,475	30,162	23,812	30,162	124 000	189 000	23 900	5 600	1,2	**K33281-33462**
	117,475	30,162	23,812	30,162	124 000	189 000	23 900	5 600	1,21	**K33287-33462**
75	115	25	19	25	124 000	165 000	27 000	7 200	0,919	**KJLM714149-JLM714110-XL**
	120	29,5	25	31	144 000	183 000	31 000	6 900	1,27	**KJM714249-JM714210-XL**
75,987	131,975	39	32	39	206 000	295 000	37 500	5 200	2,26	**KHM215249-HM215210**
76,2	127	31	22,225	30,162	136 000	199 000	28 500	5 000	1,51	**K42687-42620**
	133,35	29,769	22,225	30,163	134 000	200 000	24 600	5 200	1,95	**K495-A-492-A**
	133,35	39,688	32,545	39,688	189 000	325 000	41 500	5 000	2,4	**KHM516442-HM516410**
	133,35	39,688	32,545	39,688	189 000	325 000	41 500	5 000	2,2	**KHM516447-HM516410**
	136,525	29,769	22,225	30,163	134 000	200 000	24 600	5 200	2,046	**K495-A-493**
	142,138	46,1	33,338	44,45	206 000	290 000	36 500	5 000	2,99	**KHM515745-HM515716**

medias *https://www.schaeffler.de/std/1F9A*

Dimensions					Mounting dimensions								Calculation factors		
d	r_1, r_2	r_3, r_4	a	d_1	d_a	d_b	D_a	D_b	C_a	C_b	r_a	r_b	e	Y	Y_0
	min.	min.	≈	≈	max.	min.	min.	min.	min.	min.	max.	max.			
66,675	0,8	1,3	21	87,9	73	73	101	105	4	3	0,8	1,3	0,4	1,49	0,82
	3,6	1,3	21	88,1	73	79	101	104,5	5	3	3,6	1,3	0,4	1,49	0,82
	3,6	3,3	24	90	75	82	101	107	6	6	3,6	3,3	0,34	1,77	0,97
	3,6	3,3	27	89	74	80	99	106	4	6	3,6	3,3	0,4	1,49	0,82
	5,6	3,3	27	89	74	84	99	106	4	6	5,6	3,3	0,4	1,49	0,82
	3,6	1,5	27	91,5	75,5	82	108	116	4	8	3,6	1,5	0,34	1,78	0,98
	3,6	3,3	27	91,5	75,5	82	108	116	4	8	3,6	3,3	0,34	1,78	0,98
	3,6	3,3	30	–	81	85	121	129	6	9	3,6	3,3	0,36	1,67	0,92
68,262	2,3	1,3	21	88,1	74	78	101	104,5	5	3	2,3	1,3	0,4	1,49	0,82
	5,1	1,3	21	77,8	74	83	101	104,5	5	3	5,1	1,3	0,4	1,49	0,82
69,85	1,5	0,8	22	–	76	78	104	107	3	6	1,5	0,8	0,42	1,44	0,79
	3,6	3,3	28	95,5	77	84	104	112	4	6	3,6	3,3	0,44	1,38	0,76
	3,6	3,3	27	95	78	84	107	114	4	6	3,6	3,3	0,36	1,67	0,92
	3,6	2	26	93,9	77	83	107	112	3	5	3,6	2	0,38	1,56	0,86
	3,6	3,3	29	98,5	78	85	112	120	4	7,5	3,6	3,3	0,36	1,65	0,91
70	3	2,5	26	92,7	77	83	103	110	4	6	3	2,5	0,43	1,39	0,77
71,438	3,6	3,3	27	95,2	79	86	107	114	4	6	3,6	3,3	0,36	1,67	0,92
73,025	3,6	3,3	26	94,7	80	86	101	109	5	6	3,6	3,3	0,49	1,23	0,68
	3,6	3,3	28	95,5	79	87	104	112	4	6	3,6	3,3	0,44	1,38	0,76
	3,6	3,3	28	95,2	79	87	104	112	4	6	3,6	3,3	0,44	1,38	0,76
75	3	2,5	25	97	81	87	104	110	4,5	6	3	2,5	0,46	1,31	0,72
	3	2,5	29	99,4	83	88	108	115	4	6	3	2,5	0,44	1,35	0,74
75,987	7,1	3,6	30	103,2	85	98	118	126	7	7	7,1	3,6	0,33	1,8	0,99
76,2	3,6	3,3	27	102,6	84	90	114	121	4	8	3,6	3,3	0,42	1,43	0,79
	3,6	3,3	30	110,6	86	92	120	128	4	7,5	3,6	3,3	0,44	1,35	0,74
	3,6	3,3	32	110,5	87	93	118	129	4	7	3,6	3,3	0,4	1,49	0,82
	3,6	3,3	32	110,5	91	98	118	129	4	7	3,6	3,3	0,4	1,49	0,82
	3,6	3,3	30	110,6	86	92	122	130	4	7,5	3,6	3,3	0,44	1,35	0,74
	3,6	3,3	33	–	87	92	124	133	6	10	3,6	3,3	0,39	1,55	0,85

Tapered roller bearings

Single row to ANSI/ABMA

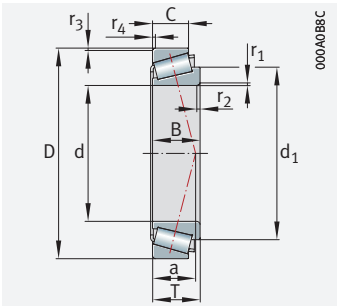

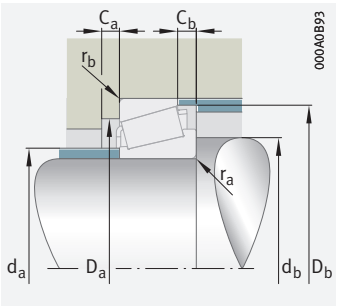

Mounting dimensions

d = 77,788 – 95,25 mm

Main dimensions					Basic load ratings		Fatigue limit load	Limiting speed	Mass	Designation
d	D	B	C	T	dyn. C_r	stat. C_{0r}	C_{ur}	n_G	m	➤*580*|*1.12* ➤*581*|*1.13* X-life ➤*565*
					N	N	N	min^{-1}	≈ kg	
77,788	117,475	25,4	19,05	25,4	99 000	159 000	20 600	5 800	0,932	**KLM814849-LM814810**
	121,442	23,012	17,463	24,607	82 000	113 000	14 000	5 900	0,928	**K34306-34478**
	127	31	22,225	30,162	136 000	199 000	28 500	5 000	1,45	**K42690-42620**
79,974	146,975	40	32,5	40	233 000	355 000	44 000	4 600	3,019	**KHM218238-HM218210**
80	130	34	28,5	35	160 000	239 000	29 500	5 000	1,74	**KJM515649-JM515610**
80,962	136,525	29,769	22,225	30,162	134 000	200 000	24 600	5 200	1,907	**K496-493**
82,55	133,35	33,338	26,195	33,338	153 000	235 000	29 500	5 200	1,79	**AK47686-47620**
	133,35	39,688	32,545	39,688	183 000	310 000	40 500	5 000	2,324	**KHM516449-HM516410**
	136,525	29,769	22,225	30,163	134 000	200 000	24 600	5 200	1,67	**K495-493**
	139,992	36,098	28,575	36,512	177 000	265 000	32 500	5 000	2,21	**K580-572**
	146,05	41,275	31,75	41,275	250 000	305 000	49 000	5 800	2,78	**K663-653-XL**
84,138	133,35	29,769	22,225	30,163	134 000	200 000	24 600	5 200	1,693	**K498-492-A**
	136,525	29,769	22,225	30,163	134 000	200 000	24 600	5 200	1,813	**K498-493**
85	130	29	24	30	130 000	205 000	26 000	5 200	1,37	**KJM716649-JM716610**
85,725	133,35	29,769	22,225	30,162	134 000	200 000	24 600	5 200	1,47	**K497-492-A**
	136,525	29,769	22,225	30,162	156 000	195 000	31 500	6 300	1,5	**AK497-493-XL**
	142,138	42,863	34,133	42,863	216 000	350 000	44 000	4 700	2,6	**KHM617049-HM617010**
88,9	152,4	39,688	30,163	39,688	244 000	350 000	39 000	4 500	2,94	**KHM518445-HM518410**
89,975	146,975	40	32,5	40	233 000	355 000	44 000	4 600	2,57	**KHM218248-HM218210**
90	145	34	27	35	177 000	265 000	32 500	4 700	2,12	**KJM718149-A-JM718110**
	145	34	27	35	177 000	265 000	32 500	4 700	2,15	**KJM718149-JM718110**
92,075	146,05	34,925	26,195	33,338	167 000	275 000	33 500	4 650	2,107	**K47890-47820**
	146,05	34,925	26,195	33,338	167 000	275 000	33 500	4 650	1,979	**K47896-47820**
	150	36,322	27	35,992	182 000	285 000	34 500	4 600	2,41	**K598-A-593-X**
95	135	20	14	20	81 000	131 000	15 900	5 100	0,85	**KJL819349-JL819310**
	150	34	27	35	182 000	285 000	34 500	4 600	2,3	**KJM719149-JM719113**
95,25	152,4	36,322	30,162	39,688	215 000	285 000	45 000	5 500	2,57	**K594-A-592-A-XL**
	152,4	36,322	30,162	39,688	215 000	285 000	45 000	5 500	2,55	**K594-592-A-XL**
	168,275	41,275	30,162	41,275	265 000	350 000	54 000	5 000	3,72	**K683-672-XL**

medias *https://www.schaeffler.de/std/1F9A*

Dimensions					Mounting dimensions								Calculation factors		
d	r_1, r_2	r_3, r_4	a	d_1	d_a	d_b	D_a	D_b	C_a	C_b	r_a	r_b	e	Y	Y_0
	min.	min.	≈	≈	max.	min.	min.	min.	min.	min.	max.	max.			
77,788	3,6	3,3	28	–	85	91	105	113	3	6	3,6	3,3	0,51	1,18	0,65
	3,6	2	26	99,4	84	90	110	116	3	7	3,6	2	0,45	1,33	0,73
	3,6	3,3	27	102,6	85	91	114	121	4	8	3,6	3,3	0,42	1,43	0,79
79,974	7,1	3,6	32	–	91	104	133	141	7	7,5	7,1	3,6	0,33	1,8	0,99
80	3	2,5	29	105,4	88	94	117	125	4,5	6,5	3	2,5	0,39	1,54	0,85
80,962	3,6	3,3	30	110,6	89	95	122	130	4	7,5	3,6	3,3	0,44	1,35	0,74
82,55	3,6	3,3	30	108,2	91	97	117	126	5	7	3,6	3,3	0,4	1,48	0,82
	3,6	3,3	32	110,5	92	99	118	128	5	7	3,6	3,3	0,4	1,49	0,82
	3,6	3,3	30	–	90	97	122	130	4	7,5	3,6	3,3	0,44	1,35	0,74
	3,6	3,3	31	110,7	91	98	125	133	5	7,5	3,6	3,3	0,4	1,49	0,82
	3,6	3,3	33	114,5	92	99	131	139	5	8	3,6	3,3	0,41	1,47	0,81
84,138	3,6	3,3	30	110,6	91	98	120	128	4	7,5	3,6	3,3	0,44	1,35	0,74
	3,6	3,3	30	110,6	91	98	122	130	4	7,5	3,6	3,3	0,44	1,35	0,74
85	3	2,5	30	109	92	98	117	125	4	6	3	2,5	0,44	1,35	0,74
85,725	3,6	3,3	30	110,6	93	99	120	128	4	7,5	3,6	3,3	0,44	1,35	0,74
	3,6	3,3	30	109,9	93	99	122	130	4	7,5	3,6	3,3	0,44	1,35	0,74
	4,8	3,3	36	116,3	95	106	125	138	4	8	4,8	3,3	0,43	1,39	0,76
88,9	6,4	3,3	34	119,5	100	110	134	146	4	8,5	6,4	3,3	0,4	1,49	0,82
89,975	7,1	3,6	31	119	99	104	130	140	7	7	7,1	3,6	0,33	1,8	0,99
90	6	2,5	33	118,5	99	111	131	139	4	7	6	2,5	0,44	1,35	0,74
	3	2,5	33	118,5	99	105	131	139	4	7	3	2,5	0,44	1,35	0,74
92,075	3,6	3,3	33	122,2	101	107	131	140	4,5	7	3,6	3,3	0,45	1,34	0,74
	3,6	3,3	33	–	101	107	131	140	4,5	7	3,6	3,3	0,45	1,34	0,74
	6,4	3	33	121,5	103	109	130	142	7	8	6,4	3	0,44	1,36	0,75
95	5	2,5	31	116,1	102	111	123	129	4	6	5	2,5	0,58	1,03	0,57
	3	2,5	33	118,5	104	109	135	143	4	6	3	2,5	0,44	1,36	0,75
95,25	5,1	3,3	37	122	104	113	135	144	3	9	5,1	3,3	0,44	1,36	0,75
	3,6	3,3	37	–	103	109	128	141	3	9	3,6	3,3	0,44	1,36	0,75
	3,6	3,3	38	133,5	106	113	149	160	5	9	3,6	3,3	0,47	1,28	0,7

Tapered roller bearings

Single row to ANSI/ABMA

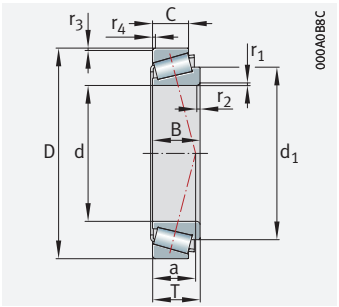

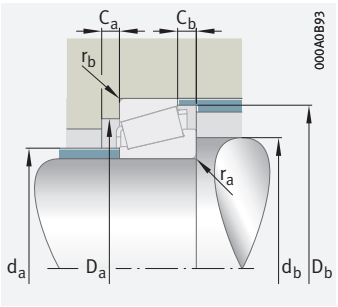

Mounting dimensions

d = 96,838 – 136,525 mm

Main dimensions					Basic load ratings		Fatigue limit load	Limiting speed	Mass	Designation
d	D	B	C	T	dyn. C_r	stat. C_{0r}	C_{ur}	n_G	m	➤580 | 1.12 ➤581 | 1.13 X-life ➤565
					N	N	N	min^{-1}	≈ kg	
96,838	148,43	28,971	21,433	28,575	139 000	216 000	26 000	4 650	1,91	**K42381-42584**
	188,912	46,038	31,75	50,8	270 000	340 000	39 000	3 550	5,62	**K90381-90744**
99,975	156,975	42	34	42	250 000	410 000	49 500	4 250	2,91	**KHM220149-HM220110**
100	155	35	28	36	187 000	305 000	36 500	4 300	2,39	**KJM720249-JM720210**
101,6	168,275	41,275	30,162	41,275	265 000	350 000	54 000	5 000	3,42	**K687-672-XL**
	212,725	66,675	53,975	66,675	580 000	720 000	107 000	4 050	11,1	**K941-932-XL**
106,362	165,1	36,512	26,988	36,512	244 000	335 000	51 000	4 950	2,79	**AK56418-56650-XL**
107,95	158,75	21,438	15,875	23,02	100 000	164 000	18 900	4 400	1	**K37425-37625**
	161,925	34,925	26,988	34,925	175 000	305 000	36 000	4 150	2,46	**K48190-48120**
	165,1	36,512	26,988	36,512	244 000	335 000	51 000	4 950	2,71	**AK56425-56650-XL**
	168,275	36,512	26,988	36,512	244 000	335 000	51 000	4 950	2,89	**AK56425-56662-XL**
109,538	158,75	21,438	15,875	23,02	100 000	164 000	18 900	4 400	1,359	**K37431-37625**
	158,75	21,438	15,875	23,02	100 000	164 000	18 900	4 400	1,36	**K37431-A-37625**
109,987	159,987	34,925	26,988	34,925	174 000	340 000	41 500	4 200	2,36	**KLM522548-LM522510**
	159,987	34,925	26,988	34,925	174 000	340 000	41 500	4 200	2,34	**KLM522549-LM522510**
	164,737	34,925	32,131	37,312	174 000	340 000	41 500	4 200	2,71	**KLM522549-LM522518**
110	165	35	26,5	35	188 000	305 000	36 500	4 050	2,53	**KJM822049-JM822010**
	180	46	38	47	320 000	510 000	60 000	3 750	5,03	**KJHM522649-JHM522610**
114,3	177,8	41,275	30,162	41,275	285 000	395 000	58 000	4 550	3,58	**K64450-64700-XL**
	212,725	66,675	53,975	66,675	580 000	720 000	107 000	4 050	10	**K938-932-XL**
119,957	195,262	57,15	44,45	53,975	375 000	630 000	74 000	3 500	6,4	**KHM124649-HM124618**
120	180	36	26	36	221 000	355 000	41 000	3 750	3	**KJM624649-JM624610**
120,65	190,5	46,038	34,925	46,038	305 000	490 000	56 000	3 500	4,77	**KHM624749-HM624710**
127	234,95	63,5	49,212	63,5	610 000	810 000	116 000	3 550	11,7	**K95500-95925-XL**
133,35	196,85	46,038	38,1	46,038	370 000	570 000	83 000	4 050	4,69	**K67390-67322-XL**
	234,95	63,5	49,212	63,5	610 000	810 000	116 000	3 550	11	**K95525-95925-XL**
136,525	194,975	33	27,5	33	223 000	400 000	44 500	3 450	3,18	**KLM229139-LM229110**

medias *https://www.schaeffler.de/std/1F9A*

Dimensions					Mounting dimensions								Calculation factors		
d	r_1, r_2	r_3, r_4	a	d_1	d_a	d_b	D_a	D_b	C_a	C_b	r_a	r_b	e	Y	Y_0
	min.	min.	≈	≈	max.	min.	min.	min.	min.	min.	max.	max.			
96,838	3,6	3	32	123,3	104	110	134	142	4	6,5	3,6	3	0,49	1,22	0,67
	3,5	3,3	64	142,9	113	125	161	179	2,5	12	3,5	3,3	0,87	0,69	0,38
99,975	7,9	3,6	33	129	109	120	140	150	5	8	7,9	3,6	0,33	1,8	0,99
100	3	2,5	36	127,5	109	115	140	149	4	6,5	3	2,5	0,47	1,27	0,7
101,6	3,6	3,3	38	133,5	112	118	149	160	7	11	3,6	3,3	0,47	1,28	0,7
	7,1	3,3	47	155,25	128	141	187	193	5	10	7,1	3,3	0,33	1,84	1,01
106,362	3,6	3,3	38	137,1	117	123	145	159	4	8	3,6	3,3	0,5	1,21	0,66
107,95	3,6	3,3	37	134,2	115	122	143	152	3,5	7	3,6	3,3	0,61	0,99	0,54
	3,6	3,3	39	–	116	122	146	156	3,5	7,5	3,6	3,3	0,51	1,19	0,65
	3,6	3,3	38	137,1	117	123	145	159	4	8	3,6	3,3	0,5	1,21	0,66
	3,6	3,3	38	–	117	123	145	159	4	8	3,6	3,3	0,5	1,21	0,66
109,538	3,6	3,3	37	134,2	116	123	143	152	3	7	3,6	3,3	0,61	0,99	0,54
	5	3,3	37	134,2	116	126	143	152	3	7	5	3,3	0,61	0,99	0,54
109,987	8,1	3,3	33	138,2	118	133	146	154	4	8	8,1	3,3	0,4	1,49	0,82
	3,6	3,3	33	138,2	118	124	146	154	4	7,5	3,6	3,3	0,4	1,49	0,82
	3,6	2,3	36	138,2	118	124	149	157	4	4	3,6	2,3	0,4	1,49	0,82
110	3	2,5	38	139	119	124	149	159	4,5	8	3	2,5	0,5	1,21	0,66
	3	2,5	41	145	122	127	162	172	5	7	3	2,5	0,41	1,48	0,81
114,3	3,6	3,3	43	147,3	125	131	160	172	5	9	3,6	3,3	0,52	1,16	0,64
	7,1	3,3	47	153,3	128	141	187	193	5	10	7,1	3,3	0,33	1,84	1,01
119,957	3	3,3	38	151,8	131	137	168	179	5	9,5	3	3,3	0,26	2,27	1,25
120	3,6	1,5	37	–	128	135	166	173	5,5	9,5	3,6	1,5	0,43	1,4	0,77
120,65	3,6	1,5	43	–	132	138	174	184	5	8,5	3,6	1,5	0,43	1,41	0,77
127	6,4	3,3	50	178	142	154	209	217	7	14	6,4	3,3	0,37	1,62	0,89
133,35	3,6	3,3	40	165,5	143	149	180	189	4	6,5	3,6	3,3	0,34	1,74	0,96
	9,7	3,3	50	178	148	166	209	217	8	12	9,7	3,3	0,37	1,62	0,89
136,525	3,6	3,6	33	–	146	152	182	190	5,5	7,5	3,6	3,6	0,33	1,8	0,99

Tapered roller bearings

Single row to ANSI/ABMA

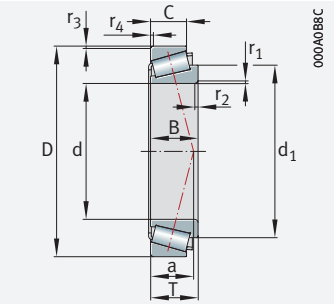

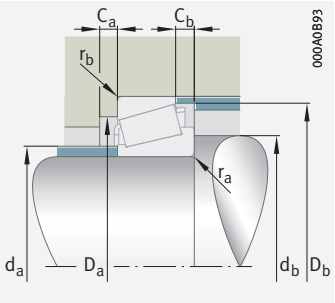

Mounting dimensions

d = 139,7 – 200,025 mm

Main dimensions					Basic load ratings		Fatigue limit load	Limiting speed	Mass	Designation
d	D	B	C	T	dyn. C_r	stat. C_{0r}	C_{ur}	n_G	m	➤580|1.12 ➤581|1.13 X-life ➤565
					N	N	N	min^{-1}	≈ kg	
139,7	180,975	20,638	16,67	21,433	133 000	184 000	23 800	4 800	1,22	**KLL428349-LL428310-XL**
	187,325	29,37	23,02	28,575	180 000	350 000	39 500	3 600	2,21	**KLM328448-LM328410**
	254	66,675	47,625	66,675	680 000	970 000	136 000	3 200	14,2	**K99550-99100-XL**
	295,275	87,312	57,15	82,55	830 000	1 120 000	133 000	2 450	24,1	**KHH231649-HH231615**
142,875	194,975	33	27,5	33	223 000	400 000	44 500	3 450	2,79	**KLM229146-LM229110**
	200,025	39,688	34,13	41,275	255 000	510 000	58 000	3 300	3,873	**K48684-48620**
	200,025	39,688	34,13	41,275	255 000	510 000	58 000	3 300	3,91	**K48685-48620**
146,05	193,675	28,575	23,02	28,575	215 000	335 000	47 500	4 250	2,24	**AK36690-36620-XL**
150	205	28,575	21,438	28,575	173 000	315 000	34 000	3 300	2,63	**KJL730646-JL730612**
152,4	268,288	74,612	57,15	74,612	670 000	1 070 000	130 000	2 500	16,6	**K107060-107105**
	307,975	93,662	66,675	88,9	960 000	1 290 000	149 000	2 260	28,1	**KHH234048-HH234010**
160	240	44,5	37	46	345 000	650 000	80 000	2 700	6,745	**KJM734445-JM734410**
	252,413	69,85	52,388	63,5	520 000	900 000	112 000	2 650	13	**KHM133448-HM133416**
165,1	225,425	39,688	33,338	41,275	239 000	520 000	65 000	2 950	5,03	**K46790-46720**
	336,55	95,25	69,85	92,075	1 280 000	1 550 000	197 000	2 500	37,1	**KHH437549-HH437510-XL**
170	240	44,5	37	46	345 000	650 000	80 000	2 700	6,2	**KJM734449-JM734410**
171,45	222,25	24,608	19,05	25,4	195 000	285 000	35 500	3 850	2,28	**KL435049-L435010-XL**
177,8	227,012	30,162	23,02	30,162	221 000	395 000	52 000	3 550	3,18	**K36990-36920-XL**
180	250	45	37	47	360 000	710 000	86 000	2 600	6,804	**KJM736149-JM736110**
184,15	234,95	33	28	34	234 000	485 000	36 500	2 800	3,46	**KLM236749-LM236710**
	235,229	33	28	34	234 000	485 000	36 500	2 800	3,45	**KLM236749-LM236710-A**
190	260	44	36,5	46	435 000	750 000	102 000	3 000	7,06	**KJM738249-JM738210-XL**
190,5	266,7	46,833	38,1	47,625	415 000	730 000	97 000	2 950	8,1	**K67885-67820-XL**
196,85	257,175	39,688	30,163	39,688	260 000	590 000	70 000	2 550	5,3	**KLM739749-LM739710**
199,949	282,575	49,212	36,512	46,038	435 000	810 000	105 000	2 750	9,6	**K67982-67920-XL**
200,025	276,225	46,038	34,133	42,862	380 000	720 000	84 000	2 420	7,85	**KLM241147-LM241110**

medias *https://www.schaeffler.de/std/1F9A*

Dimensions					Mounting dimensions								Calculation factors		
d	r_1, r_2	r_3, r_4	a	d_1	d_a	d_b	D_a	D_b	C_a	C_b	r_a	r_b	e	Y	Y_0
	min.	min.	≈	≈	max.	min.	min.	min.	min.	min.	max.	max.			
139,7	1,5	1,5	30	157	146	148	172	175	3,5	6	1,5	1,5	0,37	1,64	0,9
	1,5	1,5	32	–	147	149	176	182	5	5	1,5	1,5	0,36	1,69	0,93
	7,1	3,3	55	199	156	170	227	238	8	13,5	7,1	3,3	0,41	1,47	0,81
	9,7	6,4	56	199,1	161	177	258	264	9	19	9,7	6,4	0,32	1,88	1,04
142,875	3,6	3,6	33	–	150	157	182	190	5	5,5	3,6	3,6	0,33	1,8	0,99
	7,9	3,3	38	–	151	158	185	193	5	7	7,9	3,3	0,34	1,78	0,98
	3,6	3,3	38	172,3	151	158	185	193	5	7	3,6	3,3	0,34	1,78	0,98
146,05	1,5	1,5	33	168,2	153	155	180	186	5	5	1,5	1,5	0,37	1,63	0,9
150	2,5	2	40	178,3	158	164	190	198	4	7	2,5	2	0,46	1,31	0,72
152,4	6,4	6,4	60	204	171	181	237	249	8	13,5	6,4	6,4	0,39	1,55	0,85
	9,7	6,9	63	214,5	179	191	276	285,4	9	17	9,7	6,9	0,33	1,84	1,01
160	3	2,5	50	205,5	173	178	222	232	6	9	3	2,5	0,44	1,37	0,75
	1,5	3,3	46	–	174	178	221	233	7	11,5	1,5	3,3	0,26	2,27	1,25
165,1	3,6	3,3	45	199	174	181	209	218	2,5	6,5	3,6	3,3	0,38	1,57	0,86
	3,3	6,4	72	239,5	197	196	280	308	10	22	3,3	6,4	0,37	1,62	0,89
170	3	2,5	50	205,5	180	185	222	232	6	9	3	2,5	0,44	1,37	0,75
171,45	1,5	1,5	36	193	179	181	211	215	3	6	1,5	1,5	0,38	1,6	0,88
177,8	1,5	1,5	43	203,6	186	188	214	221	4	7	1,5	1,5	0,44	1,36	0,75
180	3	2,5	54	217	190,5	196	232	242,6	5	8	3	2,5	0,48	1,25	0,69
184,15	2	2	39	209,8	191	195	224	229	4	5	2	2	0,33	1,79	0,99
	2	2	39	209,8	191	195	224	229	4	5	2	2	0,33	1,79	0,99
190	3	2,5	55	227	200	206	242	252	5	7,5	3	2,5	0,48	1,26	0,69
190,5	3,6	3,3	58	233	206	209	239	257	4	7,5	3,6	3,3	0,48	1,26	0,69
196,85	3,6	3,3	51	230	206	213	239	251	4	7,5	3,6	3,3	0,45	1,34	0,74
199,949	3,6	3,3	62	248,5	216	222	260	275	5	8	3,6	3,3	0,51	1,18	0,65
200,025	3,6	3,3	45	–	214	219	260	267	5	9	3,6	3,3	0,32	1,88	1,04



Tapered roller bearings

Single row to ANSI/ABMA

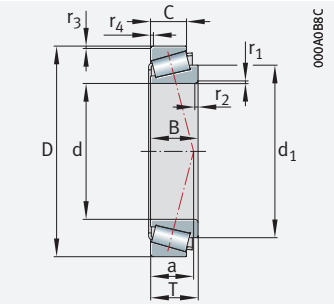

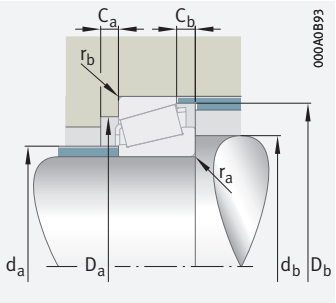

Mounting dimensions

d = 203,2 – 673,1 mm

Main dimensions					Basic load ratings		Fatigue limit load	Limiting speed	Mass	Designation
d	D	B	C	T	dyn. C_r	stat. C_{0r}	C_{ur}	n_G	m	➤580 | 1.12 ➤581 | 1.13 X-life ➤565
					N	N	N	min^{-1}	≈ kg	
203,2	276,225	42,862	34,133	42,862	380 000	720 000	84 000	2 420	7,205	**KLM241149-LM241110**
203,987	276,225	46,038	34,133	42,862	380 000	720 000	84 000	2 420	7,248	**KLM241148-LM241110**
	276,225	46,038	34,132	42,862	380 000	720 000	84 000	2 420	7,21	**KLM241148-LM241111**
206,375	282,575	46,038	36,512	46,038	435 000	810 000	105 000	2 750	8,5	**K67985-67920-XL**
212,725	285,75	46,038	34,925	46,038	360 000	790 000	80 000	2 240	8,2	**KLM742745-LM742710**
215,9	285,75	46,038	34,925	46,038	360 000	790 000	80 000	2 240	7,8	**KLM742749-LM742710**
216,408	285,75	49,212	34,925	46,038	360 000	790 000	80 000	2 240	7,85	**KLM742747-LM742710**
216,713	285,75	49,213	34,925	46,038	360 000	790 000	80 000	2 240	7,77	**KLM742747-A-LM742710**
223,838	295,275	46,038	34,925	46,038	370 000	830 000	83 000	2 170	8,5	**KLM844049-LM844010**
228,6	295,275	31,75	23,813	33,338	250 000	510 000	57 000	2 320	5,3	**AK544090-544116**
230,188	317,5	52,388	36,512	47,625	455 000	830 000	93 000	2 090	11,106	**KLM245846-LM245810**
231,775	317,5	52,388	36,512	47,625	540 000	830 000	105 000	2 550	10,8	**KLM245848-LM245810-XL**
234,95	314,325	49,213	36,512	49,212	480 000	990 000	112 000	2 070	10,3	**KLM545849-LM545810**
279,982	380,898	65,088	49,212	65,088	690 000	1 610 000	174 000	1 670	21,317	**KLM654642-LM654610**
285,75	380,898	65,088	49,212	65,088	690 000	1 610 000	174 000	1 670	19,9	**KLM654649-LM654610**
317,5	447,675	85,725	68,262	85,725	1 210 000	2 600 000	265 000	1 420	41,6	**KHM259049-HM259010**
342,9	450,85	66,675	52,388	66,675	1 090 000	2 030 000	232 000	1 730	26,9	**KLM361649-LM361610-XL**
343,154	450,85	66,675	52,388	66,675	1 090 000	2 030 000	232 000	1 730	26,9	**KLM361649-A-LM361610-XL**
596,9	685,8	31,75	25,4	31,75	410 000	1 120 000	95 000	1 010	17,3	**K680235-680270**
673,1	793,75	61,912	49,212	66,675	1 060 000	3 250 000	270 000	630	51,9	**KLL481448-LL481411**

medias *https://www.schaeffler.de/std/1F9A*

Dimensions					Mounting dimensions								Calculation factors		
d	r_1, r_2 min.	r_3, r_4 min.	a ≈	d_1 ≈	d_a max.	d_b min.	D_a min.	D_b min.	C_a min.	C_b min.	r_a max.	r_b max.	e	Y	Y_0
203,2	3,6	3,3	45	–	214	219	260	267	5	8	3,6	3,3	0,32	1,04	1,88
203,987	3,6	3,3	45	–	214	219	260	267	5	9	3,6	3,3	0,32	1,04	1,88
	3,6	3,3	45	–	214	219	260	267	5	8	3,6	3,3	0,32	1,04	1,88
206,375	3,6	3,3	62	248,5	221	220	254	272	5	8	3,6	3,3	0,51	0,65	1,18
212,725	3,6	3,3	61	255	225	230	266	279	5	10,5	3,6	3,3	0,48	0,69	1,25
215,9	3,6	3,3	61	255	227	233	266	279	5	11	3,6	3,3	0,48	0,69	1,25
216,408	3,6	3,3	61	255	227	233	266	279	5	11	3,6	3,3	0,48	0,69	1,25
216,713	3,6	3,3	61	255	227	233	266	279	5	11	3,6	3,3	0,48	0,69	1,25
223,838	3,6	3,3	64	264	235	241	275	288	5	11	3,6	3,3	0,5	0,66	1,2
228,6	3,6	3,3	50	262,5	240	244	280	287	4	9,5	3,6	3,3	0,4	0,82	1,49
230,188	3,3	3,3	50	–	245	248	299	306	10	11	3,3	3,3	0,32	1,04	1,88
231,775	3,3	3,3	50	270	247	248	296	304	10	11	3,3	3,3	0,32	1,04	1,88
234,95	3,6	3,3	58	274,5	246	252	296	306	5	10	3,6	3,3	0,4	0,83	1,51
279,982	3,6	3,3	76	–	298	302	356	368	4,5	12	3,6	3,3	0,43	0,76	1,39
285,75	3,6	3,3	76	334,5	302	306	356	368	7	16	3,6	3,3	0,43	0,76	1,39
317,5	3,6	3,3	80	380,4	337	341	418	428	9	13,5	3,6	3,3	0,33	0,99	1,8
342,9	8,6	3,6	77	390,5	360	373	425	435	7	14	8,6	3,6	0,35	0,94	1,7
343,154	8,6	3,6	77	390,5	360	373	425	435	7	14	8,6	3,6	0,35	0,94	1,7
596,9	3,6	3,3	126	637	615	621	659	667	8	6	3,6	3,3	0,53	0,63	1,14
673,1	6,4	6,4	117	725	690	702	765	771	7	14	6,4	6,4	0,36	0,92	1,67

Tapered roller bearings

Matched pairs

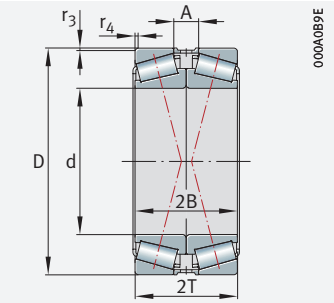

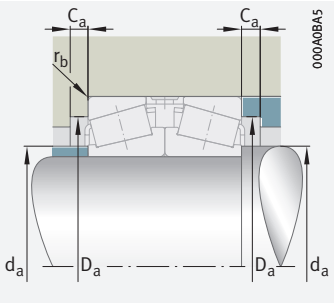

Mounting dimensions

d = 40 – 150 mm

Main dimensions				Basic load ratings for bearing pair		Fatigue limit load Bearing pair	Limiting speed Bearing pair	Speed rating Bearing pair	Mass for bearing pair	Designation
d	D	2B	2T	dyn. C_r	stat. C_{0r}	C_{ur}	n_G	$n_{\vartheta r}$	m	➤*580*|*1.12* ➤*581*|*1.13* X-life ➤*565*
				N	N	N	min^{-1}	min^{-1}	≈ kg	
40	90	46	50,5	153 000	165 000	24 700	8 700	5 100	1,52	**31308-XL-DF-A115-155**
	90	46	50,5	153 000	165 000	24 700	8 700	5 100	1,52	**31308-XL-DF-A50-90**
60	110	44	47,5	210 000	246 000	37 500	7 500	4 250	1,97	**30212-XL-DF-A100-140**
80	125	58	58	280 000	425 000	69 000	6 000	3 450	2,66	**32016-X-XL-DF-A140-170**
	125	58	58	280 000	425 000	69 000	6 000	3 450	2,66	**32016-X-XL-DF-A150-200**
	125	58	58	280 000	425 000	69 000	6 000	3 450	2,66	**32016-X-XL-DF-A25-50**
85	130	58	58	285 000	450 000	73 000	5 700	3 250	2,8	**32017-X-XL-DF-A170-220**
	130	58	58	285 000	450 000	73 000	5 700	3 250	2,8	**32017-X-XL-DF-A190-230**
90	140	64	64	335 000	510 000	82 000	5 400	3 200	3,64	**32018-X-XL-DF-A170-220**
	160	80	85	530 000	720 000	111 000	4 800	2 650	7,12	**32218-XL-DF-A220-270**
100	150	64	64	350 000	570 000	88 000	4 950	2 900	4,02	**32020-X-XL-DF-A220-270**
105	160	70	70	410 000	660 000	101 000	4 650	2 650	5,11	**32021-X-XL-DF-A280-330**
	190	100	106	780 000	1 110 000	166 000	4 000	2 110	13	**32221-XL-DF-A230-280**
110	170	76	76	490 000	790 000	119 000	4 350	2 440	6,31	**32022-X-XL-DF-A170-230**
	170	76	76	490 000	790 000	119 000	4 350	2 440	6,31	**32022-X-XL-DF-A220-270**
	170	76	76	490 000	790 000	119 000	4 350	2 440	6,31	**32022-X-XL-DF-A90-130**
	240	114	126	940 000	1 170 000	160 000	3 100	1 890	26,2	**31322-X-XL-DF-A200-250**
	240	114	126	940 000	1 170 000	160 000	3 100	1 890	26,2	**31322-X-XL-P5-DF-A120-160**
	240	114	126	940 000	1 170 000	160 000	3 100	1 890	26,2	**31322-X-XL-P5-DF-A140-180**
	240	114	126	940 000	1 170 000	160 000	3 100	1 890	26,2	**31322-X-XL-P5-DF-A60-100**
120	180	76	76	510 000	840 000	126 000	4 050	2 240	6,76	**32024-X-XL-DF-A230-280**
130	200	90	90	660 000	1 100 000	161 000	3 650	1 960	9,94	**32026-X-XL-DF-A125-175**
	200	90	90	660 000	1 100 000	161 000	3 650	1 960	9,94	**32026-X-XL-DF-A200-250**
	200	90	90	660 000	1 100 000	161 000	3 650	1 960	9,94	**32026-X-XL-DF-A250-300**
140	210	90	90	690 000	1 180 000	172 000	3 450	1 810	11,1	**32028-X-XL-DF-A250-300**
150	225	96	96	780 000	1 350 000	192 000	3 200	1 650	13,5	**32030-X-XL-DF-A120-170**
	225	96	96	780 000	1 350 000	192 000	3 200	1 650	13,5	**32030-X-XL-DF-A280-330**
	225	118	118	950 000	1 770 000	255 000	3 150	1 580	16,7	**33030-XL-DF-A0-35**

medias *https://www.schaeffler.de/std/1F9A*

Dimensions			Mounting dimensions					Calculation factors			
d	r_3, r_4 min.	A	d_a max.	D_a min.	D_a max.	C_a min.	r_b max.	e	Y_1	Y_2	Y_0
40	1,5	16,5	51	71	81	4	1,5	0,83	0,82	1,22	0,8
	1,5	16,5	51	71	81	4	1,5	0,83	0,82	1,22	0,8
60	1,5	9,5	70	96	101	4	1,5	0,41	1,67	2,48	1,63
80	1,5	14	89	112	117	6	1,5	0,42	1,6	2,38	1,56
	1,5	14	89	112	117	6	1,5	0,42	1,6	2,38	1,56
	1,5	14	89	112	117	6	1,5	0,42	1,6	2,38	1,56
85	1,5	14	94	117	122	6	1,5	0,44	1,53	2,27	1,49
	1,5	14	94	117	122	6	1,5	0,44	1,53	2,27	1,49
90	1,5	16	100	125	131	6	1,5	0,42	1,6	2,38	1,56
	2	17	102	138	150	5	2	0,42	1,61	2,39	1,57
100	1,5	16	109	134	141	6	1,5	0,46	1,47	2,19	1,44
105	2	18	116	143	150	6	2	0,44	1,52	2,26	1,49
	2,5	20	120	161	178	5	2,5	0,42	1,61	2,39	1,57
110	2	18	122	152	160	7	2	0,43	1,57	2,34	1,53
	2	18	122	152	160	7	2	0,43	1,57	2,34	1,53
	2	18	122	152	160	7	2	0,43	1,57	2,34	1,53
	3	50	135	188	226	7	3	0,83	0,82	1,22	0,8
	3	50	135	188	226	7	3	0,83	0,82	1,22	0,8
	3	50	135	188	226	7	3	0,83	0,82	1,22	0,8
	3	50	135	188	226	7	3	0,83	0,82	1,22	0,8
120	2	18	131	161	170	7	2	0,46	1,47	2,19	1,44
130	2	22	144	178	190	8	2	0,43	1,55	2,31	1,52
	2	22	144	178	190	8	2	0,43	1,55	2,31	1,52
	2	22	144	178	190	8	2	0,43	1,55	2,31	1,52
140	2	22	153	187	200	8	2	0,46	1,47	2,19	1,44
150	2,5	24	164	200	213	8	2,5	0,46	1,47	2,19	1,44
	2,5	24	164	200	213	8	2,5	0,46	1,47	2,19	1,44
	2,5	26	164	200	213	8	2,5	0,36	1,85	2,76	1,81

Tapered roller bearings

Matched pairs

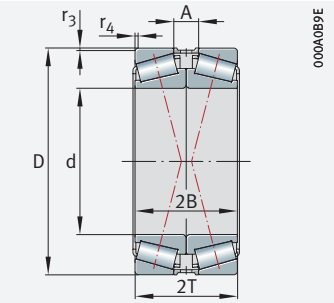

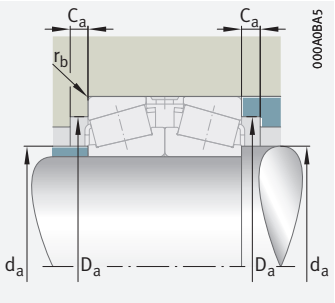

Mounting dimensions

d = 170 – 260 mm

Main dimensions				Basic load ratings for bearing pair		Fatigue limit load Bearing pair	Limiting speed Bearing pair	Speed rating Bearing pair	Mass for bearing pair	Designation
d	D	2B	2T	dyn. C_r	stat. C_{0r}	C_{ur}	n_G	$n_{\vartheta r}$	m	➤*580*|*1.12* ➤*581*|*1.13* X-life ➤*565*
				N	N	N	min^{-1}	min^{-1}	≈ kg	
170	310	172	182	1 980 000	3 100 000	415 000	2 350	1 090	59,2	**32234-XL-DF-A320-370**
	310	172	182	1 980 000	3 100 000	415 000	2 350	1 090	59,2	**32234-XL-DF-A350-410**
	310	172	182	1 980 000	3 100 000	415 000	2 350	1 090	59,2	**32234-XL-DF-A490-540**
180	280	128	128	1 270 000	2 200 000	295 000	2 550	1 250	28,9	**32036-X-XL-DF-A240-290**
	280	128	128	1 270 000	2 200 000	295 000	2 550	1 250	28,9	**32036-X-XL-DF-A320-370**
	280	128	128	1 270 000	2 200 000	295 000	2 550	1 250	28,9	**32036-X-XL-DF-A330-380**
	320	172	182	2 040 000	3 300 000	435 000	2 270	1 020	62,3	**32236-XL-DF-A330-380**
	320	172	182	2 040 000	3 300 000	435 000	2 270	1 020	62,3	**32236-XL-DF-A380-430**
	320	172	182	2 040 000	3 300 000	435 000	2 270	1 020	62,3	**32236-XL-DF-A385-445**
	320	172	182	2 040 000	3 300 000	435 000	2 270	1 020	62,3	**32236-XL-DF-A430-480**
190	290	128	128	1 280 000	2 250 000	300 000	2 460	1 180	30,1	**32038-X-XL-DF-A120-150**
	290	128	128	1 280 000	2 250 000	300 000	2 460	1 180	30,1	**32038-X-XL-DF-A200-250**
	290	128	128	1 280 000	2 250 000	300 000	2 460	1 180	30,1	**32038-X-XL-DF-A300-350**
	290	128	128	1 280 000	2 250 000	300 000	2 460	1 180	30,1	**32038-X-XL-DF-A350-400**
	290	128	128	1 280 000	2 250 000	300 000	2 460	1 180	30,1	**32038-X-XL-DF-A370-420**
	290	128	128	1 280 000	2 250 000	300 000	2 460	1 180	30,1	**32038-X-XL-DF-A580-630**
200	360	196	208	2 700 000	4 150 000	520 000	2 030	890	88,2	**32240-XL-DF-A350-400**
	360	196	208	2 700 000	4 150 000	520 000	2 030	890	88,2	**32240-XL-DF-A400-450**
	360	196	208	2 700 000	4 150 000	520 000	2 030	890	88,2	**32240-XL-DF-A500-550**
240	360	152	152	1 820 000	3 350 000	420 000	1 950	870	53,5	**32048-X-XL-DF-A300-350**
	360	152	152	1 820 000	3 350 000	420 000	1 950	870	53,5	**32048-X-XL-DF-A400-450**
	360	152	152	1 820 000	3 350 000	420 000	1 950	870	53,5	**32048-X-XL-DF-A450-500**
	360	152	152	1 820 000	3 350 000	420 000	1 950	870	53,5	**32048-X-XL-DF-A700-750**
	440	240	254	3 750 000	6 200 000	740 000	1 630	660	166	**32248-XL-DF-A350-400**
	440	240	254	3 750 000	6 200 000	740 000	1 630	660	166	**32248-XL-DF-A450-500**
260	480	260	274	4 550 000	7 600 000	880 000	1 480	560	215	**32252-XL-DF-A500-550**
	480	260	274	4 550 000	7 600 000	880 000	1 480	560	215	**32252-XL-DF-A550-600**

medias *https://www.schaeffler.de/std/1F9A*

Dimensions			Mounting dimensions					Calculation factors			
d	r_3, r_4 min.	A	d_a max.	D_a min.	D_a max.	C_a min.	r_b max.	e	Y_1	Y_2	Y_0
170	4	40	196	259	292	10	4	0,43	1,55	2,31	1,52
	4	40	196	259	292	10	4	0,43	1,55	2,31	1,52
	4	40	196	259	292	10	4	0,43	1,55	2,31	1,52
180	2,5	32	199	247	268	10	2,5	0,42	1,6	2,38	1,56
	2,5	32	199	247	268	10	2,5	0,42	1,6	2,38	1,56
	2,5	32	199	247	268	10	2,5	0,42	1,6	2,38	1,56
	4	40	204	267	302	10	4	0,45	1,5	2,23	1,47
	4	40	204	267	302	10	4	0,45	1,5	2,23	1,47
	4	40	204	267	302	10	4	0,45	1,5	2,23	1,47
	4	40	204	267	302	10	4	0,45	1,5	2,23	1,47
190	2,5	32	209	257	278	10	2,5	0,44	1,53	2,27	1,49
	2,5	32	209	257	278	10	2,5	0,44	1,53	2,27	1,49
	2,5	32	209	257	278	10	2,5	0,44	1,53	2,27	1,49
	2,5	32	209	257	278	10	2,5	0,44	1,53	2,27	1,49
	2,5	32	209	257	278	10	2,5	0,44	1,53	2,27	1,49
	2,5	32	209	257	278	10	2,5	0,44	1,53	2,27	1,49
200	4	44	226	302	342	11	4	0,41	1,66	2,47	1,62
	4	44	226	302	342	11	4	0,41	1,66	2,47	1,62
	4	44	226	302	342	11	4	0,41	1,66	2,47	1,62
240	3	38	261	318	346	12	3	0,46	1,47	2,19	1,44
	3	38	261	318	346	12	3	0,46	1,47	2,19	1,44
	3	38	261	318	346	12	3	0,46	1,47	2,19	1,44
	3	38	261	318	346	12	3	0,46	1,47	2,19	1,44
	4	54	286	372	422	14	4	0,43	1,55	2,31	1,52
	4	54	286	372	422	14	4	0,43	1,55	2,31	1,52
260	5	62	306	401	458	14	5	0,43	1,57	2,34	1,53
	5	62	306	401	458	14	5	0,43	1,57	2,34	1,53

Integral tapered roller bearings

Sealed on one side

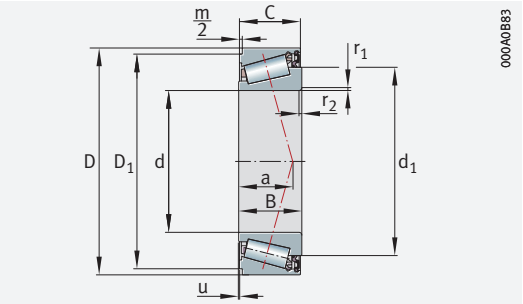

d = 30 – 80 mm

Main dimensions				Basic load ratings		Fatigue limit load	Limiting speed	Load carrying capacity	Max. axial assembly clamping force	Mass Bearing[1]	Designation ➤580|1.12 ➤581|1.13	
d	D	B	C	dyn. C_r	stat. C_{0r}	C_{ur}	n_G	F_{BR}[2]	Bearing pair	m	Bearing	Snap ring
				N	N	N	min^{-1}	N	N	≈ kg		
30	55	19	18,5	38 500	46 500	5 400	6 100	15 700	7 700	0,19	**JK0S030**	BR55
40	68	21	20,5	53 000	71 000	8 500	4 950	12 900	10 600	0,3	**JK0S040**[3]	BR68
50	80	22	21,5	64 000	93 000	11 400	4 050	31 400	12 800	0,41	**JK0S050**	BR80
60	95	26	25	82 000	123 000	15 500	3 350	59 300	16 400	0,67	**JK0S060**	BR95
70	110	27	26,5	104 000	159 000	20 500	2 900	49 000	20 800	0,93	**JK0S070-A**	BR110
80	125	30	29,5	137 000	211 000	27 000	2 550	40 200	27 400	1,32	**JK0S080-A**	BR125

medias *https://www.schaeffler.de/std/1F9A*

Other sizes and designs are also available; please contact us.

Ordering note

FAG integral tapered roller bearings are interchangeable with each other.
When ordering, please always state the number of single bearings, not the number of bearing pairs.
The snap ring must be ordered separately, for example

2 tapered roller bearings JK0S080-A
1 snap ring BR125

1) Ungreased.

2) For snap ring connection located against a sharp edge.

3) Also available with 95% grease filling; designation: JK0S040-J14.

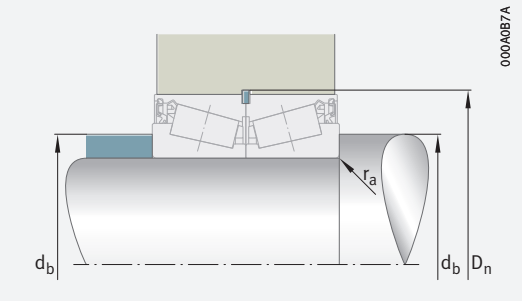

Mounting dimensions

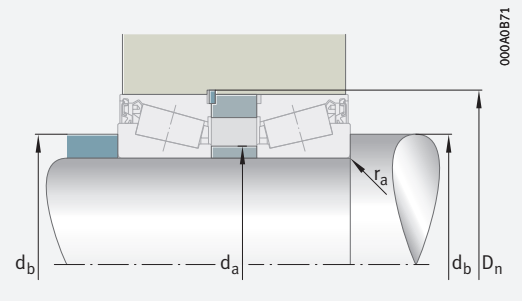

Mounting dimensions

Dimensions								Mounting dimensions					Calculation factors		
								Shaft			Slot				
d	r_1, r_2 min.	D_1	m/2	a ≈	u	Δ_u Deviations	d_1 ≈	d_a max.	d_b min.	r_a max.	D_n Nominal dimension	Δ_{Dn} Deviations	e	Y	Y_0
30	1	51,4	0,75	15	0,02	+0,05 0	43,6	35	36	1	56,5	+0,19 0	0,43	1,4	0,77
40	1	64,4	0,75	16	0,03	+0,05 0	53,8	46	46	1	69,5	+0,19 0	0,37	1,6	0,88
50	1	75,7	1	19	0,02	+0,05 0	66,4	56	56	1	81,8	+0,22 0	0,42	1,43	0,79
60	1,5	89,3	1,25	23	0,03	+0,05 0	79,5	67	67	1,5	97	+0,22 0	0,43	1,4	0,77
70	1,5	104,8	1,25	25	0,03	+0,05 0	91,5	78	77	1,5	112,3	+0,22 0	0,43	1,38	0,76
80	1,5	119,8	1,25	28	0,03	+0,05 0	104,2	89	87	1,5	127,3	+0,25 0	0,42	1,42	0,78

Barrel roller bearings



Matrix for bearing preselection 653

1 Barrel roller bearings 654

1.1 Bearing design 654
1.2 Load carrying capacity 655
1.3 Compensation of angular misalignments 656
1.4 Lubrication 656
1.5 Sealing 656
1.6 Speeds 656

FAG

1.7 Noise ____ *656*
1.8 Temperature range ____ *657*
1.9 Cages ____ *657*
1.10 Internal clearance ____ *657*
1.11 Dimensions, tolerances ____ *658*
1.12 Suffixes ____ *659*
1.13 Structure of bearing designation ____ *659*
1.14 Dimensioning ____ *660*
1.15 Minimum load ____ *660*
1.16 Design of bearing arrangements ____ *661*
1.17 Mounting and dismounting ____ *664*
1.18 Legal notice regarding data freshness ____ *665*
1.19 Further information ____ *665*
Product tables ____ *666*
Barrel roller bearings with cylindrical or tapered bore ____ *666*
Barrel roller bearings with adapter sleeve ____ *672*

Matrix for bearing preselection

The matrix gives an overview of the types and design features.

It can be used to make a preliminary assessment of whether a bearing is fundamentally suitable for the envisaged application.

The additional information provided in the product chapter (see column "detailed information") and in the Technical principles must, however, be observed in addition to this overview in selection of the bearing.

Design features and suitability			Barrel roller bearings		
+++ extremely suitable ++ highly suitable + suitable (+) suitable with restrictions – not suitable/not applicable ✓ available			cylindrical or tapered bore	with adapter sleeve	detailed information ➤ 654
Load carrying capacity	radial		+++	+++	➤655|1.2
	axial, one direction		+	+	➤655|1.2
	axial, both directions		+	+	➤655|1.2
	moments		–	–	
Compensation of angular misalignments	static		+++	+++	➤656|1.3
	dynamic		+	+	➤656|1.3
Bearing design	cylindrical bore		✓	✓	➤654|1.1
	tapered bore		✓	–	➤654|1.1
	separable		–	–	➤664|1.17
Lubrication	greased		–	–	➤656|1.4
Sealing	open		✓	✓	➤656|1.5
	non-contact		–	–	
	contact		–	–	
Operating temperature in °C	from to		–30 +150[1]	–30 +150[1]	➤657|1.8
Suitability for	high speeds		+	+	➤64
	high running accuracy		(+)	(+)	➤658|1.11 ➤115
	low-noise running		(+)	(+)	➤656|1.7 ➤27
	high rigidity		++	++	➤54
	reduced friction		+	+	➤56
	length compensation within bearing		–	–	
	non-locating bearing arrangement		+	+	➤141
	locating bearing arrangement		+	+	➤141
X-life bearings		X-life	–	–	
Bearing bore[2] d in mm	from to		20 260[3]	20 140[3]	➤666
Product tables	from page ➤		666	672	

1) Data valid for bearings with brass cages, D ≦ 120 mm

2) For bearings with adapter sleeve: inside diameter of adapter sleeve

3) Larger catalogue bearings GL 1

1 Barrel roller bearings

Barrel roller bearings are suitable:
- for compensating angular misalignments where there is skewing between the outer and inner ring ➤*656|1.3*
- where high radial shock type loads occur, as a result of the line contact ➤*655|1.2*
- where angular misalignments and high radial loads occur, but speed is not a priority ➤*654|1*

For an overview of other product-specific features, see the Matrix for bearing preselection ➤*653*.

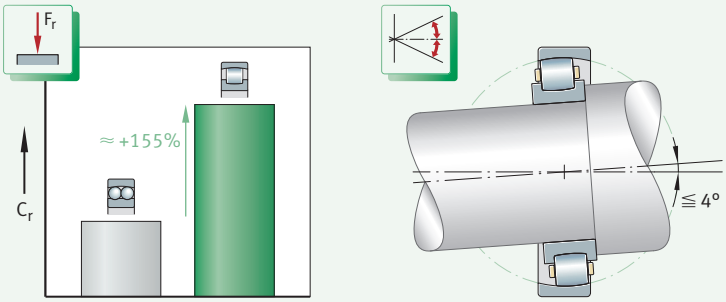

1
Barrel roller bearing: comparison of load carrying capacity with self-aligning ball bearing, compensation of misalignments

F_r = *radial load*
C_r = *radial basic dynamic load rating*

1.1 Bearing design

Design variants

Barrel roller bearings are available as:
- bearings of basic design ➤*655|2*
- bearings with adapter sleeve ➤*655|3*

Bearings of basic design

The outer ring has a curved raceway

Barrel roller bearings are single row, self-retaining radial roller bearings, which are part of the group of self-aligning bearings. The outer ring has a concave raceway. As a result, the bearings permit the compensation of static and dynamic angular misalignments (skewing between the inner and outer ring) within certain limits ➤*656|1.3*. The inner ring has a formed raceway for the rolling elements and two rigid ribs. The rollers are barrel-shaped and are guided between the inner ring ribs. Their outside surface line closely follows the raceway profile of the outer and inner ring. Solid cages made from polyamide PA66 or brass are used ➤*657|2*.

The bore is cylindrical or tapered

Barrel roller bearings of basic design are available with a cylindrical or tapered bore, as a function of the bore diameter d ➤*655|2*.

Bearings with a tapered bore have a bore taper of 1:12 and the suffix K ➤*659|5*.

2
Barrel roller bearings of basic design

F_r = *radial load*
F_a = *axial load*

① *Barrel roller bearing with cylindrical bore*
② *Barrel roller bearing with tapered bore, bore taper 1:12*

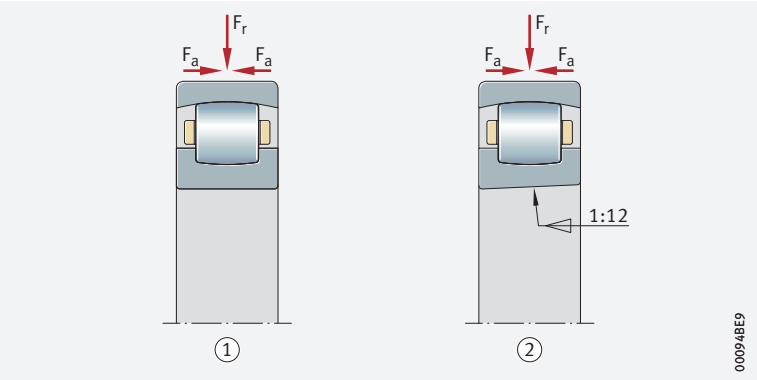

Bearings with adapter sleeve

Ready-to-fit bearing mounting kits facilitate the ordering and mounting of barrel roller bearings

Complete bearing mounting kits comprising the bearing of basic design, slotted adapter sleeve, tab washer and locknut, are also available for use in the location of barrel roller bearings with a tapered bore on a cylindrical shaft journal (series 202..-K + H, 203..-K + H) ➤*655*|*3*. Adapter sleeves allow bearings to be located on smooth and stepped shafts. The adapter sleeves must also be stated when placing the order. Ordering example ➤*659*|*5*.

3
Barrel roller bearing with adapter sleeve

F_r = *radial load*
F_a = *axial load*

① *Barrel roller bearing with tapered bore*
② *Adapter sleeve*
③ *Locknut*
④ *Tab washer*

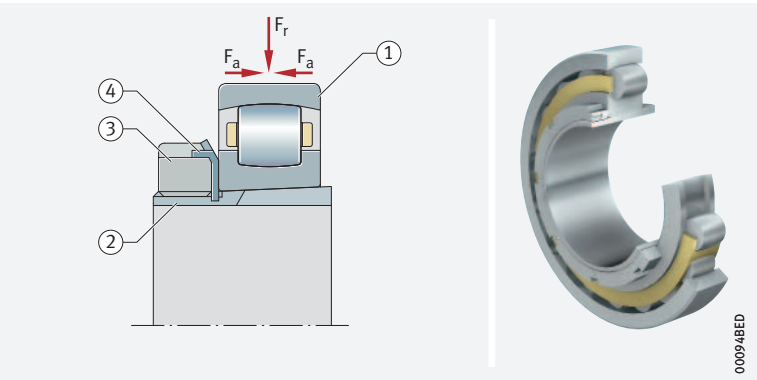

1.2 Load carrying capacity

Suitable for high radial loads

The rolling elements are in line contact with the raceways. As a result, barrel roller bearings have a very high radial load carrying capacity ➤*655*|*2*. In contrast, they have only a low axial load carrying capacity.

Axial load carrying capacity of bearings with adapter sleeve

Where bearings with adapter sleeves are located on a smooth shaft without a fixed stop (e.g. rigid shoulder), their axial load carrying capacity is dependent on the friction between the shaft and the sleeve.

If there is any uncertainty regarding the axial load carrying capacity of the adapter sleeve location method, please consult Schaeffler.

1.3 Compensation of angular misalignments

Barrel roller bearings compensate dynamic and static angular misalignments

Due to the concave rolling element raceway in the outer ring, barrel roller bearings are capable of angular adjustment ➤654|1.1. As a result, they permit skewing between the outer and inner ring within certain limits, without causing damage to the bearings, and can thus compensate misalignments, shaft deflections and housing deformations.

Permissible adjustment angle

With a rotating inner ring, barrel roller bearings can swivel up to 4° from their central position

The magnitude of alignment and angular defects may only be so large when the bearings are mounted that the contact surfaces of the rolling elements under load still lie within the width of the raceway. Under normal operating conditions and with a rotating inner ring, barrel roller bearings can swivel by up to 4° from their central position. The extent to which this value can be used for skewing between the inner and outer ring is, however, essentially dependent on the design of the bearing arrangement.

If the outer ring rotates or the inner ring undergoes tumbling motion, the angular adjustment facility is smaller. In such cases, please consult Schaeffler.

1.4 Lubrication

Oil or grease lubrication

The bearings are not greased. They must be lubricated with oil or grease and can be lubricated from the end faces.

Compatibility with plastic cages

When using bearings with plastic cages, compatibility between the lubricant and the cage material must be ensured if synthetic oils, lubricating greases with a synthetic oil base or lubricants containing a high proportion of EP additives are used.

Observe oil change intervals

Aged oil and additives in the oil can impair the operating life of plastics at high temperatures. As a result, stipulated oil change intervals must be strictly observed.

1.5 Sealing

The bearings are open; provide seals in the adjacent construction

Barrel roller bearings are supplied without seals. As a result, sealing of the bearing position must be carried out in the adjacent construction. The sealing system should reliably prevent:

- moisture and contaminants from entering the bearing
- the egress of lubricant from the bearing position

1.6 Speeds

The product tables give the limiting speed n_G. This is the kinematically permissible speed of a bearing. Even under favourable mounting and operating conditions, this value should not be exceeded without prior consultation with Schaeffler ➤64.

1.7 Noise

Schaeffler Noise Index

The Schaeffler Noise Index (SGI) is not yet available for this bearing type ➤69. The data for these bearing series will be introduced and updated in stages.

Further information:

- ***medias*** *https://medias.schaeffler.com*

1.8 Temperature range

✎ *Limiting values*

The operating temperature of the bearings is limited by:

- the dimensional stability of the bearing rings and rolling elements
- the cage
- the lubricant

Possible operating temperatures of barrel roller bearings ➤*657*|▦ *1*.

▦ **1**
Permissible temperature ranges

Operating temperature	Barrel roller bearings	
	with brass cage	with polyamide cage PA66
	–30 °C to +150 °C, for D > 120 mm up to +200 °C	–30 °C to +120 °C

In the event of anticipated temperatures which lie outside the stated values, please contact Schaeffler.

1.9 Cages

Standard cages for barrel roller bearings ➤*657*|▦ *2*.

▦ **2**
Cage, cage suffix, bore code

Bearing series	Solid cage made from polyamide PA66 TVP	Solid brass cage MB
	Bore code	
202	up to 16	from 17
203	up to 12	from 13

For high continuous temperatures and applications with difficult operating conditions, bearings with brass cages should be used. If there is any uncertainty regarding cage suitability, please consult Schaeffler.

1.10 Internal clearance

Radial internal clearance – bearings with cylindrical bore

✎ *The standard is CN*

Barrel roller bearings with cylindrical bore are manufactured as standard with radial internal clearance CN (normal) ➤*657*|▦ *3*. CN is not stated in the designation.

Certain sizes are also available by agreement with the smaller internal clearance C2 and with the larger internal clearance C3 and C4.

Values for radial internal clearance ➤*657*|▦ *3*. These are valid for bearings which are free from load and measurement forces (without elastic deformation).

▦ **3**
Radial internal clearance of barrel roller bearings with cylindrical bore

Nominal bore diameter d mm		Radial internal clearance							
		C2 µm		CN µm		C3 µm		C4 µm	
over	incl.	min.	max.	min.	max.	min.	max.	min.	max.
–	30	2	9	9	17	17	28	28	40
30	40	3	10	10	20	20	30	30	45
40	50	3	13	13	23	23	35	35	50
50	65	4	15	15	27	27	40	40	55
65	80	5	20	20	35	35	55	55	75
80	100	7	25	25	45	45	65	65	90

continued ▼

3
Radial internal clearance of barrel roller bearings with cylindrical bore

Nominal bore diameter d mm		Radial internal clearance							
		C2 (Group 2) µm		CN (Group N) µm		C3 (Group 3) µm		C4 (Group 4) µm	
over	incl.	min.	max.	min.	max.	min.	max.	min.	max.
100	120	10	30	30	50	50	70	70	95
120	140	15	35	35	55	55	80	80	110
140	160	20	40	40	65	65	95	95	125
160	180	25	45	45	70	70	100	100	130
180	225	30	50	50	75	75	105	105	135
225	250	35	55	55	80	80	110	110	140
250	280	40	60	60	85	85	115	115	145

continued ▲

Radial internal clearance – bearings with tapered bore

✎ *C3 is normally used*

Barrel roller bearings with tapered bore are normally manufactured with the larger radial internal clearance C3 ➤*658*|▦ *4*.

Certain sizes are also available by agreement with the smaller internal clearance C2, with internal clearance CN (normal) and with the larger internal clearance C4.

Values for radial internal clearance ➤*658*|▦ *4*. These are valid for bearings which are free from load and measurement forces (without elastic deformation).

4
Radial internal clearance of barrel roller bearings with tapered bore

Nominal bore diameter d mm		Radial internal clearance							
		C2 µm		CN µm		C3 µm		C4 µm	
over	incl.	min.	max.	min.	max.	min.	max.	min.	max.
–	30	9	17	17	28	28	40	40	55
30	40	10	20	20	30	30	45	45	60
40	50	13	23	23	35	35	50	50	65
50	65	15	27	27	40	40	55	55	75
65	80	20	35	35	55	55	75	75	95
80	100	25	45	45	65	65	90	90	120
100	120	30	50	50	70	70	95	95	125
120	140	35	55	55	80	80	110	110	140
140	160	40	65	65	95	95	125	125	155
160	180	45	70	70	100	100	130	130	160
180	225	50	75	75	105	105	135	135	165
225	250	55	80	80	110	110	140	140	170
250	280	60	85	85	115	115	145	145	175

1.11 Dimensions, tolerances

Dimension standards

The main dimensions of barrel roller bearings correspond to DIN 635-1:2010. Nominal dimensions of barrel roller bearings ➤*666*|▦.

Chamfer dimensions

The limiting dimensions for chamfer dimensions correspond to DIN 620-6:2004. Overview and limiting values ➤*137*|*7.11*. Nominal value of chamfer dimension ➤*666*|▦.

Tolerances

The tolerances for the dimensional and running accuracy of barrel roller bearings correspond to tolerance class Normal in accordance with ISO 492:2014. Tolerance values in accordance with ISO 492 ➤124|8.

1.12 Suffixes

Suffixes describe the design and features of a bearing in more detail.

5 *Suffixes and corresponding descriptions*

Suffix	Description of suffix	
C2	Radial internal clearance C2 (smaller than normal)	Special design, available by agreement
C3	Radial internal clearance C3 (larger than normal)	Normally used for bearings with tapered bore, available by agreement for bearings with cylindrical bore
C4	Radial internal clearance C4 (larger than C3)	Special design, available by agreement
CN	Radial internal clearance CN (normal)	Standard for bearings with cylindrical bore, available by agreement for bearings with tapered bore
K	Tapered bore, taper 1:12	Standard
MB	Solid brass cage, guided on inner ring	Standard, cage material dependent on bore code
TVP	Solid cage made from glass fibre reinforced polyamide PA66	

1.13 Structure of bearing designation

With ***medias*** interchange, equivalent Schaeffler bearing designations can be determined for bearing designations from other rolling bearing manufacturers *https://www.schaeffler.de/std/1B69*.

Examples of composition of bearing designation

The designation of bearings follows a set model.
The composition of designations is subject to DIN 623-1 ➤102|10.

4 *Barrel roller bearing with cylindrical bore: designation structure*

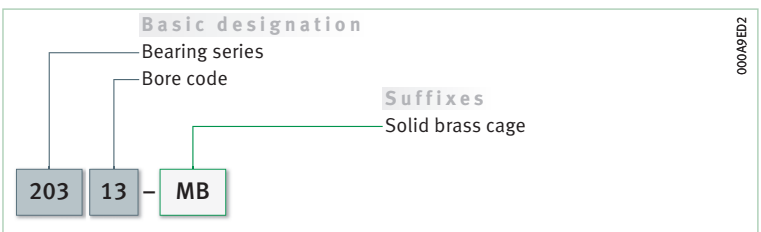

5 *Barrel roller bearing with tapered bore and adapter sleeve: designation structure*

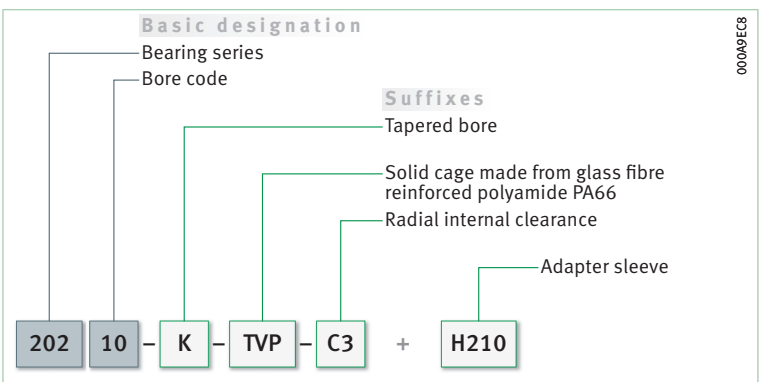

1.14 Dimensioning

Equivalent dynamic bearing load

✎ *$P = F_r$ under purely radial load of constant magnitude and direction*

The basic rating life equation $L = (C_r/P)^p$ used in the dimensioning of bearings under dynamic load assumes a load of constant magnitude and direction. In radial bearings, this is a purely radial load F_r. If this condition is met, the bearing load F_r is used in the rating life equation for P ($P = F_r$).

✎ *P is a substitute force for combined load and various load cases*

If this condition is not met, a constant radial force must first be determined for the rating life calculation that (in relation to the rating life) represents an equivalent load. This force is known as the equivalent dynamic bearing load P.

To calculate P for barrel roller bearings under dynamic load ➤*660*| *1*.

1
Equivalent dynamic load

$$P = F_r + 9{,}5 \cdot F_a$$

Legend

P	N	Equivalent dynamic bearing load
F_r	N	Radial load
F_a	N	Axial load.

Equivalent static bearing load

For barrel roller bearings subjected to static load ➤*660*| *2*.

2
Equivalent static load

$$P_0 = F_{0r} + 5 \cdot F_{0a}$$

Legend

P_0	N	Equivalent static bearing load
F_{0r}, F_{0a}	N	Largest radial or axial load present (maximum load).

Static load safety factor

✎ *$S_0 = C_0/P_0$*

In addition to the basic rating life L (L_{10h}), it is also always necessary to check the static load safety factor S_0 ➤*660*| *3*.

3
Static load safety factor

$$S_0 = \frac{C_0}{P_0}$$

Legend

S_0	–	Static load safety factor
C_0	N	Basic static load rating
P_0	N	Equivalent static bearing load.

1.15 Minimum load

✎ *In order to prevent damage due to slippage, a minimum radial load of $P > C_{0r}/60$ is required*

In order that no slippage occurs between the contact partners, the barrel roller bearings must be constantly subjected to a sufficiently high load. Based on experience, a minimum radial load of the order of $P > C_{0r}/60$ is thus necessary. In most cases, however, the radial load is already higher than the requisite minimum load due to the weight of the supported parts and the external forces.

If the minimum radial load is lower than indicated above, please consult Schaeffler.

1.16 Design of bearing arrangements

Support bearing rings over their entire circumference and width

In order to allow full utilisation of the load carrying capacity of the bearings and achieve the requisite rating life, the bearing rings must be rigidly and uniformly supported by means of contact surfaces over their entire circumference and over the entire width of the raceway. Support can be provided by means of a cylindrical or tapered seating surface ➤662|6 to ➤662|8. The seating and contact surfaces should not be interrupted by grooves, holes or other recesses. The accuracy of mating parts must meet specific requirements ➤663|6 to ➤663|8.

Radial location – fit recommendations for bearings with cylindrical bore

For secure radial location, tight fits are necessary

In addition to supporting the rings adequately, the bearings must also be securely located in a radial direction, to prevent creep of the bearing rings on the mating parts under load. This is generally achieved by means of tight fits between the bearing rings and the mating parts. If the rings are not secured adequately or correctly, this can cause severe damage to the bearings and adjacent machine parts. Influencing factors, such as the conditions of rotation, magnitude of the load, internal clearance, temperature conditions, design of the mating parts and the mounting and dismounting options must be taken into consideration in the selection of fits.

If shock type loads occur, tight fits (transition fit or interference fit) are required to prevent the rings from coming loose at any point. Clearance, transition or interference fits ➤152|6 and ➤160|7.

The following information provided in Technical principles must be taken into consideration in the design of bearing arrangements:

- criteria for selection of fits ➤146
- conditions of rotation ➤147
- tolerance classes for cylindrical shaft seats (radial bearings) ➤149|2
- shaft fits ➤152|6
- tolerance classes for bearing seats in housings (radial bearings) ➤150|4
- housing fits ➤160|7
- shaft tolerances for adapter sleeves and withdrawal sleeves ➤168|8

Axial location – location methods for bearings with cylindrical bore

The bearings must also be securely located in an axial direction

As a tight fit alone is not normally sufficient to also locate the bearing rings securely on the shaft and in the housing bore in an axial direction, this must usually be achieved by means of an additional axial location or retention method. The axial location of the bearing rings must be matched to the type of bearing arrangement. Shaft and housing shoulders, housing covers, nuts, spacer rings, retaining rings, adapter and withdrawal sleeves etc., are fundamentally suitable.

Location of bearings with tapered bore

Location by means of locknut and tab washer

If a bearing with a tapered bore is mounted directly on a tapered journal, the bearing can be axially located with ease using a locknut and tab washer ➤662|6.

6
Barrel roller bearing with tapered bore, mounted directly on the tapered shaft journal

① *Tapered journal with fixing thread*
② *Locknut*
③ *Tab washer*

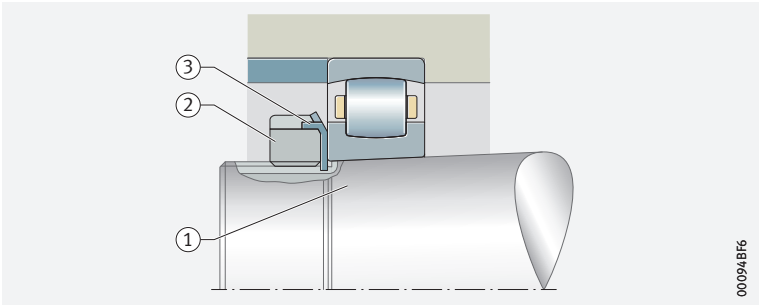

Location of bearings by means of adapter sleeve

Mounting can be carried out quickly and reliably by means of wrench sets from Schaeffler

Barrel roller bearings with a tapered bore can be located easily and with operational reliably on smooth or stepped shafts by means of an adapter sleeve ➤662|7. The adapter sleeves do not need to be secured on the shaft by any additional means. The bearings can be positioned at any point on smooth shafts. Axial load carrying capacity of bearing arrangements by means of adapter sleeve connection ➤655|1.2.

7
Barrel roller bearing with adapter sleeve, located on smooth shaft

① *Adapter sleeve*
② *Locknut*
③ *Tab washer*

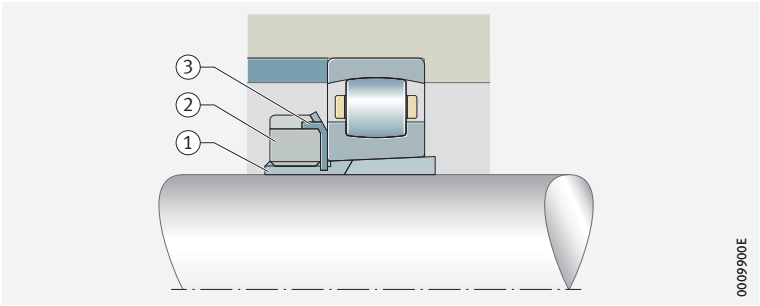

Location by means of adapter sleeve, axial abutment by means of a support ring

If very high axial forces are present, a support ring can also be used to provide axial abutment ➤662|8. In this instance, the mounting dimensions of the support ring B_a and d_b in the product tables must be observed➤672|▦.

8
Stepped shaft, axial abutment by means of a support ring

① *Adapter sleeve*
② *Locknut*
③ *Tab washer*
④ *Support ring*
⑤ *Shaft shoulder*

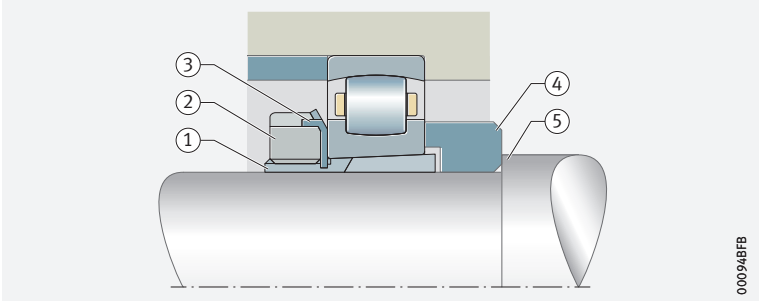

Dimensional, geometrical and running accuracy of cylindrical bearing seats

A minimum of IT6 should be provided for the shaft seat and a minimum of IT7 for the housing seat

The accuracy of the cylindrical bearing seat on the shaft and in the housing should correspond to the accuracy of the bearing used. For barrel roller bearings with the tolerance class Normal, the shaft seat should correspond to a minimum of standard tolerance grade IT6 and the housing seat to a minimum of IT7. Guide values for the geometrical and positional tolerances of bearing seating surfaces ➤663|▦6. Tolerances t_1 to t_3 in accordance with ➤170|⧉11. Numerical values for IT grades ➤663|▦7.

▦6 *Guide values for the geometrical and positional tolerances of bearing seating surfaces*

Bearing tolerance class		Bearing seating surface	Standard tolerance grades to ISO 286-1 (IT grades)			
to ISO 492	to DIN 620		Diameter tolerance	Roundness tolerance t_1	Parallelism tolerance t_2	Total axial runout tolerance of abutment shoulder t_3
Normal	PN (P0)	Shaft	IT6 (IT5)	Circumferential load IT4/2	Circumferential load IT4/2	IT4
				Point load IT5/2	Point load IT5/2	
		Housing	IT7 (IT6)	Circumferential load IT5/2	Circumferential load IT5/2	IT5
				Point load IT6/2	Point load IT6/2	

▦7 *Numerical values for ISO standard tolerances (IT grades) to ISO 286-1:2010*

IT grade	Nominal dimension in mm						
	over **18** incl. **30**	**30** **50**	**50** **80**	**80** **120**	**120** **180**	**180** **250**	**250** **315**
	Values in µm						
IT4	6	7	8	10	12	14	16
IT5	9	11	13	15	18	20	23
IT6	13	16	19	22	25	29	32
IT7	21	25	30	35	40	46	52

Roughness of cylindrical bearing seating surfaces

Ra must not be too high

The roughness of the bearing seats must be matched to the tolerance class of the bearings. The mean roughness value Ra must not be too high, in order to maintain the interference loss within limits. The shafts must be ground, while the bores must be precision turned. Guide values as a function of the IT grade of bearing seating surfaces ➤663|▦8.

▦8 *Roughness values for cylindrical bearing seating surfaces – guide values*

Nominal diameter of the bearing seat d (D) mm		Recommended mean roughness value for ground bearing seats Ramax µm			
		Diameter tolerance (IT grade)			
over	incl.	IT7	IT6	IT5	IT4
–	80	1,6	0,8	0,4	0,2
80	500	1,6	1,6	0,8	0,4

Tolerances for tapered bearing seats

Specifications for tapered bearing seats

For bearings located directly on a tapered shaft journal ➤662|⧉6, the guide values are in accordance with: Technical principles | Design of bearing arrangements ➤173|⧉12.

Mounting dimensions for the contact surfaces of bearing rings

The contact surfaces for the rings must be of sufficient height

The mounting dimensions of the shaft and housing shoulders, and spacer rings etc., must ensure that the contact surfaces for the bearing rings are of sufficient height. However, they must also reliably prevent rotating parts of the bearing from grazing stationary parts. Proven mounting dimensions for the radii and diameters of the abutment shoulders are given in the product tables. These dimensions are limiting dimensions (maximum or minimum dimensions); the actual values should not be higher or lower than specified.

Suitable bearing housings for barrel roller bearings

A large range of housings is available

For economical, operationally reliable and easily interchangeable bearing arrangement units, the barrel roller bearings can also be combined with Schaeffler bearing housings ➤*664*| *9*. These easy-to-fit units fulfil all of the requirements for modern machine and plant designs with favourable maintenance-related characteristics.

Due to the large number of application areas, an extensive range of split plummer block housings and flanged housings is available for bearings with cylindrical and tapered bores. Detailed information on bearing housings can be found in publication GK 1 *https://www.schaeffler.de/std/1D54*. This book can be ordered from Schaeffler.

9
Split plummer block housing with a barrel roller bearing

① *Split plummer block housing SNV*
② *Barrel roller bearing*

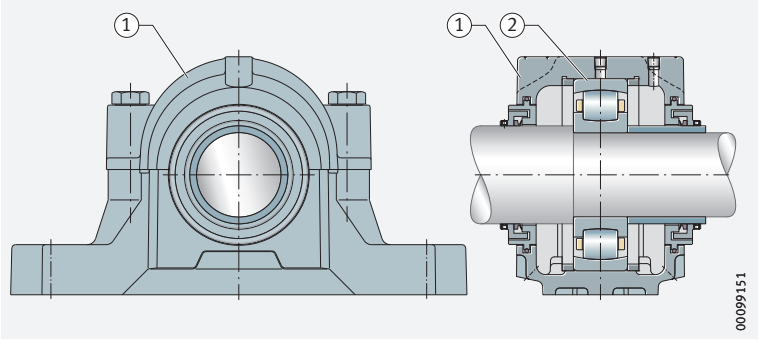

1.17 Mounting and dismounting

The mounting and dismounting options for barrel roller bearings, by thermal, hydraulic or mechanical methods, must be taken into consideration in the design of the bearing position.

Ensure that the bearings are not damaged during mounting

Barrel roller bearings are not separable. In the mounting of non-separable bearings, the mounting forces must always be applied to the bearing ring with a tight fit.

Bearings with tapered bore – methods for achieving a sufficiently tight fit

Suitable methods: measuring the reduction in radial internal clearance or axial drive-up distance

Bearings with a tapered bore are mounted with a tight fit on the shaft or adapter and withdrawal sleeve. The tight fit can be checked:

- by measuring the reduction in radial internal clearance or
- by measuring the axial drive-up distance of the inner ring on the tapered bearing seat

The malfunction-free operation of barrel roller bearings presupposes that these have been mounted correctly. An insufficient operating clearance or inadequately tight fit on the shaft generally leads to bearing damage.

If there is any uncertainty regarding the practical application of both methods, Schaeffler must always be consulted.

Schaeffler Mounting Handbook

Rolling bearings must be handled with great care

Rolling bearings are well-proven precision machine elements for the design of economical and reliable bearing arrangements, which offer high operational security. In order that these products can function correctly and achieve the envisaged operating life without detrimental effect, they must be handled with care.

The Schaeffler Mounting Handbook MH 1 gives comprehensive information about the correct storage, mounting, dismounting and maintenance of rotary rolling bearings *https://www.schaeffler.de/std/1D53*. It also provides information which should be observed by the designer, in relation to the mounting, dismounting and maintenance of bearings, in the original design of the bearing position. This book is available from Schaeffler on request.

1.18 Legal notice regarding data freshness

The further development of products may also result in technical changes to catalogue products

Of central interest to Schaeffler is the further development and optimisation of its products and the satisfaction of its customers. In order that you, as the customer, can keep yourself optimally informed about the progress that is being made here and with regard to the current technical status of the products, we publish any product changes which differ from the printed version in our electronic product catalogue.

§ We therefore reserve the right to make changes to the data and illustrations in this catalogue. This catalogue reflects the status at the time of printing. More recent publications released by us (as printed or digital media) will automatically precede this catalogue if they involve the same subject. Therefore, please always use our electronic product catalogue to check whether more up-to-date information or modification notices exist for your desired product.

Link to electronic product catalogue

The following link will take you to the Schaeffler electronic product catalogue: *https://medias.schaeffler.com*.

1.19 Further information

In addition to the data in this chapter, the following chapters in Technical principles must also be observed in the design of bearing arrangements:

- Determining the bearing size ➤*34*
- Rigidity ➤*54*
- Friction and increases in temperature ➤*56*
- Speeds ➤*64*
- Bearing data ➤*97*
- Lubrication ➤*70*
- Sealing ➤*185*
- Design of bearing arrangements ➤*141*
- Mounting and dismounting ➤*194*

Barrel roller bearings

With cylindrical or tapered bore

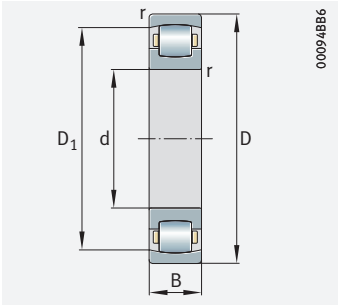

Cylindrical bore

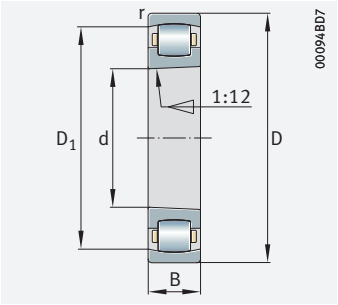

Tapered bore

d = 20 – 65 mm

Main dimensions			Basic load ratings		Fatigue limit load	Limiting speed	Mass	Designation
d	D	B	dyn. C_r	stat. C_{0r}	C_{ur}	n_G	m	➤*659|1.12* ➤*659|1.13*
			N	N	N	min^{-1}	≈ kg	
20	47	14	20 400	19 400	1 730	13 100	0,114	**20204-TVP**
	52	15	27 000	24 600	2 360	11 800	0,152	**20304-TVP**
25	52	15	24 100	24 900	2 260	11 500	0,132	**20205-K-TVP-C3**
	52	15	24 100	24 900	2 260	11 500	0,134	**20205-TVP**
	62	17	36 000	35 000	3 050	9 800	0,243	**20305-TVP**
30	62	16	28 000	28 500	2 950	10 800	0,203	**20206-K-TVP-C3**
	62	16	28 000	28 500	2 950	10 800	0,207	**20206-TVP**
	72	19	48 500	48 500	4 350	8 800	0,37	**20306-TVP**
35	72	17	41 000	43 000	5 000	9 700	0,296	**20207-K-TVP-C3**
	72	17	41 000	43 000	5 000	9 700	0,301	**20207-TVP**
	80	21	58 000	61 000	5 500	8 000	0,493	**20307-TVP**
40	80	18	49 500	53 000	5 200	8 700	0,38	**20208-K-TVP-C3**
	80	18	49 500	53 000	5 200	8 700	0,386	**20208-TVP**
	90	23	76 000	81 000	7 300	7 000	0,671	**20308-TVP**
45	85	19	52 000	58 000	6 100	8 400	0,433	**20209-K-TVP-C3**
	85	19	52 000	58 000	6 100	8 400	0,441	**20209-TVP**
	100	25	87 000	94 000	8 600	6 500	0,914	**20309-TVP**
50	90	20	59 000	69 000	7 200	7 700	0,489	**20210-K-TVP-C3**
	90	20	59 000	69 000	7 200	7 700	0,499	**20210-TVP**
	110	27	108 000	118 000	10 600	5 800	1,17	**20310-TVP**
55	100	21	74 000	85 000	9 000	7 100	0,642	**20211-K-TVP-C3**
	100	21	74 000	85 000	9 000	7 100	0,653	**20211-TVP**
	120	29	120 000	138 000	12 600	5 400	1,49	**20311-K-TVP-C3**
	120	29	120 000	138 000	12 600	5 400	1,53	**20311-TVP**
60	110	22	85 000	100 000	11 000	6 600	0,822	**20212-K-TVP-C3**
	110	22	85 000	100 000	11 000	6 600	0,836	**20212-TVP**
	130	31	147 000	171 000	15 400	4 950	1,89	**20312-K-TVP-C3**
	130	31	147 000	171 000	15 400	4 950	1,92	**20312-TVP**
65	120	23	94 000	117 000	12 700	6 000	1,07	**20213-K-TVP-C3**
	120	23	94 000	117 000	12 700	6 000	1,08	**20213-TVP**
	140	33	168 000	195 000	18 200	4 700	2,14	**20313-K-MB-C3**
	140	33	168 000	195 000	18 200	4 700	2,18	**20313-MB**

medias *https://www.schaeffler.de/std/1F9A*

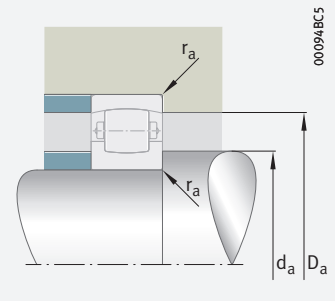

Mounting dimensions

Dimensions			Mounting dimensions		
d	r min.	D_1 ≈	d_a min.	D_a max.	r_a max.
20	1	39	25,6	41,4	1
	1,1	43,5	27	45	1
25	1	43,9	30,6	46,4	1
	1	43,9	30,6	46,4	1
	1,1	51,9	32	55	1
30	1	53	35,6	56,4	1
	1	53	35,6	56,4	1
	1,1	60,7	37	65	1
35	1,1	62,3	42	65	1
	1,1	62,3	42	65	1
	1,5	67,4	44	71	1,5
40	1,1	70,1	47	73	1
	1,1	70,1	47	73	1
	1,5	76,8	49	81	1,5
45	1,1	74,6	52	78	1
	1,1	74,6	52	78	1
	1,5	85,2	54	91	1,5
50	1,1	79,5	57	83	1
	1,1	79,5	57	83	1
	2	94,4	61	99	2
55	1,5	89,2	64	91	1,5
	1,5	89,2	64	91	1,5
	2	101,7	66	109	2
	2	101,7	66	109	2
60	1,5	97,8	69	101	1,5
	1,5	97,8	69	101	1,5
	2,1	111,2	72	118	2,1
	2,1	111,2	72	118	2,1
65	1,5	105,1	74	111	1,5
	1,5	105,1	74	111	1,5
	2,1	120,6	77	128	2,1
	2,1	120,6	77	128	2,1

Barrel roller bearings

With cylindrical or tapered bore

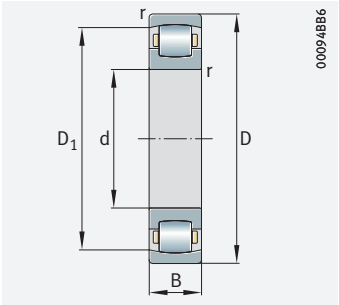

Cylindrical bore

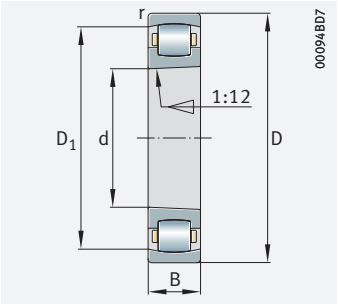

Tapered bore

d = 70 – 140 mm

Main dimensions			Basic load ratings		Fatigue limit load	Limiting speed	Mass	Designation
d	D	B	dyn. C_r	stat. C_{0r}	C_{ur}	n_G	m	➤659|1.12 ➤659|1.13
			N	N	N	min^{-1}	≈ kg	
70	125	24	107 000	133 000	14 300	5 700	1,17	**20214-TVP**
	150	35	184 000	215 000	19 900	4 450	3,15	**20314-MB**
75	130	25	112 000	143 000	16 400	5 500	1,25	**20215-K-TVP-C3**
	130	25	112 000	143 000	16 400	5 500	1,28	**20215-TVP**
	160	37	216 000	255 000	22 800	4 100	3,76	**20315-MB**
80	140	26	126 000	163 000	15 900	5 200	1,56	**20216-K-TVP-C3**
	140	26	126 000	163 000	15 900	5 200	1,58	**20216-TVP**
	170	39	243 000	285 000	26 000	3 950	4,58	**20316-MB**
85	150	28	155 000	201 000	20 800	4 750	2,19	**20217-K-MB-C3**
	150	28	155 000	201 000	20 800	4 750	2,22	**20217-MB**
	180	41	270 000	320 000	29 000	3 750	5,25	**20317-MB**
90	160	30	174 000	220 000	22 500	4 550	2,68	**20218-K-MB-C3**
	160	30	174 000	220 000	22 500	4 550	2,72	**20218-MB**
	190	43	300 000	360 000	31 500	3 500	6,17	**20318-K-MB-C3**
	190	43	300 000	360 000	31 500	3 500	6,25	**20318-MB**
95	170	32	206 000	265 000	26 500	4 200	3,19	**20219-MB**
	200	45	330 000	400 000	34 500	3 400	7,29	**20319-MB**
100	180	34	225 000	290 000	28 500	4 000	3,9	**20220-K-MB-C3**
	180	34	225 000	290 000	28 500	4 000	3,96	**20220-MB**
	215	47	365 000	440 000	38 500	3 250	8,58	**20320-K-MB-C3**
	215	47	365 000	440 000	38 500	3 250	8,69	**20320-MB**
105	190	36	244 000	315 000	31 000	3 850	4,74	**20221-MB**
110	200	38	285 000	370 000	35 000	3 600	5,45	**20222-K-MB-C3**
	200	38	285 000	370 000	35 000	3 600	5,53	**20222-MB**
	240	50	405 000	480 000	46 000	3 000	11,6	**20322-MB**
120	215	40	305 000	415 000	38 500	3 350	6,51	**20224-K-MB-C3**
	215	40	305 000	415 000	38 500	3 350	6,6	**20224-MB**
	260	55	490 000	630 000	52 000	2 750	15,2	**20324-MB**
130	230	40	330 000	450 000	43 500	3 300	7,21	**20226-K-MB-C3**
	230	40	330 000	450 000	43 500	3 300	7,31	**20226-MB**
	280	58	560 000	720 000	60 000	2 600	18,4	**20326-MB**
140	250	42	395 000	540 000	51 000	3 050	8,98	**20228-K-MB-C3**
	250	42	395 000	540 000	51 000	3 050	9,09	**20228-MB**
	300	62	650 000	840 000	68 000	2 370	22,5	**20328-MB**

medias *https://www.schaeffler.de/std/1F9A*

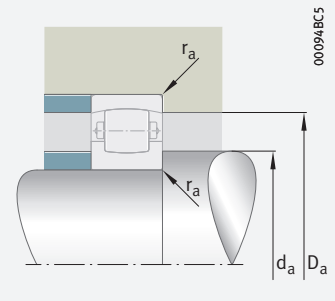

Mounting dimensions

Dimensions			Mounting dimensions		
d	r	D_1	d_a	D_a	r_a
	min.	≈	min.	max.	max.
70	1,5	111	79	116	1,5
	2,1	128,7	82	138	2,1
75	1,5	115,9	84	121	1,5
	1,5	115,9	84	121	1,5
	2,1	138,1	87	148	2,1
80	2	124,5	91	129	2
	2	124,5	91	129	2
	2,1	147,5	92	158	2,1
85	2	133,9	96	139	2
	2	133,9	96	139	2
	3	156,9	99	166	2,5
90	2	143,8	101	149	2
	2	143,8	101	149	2
	3	165,1	104	176	2,5
	3	165,1	104	176	2,5
95	2,1	152,7	107	158	2,1
	3	174,5	109	186	2,5
100	2,1	160,8	112	168	2,1
	2,1	160,8	112	168	2,1
	3	186,6	114	201	2,5
	3	186,6	114	201	2,5
105	2,1	169,2	117	178	2,1
110	2,1	178,6	122	188	2,1
	2,1	178,6	122	188	2,1
	3	208,1	124	226	2,5
120	2,1	191,1	132	203	2,1
	2,1	191,1	132	203	2,1
	3	222,3	134	246	2,5
130	3	205,7	144	216	2,5
	3	205,7	144	216	2,5
	4	240,3	147	263	3
140	3	223,9	154	236	2,5
	3	223,9	154	236	2,5
	4	257,9	157	283	3

Barrel roller bearings

With cylindrical or tapered bore

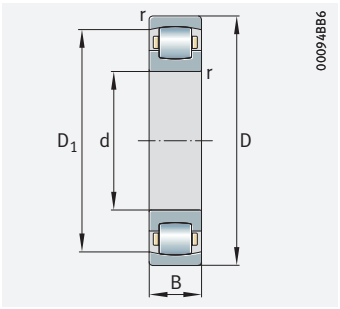

Cylindrical bore

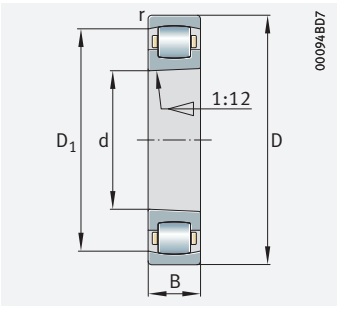

Tapered bore

d = 150 – 200 mm

Main dimensions			Basic load ratings		Fatigue limit load	Limiting speed	Mass	Designation
d	D	B	dyn. C_r	stat. C_{0r}	C_{ur}	n_G	m	➤659|1.12 ➤659|1.13
			N	N	N	min^{-1}	≈ kg	
150	270	45	430 000	610 000	56 000	2 850	11,6	**20230-K-MB-C3**
	270	45	430 000	610 000	56 000	2 850	11,7	**20230-MB**
	320	65	720 000	950 000	76 000	2 250	26,9	**20330-MB**
160	290	48	500 000	720 000	65 000	2 650	14,4	**20232-K-MB-C3**
	290	48	500 000	720 000	65 000	2 650	14,5	**20232-MB**
170	310	52	570 000	830 000	72 000	2 460	17,9	**20234-MB**
180	320	52	590 000	850 000	75 000	2 420	18,4	**20236-MB**
190	340	55	650 000	950 000	82 000	2 290	22,5	**20238-MB**
200	360	58	730 000	1 080 000	92 000	2 180	26,7	**20240-MB**

medias *https://www.schaeffler.de/std/1F9A*

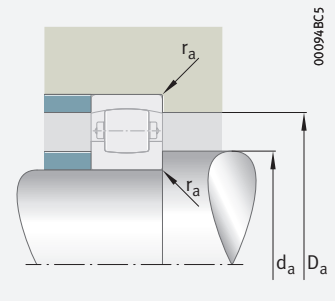

Mounting dimensions

Dimensions			Mounting dimensions		
d	r	D_1	d_a	D_a	r_a
	min.	≈	min.	max.	max.
150	3	238,6	164	256	2,5
	3	238,6	164	256	2,5
	4	275,8	167	303	3
160	3	256,5	174	276	2,5
	3	256,5	174	276	2,5
170	4	273,1	187	293	3
180	4	284,3	197	303	3
190	4	301,2	207	323	3
200	4	319	217	343	3

Barrel roller bearings

With adapter sleeve

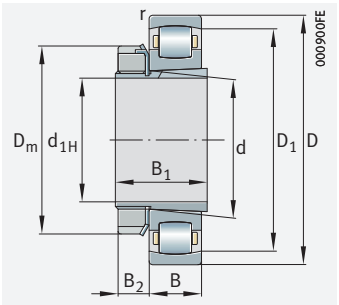

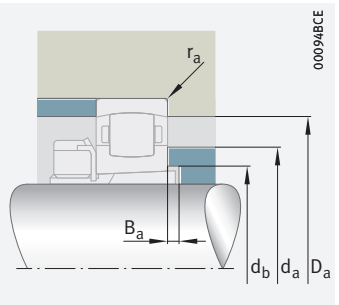

Mounting dimensions

d_{1H} = 20 – 140 mm

Main dimensions				Basic load ratings		Fatigue limit load	Limiting speed	Mass m		Designation ➤659|1.12 ➤659|1.13	
d_{1H}	d	D	B	dyn. C_r N	stat. C_{0r} N	C_{ur} N	n_G min^{-1}	Bearing ≈ kg	Adapter sleeve ≈ kg	Bearing	Adapter sleeve
20	25	52	15	24 100	24 900	2 260	11 500	0,132	0,07	**20205-K-TVP-C3**	**H205**
25	30	62	16	28 000	28 500	2 950	10 800	0,203	0,1	**20206-K-TVP-C3**	**H206**
30	35	72	17	41 000	43 000	5 000	9 700	0,296	0,136	**20207-K-TVP-C3**	**H207**
35	40	80	18	49 500	53 000	5 200	8 700	0,38	0,177	**20208-K-TVP-C3**	**H208**
40	45	85	19	52 000	58 000	6 100	8 400	0,433	0,23	**20209-K-TVP-C3**	**H209**
45	50	90	20	59 000	69 000	7 200	7 700	0,489	0,276	**20210-K-TVP-C3**	**H210**
50	55	100	21	74 000	85 000	9 000	7 100	0,642	0,319	**20211-K-TVP-C3**	**H211**
	55	120	29	120 000	138 000	12 600	5 400	1,49	0,358	**20311-K-TVP-C3**	**H311**
55	60	110	22	85 000	100 000	11 000	6 600	0,822	0,35	**20212-K-TVP-C3**	**H212**
	60	130	31	147 000	171 000	15 400	4 950	1,89	0,401	**20312-K-TVP-C3**	**H312**
60	65	120	23	94 000	117 000	12 700	6 000	1,07	0,4	**20213-K-TVP-C3**	**H213**
	65	140	33	168 000	195 000	18 200	4 700	2,14	0,471	**20313-K-MB-C3**	**H313**
65	75	130	25	112 000	143 000	16 400	5 500	1,25	0,71	**20215-K-TVP-C3**	**H215**
70	80	140	26	126 000	163 000	15 900	5 200	1,56	0,89	**20216-K-TVP-C3**	**H216**
75	85	150	28	155 000	201 000	20 800	4 750	2,19	1,03	**20217-K-MB-C3**	**H217**
80	90	160	30	174 000	220 000	22 500	4 550	2,68	1,21	**20218-K-MB-C3**	**H218**
	90	190	43	300 000	360 000	31 500	3 500	6,17	1,41	**20318-K-MB-C3**	**H318**
90	100	180	34	225 000	290 000	28 500	4 000	3,9	1,52	**20220-K-MB-C3**	**H220**
	100	215	47	365 000	440 000	38 500	3 250	8,58	1,76	**20320-K-MB-C3**	**H320**
100	110	200	38	285 000	370 000	35 000	3 600	5,45	1,95	**20222-K-MB-C3**	**H222**
110	120	215	40	305 000	415 000	38 500	3 350	6,51	2,01	**20224-K-MB-C3**	**H3024**
115	130	230	40	330 000	450 000	43 500	3 300	7,21	2,96	**20226-K-MB-C3**	**H3026**
125	140	250	42	395 000	540 000	51 000	3 050	8,98	3,3	**20228-K-MB-C3**	**H3028**
135	150	270	45	430 000	610 000	56 000	2 850	11,6	4,02	**20230-K-MB-C3**	**H3030**
140	160	290	48	500 000	720 000	65 000	2 650	14,4	5,44	**20232-K-MB-C3**	**H3032**

medias *https://www.schaeffler.de/std/1F9A*

Dimensions						Mounting dimensions				
d_{1H}	r min.	D_1 ≈	D_m ≈	B_1	B_2 ≈	d_a max.	D_a max.	d_b min.	B_a min.	r_a max.
20	1	43,9	25	26	8,25	33	46,4	28	6	1
25	1	53	45	27	8,25	39	56,4	33	5	1
30	1,1	62,3	52	29	9,25	45	65	38	5	1
35	1,1	70,1	58	31	10,25	51	73	43	5	1
40	1,1	74,6	65	33	11,25	56	78	48	5	1
45	1,1	79,5	70	35	12,25	61	83	53	5	1
50	1,5	89,2	75	37	12,5	68	91	60	6	1,5
	2	101,7	75	45	12,5	72	109	60	6	2
55	1,5	97,8	80	38	12,5	73	101	64	6	1,5
	2,1	111,2	80	47	12,5	78	118	65	5	2,1
60	1,5	105,1	85	40	13,5	80	111	70	5	1,5
	2,1	120,6	85	50	13,5	84	128	70	5	2,1
65	1,5	115,9	98	43	14,5	90	121	80	5	1,5
70	2	124,5	105	46	16,75	96	129	85	5	2
75	2	133,9	110	50	17,75	102	139	90	6	2
80	2	143,8	120	52	17,75	108	149	95	6	2
	3	165,1	120	65	17,75	113	176	96	6	2,5
90	2,1	160,8	130	58	19,75	120	168	106	7	2,1
	3	186,6	130	71	19,75	127	201	108	7	2,5
100	2,1	178,6	145	63	20,75	132	188	116	7	2,1
110	2,1	191,1	145	72	22	143	203	127	13	2,1
115	3	205,7	155	80	23	154	216	137	20	2,5
125	3	223,9	165	82	24	166	236	147	19	2,5
135	3	238,6	180	87	26	181	256	158	19	2,5
140	3	256,5	190	93	27,5	193	276	168	20	2,5

Spherical roller bearings



Matrix for bearing preselection ____ 676

1 Spherical roller bearings ____ 678

1.1 Bearing design ____ 678
1.2 Load carrying capacity ____ 685
1.3 Compensation of angular misalignments ____ 686
1.4 Lubrication ____ 686
1.5 Sealing ____ 687
1.6 Speeds ____ 688
1.7 Noise ____ 688
1.8 Temperature range ____ 688
1.9 Cages ____ 689

FAG

1.10 Internal clearance ____ *692*
1.11 Dimensions, tolerances ____ *693*
1.12 Suffixes ____ *695*
1.13 Structure of bearing designation ____ *696*
1.14 Dimensioning ____ *698*
1.15 Minimum load ____ *699*
1.16 Design of bearing arrangements ____ *699*
1.17 Mounting and dismounting ____ *705*
1.18 Legal notice regarding data freshness ____ *709*
1.19 Further information ____ *709*

Product tables ____ *710*

Spherical roller bearings with cylindrical or tapered bore ____ *710*
Spherical roller bearings, sealed ____ *768*
Spherical roller bearings with adapter sleeve ____ *774*
Spherical roller bearings with withdrawal sleeve ____ *792*
Spherical roller bearings for vibratory machinery with cylindrical or tapered bore ____ *812*
Spherical roller bearings for vibratory machinery with adapter sleeve ____ *816*
Spherical roller bearings for vibratory machinery with withdrawal sleeve ____ *818*



Matrix for bearing preselection

The matrix gives an overview of the types and design features.

It can be used to make a preliminary assessment of whether a bearing is fundamentally suitable for the envisaged application.

The additional information provided in the product chapter (see column "detailed information") and in the Technical principles must, however, be observed in addition to this overview in selection of the bearing.

Design features and suitability			Spherical roller bearings		
+++ extremely suitable ++ highly suitable + suitable (+) suitable with restrictions – not suitable/not applicable ✓ available			cylindrical or tapered bore	sealed	detailed information ➤ 678
Load carrying capacity	radial		+++	+++	➤685|1.2
	axial, one direction		++	++	➤685|1.2
	axial, both directions		++	++	➤685|1.2
	moments		–	–	
Compensation of angular misalignments	static		+++	+++	➤686|1.3
	dynamic		+	+	➤686|1.3
Bearing design	cylindrical bore		✓	✓	➤678|1.1
	tapered bore		✓	✓[4]	➤678|1.1
	separable		–	–	➤705|1.17
Lubrication	greased		–	✓	➤686|1.4
Sealing	open		✓	–	➤687|1.5
	non-contact		–	–	
	contact		–	✓	➤687|1.5
Operating temperature in °C	from to		–30 +200[1]	–30 +180[2]	➤688|1.8
Suitability for	high speeds		+	(+)	➤688|1.6
	high running accuracy		+	+	➤693|1.11 ➤115
	low-noise running		(+)	+	➤27
	high rigidity		++	++	➤54
	reduced friction		+	+	➤56
	length compensation within bearing		–	–	
	non-locating bearing arrangement		+	+	➤141
	locating bearing arrangement		++	++	➤141
X-life bearings		X-life	✓	✓	➤684
Bearing bore[3] d in mm	from to		20 1800	25 620	➤710
Product tables	from page ➤		710	768	

1) Data valid for bearings with brass or sheet steel cages

2) Valid only for bearing series 240, 241. Series 222, 223: –40 °C to +100 °C

3) For bearings with adapter sleeve or withdrawal sleeve: inside diameter of adapter or withdrawal sleeve

4) Available by agreement

5) Larger catalogue bearings GL 1

	Spherical roller bearings for vibratory machinery						
	with adapter sleeve	with withdrawal sleeve	cylindrical or tapered bore	with adapter sleeve	with withdrawal sleeve	detailed information ➤ 678	
	+++	+++	+++	+++	+++	➤ 685 | 1.2	F_r
	++	++	++	++	++	➤ 685 | 1.2	F_a
	++	++	++	++	++	➤ 685 | 1.2	F_a
	–	–	–	–	–		M
	+++	+++	+++	+++	+++	➤ 686 | 1.3	
	+	+	+	+	+	➤ 686 | 1.3	
	✓	✓	✓	✓	✓	➤ 678 | 1.1	
	–	–	✓	–	–	➤ 678 | 1.1	
	–	–	–	–	–	➤ 705 | 1.17	
	–	–	–	–	–	➤ 686 | 1.4	
	✓	✓	✓	✓	✓	➤ 687 | 1.5	
	–	–	–	–	–		
	–	–	–	–	–		
	–30 +200[1)]	–30 +200[1)]	–30 +200[1)]	–30 +200[1)]	–30 +200[1)]	➤ 688 | 1.8	
	+	+	+	+	+	➤ 688 | 1.6	n
	(+)	(+)	(+)	(+)	(+)	➤ 693 | 1.11 ➤ 115	
	+	+	+	+	+	➤ 27	
	++	++	++	++	++	➤ 54	
	+	+	+	+	+	➤ 56	
	–	–	–	–	–		
	+	+	+	+	+	➤ 141	
	++	++	++	++	++	➤ 141	
	✓	✓	✓	✓	✓	➤ 684	X-life
	20 850[5)]	35 850[5)]	40 220	35 200	35 200	➤ 774	
	774	792	812	816	818		

1 Spherical roller bearings

Spherical roller bearings are suitable where:

- bearing arrangements are subjected to high and very high radial loads ➤*685*|*1.2*
- relatively high axial loads occur on one or both sides, in addition to high radial forces ➤*685*|*1.2*
- dynamic or static misalignments of the shaft relative to the housing, or deflections of the shaft, must be freely compensated by the bearing ➤*686*|*1.3*
- high shock type loads must be supported dynamically
- locating bearings with a very high load carrying capacity are required

For an overview of other product-specific features, see the Matrix for bearing preselection ➤*676*.

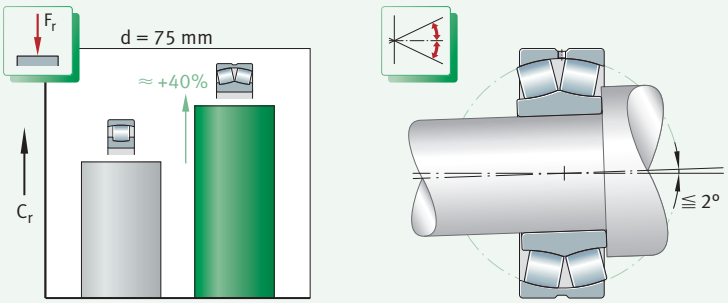

1 *Spherical roller bearing: comparison of load carrying capacity with barrel roller bearing of the same dimensions, compensation of misalignments*

F_r = *radial load*
C_r = *basic dynamic load rating*

1.1 Bearing design

✎ *Design variants*

The standard product range of spherical roller bearings comprises:

- bearings of the open design ➤*679*|*3*, ➤*680*|*4* and ➤*680*|*5*
- bearings with adapter sleeve or withdrawal sleeve ➤*684*|*7*
- sealed bearings ➤*683*|*6*
- bearings for vibratory machinery ➤*683*

The bearings are available in the majority of sizes as X-life designs with significantly higher performance ➤*684*. Larger catalogue bearings and other bearing designs GL 1.

Bearings of basic design

✎ *The outer ring has a curved raceway*

Spherical roller bearings are part of the group of radial roller bearings. These self-retaining rolling bearings have two rows of rollers with a mutually curved raceway in the outer ring and two raceways inclined relative to the bearing axis in the inner ring. This raceway design allows these bearings to combine a range of characteristics, which are essential to many applications, in one bearing, such as angular adjustability for example ➤*686*|*1.3*. The symmetrical barrel rollers are guided by brass, cast-iron, sheet steel or polyamide cages ➤*689*|*1.9*.

Roller contact design

The stress distribution at the contact points between the rollers and raceways is determined by the contact surface of the rollers. As a result, the roller geometry is matched to the raceway. This gives a favourable load distribution over the the entire length of the roller and prevents both edge stresses and stress peaks at the ends of the roller ➤679|2.

An increasing number of series and bearing sizes now contain rollers with additionally profiled ends, which offer the following advantages:

- effective protection against edge pressure (e.g. in the event of temporary overload)
- reduced tendency towards wear due to reduced energy input
- further increase in operating life

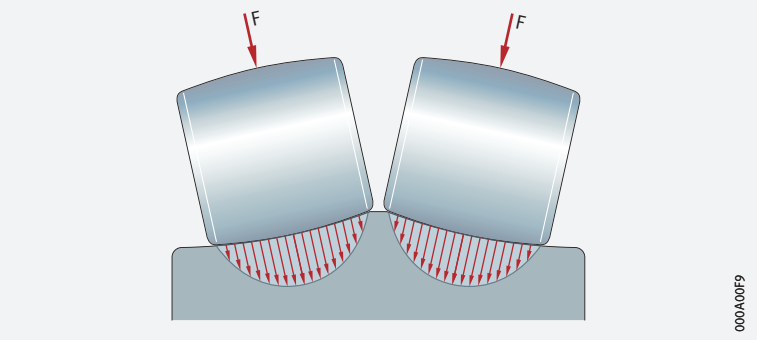

2 *Uniform load distribution due to optimised roller and raceway profile*

F = *load on the rollers*

The bore is cylindrical or tapered

Bearings of basic design are supplied without seals and with a cylindrical bore. With the exception of series 233..-E1A and 233..-BEA, these bearings are also available with a tapered bore ➤680|4.

DIN ISO

Bearings with a tapered bore have a bore taper of 1:12 and the suffix K, whereas spherical roller bearings of the series 249, 240 and 241 have a bore taper of 1:30 and the suffix K30 ➤695|1.12.

Distinguishing features of bearings in the basic design

In addition to the design of the bore (cylindrical or tapered), the specific bearing design is also dependent on the bearing series and bearing size. The key distinguishing features are the:

- design of the inner ring
  - bearings without a central rib on the inner ring ➤679|3, ➤680|4 and ➤681|1
  - bearings with a rigid central rib on the inner ring ➤679|3, ➤680|4 and ➤681|2
  - bearings with a loose central rib on the inner ring ➤680|5 and ➤682|3
- design of the cage ➤689|1.9

Bearings with a loose central rib on the inner ring

A loose central rib provides axial guidance of the rollers in the load-free zone ➤680|5 and ➤682|3. This reduces friction in the bearing, which in turn leads to lower operating temperatures.

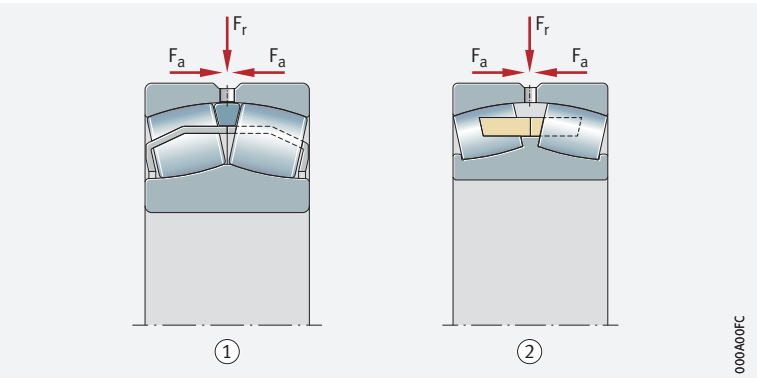

3 *Spherical roller bearings of basic design, cylindrical bore*

F_r = *radial load*
F_a = *axial load*

① *Spherical roller bearing without central rib on inner ring*
② *Spherical roller bearing with rigid central rib on inner ring*

4
Spherical roller bearings of basic design, tapered bore

F_r = *radial load*
F_a = *axial load*

① *Spherical roller bearing without central rib on inner ring*
② *Spherical roller bearing with rigid central rib on inner ring*

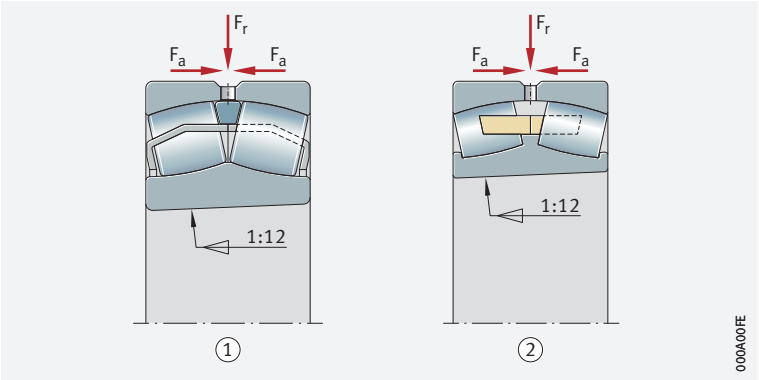

5
Spherical roller bearings of basic design, cylindrical or tapered bore, with loose central rib

F_r = *radial load*
F_a = *axial load*

① *Cylindrical bore*
② *Tapered bore*
③ *Loose central rib*

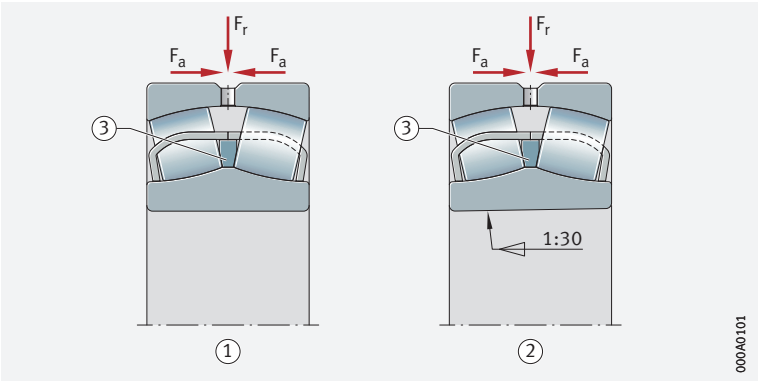

Basic bearing design variants

Bearings of basic design are available in the following variants:

- bearings without central rib on inner ring ➤*681*|▦ *1*
- bearings with rigid central rib on inner ring ➤*681*|▦ *2*
- bearings with loose central rib ➤*682*|▦ *3*

1
Bearing design for bearings without central rib on inner ring

Design			Suffix
①	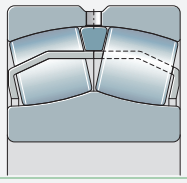	Two sheet steel cages, surface hardened or coated, guidance on outer ring, X-life	E1-XL
②	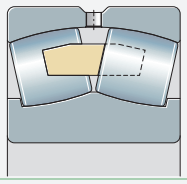	One brass double comb cage, guided by rollers, inner ring with two lateral retaining ribs, X-lifeX-life	E1A-XL-M
③	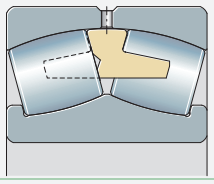	One brass double comb cage, guidance on outer ring, inner ring with two lateral retaining ribs, X-life	E1A-XL-MA1
④	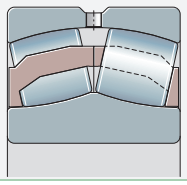	Two window cages made from glass fibre reinforced polyamide, guidance on inner ring, X-life	E1-XL-TVPB

2
Bearing design for bearings with rigid central rib on inner ring

Design			Suffix
①	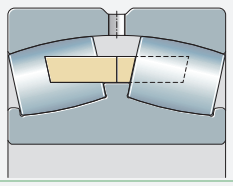	Two brass cages, guidance on inner ring, inner ring with two lateral retaining ribs and one central rib	MB B-MB
②	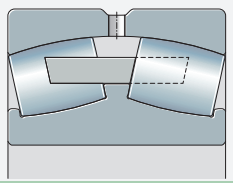	One cast-iron double comb cage, guidance on inner ring, inner ring with two lateral retaining ribs and one central rib	B-GB1



3
Bearing design for bearings with loose central rib

Design			Suffix
①	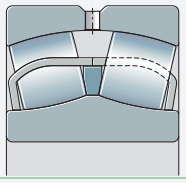	Two sheet steel cages, surface hardened, guidance on inner ring, X-lifeX-life	BE-XL
②	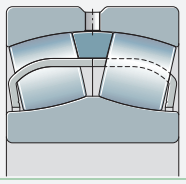	Two sheet steel cages, surface hardened, guidance on outer ring, X-life, vibrating screen design	BE-XL-JPA-T41A
③	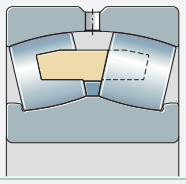	One brass double comb cage, guidance on inner ring, inner ring with two lateral retaining ribs, X-life	BEA-XL-MB1
④	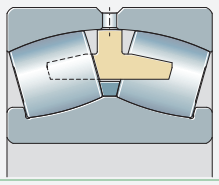	One brass double comb cage, guidance on outer ring, inner ring with two lateral retaining ribs, X-life	BEA-XL-MA1
⑤	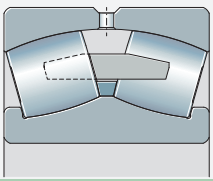	One cast-iron double comb cage, guidance on inner ring, inner ring with two lateral retaining ribs, X-life	BEA-XL-GB1

Sealed spherical roller bearings

A selection of standard bearings is also available with seals on both sides ➤*683*|*6* and ➤*687*|*1.5*.

✎ *Series 222, 223*

Sealed bearings of series 222 and 223 include an oversize width and the prefix WS in the designation.

✎ *Series 240, 241*

The main dimensions of sealed bearings of series 240 and 241 correspond to the main dimensions of open bearings.

Further information on sealed spherical roller bearings TPI 218.

6

Spherical roller bearings of basic design, sealed on both sides

① *Bearing with contact seal 2RSR (D < 160)*
② *Bearing with contact seal 2VSR (160 < D ≦ 320)*
③ *Bearing with contact seal 2RSR (320 < D ≦ 620)*

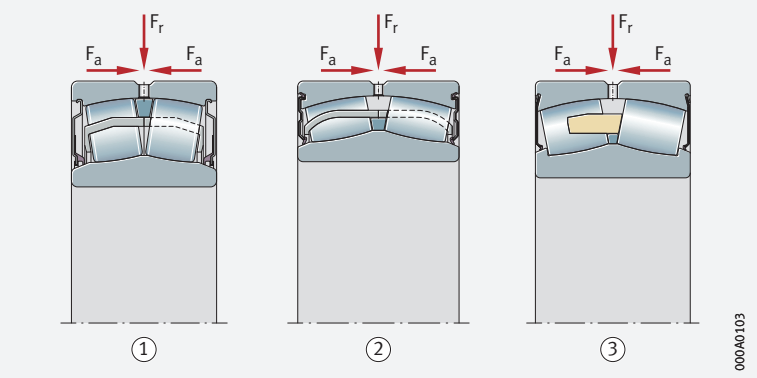

Spherical roller bearings for vibratory machinery

The rolling bearings fitted in vibratory machinery must support not only high loads and high speeds but also accelerations and centrifugal forces. In many cases, these applications involve adverse environmental conditions such as contamination and moisture.

✎ *Spherical roller bearings are matched to the operating conditions of vibratory machinery*

The special spherical roller bearings developed by Schaeffler are matched to the operating conditions in vibratory machinery and have proved highly successful in practical use. In particular, the cages of the rolling bearings are subjected to stresses arising from high radial accelerations. In unfavourable cases, these may be overlaid by axial accelerations as well.

✎ *The support of angular misalignments reduces additional sliding motions*

The rotating imbalance generates a rotating shaft deflection and additional sliding motion within the bearings. This increases the friction and therefore the operating temperature of the bearings. The special spherical roller bearings can support dynamic angular misalignments up to 0,15°.

✎ *Basic designs of special spherical roller bearings*

Schaeffler special spherical roller bearings for vibratory machinery have the main dimensions of dimension series 23 (DIN 616:2000, ISO 15:2017).

✎ *Specification T41A (T41D)*

Schaeffler spherical roller bearings for vibratory machinery are manufactured in accordance with the specification T41A or T41D ➤*694*|▦ *10*. This takes into consideration the particular requirements of the application. The specification defines, for example, the tolerances of the bore and outside diameter, as well as the radial internal clearance of the bearings. The other tolerances are in accordance with tolerance class Normal to ISO 492:2014.

Schaeffler spherical roller bearings for vibratory machinery are described in detail in TPI 197. This can be requested from Schaeffler.

Bearings with adapter sleeve or withdrawal sleeve

✎ Ready-to-fit mounting kits facilitate the ordering and mounting of bearings

Complete bearing mounting kits are also available for use in locating spherical roller bearings with a tapered bore onto a cylindrical shaft journal. These units comprise the bearing, adapter sleeve, tab washer and locknut, or bearing and withdrawal sleeve ➤*684*|*7*. Adapter sleeves and withdrawal sleeves allow bearings to be located on smooth and stepped shafts ➤*701*|*16* and ➤*701*|*17*. The fixing elements are described in the product tables and must also be stated when placing the order.

7
Spherical roller bearing with adapter sleeve

F_r = *radial load*
F_a = *axial load*

① *Spherical roller bearing with rigid central rib on inner ring, with adapter sleeve*
② *Adapter sleeve*
③ *Locknut*
④ *Tab washer*

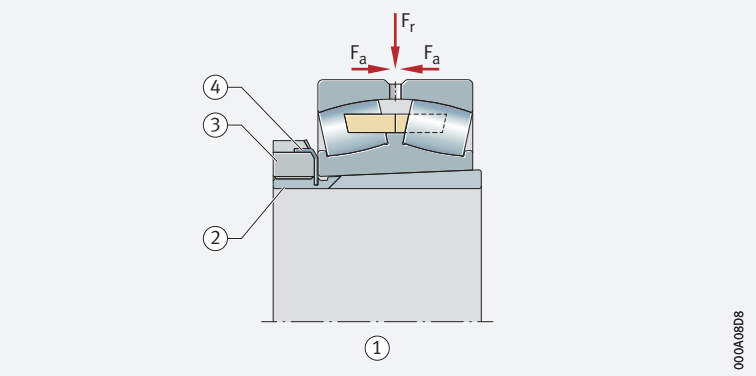

X-life premium quality

Spherical roller bearings are available in numerous series and dimensions as X-life bearings ➤*684*|*8*. These bearings exhibit considerably higher performance than conventional spherical roller bearings. This is achieved, for example, through the modified internal construction, higher surface quality of the contact areas, optimised contact geometry between rollers and raceways, new roller dimensions with crowned ends and the optimised cage design, as well as through the higher quality of the steel and rolling elements and a loose central rib ➤*682*|*3*.

8
Spherical roller bearing in X-life design

① *Cage*
② *Barrel roller*
③ *Outer ring*
④ *Inner ring*

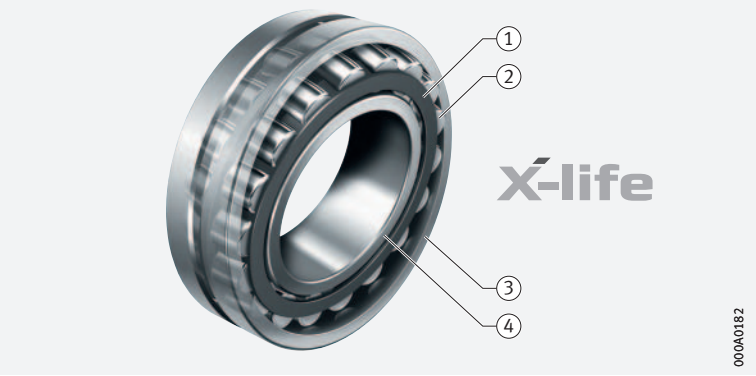

Advantages

Increased customer benefits due to X-life

These technical enhancements offer a range of advantages, such as:

- a more favourable load distribution in the bearing and thus a higher dynamic load carrying capacity of the bearings ➤679|2
- a higher running accuracy and smooth running
- running with reduced friction and greater energy efficiency
- lower heat generation in the bearing
- higher possible speeds
- lower lubricant consumption and therefore longer maintenance intervals if relubrication is carried out
- a measurably longer operating life of the bearings
- high operational security
- compact, environmentally-friendly bearing arrangements

Lower operating costs, higher machine availability

In conclusion, these advantages improve the overall cost-efficiency of the bearing position significantly and thus bring about a sustainable increase in the efficiency of the machine and equipment.

Suffix XL

X-life spherical roller bearings include the suffix XL in the designation ➤695|1.12 and ➤710|▦.

Areas of application

Suitable for a further area of application

Due to their special technical features, X-life spherical roller bearings are highly suitable for bearing arrangements in:

- dryer rolls and calenders
- mining machinery, conveyor belts, crushers, vibrating screens, vertical mills, roller presses
- continuous casting plant
- passenger elevators
- marine propulsion systems

X-life indicates a high product performance density and thus a particularly significant benefit to the customer. Further information on X-life ➤10.

1.2 Load carrying capacity

Suitable for very high radial loads and high axial loads

Spherical roller bearings can support high axial loads in both directions and very high radial loads. They are designed for very high load carrying capacity and, since they have the maximum possible number of large and particularly long barrel rollers (bearings in E1 design), are also suitable for the heaviest loads ➤678|1.1.

Axial load carrying capacity of bearings with adapter sleeve or withdrawal sleeve

Due to their internal construction, spherical roller bearings can support high axial loads. Where bearings with adapter sleeves or withdrawal sleeves are located on a smooth shaft without a fixed axial stop (e.g. rigid shoulder), the axial load carrying capacity of the bearing arrangement is dependent on the friction between the shaft and the sleeve.

If there is any doubt about the axial load carrying capacity of the location method, please consult Schaeffler.

Axial load and higher speeds

Friction in the bearing rises with increasing load and speed

Spherical roller bearings support high axial forces from both directions. However, if very high axial loads occur in combination with very high speeds, the resulting increase in friction and temperature in the bearing must be taken into consideration.

1.3 Compensation of angular misalignments

Spherical roller bearings compensate dynamic and static angular misalignments

Due to the concave outer ring raceway, spherical roller bearings are capable of angular adjustment ➤678| 1.1. As a result, they permit skewing between the outer and inner ring within certain limits, without causing damage to the bearings, and can thus compensate misalignments, shaft deflections and housing deformations.

Permissible adjustment angle

The possible skewing is dependent on the magnitude of the load

The permissible adjustment angle is stated for loads $P < 0{,}1 \cdot C_r$ ➤686| 4. The adjustment angles apply if:

- the angular deviation is constant (static angular misalignment)
- the rotating component is the inner ring

The extent to which the stated values can be used in practice is essentially dependent on the design of the bearing arrangement, sealing etc.

Reduced adjustment angle

If the rotating component is the outer ring, the inner ring undergoes tumbling motion or the adjustment angles are larger than stated in the table, the angular adjustment facility of the bearings is smaller. In such cases, please consult Schaeffler.

Permissible adjustment angle for sealed bearings

The permissible adjustment angle is smaller for sealed bearings

In sealed spherical roller bearings, the angular adjustment facility is 0,5° from the central position. The sealing function is not adversely affected by misalignments occurring up to this value.

4
Permissible adjustment angle of spherical roller bearings

Bearing series	Adjustment angle °
213..-E1, 222..-E1, 222..-BE(BEA), 230, 230..-E1(E1A), 230..-BE(BEA), 238, 239, 240	1,5
223..-E1, 223..-BE(BEA), 231, 231..-E1(E1A), 231..-BE(BEA), 232, 232..-E1(E1A), 232..-BE(BEA), 233..-E1A, 233..-BEA, 240..-BE(BEA), 241, 241..-BE(BEA)	2

1.4 Lubrication

The bearings can be lubricated via a circumferential groove and lubrication holes

In order to ensure good lubrication, most spherical roller bearings have a circumferential groove and three lubrication holes in the outer ring. The lubricant is pressed into the bearing via the groove and holes ➤687| 9. Due to the direct and symmetrical feed system, a uniform supply of lubricant to the rows of rollers is achieved. On both sides of the bearing, sufficiently large cavities for collection of the used grease or openings for the escape of grease must be provided.

Series 213

Bearings of series 213 with a bore diameter $d \leqq 35$ mm do not have a lubrication groove and lubrication hole.

Lubrication for ungreased bearings

Open spherical roller bearings are not greased. These bearings must be lubricated with oil or grease.

If shafts with a vertical axis are supported using spherical roller bearings, particular attention must be paid to ensuring the reliable provision of lubricant to the bearings.

Compatibility with plastic cages

When using bearings with plastic cages, compatibility between the lubricant and the cage material must be ensured if synthetic oils, lubricating greases with a synthetic oil base or lubricants containing a high proportion of EP additives are used.

Observe oil change intervals

Aged oil and additives in the oil can impair the operating life of plastics at high temperatures. As a result, stipulated oil change intervals must be strictly observed.

Lubrication-specific suffixes

Suffixes

H40	without lubrication groove and lubrication holes
H40CA	6 lubrication holes in the outer ring
H40AB	6 lubrication holes in the inner ring
H40AC	6 lubrication holes and one lubrication groove in the inner ring
S	lubrication groove and lubrication holes in the outer ring
SY	3 lubrication holes in the outer ring, no lubrication groove

9
Lubrication of the bearing via a lubrication groove and lubrication holes in the outer ring

① *Lubrication groove with lubrication holes*
② *Cavity for collecting grease*

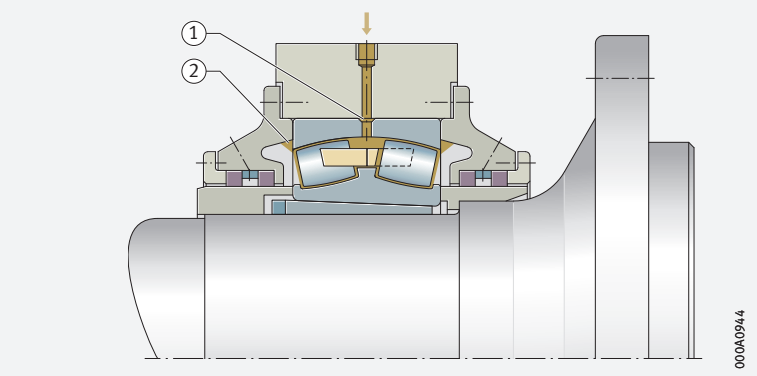

Sealed bearings

Greased bearings are normally maintenance-free

Sealed bearings are supplied already filled with a high quality lithium soap grease with a mineral oil base and are maintenance-free for most applications. Whether or not a bearing requires relubrication during its operating life is dependent on the operating conditions (e.g. on the operating temperatures and operating speeds). Where bearings cannot be relubricated, the grease operating life must be observed.

1.5 Sealing

Certain bearings are also available with seals

Sealed spherical roller bearings have sealing shields on both sides, which protect the bearing reliably against contamination. In order to ensure optimum sealing integrity, various sealing concepts are used, which are determined by size. The bearings should not be heated above +80 °C or washed out prior to mounting.

Series 240, 241

The seal material used is FKM

For spherical roller bearings of series 240 and 241, the standard seal material is fluoro elastomer.

Seals made from fluoro elastomer, such as Viton (FKM, FPM) for example, comprise particularly high performance materials which, when heated above approx. +300 °C, may release vapours and gases that are harmful to health if they are inhaled or come into contact with the eyes. Contact with seals which have been heated to such high temperatures is still dangerous even after cooling. Contact with skin must be avoided in all cases. A doctor must be consulted immediately if such vapours are inhaled. In all cases, the user is responsible for the safe handling of the seals during the operating life, as well as for scrapping the seals and disposing of them correctly.

Such temperatures may occur, for example, if a welding torch is used in the dismantling of a bearing. In these cases, the currently valid safety data sheet must be observed.

1.6 Speeds

✎ *Speeds in the product tables*

The product tables generally give two speeds for the bearings:

- the kinematic limiting speed n_G
- the thermal speed rating $n_{\vartheta r}$

Limiting speeds

The limiting speed n_G is the kinematically permissible speed of the bearing. Even under favourable mounting and operating conditions, this value should not be exceeded without prior consultation with Schaeffler ➤*64*.

Reference speeds

✎ *$n_{\vartheta r}$ is used to calculate n_ϑ*

The thermal speed rating $n_{\vartheta r}$ is not an application-oriented speed limit, but is a calculated ancillary value for determining the thermally safe operating speed n_ϑ ➤*64*.

✎ *Bearings with contact seals*

For bearings with contact seals, no reference speeds are defined in accordance with DIN ISO 15312:2004. As a result, only the limiting speed n_G is given in the product tables for these bearings.

1.7 Noise

Schaeffler Noise Index

The Schaeffler Noise Index (SGI) is not yet available for this bearing type ➤*69*. The data for these bearing series will be introduced and updated in stages.

Further information:

- ***medias*** *https://medias.schaeffler.com*

1.8 Temperature range

✎ *Limiting values*

The operating temperature of the bearings is limited by:

- the dimensional stability of the bearing rings and rolling elements
- the cage
- the lubricant
- the seals

Possible operating temperatures of spherical roller bearings ➤*688* | ▦ *5*.

▦ *5*
Permissible temperature ranges

Operating temperature	Open spherical roller bearings		Sealed spherical roller bearings	
	with brass, cast-iron or sheet steel cage	with polyamide cage PA66	Series 222, 223	Series 240, 241
	–30 °C to +200 °C	–30 °C to +120 °C	–30 °C to +100 °C, for short periods up to +120 °C, limited by the lubricant and seal material	–30 °C to +180 °C, for short periods up to +200 °C, limited by the lubricant and seal material

In the event of anticipated temperatures which lie outside the stated values, please contact Schaeffler.

1.9 Cages

✎ *Solid brass cages are used as standard*

Standard cages for spherical roller bearings ➤*681*|▦*1*, ➤*681*|▦*2*, ➤*682*|▦*3*, ➤*690*|▦*6*. Other cage designs are available by agreement. With such cages, however, suitability for high speeds and temperatures as well as the basic load ratings may differ from the values for the bearings with standard cages. Essential information on cages ➤*111*.

Cages in design B and in bearings without a suffix

✎ *Solid brass cage or sheet metal cage*

Spherical roller bearings with a rigid central rib on the inner ring (design B or bearings without a suffix) have a solid brass cage. Bearings without a cage suffix have sheet metal cages ➤*681*|▦*2* and ➤*690*|▦*6*.

Cages in bearings with the suffix MB/MB1, MA/MA1

✎ *Solid brass cage*

Bearings with the suffix MB or MB1 have solid brass cages, which are guided on the inner ring. In bearings with the suffix MA or MA1, the solid brass cages are guided on the outer ring ➤*681*|▦*2*, ➤*682*|▦*3* and ➤*690*|▦*6*.

Bearings with the suffix M

✎ *Solid brass cage*

Bearings with the suffix M have a roller-guided solid brass cage ➤*681*|▦*1* and ➤*690*|▦*6*.

Bearings with the suffix E1/BE

✎ *Sheet steel cage, solid brass cage or solid cage made from polyamide PA66*

Bearings with the suffix E1 and BE and without a cage suffix have sheet steel cages. The two cage halves are retained by a guiding ring or loose central rib in the outer or inner ring ➤*681*|▦*1* and ➤*690*|▦*6*. The other bearings of E1 design have solid cages made from glass fibre reinforced polyamide PA66 or solid brass cages (suffix TVPB or M). The sheet steel cages are surface hardened or coated and, as a result, are particularly well protected against wear.



Bearings with the suffix GB1

Bearings with the suffix GB1 have solid cast-iron cages, which are guided on the inner ring.

▦6
Cage, cage suffix, bore code

Bearing series	Sheet steel cage				Plastic cage		Table
	Guidance on						
	inner ring –		outer ring –		inner ring TVPB		
	Bore code						
	from	to	from	to	from	to	
213..-E1-XL	–		08	18	04	07	➤*681*|▦ *1*
					19	22	
222..-E1-XL	–		05	36	–		➤*681*|▦ *1*
222..-BE-XL	38	48	–		–		➤*682*|▦ *3*
222..-BEA-XL	–		–		–		–
223..-E1-XL	–		08	30	–		➤*681*|▦ *1*
223..-BE-XL	32	44	–		–		➤*682*|▦ *3*
223..-BE..-XL-JPA	–		32	44	–		➤*682*|▦ *3*
223..-BEA-XL	–		–		–		–
230..-E1-XL	–		–		22	40	➤*681*|▦ *1*
230..-E1A-XL	–		–		–		–
230..-BE-XL	44	60	–		–		➤*682*|▦ *3*
230..-BEA-XL	–		–		–		–
230	–		–		–		–
231..-E1-XL	–		–		20	38	➤*681*|▦ *1*
231..-E1A-XL	–		–		–		–
231..-BE-XL	40	56	–		–		➤*682*|▦ *3*
231..-BEA-XL	–		–		–		–
231	–		–		–		–
232..-E1-XL	–		–		18	36	➤*681*|▦ *1*
232..-E1A-XL	–		–		–		–
232..-BE-XL	38	48	–		–		➤*682*|▦ *3*
232..-BEA-XL	–		–		–		–
232	–		–		–		–
233..-E1A-XL	–		–		–		–
233..-BEA-XL	–		–		–		–
238	–		–		–		–
239	–		–		–		–
240..-BE-XL	24	60	–		–		➤*682*|▦ *3*
240..-BEA-XL	–		–		–		–
240	–		–		–		–
241..-BE-XL	22	88	–		–		➤*682*|▦ *3*
241..-BEA-XL	–		–		–		➤*682*|▦ *3*
241	–		–		–		➤*681*|▦ *2*
248	–		–		–		–
249	–		–		–		–

continued ▼

6
Cage, cage suffix, bore code

Bearing series	Brass cage								Table
	Guid-ance by rollers		Guidance on						
			inner ring				outer ring		
	M		MB1		MB		MA1		
	Bore code								
	from	to	from	to	from	to	from	to	
213..-E1-XL	–		–		–		–		–
222..-E1-XL	–		–		–		–		–
222..-BE-XL	–		–		–		–		–
222..-BEA-XL	–		52	72	–		–		➤682 | 3
223..-E1-XL	–		–		–		–		–
223..-BE-XL	–		–		–		–		–
223..-BE..-XL-JPA	–		–		–		–		–
223..-BEA-XL	–		48	80	–		–		➤682 | 3
230..-E1-XL	–		–		–		–		–
230..-E1A-XL	22	40	–		–		–		➤681 | 1
230..-BE-XL	–		–		–		–		–
230..-BEA-XL	–		64	/950	–		–		➤682 | 3
230	–		–		/1000	/1250	–		➤681 | 2
231..-E1-XL	–		–		–		–		–
231..-E1A-XL	20	38	–		–		–		➤681 | 1
231..-BE-XL	–		–		–		–		–
231..-BEA-XL	–		60	/900	–		–		➤682 | 3
231	–		–		/950	/1000	–		➤681 | 2
232..-E1-XL	–		–		–		–		–
232..-E1A-XL	18	36	–		–		–		➤681 | 1
232..-BE-XL	–		–		–		–		–
232..-BEA-XL	–		52	/900	–		–		➤682 | 3
232	–		–		–		–		➤681 | 2
233..-E1A-XL	–		–		–		22	30	➤681 | 1
233..-BEA-XL	–		–		–		32	44	➤682 | 3
238	–		–		/600	/1180	/630		➤681 | 2
239	–		–		36	/1180	–		➤681 | 2
240..-BE-XL	–		–		–		–		–
240..-BEA-XL	–		64	/1120	–		–		➤682 | 3
240	–		–		–		–		➤681 | 2
241..-BE-XL	–		–		–		–		–
241..-BEA-XL	–		92	/670	/710	/1000	–		–
241	–		–		–		–		–
248	–		–		92	/1800	–		➤681 | 2
249	–		–		/670	/1320	–		➤681 | 2
continued ▲	–		–		–		–		

For high continuous temperatures and applications with difficult operating conditions, bearings with brass or sheet steel cages should be used. If there is any uncertainty regarding cage suitability, please consult Schaeffler.

1.10 Internal clearance

Radial internal clearance

✎ *The standard is CN*

Spherical roller bearings with cylindrical and tapered bore are manufactured as standard with radial internal clearance CN (normal) ➤*692*|▦*7* and ➤*693*|▦*8*.

A number of bearings are also available by agreement with the smaller internal clearance C2 and with the larger internal clearance C3 and C4 ➤*692*|▦*7* and ➤*693*|▦*8*.

Spherical roller bearings with cylindrical bore

The values for radial internal clearance correspond to DIN 620-4:2004 (ISO 5753-1:2009) ➤*692*|▦*7*. They are valid for bearings which are free from load and measurement forces (without elastic deformation).

▦*7*
Radial internal clearance of spherical roller bearings with cylindrical bore

Nominal bore diameter d mm		Radial internal clearance							
		C2 (Group 2) µm		CN (Group N) µm		C3 (Group 3) µm		C4 (Group 4) µm	
over	incl.	min.	max.	min.	max.	min.	max.	min.	max.
18	24	10	20	20	35	35	45	45	60
24	30	15	25	25	40	40	55	55	75
30	40	15	30	30	45	45	60	60	80
40	50	20	35	35	55	55	75	75	100
50	65	20	40	40	65	65	90	90	120
65	80	30	50	50	80	80	110	110	145
80	100	35	60	60	100	100	135	135	180
100	120	40	75	75	120	120	160	160	210
120	140	50	95	95	145	145	190	190	240
140	160	60	110	110	170	170	220	220	280
160	180	65	120	120	180	180	240	240	310
180	200	70	130	130	200	200	260	260	340
200	225	80	140	140	220	220	290	290	380
225	250	90	150	150	240	240	320	320	420
250	280	100	170	170	260	260	350	350	460
280	315	110	190	190	280	280	370	370	500
315	355	120	200	200	310	310	410	410	550
355	400	130	220	220	340	340	450	450	600
400	450	140	240	240	370	370	500	500	660
450	500	140	260	260	410	410	550	550	720
500	560	150	280	280	440	440	600	600	780
560	630	170	310	310	480	480	650	650	850
630	710	190	350	350	530	530	700	700	920
710	800	210	390	390	580	580	770	770	1 010
800	900	230	430	430	650	650	860	860	1 120
900	1000	260	480	480	710	710	930	930	1220
1000	1120	290	530	530	770	770	1050	1050	1430
1120	1250	320	580	580	840	840	1140	1140	1560
1250	1400	350	630	630	910	910	1240	1240	1700
1400	1600	380	700	700	1020	1020	1390	1390	1890
1600	1800	420	780	780	1140	1140	1550	1550	2090

Spherical roller bearings with tapered bore

The values for radial internal clearance correspond to DIN 620-4:2004 (ISO 5753-1:2009) ➤693|⊞8. These are valid for bearings which are free from load and measurement forces (without elastic deformation).

⊞8 *Radial internal clearance of spherical roller bearings with tapered bore*

Nominal bore diameter d mm		Radial internal clearance							
		C2 (Group 2) µm		CN (Group N) µm		C3 (Group 3) µm		C4 (Group 4) µm	
over	incl.	min.	max.	min.	max.	min.	max.	min.	max.
18	24	15	25	25	35	35	45	45	60
24	30	20	30	30	40	40	55	55	75
30	40	25	35	35	50	50	65	65	85
40	50	30	45	45	60	60	80	80	100
50	65	40	55	55	75	75	95	95	120
65	80	50	70	70	95	95	120	120	150
80	100	55	80	80	110	110	140	140	180
100	120	65	100	100	135	135	170	170	220
120	140	80	120	120	160	160	200	200	260
140	160	90	130	130	180	180	230	230	300
160	180	100	140	140	200	200	260	260	340
180	200	110	160	160	220	220	290	290	370
200	225	120	180	180	250	250	320	320	410
225	250	140	200	200	270	270	350	350	450
250	280	150	220	220	300	300	390	390	490
280	315	170	240	240	330	330	430	430	540
315	355	190	270	270	360	360	470	470	590
355	400	210	300	300	400	400	520	520	650
400	450	230	330	330	440	440	570	570	720
450	500	260	370	370	490	490	630	630	790
500	560	290	410	410	540	540	680	680	870
560	630	320	460	460	600	600	760	760	980
630	710	350	510	510	670	670	850	850	1 090
710	800	390	570	570	750	750	960	960	1 220
800	900	440	640	640	840	840	1 070	1 070	1 370
900	1000	490	710	710	930	930	1190	1190	1520
1000	1120	540	780	780	1020	1020	1300	1300	1650
1120	1250	600	860	860	1120	1120	1420	1420	1800
1250	1400	660	940	940	1220	1220	1550	1550	1960
1400	1600	740	1060	1060	1380	1380	1750	1750	2 200
1600	1800	820	1180	1180	1540	1540	1950	1950	2 500



1.11 Dimensions, tolerances

Dimension standards

The main dimensions of spherical roller bearings correspond to DIN 635-2:2009, DIN 616:2000 and ISO 15:2017.

✎ *Width tolerances for bearings with the suffixes BE and BEA*

For spherical roller bearings with the suffixes BE and BEA, the width tolerances are reduced by half compared to the standard values. Values ➤694|⊞9. The running accuracy corresponds to tolerance class 5.

9
Width tolerances for spherical roller bearings with the suffixes BE and BEA

Tolerance symbols in accordance with ISO 492 ➤117|6
U = *upper limit deviation*
L = *lower limit deviation*

Nominal bore diameter d mm		Width deviation $t_{\Delta Bs}$ µm	
over	incl.	U	L
18	30	0	−60
30	50	0	−60
50	80	0	−75
80	120	0	−100
120	180	0	−125
180	250	0	−150
250	315	0	−175
315	400	0	−200
400	500	0	−225
500	630	0	−250
630	800	0	−375
800	1000	0	−500

Specification T41A and T41D

✎ The tolerances for d and D are restricted

Spherical roller bearings to specification T41A and T41D have restricted tolerances for the inside and outside diameter ➤*694|10*. In bearings with a tapered bore, the reduced tolerance range applies to the outside diameter only.

10
Restricted diameter tolerances for the inner and outer ring in bearings to specification T41A and T41D

Tolerance symbols in accordance with ISO 492 ➤117|6
U = *upper limit deviation*
L = *lower limit deviation*

Inner ring				Outer ring			
Nominal bore diameter d mm		Bore deviation $t_{\Delta dmp}$ µm		Nominal outer ring diameter D mm		Outside diameter deviation $t_{\Delta Dmp}$ µm	
over	incl.	U	L	over	incl.	U	L
30	50	0	−7	80	150	−5	−13
50	80	0	−9	150	180	−5	−18
80	120	0	−12	180	315	−10	−23
120	180	0	−15	315	400	−13	−28
180	250	0	−18	400	500	−13	−30
250	315	0	−21	500	630	−15	−35

Chamfer dimensions

The limiting dimensions for chamfer dimensions correspond to DIN 620-6:2004. Overview and limiting values ➤*137|7.11*. Nominal value of chamfer dimension ➤*710|*.

Tolerances

The tolerances for the dimensional and running accuracy of spherical roller bearings correspond to tolerance class Normal in accordance with ISO 492:2014. Tolerance values ➤*124|8*. The tolerance values for tapered bores with a taper angle 1:12 correspond to ISO 492 ➤*134|23*; the tolerance values for tapered bores with a taper angle 1:30 correspond to ➤*134|24*. The running tolerances for spherical roller bearings with the suffixes BE and BEA correspond to tolerance class 5. Tolerance values in accordance with ISO 492 ➤*128|14*.

For bearing arrangements with higher requirements for dimensional and running accuracy, spherical roller bearings are available with the tolerance class 5 to ISO 492:2014. In such cases, please consult Schaeffler.

1.12 Suffixes

Suffixes describe the design and features of a bearing in more detail.

11 *Suffixes and corresponding descriptions*

Suffix	Description of suffix	
A-MA, AS-MA	Two brass cages, guidance on outer ring, inner ring with two lateral retaining ribs and one central rib	Standard combinations
B-GB1	One cast-iron cage, guidance on inner ring, inner ring with two lateral retaining ribs and one central rib	
BE-XL	Two sheet steel cages, surface hardened, guidance on inner ring, X-life	
BE-XL-JPA	Two sheet steel cages, surface hardened, guidance on outer ring, X-life	
BEA-XL-MB1	One brass double comb cage, guidance on inner ring, inner ring with two lateral retaining ribs, X-life	
BEA-XL-MA1	One brass double comb cage, guidance on outer ring, inner ring with two lateral retaining ribs, X-life	
BEA-XL-GB1	One cast-iron double comb cage, guidance on inner ring, inner ring with two lateral retaining ribs, X-life	
E1-XL	Two sheet steel cages, surface hardened or coated, guidance on outer ring, X-life	
E1-XL-TVPB	Two window cages made from glass fibre reinforced polyamide, guidance on inner ring, X-life	
E1A-XL-M	One brass double comb cage, guided by rollers, inner ring with two lateral retaining ribs, X-life	
E1A-XL-MA1	One brass double comb cage, guidance on outer ring, inner ring with two lateral retaining ribs, X-life	
MB, B-MB	Two brass cages, guidance on inner ring, inner ring with two lateral retaining ribs and one central rib	
MA1	One brass cage, guidance on outer ring, inner ring with two lateral retaining ribs and one central rib	
2RSR	Contact seal (lip seal) on both sides with sheet steel reinforcement, made from nitrile rubber (NBR); grease fill level 25% to 40%, filled with high pressure grease	Standard
2VSR	Contact seal (lip seal) on both sides with sheet steel reinforcement, made from fluoro rubber (FKM); grease fill level 60% to 100%, filled with high temperature grease	

continued ▼



11 *Suffixes and corresponding descriptions*

Suffix	Description of suffix	
C2	Radial internal clearance C2 (smaller than normal)	Available by agreement
C3	Radial internal clearance C3 (larger than normal)	
C4	Radial internal clearance C4 (larger than C3)	
H40	Without lubrication groove and lubrication holes	
H40CA	6 lubrication holes in the outer ring	
H40AB	6 lubrication holes in the inner ring	
H40AC	6 lubrication holes and one lubrication groove in the inner ring	
H78(*)	3 uniformly distributed threaded holes in one end face of the outer ring (* weight-oriented module letter, please contact us)	
H151	One 45° retaining slot in the outer ring	
H151B	One 15° retaining slot in the outer ring	
K	Tapered bore, taper 1:12	
K30	Tapered bore, taper 1:30	
P5	Dimensional and running accuracy in accordance with ISO tolerance class 5	
S	Lubrication groove and lubrication holes in outer ring	
SY	3 lubrication holes in the outer ring, no lubrication groove	
T41A	For oscillating load with restricted diameter tolerances, radial internal clearance C4	
T41D	For oscillating load with restricted diameter tolerances, radial internal clearance C4, bore with thin chromium coating	
W209B	Inner ring made from case hardening steel	
XL	X-life bearing	

continued ▲

1.13 Structure of bearing designation

With ***medias*** interchange, equivalent Schaeffler bearing designations can be determined for bearing designations from other rolling bearing manufacturers *https://www.schaeffler.de/std/1B69*.

✎ *Examples of composition of bearing designation*

The designation of bearings follows a set model. Examples ➤*696*|*10* to ➤*697*|*13*. The composition of designations is subject to DIN 623-1 ➤*102*|*10*.

10 *Spherical roller bearing with cylindrical bore, without central rib on inner ring: designation structure*

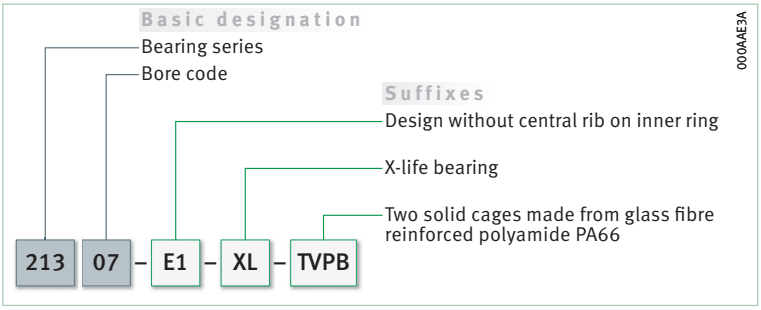

11
Spherical roller bearing for vibratory machinery, with cylindrical bore, without central rib on inner ring, to specification T41A: designation structure

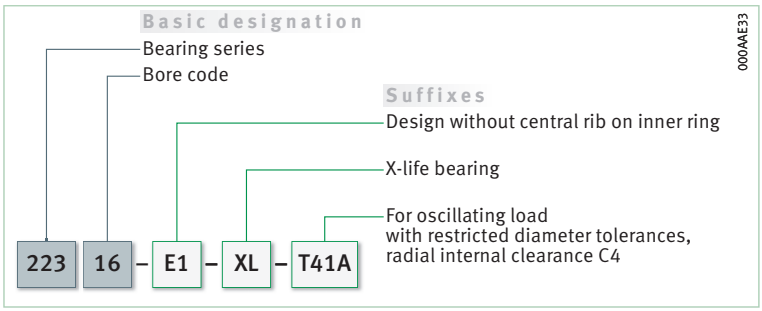

12
Spherical roller bearing with tapered bore, rigid central rib on inner ring: designation structure

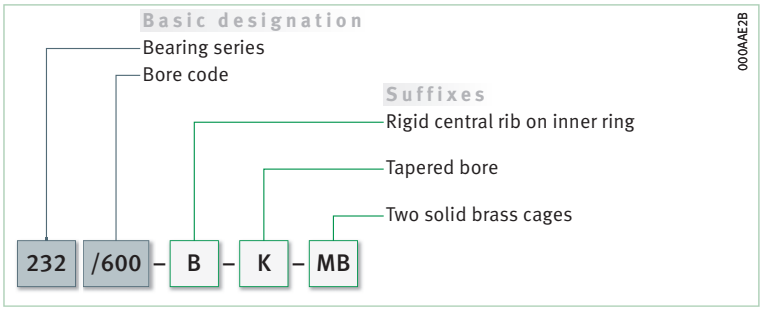

13
Spherical roller bearing with tapered bore and adapter sleeve, without central rib on inner ring: designation structure

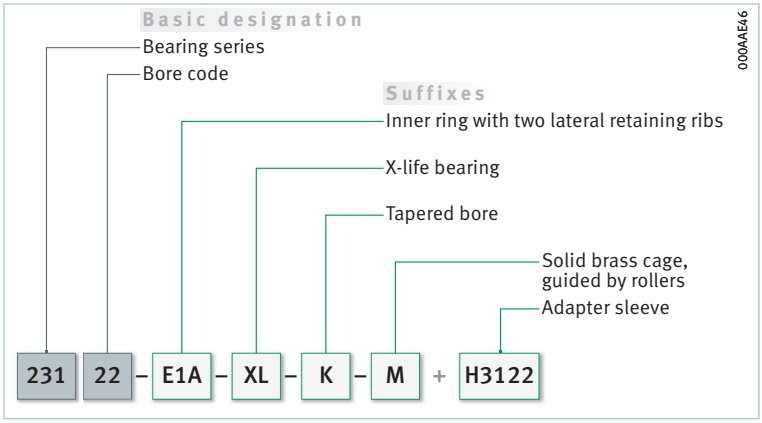

1.14 Dimensioning

Equivalent dynamic bearing load

✎ *P = a substitute force for combined load and various load cases*

The basic rating life equation $L = (C/P)^p$ used in the dimensioning of bearings under dynamic load assumes a load of constant magnitude and direction. In radial bearings, this is a purely radial load. If this condition is not met, an equivalent dynamic bearing load P must be determined for the rating life calculation. In the case of radial bearings, this is a radial load of constant magnitude and direction, which has the same effect on the rating life as the load occurring in practice.

✎ $F_a/F_r \leqq e$ *or* $F_a/F_r > e$

The calculation of P is dependent on the load ratio F_a/F_r and the calculation factor e.

Equivalent dynamic load **1**

$$\frac{F_a}{F_r} \leqq e \quad \Rightarrow \quad P = F_r + Y_1 \cdot F_a$$

Equivalent dynamic load **2**

$$\frac{F_a}{F_r} > e \quad \Rightarrow \quad P = 0{,}67 \cdot F_r + Y_2 \cdot F_a$$

Legend

P	N	Equivalent dynamic bearing load
F_r	N	Radial load
F_a	N	Axial load
e, Y_1, Y_2	–	Factors ➤*710*|▦.

Equivalent static bearing load

For spherical roller bearings subjected to static load ➤*698*\| 1 *3*.

Equivalent static load **3**

$$P_0 = F_{0r} + Y_0 \cdot F_{0a}$$

Legend

P_0	N	Equivalent static bearing load
F_{0r}, F_{0a}	N	Largest radial or axial static bearing load present (maximum load)
Y_0	–	Factor ➤*710*|▦.

Static load safety factor

✎ $S_0 = C_0/P_0$

In addition to the basic rating life L (L_{10h}, L_{hmr}), it is also always necessary to check the static load safety factor S_0 ➤*698*\| 1 *4*.

Static load safety factor **4**

$$S_0 = \frac{C_0}{P_0}$$

Legend

S_0	–	Static load safety factor
C_0	N	Basic static load rating
P_0	N	Equivalent static bearing load.

Axial load carrying capacity of bearings with adapter sleeve

Where bearings with adapter sleeves are located on a smooth shaft without a fixed axial stop (e.g. rigid shoulder), their axial load carrying capacity is dependent on the friction between the shaft and the sleeve ➤*685*\| *1.2*.

If there is any doubt about the axial load carrying capacity of the location method, please consult Schaeffler.

1.15 Minimum load

In continuous operation, a minimum load of $P = C_{0r}/100$ is required

In order that no slippage occurs between the contact partners, the spherical roller bearings must be constantly subjected to a sufficiently high radial load. Based on experience, a minimum radial load of the order of $P = C_{0r}/100$ is thus necessary for continuous operation.

If the minimum radial load is lower than indicated above, please consult Schaeffler.

1.16 Design of bearing arrangements

Support bearing rings over their entire circumference and width

In order to allow full utilisation of the load carrying capacity of the bearings and thus also achieve the requisite rating life, the bearing rings must be rigidly and uniformly supported by means of contact surfaces over their entire circumference and over the entire width of the raceway. Support can be provided by means of a cylindrical or tapered seating surface. The accuracy of mating parts must meet specific requirements ➤*702*|▦ *12*, ➤*702*|▦ *13*, ➤*703*|▦ *14*.

Radial location – bearings with cylindrical bore

For secure radial location, tight fits are necessary

In addition to supporting the rings adequately, the bearings must also be securely located in a radial direction, to prevent creep of the bearing rings on the mating parts under load. This is generally achieved by means of tight fits between the bearing rings and the mating parts. If the rings are not secured adequately or correctly, this can cause severe damage to the bearings and adjacent machine parts. Influencing factors, such as the conditions of rotation, magnitude of the load, internal clearance, temperature conditions, design of the mating parts and the mounting and dismounting options must be taken into consideration in the selection of fits.

If shock type loads occur, tight fits (transition fit or interference fit) are required to prevent the rings from coming loose at any point. Clearance, transition or interference fits ➤*152*|▦ *6* and ➤*160*|▦ *7*.

The following information provided in Technical principles must be taken into consideration in the design of bearing arrangements:

- criteria for selection of fits ➤*146*
- conditions of rotation ➤*147*
- tolerance classes for cylindrical shaft seats (radial bearings) ➤*149*|▦ *2*
- shaft fits ➤*152*|▦ *6*
- tolerance classes for bearing seats in housings (radial bearings) ➤*150*|▦ *4*
- housing fits ➤*160*|▦ *7*
- shaft tolerances for adapter sleeves and withdrawal sleeves ➤*168*|▦ *8*

Axial location – bearings with cylindrical bore

The bearings must also be securely located in an axial direction

As a tight fit alone is not normally sufficient to also locate the bearing rings securely on the shaft or in the housing bore in an axial direction, this must usually be achieved by means of an additional axial location or retention method. The axial location of the bearing rings must be matched to the type of bearing arrangement. Shaft and housing shoulders, housing covers, nuts, spacer rings and retaining rings etc., are fundamentally suitable ➤*700*|◯ *14*.

14
Location of a spherical roller bearing in a rotary kiln – example

① *Spherical roller bearing 24164-BE-XL*
② *Felt ring seals*
③ *Labyrinths with relubrication facility*
④ *End cap*
⑤ *Oil feed ducts*
⑥ *Oil grooves*
⑦ *Flake graphite cast iron housing*

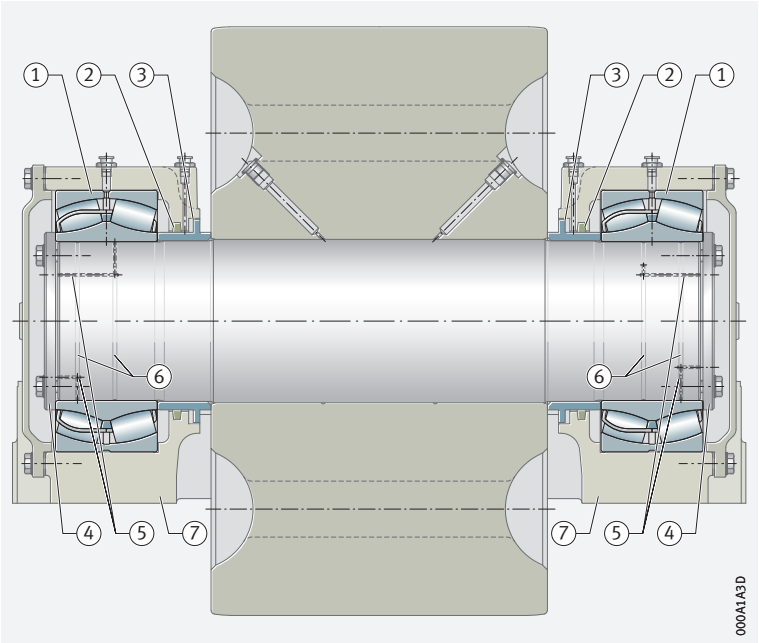

Axial location – bearings with tapered bore

✎ Location by means of locknut and tab washer

If a bearing with a tapered bore is mounted directly on a tapered shaft journal, the bearing can be axially located with ease using a locknut and tab washer ➤*700|15*.

15
Spherical roller bearing with tapered bore, mounted directly on the tapered shaft journal

① *Tapered journal with fixing thread*
② *Locknut*
③ *Tab washer*

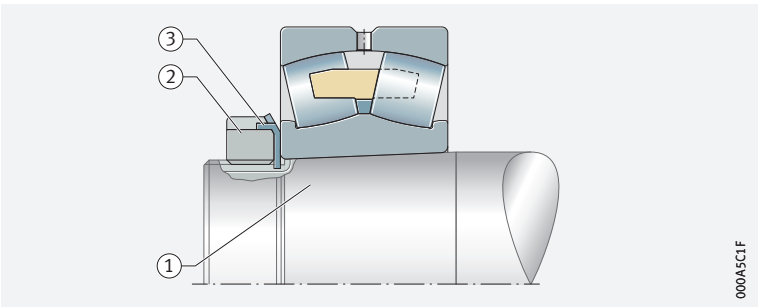

Location of bearings by means of adapter sleeve or withdrawal sleeve

✎ Mounting can be carried out quickly and reliably by means of wrench sets from Schaeffler

The location of spherical roller bearings by means of adapter sleeve or withdrawal sleeve on a smooth or stepped cylindrical shaft is an easy-to-fit and operationally reliable method ➤*678|1.1* ➤*701|16*. The adapter sleeve requires no additional means of retention on the shaft. The bearings can be positioned at any point on smooth shafts.

Further information:

- Axial load carrying capacity of bearing arrangements ➤*685|1.2*
- Adapter sleeves ➤*1680*

✎ Mounting of the adapter sleeve and withdrawal sleeve

While the bearing is being slid onto the adapter sleeve, the withdrawal sleeve is pressed into the tapered bearing bore until the required reduction in radial internal clearance is achieved. The position is fixed by means of a locknut. In the case of withdrawal sleeves, the inner ring is abutted against a shoulder on the shaft ➤*701|16*. The required adapter sleeves or withdrawal sleeves must be stated additionally in the order ➤*678|1.1* ➤*774|▦*.

16
Location of spherical roller bearings by means of adapter sleeve or withdrawal sleeve

① *Bearing with adapter sleeve, adapter sleeve nut (shaft nut) and tab washer*
② *Bearing with withdrawal sleeve, locknut and tab washer, abutment of the inner ring against a shaft shoulder*

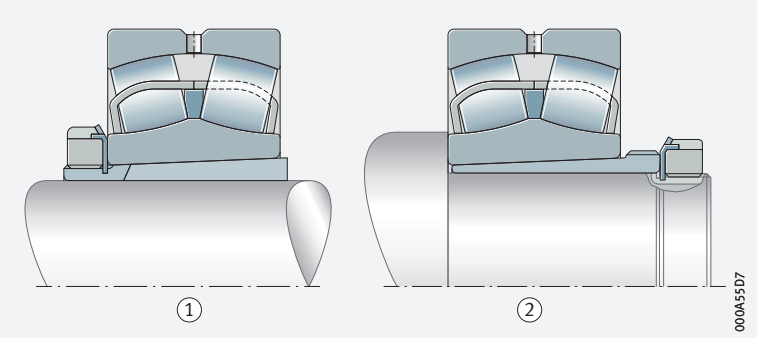

Location by means of adapter sleeve, axial abutment by means of a support ring

If an adapter sleeve connection is used and it is expected that the frictional forces of the sleeve cannot reliably support high axial forces, the bearing inner ring can be abutted by means of a support ring against a shaft shoulder ➤*701*| 16. Axial guidance forces in the opposing direction are supported by means of force locking. The mounting dimensions of the support ring in the product tables must be observed ➤*774*|.

17
Location of a spherical roller bearing by means of adapter sleeve and support ring on a stepped shaft

① *Spherical roller bearing*
② *Adapter sleeve*
③ *Support ring*
④ *Locknut with tab washer*

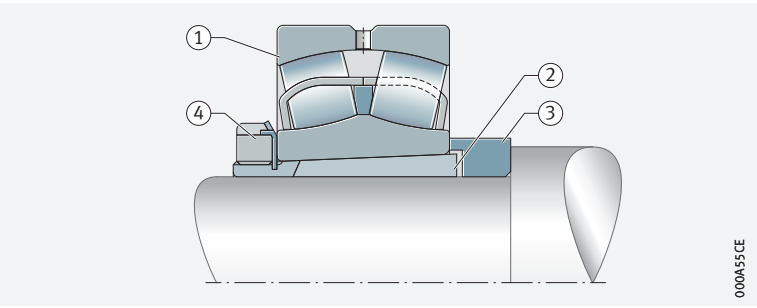

Location of bearings with a tapered bore on a tapered shaft

✎*Axial location by means of fixing nut, ring nut and locking pin*

Where shafts must support high torques, it is not always permissible to cut the thread for the fixing nut of the bearing into the shaft due to the notch effect. In this case, a slot with well rounded transitions is grooved into the shaft. A split ring with an external thread is inserted in the slot and secured by means of a feather key or pin. The fixing nut is screwed onto the ring nut and secured ➤*701*| 18.

18
Location of a spherical roller bearing on a tapered shaft

① *Spherical roller bearing*
② *Fixing nut with retaining bracket*
③ *Retaining pin*
④ *Ring nut*

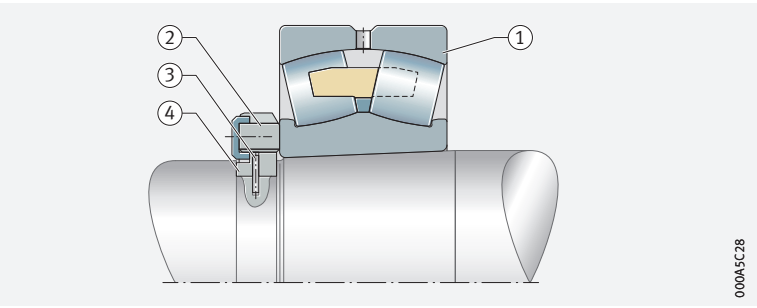

Dimensional, geometrical and running accuracy of cylindrical bearing seats

✎A minimum of IT6 should be provided for the shaft seat and a minimum of IT7 for the housing seat

The accuracy of the cylindrical bearing seat on the shaft and in the housing should correspond to the accuracy of the bearing used. For spherical roller bearings with the tolerance class Normal, the shaft seat should correspond to a minimum of standard tolerance grade IT6 and the housing seat to a minimum of IT7. Guide values for the geometrical and positional tolerances of bearing seating surfaces ➤*702*| ▦ *12*, tolerances t_1 to t_3 in accordance with ➤*170*| ⧉ *11*. Numerical values for IT grades ➤*702*| ▦ *13*.

▦ 12
Guide values for the geometrical and positional tolerances of bearing seating surfaces

Bearing tolerance class		Bearing seating surface	Standard tolerance grades to ISO 286-1 (IT grades)			
to ISO 492	to DIN 620		Diameter tolerance	Roundness tolerance t_1	Parallelism tolerance t_2	Total axial runout tolerance of abutment shoulder t_3
Normal	PN (P0)	Shaft	IT6 (IT5)	Circumferential load IT4/2	Circumferential load IT4/2	IT4
				Point load IT5/2	Point load IT5/2	
		Housing	IT7 (IT6)	Circumferential load IT5/2	Circumferential load IT5/2	IT5
				Point load IT6/2	Point load IT6/2	
5	P5	Shaft	IT5	Circumferential load IT2/2	Circumferential load IT2/2	IT2
				Point load IT3/2	Point load IT3/2	
		Housing	IT6	Circumferential load IT3/2	Circumferential load IT3/2	IT3
				Point load IT4/2	Point load IT4/2	

▦ 13
Numerical values for ISO standard tolerances (IT grades) to ISO 286-1:2010

IT grade	Nominal dimension in mm							
	over	**18**	**30**	**50**	**80**	**120**	**180**	**250**	**315**
	incl.	**30**	**50**	**80**	**120**	**180**	**250**	**315**	**400**
	Values in µm								
IT2	2,5		2,5	3	4	5	7	8	9
IT3	4		4	5	6	8	10	12	13
IT4	6		7	8	10	12	14	16	18
IT5	9		11	13	15	18	20	23	25
IT6	13		16	19	22	25	29	32	36
IT7	21		25	30	35	40	46	52	57

continued ▼

13
Numerical values for ISO standard tolerances (IT grades) to ISO 286-1:2010

IT grade	Nominal dimension in mm						
	over **400**	**500**	**630**	**800**	**1 000**	**1 250**	**1 600**
	incl. **500**	**630**	**800**	**1 000**	**1 250**	**1 600**	**2 000**
	Values in µm						
IT2	10	11	13	15	18	21	25
IT3	15	16	18	21	24	29	35
IT4	20	22	25	28	33	39	46
IT5	27	32	36	40	47	55	65
IT6	40	44	50	56	66	78	92
IT7	63	70	80	90	105	125	150

continued ▲

Roughness of cylindrical bearing seating surfaces

✎ Ra must not be too high

The roughness of the bearing seats must be matched to the tolerance class of the bearings. The mean roughness value Ra must not be too high, in order to maintain the interference loss within limits. The shafts must be ground, while the bores must be precision turned. Guide values as a function of the IT grade of bearing seating surfaces ➤*703*|▦ *14*.

14
Roughness values for cylindrical bearing seating surfaces – guide values

Nominal diameter of the bearing seat d (D) mm		Recommended mean roughness value for ground bearing seats Ramax µm			
		Diameter tolerance (IT grade)			
over	incl.	IT7	IT6	IT5	IT4
–	80	1,6	0,8	0,4	0,2
80	500	1,6	1,6	0,8	0,4
500	1 250	3,2[1)]	1,6	1,6	0,8

[1)] *For the mounting of bearings using the hydraulic method, a value Ra = 1,6 µm must not be exceeded*

Tolerances for tapered bearing seats

✎ Specifications for tapered bearing seats

For bearings located directly on a tapered shaft journal, the data are in accordance with ➤*173*|▭ *12*.



Mounting dimensions for the contact surfaces of bearing rings

✎ The contact surfaces for the rings must be of sufficient height

The mounting dimensions of the shaft and housing shoulders, and spacer rings etc., must ensure that the contact surfaces for the bearing rings are of sufficient height. However, they must also reliably prevent rotating parts of the bearing from grazing stationary parts. Proven mounting dimensions for the radii and diameters of the abutment shoulders are given in the product tables. These dimensions are limiting dimensions (maximum or minimum dimensions); the actual values should not be higher or lower than specified.

Suitable bearing housings for spherical roller bearings

✎ A large range of housings is available

For economical, operationally reliable and easily interchangeable bearing arrangement units, the spherical roller bearings can also be combined with Schaeffler bearing housings ➤ *704* | *19*. These easy-to-fit units fulfil all of the requirements for modern machine and plant designs with favourable maintenance-related characteristics.

Due to the large number of application areas, an extensive range of bearing housings is available for bearings with cylindrical and tapered bores. These include split and unsplit plummer block housings, take-up housings, flanged housings and housings for specific industrial and railway applications. Detailed information on bearing housings can be found in publication GK 1 *https://www.schaeffler.de/std/1D54*. This book can be ordered from Schaeffler.

19
Split plummer block housing SNS with a spherical roller bearing

① *Split plummer block housing SNS*
② *Spherical roller bearing*

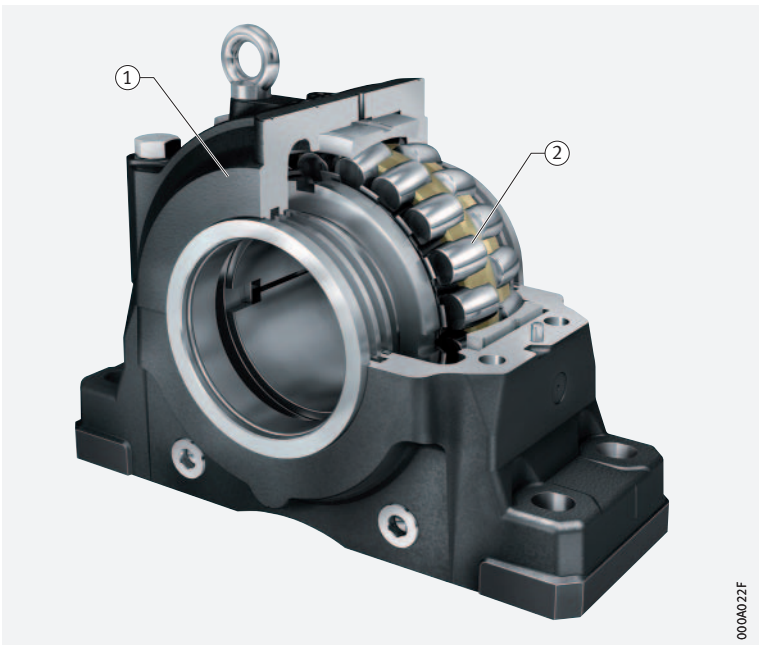

1.17 Mounting and dismounting

The mounting and dismounting options for spherical roller bearings, by thermal, hydraulic or mechanical methods, must also be taken into consideration in the design of the bearing position.
Example ➤ 705 | 20.

20
Mounting of large bearings with a hydraulic nut

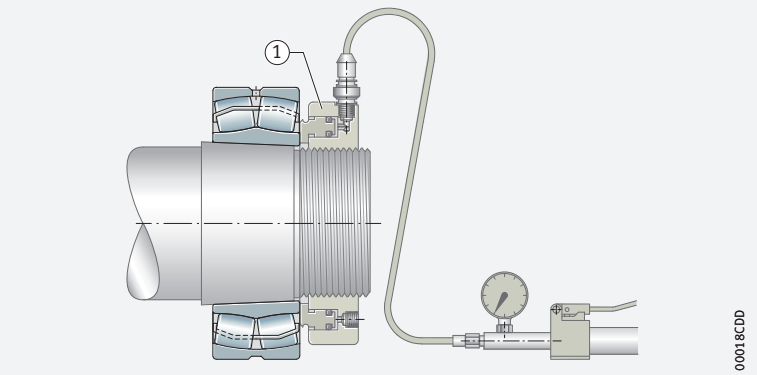

① *Spherical roller bearing with tapered bore mounted directly on the tapered shaft journal*
② *Hydraulic nut*

Ensure that the bearings are not damaged during mounting

Spherical roller bearings are not separable. In the mounting of non-separable bearings, the mounting forces must always be applied to the bearing ring with a tight fit.

Mounting of bearings with a tapered bore

Suitable methods

Bearings with a tapered bore are mounted with a tight fit on the shaft or adapter and withdrawal sleeve. The measurement of the reduction in radial internal clearance or of the axial drive-up distance of the inner ring on the tapered bearing seat serves as an indication of the tight fit.

Measuring the reduction in radial internal clearance during mounting of the bearings

The measurement is usually carried out with a feeler gauge

The reduction in radial internal clearance is the difference between the radial internal clearance before mounting and the bearing clearance after mounting of the bearing ➤*706*|*21*, ➤*707*|*15* and ➤*708*|*16*. The radial internal clearance must be measured first. During pressing on, the radial clearance (bearing clearance) must be checked until the necessary reduction in the radial internal clearance and thus the required tight fit is achieved.

If the values in the table are observed, secure radial location of the bearings will be achieved, i. e. the inner ring will be prevented from creeping under load. However, the mounting method does not ensure that an operating clearance which is appropriate to the application is also achieved simultaneously. In order to select the requisite internal clearance class, other factors influencing the operating clearance, such as the temperature difference between the inner and outer ring and the housing bore tolerance for example, must be taken into consideration.

If there is any uncertainty regarding the selection of an internal clearance class for a specific application, please consult Schaeffler.

21
Reduction in radial internal clearance

s_a = *axial press-on distance (axial drive-up distance of the bearing)*
s_r = *radial internal clearance before mounting*
s_{r1} = *radial internal clearance after mounting*
$s_r - s_{r1}$ = *reduction in radial internal clearance*

① *Before mounting*
② *After mounting*

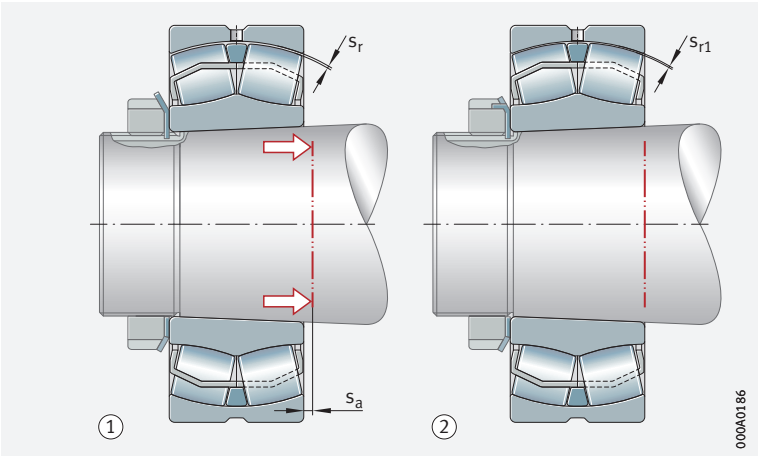

15
Reduction in radial internal clearance in mounting of spherical roller bearings with tapered bore

Nominal bore diameter d mm		Radial internal clearance before mounting in accordance with DIN 620-4:2004 (ISO 5753-1:2009)						Reduction in radial internal clearance during mounting[1] mm	
		CN (Group N) mm		C3 (Group 3) mm		C4 (Group 4) mm			
over	incl.	min.	max.	min.	max.	min.	max.	min.	max.
24	30	0,03	0,04	0,04	0,055	0,055	0,075	0,015	0,02
30	40	0,035	0,05	0,05	0,065	0,065	0,085	0,02	0,025
40	50	0,045	0,06	0,06	0,08	0,08	0,1	0,025	0,03
50	65	0,055	0,075	0,075	0,095	0,095	0,12	0,03	0,04
65	80	0,07	0,095	0,095	0,12	0,12	0,15	0,04	0,05
80	100	0,08	0,11	0,11	0,14	0,14	0,18	0,045	0,06
100	120	0,1	0,135	0,135	0,17	0,17	0,22	0,05	0,07
120	140	0,12	0,16	0,16	0,2	0,2	0,26	0,065	0,09
140	160	0,13	0,18	0,18	0,23	0,23	0,3	0,075	0,1
160	180	0,14	0,2	0,2	0,26	0,26	0,34	0,08	0,11
180	200	0,16	0,22	0,22	0,29	0,29	0,37	0,09	0,13
200	225	0,18	0,25	0,25	0,32	0,32	0,41	0,1	0,14
225	250	0,2	0,27	0,27	0,35	0,35	0,45	0,11	0,15
250	280	0,22	0,3	0,3	0,39	0,39	0,49	0,12	0,17
280	315	0,24	0,33	0,33	0,43	0,43	0,54	0,13	0,19
315	355	0,27	0,36	0,36	0,47	0,47	0,59	0,15	0,21
355	400	0,3	0,4	0,4	0,52	0,52	0,65	0,17	0,23
400	450	0,33	0,44	0,44	0,57	0,57	0,72	0,2	0,26
450	500	0,37	0,49	0,49	0,63	0,63	0,79	0,21	0,28
500	560	0,41	0,54	0,54	0,68	0,68	0,87	0,24	0,32
560	630	0,46	0,6	0,6	0,76	0,76	0,98	0,26	0,35
630	710	0,51	0,67	0,67	0,85	0,85	1,09	0,3	0,4
710	800	0,57	0,75	0,75	0,96	0,96	1,22	0,34	0,45
800	900	0,64	0,84	0,84	1,07	1,07	1,37	0,37	0,5
900	1 000	0,71	0,93	0,93	1,19	1,19	1,52	0,41	0,55
1 000	1 120	0,78	1,02	1,02	1,3	1,3	1,65	0,45	0,6
1 120	1 250	0,86	1,12	1,12	1,42	1,42	1,8	0,49	0,65
1 250	1 400	0,94	1,22	1,22	1,55	1,55	1,96	0,55	0,72

[1] *Valid only for solid steel shafts and hollow shafts with a bore no larger than half the shaft diameter. The following applies: bearings with a radial internal clearance before mounting in the upper half of the tolerance range are mounted using the larger value for the reduction in radial internal clearance, while bearings in the lower half of the tolerance range are mounted using the smaller value for the reduction in radial internal clearance.*



Measuring the axial drive-up distance of the inner ring

16 *Axial drive-up distance of the inner ring in spherical roller bearings with a tapered bore*

Nominal bore diameter		Drive-up distance on taper 1:12[1]				Drive-up distance on taper 1:30[1]				Minimum radial internal clearance required after mounting, control value		
d		Shaft		Sleeve		Shaft		Sleeve		With CN (Group N)	With C3 (Group 3)	With C4 (Group 4)
mm		mm		mm		mm		mm		mm	mm	mm
over	incl.	min.	max.	min.	max.	min.	max.	min.	max.	min.	min.	min.
24	30	0,3	0,35	0,3	0,4	–	–	–	–	0,015	0,02	0,035
30	40	0,35	0,4	0,35	0,45	–	–	–	–	0,015	0,025	0,04
40	50	0,4	0,45	0,45	0,5	–	–	–	–	0,02	0,03	0,05
50	65	0,45	0,6	0,5	0,7	–	–	–	–	0,025	0,035	0,055
65	80	0,6	0,75	0,7	0,85	–	–	–	–	0,025	0,04	0,07
80	100	0,7	0,9	0,75	1	1,7	2,2	1,8	2,4	0,035	0,05	0,08
100	120	0,7	1,1	0,8	1,2	1,9	2,7	2	2,8	0,05	0,065	0,1
120	140	1,1	1,4	1,2	1,5	2,7	3,5	2,8	3,6	0,055	0,08	0,11
140	160	1,2	1,6	1,3	1,7	3	4	3,1	4,2	0,055	0,09	0,13
160	180	1,3	1,7	1,4	1,9	3,2	4,2	3,3	4,6	0,06	0,1	0,15
180	200	1,4	2	1,5	2,2	3,5	4,5	3,6	5	0,07	0,1	0,16
200	225	1,6	2,2	1,7	2,4	4	5,5	4,2	5,7	0,08	0,12	0,18
225	250	1,7	2,4	1,8	2,6	4,2	6	4,6	6,2	0,09	0,13	0,2
250	280	1,9	2,6	2	2,9	4,7	6,7	4,8	6,9	0,1	0,14	0,22
280	315	2	3	2,2	3,2	5	7,5	5,2	7,7	0,11	0,15	0,24
315	355	2,4	3,4	2,6	3,6	6	8,2	6,2	8,4	0,12	0,17	0,26
355	400	2,6	3,6	2,9	3,9	6,5	9	6,8	9,2	0,13	0,19	0,29
400	450	3,1	4,1	3,4	4,4	7,7	10	8	10,4	0,13	0,2	0,31
450	500	3,3	4,4	3,6	4,8	8,2	11	8,4	11,2	0,16	0,23	0,35
500	560	3,7	5	4,1	5,4	9,2	12,5	9,6	12,8	0,17	0,25	0,36
560	630	4	5,4	4,4	5,9	10	13,5	10,4	14	0,2	0,29	0,41
630	710	4,6	6,2	5,1	6,8	11,5	15,5	12	16	0,21	0,31	0,45
710	800	5,3	7	5,8	7,6	13,3	17,5	13,6	18	0,23	0,35	0,51
800	900	5,7	7,8	6,3	8,5	14,3	19,5	14,8	20	0,27	0,39	0,57
900	1 000	6,3	8,5	7	9,4	15,8	21	16,4	22	0,3	0,43	0,64
1 000	1 120	6,8	9	7,6	10,2	17	23	18	24	0,32	0,48	0,7
1 120	1 250	7,4	9,8	8,3	11	18,5	25	19,6	26	0,34	0,54	0,77
1 250	1 400	8,3	10,8	9,3	12,1	21	27	22,2	28,3	0,36	0,59	0,84

[1] *Valid only for solid steel shafts and hollow shafts with a bore no larger than half the shaft diameter. The following applies: bearings with a radial internal clearance before mounting in the upper half of the tolerance range are mounted using the larger value for the axial drive-up distance, while bearings in the lower half of the tolerance range are mounted using the smaller value for the axial drive-up distance.*

Rolling bearings must be handled with great care

Schaeffler Mounting Handbook

Rolling bearings are well-proven precision machine elements for the design of economical and reliable bearing arrangements, which offer high operational security. In order that these products can function correctly and achieve the envisaged operating life without detrimental effect, they must be handled with care.

The Schaeffler Mounting Handbook MH 1 gives comprehensive information about the correct storage, mounting, dismounting and maintenance of rotary rolling bearings *https://www.schaeffler.de/std/1D53*. It also provides information which should be observed by the designer, in relation to the mounting, dismounting and maintenance of bearings, in the original design of the bearing position. This book is available from Schaeffler on request.

1.18 Legal notice regarding data freshness

✎ The further development of products may also result in technical changes to catalogue products

Of central interest to Schaeffler is the further development and optimisation of its products and the satisfaction of its customers. In order that you, as the customer, can keep yourself optimally informed about the progress that is being made here and with regard to the current technical status of the products, we publish any product changes which differ from the printed version in our electronic product catalogue.

§ We therefore reserve the right to make changes to the data and illustrations in this catalogue. This catalogue reflects the status at the time of printing. More recent publications released by us (as printed or digital media) will automatically precede this catalogue if they involve the same subject. Therefore, please always use our electronic product catalogue to check whether more up-to-date information or modification notices exist for your desired product.

Link to electronic product catalogue

The following link will take you to the Schaeffler electronic product catalogue: *https://medias.schaeffler.com*.

1.19 Further information

In addition to the data in this chapter, the following chapters in Technical principles must also be observed in the design of bearing arrangements:

- Determining the bearing size ➤*34*
- Rigidity ➤*54*
- Friction and increases in temperature ➤*56*
- Speeds ➤*64*
- Bearing data ➤*97*
- Lubrication ➤*70*
- Sealing ➤*185*
- Design of bearing arrangements ➤*141*
- Mounting and dismounting ➤*194*

Spherical roller bearings

With cylindrical or tapered bore

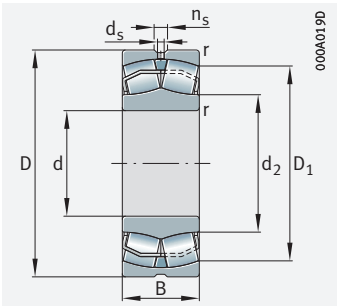

Cylindrical bore

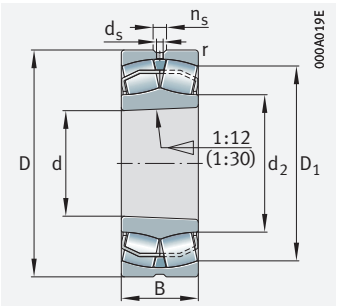

Tapered bore

d = 20 – 50 mm

Main dimensions			Basic load ratings		Fatigue limit load	Limiting speed	Speed rating	Mass	Designation
d	D	B	dyn. C_r	stat. C_{0r}	C_{ur}	n_G	$n_{\vartheta r}$	m	➤*695*|*1.12* ➤*696*|*1.13* X-life ➤*684*
			kN	kN	N	min^{-1}	min^{-1}	≈ kg	
20	52	15	41	33	3 800	16 000	9 700	0,16	**21304-E1-XL-TVPB**
25	52	18	48,5	42,5	4 900	14 400	9 200	0,191	**22205-E1-XL**
	52	18	48,5	42,5	4 900	14 400	9 200	0,175	**22205-E1-XL-K**
	62	17	52	43,5	4 900	13 900	8 400	0,254	**21305-E1-XL-TVPB**
30	62	20	64	57	7 000	12 500	7 800	0,275	**22206-E1-XL**
	62	20	64	57	7 000	12 500	7 800	0,275	**22206-E1-XL-K**
	72	19	72	63	7 200	12 000	7 300	0,386	**21306-E1-XL-TVPB**
35	72	23	89	81	9 700	10 700	7 000	0,434	**22207-E1-XL**
	72	23	89	81	9 700	10 700	7 000	0,434	**22207-E1-XL-K**
	80	21	83	74	8 300	10 900	6 800	0,496	**21307-E1-XL-K-TVPB**
	80	21	83	74	8 300	10 900	6 800	0,503	**21307-E1-XL-TVPB**
40	80	23	101	91	12 100	10 500	6 200	0,528	**22208-E1-XL**
	80	23	101	91	12 100	10 500	6 200	0,528	**22208-E1-XL-K**
	90	23	109	107	14 600	9 800	5 200	0,749	**21308-E1-XL**
	90	23	109	107	14 600	9 800	5 200	0,749	**21308-E1-XL-K**
	90	33	156	149	13 500	7 600	5 500	1,05	**22308-E1-XL**
	90	33	156	149	13 500	7 600	5 500	1	**22308-E1-XL-K**
45	85	23	104	99	13 000	10 100	5 600	0,589	**22209-E1-XL**
	85	23	104	99	13 000	10 100	5 600	0,577	**22209-E1-XL-K**
	100	25	129	130	17 700	9 000	4 750	0,999	**21309-E1-XL**
	100	25	129	130	17 700	9 000	4 750	0,999	**21309-E1-XL-K**
	100	36	187	183	16 500	6 800	5 000	1,39	**22309-E1-XL**
	100	36	187	183	16 500	6 800	5 000	1,4	**22309-E1-XL-K**
50	90	23	109	107	14 600	9 800	5 100	0,606	**22210-E1-XL**
	90	23	109	107	14 600	9 800	5 100	0,608	**22210-E1-XL-K**
	110	27	129	130	17 700	9 000	5 400	1,32	**21310-E1-XL**
	110	27	129	130	17 700	9 000	5 400	1,32	**21310-E1-XL-K**
	110	40	229	223	20 700	6 300	4 800	1,9	**22310-E1-XL**
	110	40	229	223	20 700	6 300	4 800	1,9	**22310-E1-XL-K**

medias *https://www.schaeffler.de/std/1F9A*

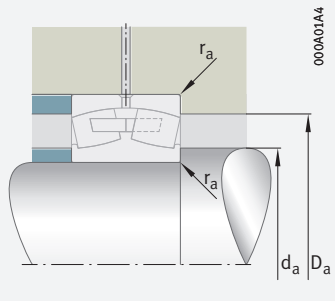

Mounting dimensions

Dimensions						Mounting dimensions			Calculation factors			
d	r min.	D_1 ≈	d_2 ≈	d_s	n_s	d_a min.	D_a max.	r_a max.	e	Y_1	Y_2	Y_0
20	1,1	43	28,9	–	–	27	45	1	0,3	2,25	3,34	2,2
25	1	44,4	31,5	3,2	4,8	30,6	46,4	1	0,33	2,07	3,09	2,03
	1	44,4	31,5	3,2	4,8	30,6	46,4	1	0,33	2,07	3,09	2,03
	1,1	51	35,2	–	–	32	55	1	0,28	2,43	3,61	2,37
30	1	53,7	38,1	3,2	4,8	35,6	56,4	1	0,3	2,26	3,37	2,21
	1	53,7	38,1	3,2	4,8	35,6	54,6	1	0,3	2,26	3,37	2,21
	1,1	59,9	41,5	–	–	37	65	1	0,27	2,49	3,71	2,43
35	1,1	62,5	43,9	3,2	4,8	42	65	1	0,31	2,21	3,29	2,16
	1,1	62,5	43,9	3,2	4,8	42	65	1	0,31	2,21	3,29	2,16
	1,5	66,6	47,4	–	–	44	71	1,5	0,26	2,55	3,8	2,5
	1,5	66,6	47,4	–	–	44	71	1,5	0,26	2,55	3,8	2,5
40	1,1	70,4	48,8	3,2	4,8	47	73	1	0,27	2,49	3,71	2,43
	1,1	70,4	48,8	3,2	4,8	47	73	1	0,27	2,49	3,71	2,43
	1,5	80,8	59,9	3,2	4,8	49	81	1,5	0,23	2,95	4,4	2,89
	1,5	80,8	59,9	3,2	4,8	49	81	1,5	0,23	2,95	4,4	2,89
	1,5	76	52,4	3,2	6,5	49	81	1,5	0,36	1,86	2,77	1,82
	1,5	76	52,4	3,2	6,5	49	81	1,5	0,36	1,86	2,77	1,82
45	1,1	75,6	55	3,2	4,8	52	78	1	0,25	2,74	4,08	2,68
	1,1	75,6	55	3,2	4,8	52	78	1	0,25	2,74	4,08	2,68
	1,5	89,8	67,6	3,2	4,8	54	91	1,5	0,21	3,17	4,72	3,1
	1,5	89,8	67,6	3,2	4,8	54	91	1,5	0,21	3,17	4,72	3,1
	1,5	84,7	58,9	3,2	6,5	54	91	1,5	0,36	1,9	2,83	1,86
	1,5	84,7	58,9	3,2	6,5	54	91	1,5	0,36	1,9	2,83	1,86
50	1,1	80,8	59,9	3,2	4,8	57	83	1	0,23	2,95	4,4	2,89
	1,1	80,8	59,9	3,2	4,8	57	83	1	0,23	2,95	4,4	2,89
	2	89,8	67,7	3,2	4,8	61	99	2	0,21	3,17	4,72	3,1
	2	89,8	67,7	3,2	4,8	61	99	2	0,21	3,17	4,72	3,1
	2	92,6	63	3,2	6,5	61	99	2	0,36	1,86	2,77	1,82
	2	92,6	63	3,2	6,5	61	99	2	0,36	1,86	2,77	1,82

Spherical roller bearings

With cylindrical or tapered bore

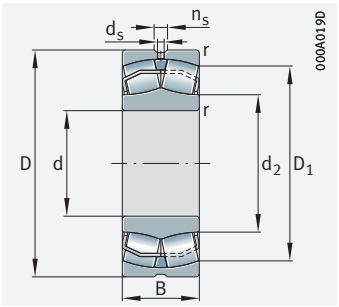

Cylindrical bore

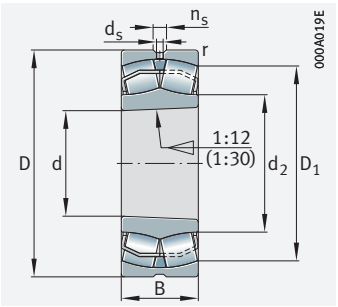

Tapered bore

d = 55 – 75 mm

Main dimensions			Basic load ratings		Fatigue limit load	Limiting speed	Speed rating	Mass	Designation
d	D	B	dyn. C_r	stat. C_{0r}	C_{ur}	n_G	$n_{\vartheta r}$	m	➤*695*|*1.12* ➤*696*|*1.13* X-life ➤*684*
			kN	kN	N	min^{-1}	min^{-1}	≈ kg	
55	100	25	129	130	17 700	9 000	4 650	0,822	**22211-E1-XL**
	100	25	129	130	17 700	9 000	4 650	0,825	**22211-E1-XL-K**
	120	29	160	155	20 700	8 100	5 100	1,28	**21311-E1-XL**
	120	29	160	155	20 700	8 100	5 100	1,28	**21311-E1-XL-K**
	120	43	265	260	24 600	5 800	4 500	2,27	**22311-E1-XL**
	120	43	265	260	24 600	5 800	4 500	2,2	**22311-E1-XL-K**
60	110	28	160	155	20 700	8 100	4 550	1,12	**22212-E1-XL**
	110	28	160	155	20 700	8 100	4 550	1,09	**22212-E1-XL-K**
	130	31	211	226	28 500	6 700	4 100	1,89	**21312-E1-XL**
	130	31	211	226	28 500	6 700	4 100	1,89	**21312-E1-XL-K**
	130	46	310	310	29 000	5 400	4 200	2,97	**22312-E1-XL**
	130	46	310	310	29 000	5 400	4 200	2,8	**22312-E1-XL-K**
65	120	31	202	210	26 500	7 000	4 200	1,55	**22213-E1-XL**
	120	31	202	210	26 500	7 000	4 200	1,52	**22213-E1-XL-K**
	140	33	250	270	34 500	6 200	3 600	2,13	**21313-E1-XL**
	140	33	250	270	34 500	6 200	3 600	2,13	**21313-E1-XL-K**
	140	48	350	365	33 500	5 000	3 800	3,57	**22313-E1-XL**
	140	48	350	365	33 500	5 000	3 800	3,5	**22313-E1-XL-K**
70	125	31	211	226	28 500	6 700	3 950	1,65	**22214-E1-XL**
	125	31	211	226	28 500	6 700	3 950	1,61	**22214-E1-XL-K**
	150	35	250	270	34 500	6 200	3 950	3,13	**21314-E1-XL**
	150	35	250	270	34 500	6 200	3 950	3,13	**21314-E1-XL-K**
	150	51	390	390	37 500	4 800	3 700	4,21	**22314-E1-XL**
	150	51	390	390	37 500	4 800	3 700	4,1	**22314-E1-XL-K**
75	130	31	216	237	30 500	6 500	3 700	1,72	**22215-E1-XL**
	130	31	216	237	30 500	6 500	3 700	1,68	**22215-E1-XL-K**
	160	37	305	325	39 000	5 700	3 750	3,79	**21315-E1-XL**
	160	37	305	325	39 000	5 700	3 750	3,74	**21315-E1-XL-K**
	160	55	445	450	41 500	4 500	3 550	5,38	**22315-E1-XL**
	160	55	445	450	42 000	4 500	3 550	5,3	**22315-E1-XL-K**

medias *https://www.schaeffler.de/std/1F9A*

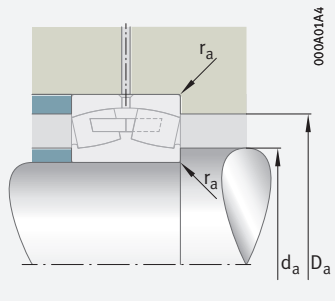

Mounting dimensions

Dimensions						Mounting dimensions			Calculation factors			
d	r min.	D_1 ≈	d_2 ≈	d_s	n_s	d_a min.	D_a max.	r_a max.	e	Y_1	Y_2	Y_0
55	1,5	89,8	67,6	3,2	4,8	64	91	1,5	0,21	3,17	4,72	3,1
	1,5	89,8	67,6	3,2	4,8	64	91	1,5	0,21	3,17	4,72	3,1
	2	98,3	71,6	3,2	6,5	66	109	2	0,23	2,98	4,44	2,92
	2	98,3	71,6	3,2	6,5	66	109	2	0,23	2,98	4,44	2,92
	2	101,4	68,9	3,2	6,5	66	109	2	0,36	1,89	2,81	1,84
	2	101,4	68,9	3,2	6,5	66	109	2	0,36	1,89	2,81	1,84
60	1,5	98,7	71,6	3,2	6,5	69	101	1,5	0,23	2,98	4,44	2,92
	1,5	98,7	71,6	3,2	6,5	69	101	1,5	0,23	2,98	4,44	2,92
	2,1	112,5	84,4	3,2	6,5	72	118	2,1	0,23	2,95	4,4	2,89
	2,1	112,5	84,4	3,2	6,5	72	118	2,1	0,23	2,95	4,4	2,89
	2,1	110,1	74,8	3,2	6,5	72	118	2,1	0,35	1,91	2,85	1,87
	2,1	110,1	74,8	3,2	6,5	72	118	2,1	0,35	1,91	2,85	1,87
65	1,5	107,3	79,1	3,2	6,5	74	111	1,5	0,24	2,81	4,19	2,75
	1,5	107,3	79,1	3,2	6,5	74	111	1,5	0,24	2,81	4,19	2,75
	2,1	126,8	94,9	3,2	6,5	77	128	2,1	0,22	3,14	4,67	3,07
	2,1	126,8	94,9	3,2	6,5	77	128	2,1	0,22	3,14	4,67	3,07
	2,1	119,3	83,2	4,8	9,5	77	128	2,1	0,34	2	2,98	1,96
	2,1	119,3	83,2	4,8	9,5	77	128	2,1	0,34	2	2,98	1,96
70	1,5	112,5	84,4	3,2	6,5	79	116	1,5	0,23	2,95	4,4	2,89
	1,5	112,5	84,4	3,2	6,5	79	116	1,5	0,23	2,95	4,4	2,89
	2,1	126,2	94,9	3,2	6,5	82	138	2,1	0,22	3,14	4,67	3,07
	2,1	126,2	94,9	3,2	6,5	82	138	2,1	0,22	3,14	4,67	3,07
	2,1	128	86,7	4,8	9,5	82	138	2,1	0,34	2	2,98	1,96
	2,1	128	86,7	4,8	9,5	82	138	2,1	0,34	2	2,98	1,96
75	1,5	117,7	89,8	3,2	6,5	84	121	1,5	0,22	3,1	4,62	3,03
	1,5	117,7	89,8	3,2	6,5	84	121	1,5	0,22	3,1	4,62	3,03
	2,1	135,2	99,7	3,2	6,5	87	148	2,1	0,22	3,04	4,53	2,97
	2,1	135,2	99,7	3,2	6,5	87	148	2,1	0,22	3,04	4,53	2,97
	2,1	136,3	92,4	4,8	9,5	87	148	2,1	0,34	1,99	2,96	1,94
	2,1	136,3	92,4	4,8	9,5	87	148	2,1	0,34	1,99	2,96	1,94

Spherical roller bearings

With cylindrical or tapered bore

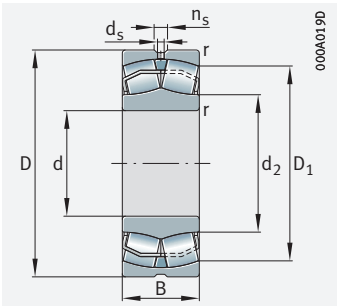

Cylindrical bore

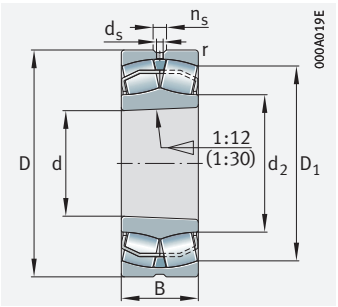

Tapered bore

d = 80 – 95 mm

Main dimensions			Basic load ratings		Fatigue limit load	Limiting speed	Speed rating	Mass	Designation
d	D	B	dyn. C_r	stat. C_{0r}	C_{ur}	n_G	$n_{\vartheta r}$	m	➤*695*|*1.12* ➤*696*|*1.13* X-life ➤*684*
			kN	kN	N	min^{-1}	min^{-1}	≈ kg	
80	140	33	250	270	34 500	6 200	3 550	2,1	**22216-E1-XL**
	140	33	250	270	34 500	6 200	3 550	2,08	**22216-E1-XL-K**
	170	39	305	325	39 000	5 700	4 050	4,54	**21316-E1-XL**
	170	39	305	325	39 000	5 700	4 050	4,54	**21316-E1-XL-K**
	170	58	495	510	46 500	4 250	3 400	6,27	**22316-E1-XL**
	170	58	495	510	46 500	4 250	3 400	6,1	**22316-E1-XL-K**
85	150	36	305	325	39 000	5 700	3 450	2,65	**22217-E1-XL**
	150	36	305	325	39 000	5 700	3 450	2,59	**22217-E1-XL-K**
	180	41	345	375	43 500	5 200	3 800	5,36	**21317-E1-XL**
	180	41	345	375	43 500	5 200	3 800	5,3	**21317-E1-XL-K**
	180	60	540	560	51 000	4 100	3 200	7,06	**22317-E1-XL**
	180	60	540	560	51 000	4 100	3 200	7,1	**22317-E1-XL-K**
90	160	40	345	375	43 500	5 200	3 400	3,42	**22218-E1-XL**
	160	40	345	375	43 500	5 200	3 400	3,35	**22218-E1-XL-K**
	160	52,4	445	520	50 000	4 250	2 650	4,1	**23218-E1-XL-K-TVPB**
	160	52,4	445	520	50 000	4 250	2 650	4,3	**23218-E1-XL-TVPB**
	160	52,4	445	520	50 000	4 250	2 650	4,3	**23218-E1A-XL-K-M**
	160	52,4	445	520	50 000	4 250	2 650	4,5	**23218-E1A-XL-M**
	190	43	380	415	48 500	4 850	3 600	6,26	**21318-E1-XL**
	190	43	380	415	48 500	4 850	3 600	6,26	**21318-E1-XL-K**
	190	64	610	630	56 000	3 850	3 000	8,69	**22318-E1-XL**
	190	64	610	630	56 000	3 850	3 000	8,5	**22318-E1-XL-K**
95	170	43	380	415	48 500	4 850	3 300	4,13	**22219-E1-XL**
	170	43	380	415	48 000	4 850	3 300	4,04	**22219-E1-XL-K**
	200	45	425	450	48 500	4 600	3 250	6,63	**21319-E1-XL-K-TVPB**
	200	45	425	450	48 500	4 600	3 250	6,81	**21319-E1-XL-TVPB**
	200	67	670	700	61 000	3 700	2 800	9,69	**22319-E1-XL**
	200	67	670	700	61 000	3 700	2 800	9,5	**22319-E1-XL-K**

medias *https://www.schaeffler.de/std/1F9A*

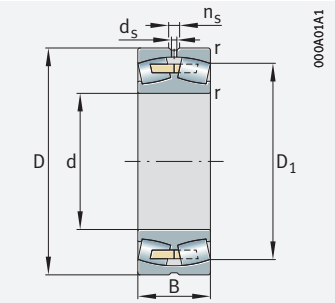

Solid cage, brass or steel; cylindrical bore

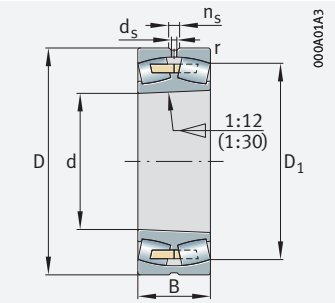

Solid cage, brass or steel; tapered bore

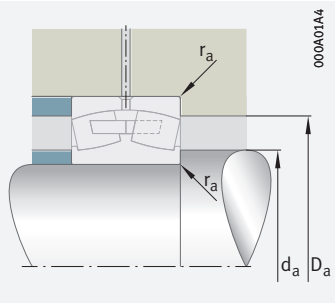

Mounting dimensions

Dimensions						Mounting dimensions			Calculation factors			
d	r min.	D_1 ≈	d_2 ≈	d_s	n_s	d_a min.	D_a max.	r_a max.	e	Y_1	Y_2	Y_0
80	2	126,8	94,9	3,2	6,5	91	129	2	0,22	3,14	4,67	3,07
	2	126,8	94,9	3,2	6,5	91	129	2	0,22	3,14	4,67	3,07
	2,1	135,4	99,7	3,2	6,5	92	158	2,1	0,22	3,04	4,53	2,97
	2,1	135,4	99,8	3,2	6,5	92	158	2,1	0,22	3,04	4,53	2,97
	2,1	145,1	98,3	4,8	9,5	92	158	2,1	0,34	1,99	2,96	1,94
	2,1	145,1	98,3	4,8	9,5	92	158	2,1	0,34	1,99	2,96	1,94
85	2	135,4	99,7	3,2	6,5	96	139	2	0,22	3,04	4,53	2,97
	2	135,4	99,7	3,2	6,5	96	139	2	0,22	3,04	4,53	2,97
	3	143,9	106,1	4,8	9,5	99	166	2,5	0,23	2,9	4,31	2,83
	3	143,9	106,1	4,8	9,5	99	166	2,5	0,23	2,9	4,31	2,83
	3	154,2	104,4	4,8	9,5	99	166	2,5	0,33	2,04	3,04	2
	3	154,2	104,4	4,8	9,5	99	166	2,5	0,33	2,04	3,04	2
90	2	143,9	106,1	3,2	6,5	101	149	2	0,23	2,9	4,31	2,83
	2	143,9	106,1	3,2	6,5	101	149	2	0,23	2,9	4,31	2,83
	2	140	104,1	3,2	6,5	101	149	2	0,31	2,2	3,27	2,15
	2	140	104,1	3,2	6,5	101	149	2	0,31	2,2	3,27	2,15
	2	140	–	3,2	6,5	101	149	2	0,31	2,2	3,27	2,15
	2	140	–	3,2	6,5	101	149	2	0,31	2,2	3,27	2,15
	3	152,7	112,6	4,8	9,5	104	176	2,5	0,24	2,87	4,27	2,8
	3	152,7	112,6	4,8	9,5	104	176	2,5	0,24	2,87	4,27	2,8
	3	162,5	110,2	6,3	12,2	104	176	2,5	0,33	2,03	3,02	1,98
	3	162,5	110,2	6,3	12,2	104	176	2,5	0,33	2,03	3,02	1,98
95	2,1	152,7	112,6	4,8	9,5	107	158	2,1	0,24	2,87	4,27	2,8
	2,1	152,7	112,6	4,8	9,5	107	158	2,1	0,24	2,87	4,27	2,8
	3	169,4	124,3	4,8	9,5	109	186	2,5	0,22	3,04	4,53	2,97
	3	169,4	124,3	4,8	9,5	109	186	2,5	0,22	3,04	4,53	2,97
	3	171,2	116	6,3	12,2	109	186	2,5	0,33	2,03	3,02	1,98
	3	171,2	116	6,3	12,2	109	186	2,5	0,33	2,03	3,02	1,98

Spherical roller bearings

With cylindrical or tapered bore

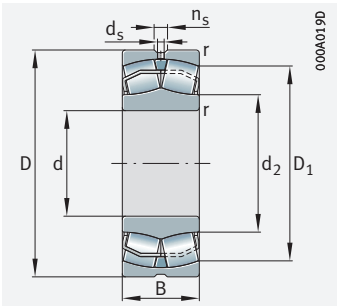

Cylindrical bore

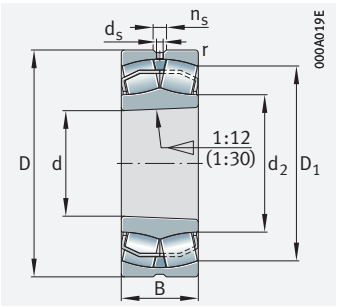

Tapered bore

d = 100 – 100 mm

Main dimensions			Basic load ratings		Fatigue limit load	Limiting speed	Speed rating	Mass	Designation
d	D	B	dyn. C_r	stat. C_{0r}	C_{ur}	n_G	$n_{\vartheta r}$	m	➤*695*|*1.12* ➤*696*|*1.13* X-life ➤*684*
			kN	kN	N	min^{-1}	min^{-1}	≈ kg	
100	165	52	450	570	54 000	4 000	2 750	4,1	**23120-E1-XL-K-TVPB**
	165	52	450	570	54 000	4 000	2 750	4,2	**23120-E1-XL-TVPB**
	165	52	450	570	54 000	4 000	2 750	4,2	**23120-E1A-XL-K-M**
	165	52	450	570	54 000	4 000	2 750	4,4	**23120-E1A-XL-M**
	180	46	430	475	53 000	4 550	3 150	4,96	**22220-E1-XL**
	180	46	430	475	53 000	4 550	3 150	4,91	**22220-E1-XL-K**
	180	60,3	560	660	61 000	3 750	2 410	6,1	**23220-E1-XL-K-TVPB**
	180	60,3	560	660	61 000	3 750	2 410	6,3	**23220-E1-XL-TVPB**
	180	60,3	560	660	61 000	3 750	2 410	6,3	**23220-E1A-XL-K-M**
	180	60,3	560	660	61 000	3 750	2 410	6,5	**23220-E1A-XL-M**
	215	47	495	530	62 000	4 400	3 050	8,08	**21320-E1-XL-K-TVPB**
	215	47	495	530	62 000	4 400	3 050	8,19	**21320-E1-XL-TVPB**
	215	73	810	920	77 000	3 300	2 380	13,1	**22320-E1-XL**
	215	73	810	920	77 000	3 300	2 380	13	**22320-E1-XL-K**

medias *https://www.schaeffler.de/std/1F9A*

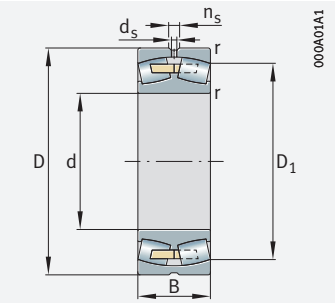

Solid cage, brass or steel; cylindrical bore

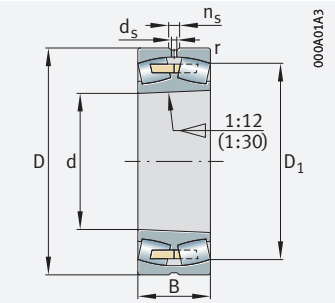

Solid cage, brass or steel; tapered bore

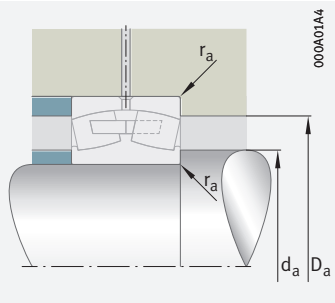

Mounting dimensions

Dimensions						Mounting dimensions			Calculation factors			
d	r min.	D_1 ≈	d_2 ≈	d_s	n_s	d_a min.	D_a max.	r_a max.	e	Y_1	Y_2	Y_0
100	2	146,3	113,9	3,2	6,5	111	154	2	0,28	2,37	3,53	2,32
	2	146,3	113,9	3,2	6,5	111	154	2	0,28	2,37	3,53	2,32
	2	146,3	–	3,2	6,5	111	154	2	0,28	2,37	3,53	2,32
	2	146,3	–	3,2	6,5	111	154	2	0,28	2,37	3,53	2,32
	2,1	161,4	119	4,8	9,5	112	168	2,1	0,24	2,84	4,23	2,78
	2,1	161,4	119	4,8	9,5	112	168	2,1	0,24	2,84	4,23	2,78
	2,1	156,7	116,7	4,8	9,5	112	168	2,1	0,31	2,15	3,2	2,1
	2,1	156,7	116,7	4,8	9,5	112	168	2,1	0,31	2,15	3,2	2,1
	2,1	156,7	–	4,8	9,5	112	168	2,1	0,31	2,15	3,2	2,1
	2,1	156,7	–	4,8	9,5	112	168	2,1	0,31	2,15	3,2	2,1
	3	182	132	4,8	9,5	114	201	2,5	0,22	3,14	4,67	3,07
	3	182	132	4,8	9,5	114	201	2,5	0,22	3,14	4,67	3,07
	3	184,7	130,2	6,3	12,2	114	201	2,5	0,33	2,03	3,02	1,98
	3	184,7	130,2	6,3	12,2	114	201	2,5	0,33	2,03	3,02	1,98

Spherical roller bearings

With cylindrical or tapered bore

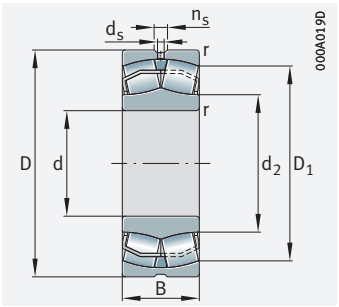

Cylindrical bore

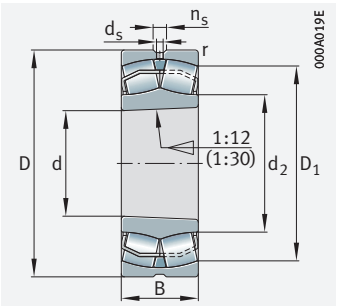

Tapered bore

d = 110 – 110 mm

Main dimensions			Basic load ratings		Fatigue limit load	Limiting speed	Speed rating	Mass	Designation
d	D	B	dyn. C_r	stat. C_{0r}	C_{ur}	n_G	$n_{\vartheta r}$	m	➤*695*|*1.12* ➤*696*|*1.13* X-life ➤*684*
			kN	kN	N	min^{-1}	min^{-1}	≈ kg	
110	170	45	400	530	54 000	4 200	3 000	3,4	**23022-E1-XL-K-TVPB**
	170	45	400	530	54 000	4 200	3 000	3,5	**23022-E1-XL-TVPB**
	170	45	400	530	54 000	4 200	3 000	3,8	**23022-E1A-XL-K-M**
	170	45	400	530	54 000	4 200	3 000	3,9	**23022-E1A-XL-M**
	180	56	530	680	62 000	3 700	2 550	4,9	**23122-E1-XL-K-TVPB**
	180	56	530	680	62 000	3 700	2 550	5,3	**23122-E1-XL-TVPB**
	180	56	530	680	62 000	3 700	2 550	5,1	**23122-E1A-XL-K-M**
	180	56	530	680	62 000	3 700	2 550	5,5	**23122-E1A-XL-M**
	180	69	530	750	86 000	3 350	1 960	6,8	**24122-BE-XL**
	180	69	530	750	86 000	3 350	1 960	6,7	**24122-BE-XL-K30**
	200	53	550	600	64 000	4 100	3 000	6,99	**22222-E1-XL**
	200	53	550	600	64 000	4 100	3 000	6,99	**22222-E1-XL-K**
	200	69,8	710	870	73 000	3 250	2 100	8,8	**23222-E1-XL-K-TVPB**
	200	69,8	710	870	73 000	3 250	2 100	9,2	**23222-E1-XL-TVPB**
	200	69,8	710	870	73 000	3 250	2 100	9,3	**23222-E1A-XL-K-M**
	200	69,8	710	870	73 000	3 250	2 100	9,5	**23222-E1A-XL-M**
	240	50	600	640	70 000	4 000	2 700	10,91	**21322-E1-XL-K-TVPB**
	240	50	600	640	70 000	4 000	2 700	11,06	**21322-E1-XL-TVPB**
	240	80	950	1 070	93 000	3 000	2 130	17,7	**22322-E1-XL**
	240	80	950	1 070	93 000	3 000	2 130	17,4	**22322-E1-XL-K**

medias *https://www.schaeffler.de/std/1F9A*

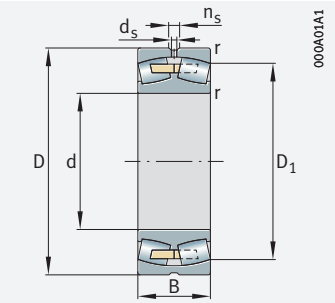

Solid cage, brass or steel; cylindrical bore

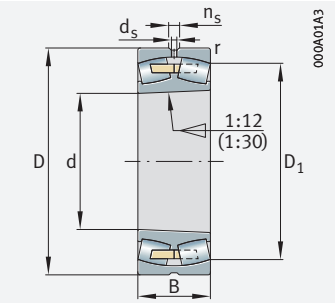

Solid cage, brass or steel; tapered bore

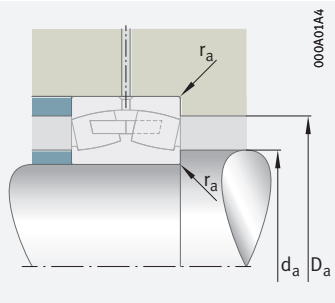

Mounting dimensions

Dimensions						Mounting dimensions			Calculation factors			
d	r min.	D_1 ≈	d_2 ≈	d_s	n_s	d_a min.	D_a max.	r_a max.	e	Y_1	Y_2	Y_0
110	2	154,6	123,7	3,2	6,5	118,8	161,2	2	0,23	2,9	4,31	2,83
	2	154,6	123,7	3,2	6,5	118,8	161,2	2	0,23	2,9	4,31	2,83
	2	154,6	–	3,2	6,5	118,8	161,2	2	0,23	2,9	4,31	2,83
	2	154,6	–	3,2	6,5	118,8	161,2	2	0,23	2,9	4,31	2,83
	2	160	124,6	4,8	9,5	121	169	2	0,28	2,39	3,56	2,34
	2	160	124,6	4,8	9,5	121	169	2	0,28	2,39	3,56	2,34
	2	160	–	4,8	9,5	121	169	2	0,28	2,41	3,59	2,35
	2	160	–	4,8	9,5	121	169	2	0,28	2,41	3,59	2,35
	2	154,9	125,6	3,2	6,5	121	169	2	0,34	1,96	2,92	1,92
	2	154,9	125,6	3,2	6,5	121	169	2	0,34	1,96	2,92	1,92
	2,1	178,7	129,4	4,8	9,5	122	188	2,1	0,25	2,71	4,04	2,65
	2,1	178,7	129,4	4,8	9,5	122	188	2,1	0,25	2,71	4,04	2,65
	2,1	172,7	129,1	4,8	9,5	122	188	2,1	0,33	2,06	3,06	2,01
	2,1	172,7	129,1	4,8	9,5	122	188	2,1	0,33	2,06	3,06	2,01
	2,1	172,7	–	4,8	9,5	122	188	2,1	0,33	2,06	3,06	2,01
	2,1	172,7	–	4,8	9,5	122	188	2,1	0,33	2,06	3,06	2,01
	3	202,5	146,4	6,3	12,2	124	226	2,5	0,21	3,24	4,82	3,16
	3	202,5	146,4	6,3	12,2	124	226	2,5	0,21	3,24	4,82	3,16
	3	204,9	143,1	8	15	124	226	2,5	0,33	2,07	3,09	2,03
	3	204,9	143,1	8	15	124	226	2,5	0,33	2,07	3,09	2,03

Spherical roller bearings

With cylindrical or tapered bore

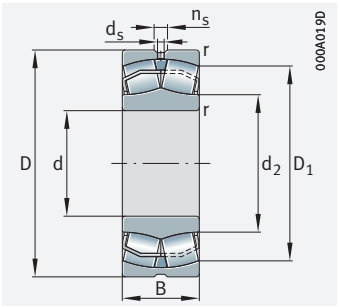

Cylindrical bore

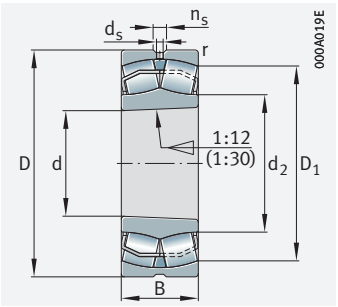

Tapered bore

d = 120 – 120 mm

Main dimensions			Basic load ratings		Fatigue limit load	Limiting speed	Speed rating	Mass	Designation
d	D	B	dyn. C_r	stat. C_{0r}	C_{ur}	n_G	$n_{\vartheta r}$	m	➤*695*|*1.12* ➤*696*|*1.13* X-life ➤*684*
			kN	kN	N	min^{-1}	min^{-1}	≈ kg	
120	180	46	430	580	60 000	3 950	2 800	3,7	**23024-E1-XL-K-TVPB**
	180	46	430	580	60 000	3 950	2 800	3,9	**23024-E1-XL-TVPB**
	180	46	430	580	60 000	3 950	2 800	4,1	**23024-E1A-XL-K-M**
	180	46	430	580	60 000	3 950	2 800	4,2	**23024-E1A-XL-M**
	180	60	450	690	86 000	3 450	2 360	5,6	**24024-BE-XL**
	180	60	450	690	86 000	3 450	2 360	5,4	**24024-BE-XL-K30**
	200	62	630	800	74 000	3 400	2 290	7,1	**23124-E1-XL-K-TVPB**
	200	62	630	800	74 000	3 400	2 290	7,4	**23124-E1-XL-TVPB**
	200	62	630	800	74 000	3 400	2 290	7,6	**23124-E1A-XL-K-M**
	200	62	630	800	74 000	3 400	2 290	7,7	**23124-E1A-XL-M**
	200	80	680	950	103 000	2 950	1 740	10,4	**24124-BE-XL**
	200	80	680	950	103 000	2 950	1 740	10,2	**24124-BE-XL-K30**
	215	58	640	740	73 000	3 650	2 700	8,84	**22224-E1-XL**
	215	58	640	740	70 000	3 650	2 700	8,84	**22224-E1-XL-K**
	215	76	820	1 020	82 000	3 000	1 910	11,1	**23224-E1-XL-K-TVPB**
	215	76	820	1 020	82 000	3 000	1 910	11,5	**23224-E1-XL-TVPB**
	215	76	820	1 020	82 000	3 000	1 910	11,4	**23224-E1A-XL-K-M**
	215	76	820	1 020	82 000	3 000	1 910	12,1	**23224-E1A-XL-M**
	260	86	1 080	1 170	105 000	2 850	2 000	22,3	**22324-E1-XL**
	260	86	1 080	1 170	105 000	2 850	2 000	22,1	**22324-E1-XL-K**

medias *https://www.schaeffler.de/std/1F9A*

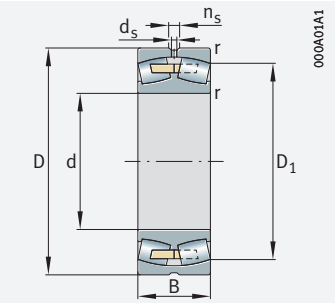

Solid cage, brass or steel; cylindrical bore

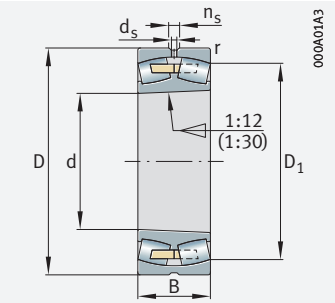

Solid cage, brass or steel; tapered bore

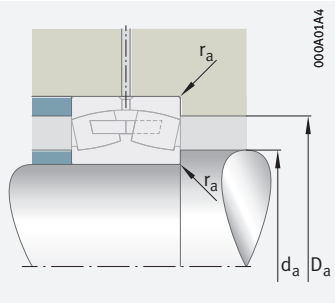

Mounting dimensions

Dimensions						Mounting dimensions			Calculation factors			
d	r min.	D_1 ≈	d_2 ≈	d_s	n_s	d_a min.	D_a max.	r_a max.	e	Y_1	Y_2	Y_0
120	2	164,7	133	3,2	6,5	128,8	171,2	2	0,22	3,04	4,53	2,97
	2	164,7	133	3,2	6,5	128,8	171,2	2	0,22	3,04	4,53	2,97
	2	164,7	–	3,2	6,5	128,8	171,2	2	0,22	3,04	4,53	2,97
	2	164,7	–	3,2	6,5	128,8	171,2	2	0,22	3,04	4,53	2,97
	2	159,8	134,5	3,2	6,5	128,8	171,2	2	0,29	2,33	3,47	2,28
	2	159,8	134,5	3,2	6,5	128,8	171,2	2	0,29	2,33	3,47	2,28
	2	177,4	136,2	4,8	9,5	131	189	2	0,28	2,39	3,56	2,34
	2	177,4	136,2	4,8	9,5	131	189	2	0,28	2,39	3,56	2,34
	2	177,4	–	4,8	9,5	131	189	2	0,28	2,39	3,56	2,34
	2	177,4	–	4,8	9,5	131	189	2	0,28	2,39	3,56	2,34
	2	170,3	136,6	3,2	6,5	131	189	2	0,37	1,84	2,74	1,8
	2	170,3	136,6	3,2	6,5	131	189	2	0,37	1,84	2,74	1,8
	2,1	192	141,9	6,3	12,2	132	203	2,1	0,25	2,71	4,04	2,65
	2,1	192	141,9	6,3	12,2	132	203	2,1	0,25	2,71	4,04	2,65
	2,1	185,5	139	4,8	9,5	132	203	2,1	0,33	2,03	3,02	1,98
	2,1	185,5	139	4,8	9,5	132	203	2,1	0,33	2,03	3,02	1,98
	2,1	185,5	–	4,8	9,5	132	203	2,1	0,33	2,03	3,02	1,98
	2,1	185,5	–	4,8	9,5	132	203	2,1	0,33	2,03	3,02	1,98
	3	222,4	150,8	8	15	134	246	2,5	0,33	2,06	3,06	2,01
	3	222,4	150,7	8	15	134	246	2,5	0,33	2,06	3,06	2,01

Spherical roller bearings

With cylindrical or tapered bore

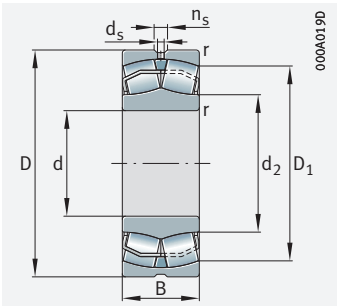

Cylindrical bore

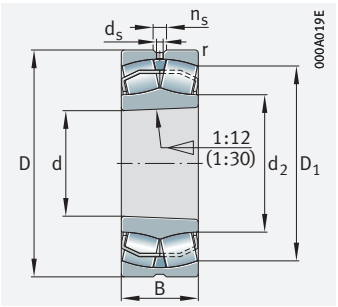

Tapered bore

d = 130 – 130 mm

Main dimensions			Basic load ratings		Fatigue limit load	Limiting speed	Speed rating	Mass	Designation
d	D	B	dyn. C_r	stat. C_{0r}	C_{ur}	n_G	$n_{\vartheta r}$	m	➤*695*|*1.12* ➤*696*|*1.13* X-life ➤*684*
			kN	kN	N	min^{-1}	min^{-1}	≈ kg	
130	200	52	540	730	71 000	3 600	2 600	5,4	**23026-E1-XL-K-TVPB**
	200	52	540	730	71 000	3 600	2 600	5,6	**23026-E1-XL-TVPB**
	200	52	540	730	71 000	3 600	2 600	5,7	**23026-E1A-XL-K-M**
	200	52	540	730	71 000	3 600	2 600	6	**23026-E1A-XL-M**
	200	69	570	860	103 000	3 100	2 130	8,4	**24026-BE-XL**
	200	69	570	860	103 000	3 100	2 130	8,1	**24026-BE-XL-K30**
	210	64	680	890	81 000	3 200	2 110	7,8	**23126-E1-XL-K-TVPB**
	210	64	680	890	81 000	3 200	2 110	8,1	**23126-E1-XL-TVPB**
	210	64	680	890	81 000	3 200	2 110	8,1	**23126-E1A-XL-K-M**
	210	64	680	890	81 000	3 200	2 110	8,5	**23126-E1A-XL-M**
	210	80	710	1 050	112 000	2 800	1 560	11	**24126-BE-XL**
	210	80	710	1 050	112 000	2 800	1 560	10,8	**24126-BE-XL-K30**
	230	64	760	890	81 000	3 350	2 500	11,1	**22226-E1-XL**
	230	64	760	890	81 000	3 350	2 500	10,9	**22226-E1-XL-K**
	230	80	910	1 150	91 000	2 850	1 740	12,6	**23226-E1-XL-K-TVPB**
	230	80	910	1 150	91 000	2 850	1 740	13,4	**23226-E1-XL-TVPB**
	230	80	910	1 150	91 000	2 850	1 740	13,6	**23226-E1A-XL-K-M**
	230	80	910	1 150	91 000	2 850	1 740	14	**23226-E1A-XL-M**
	280	93	1 250	1 370	120 000	2 650	1 820	28	**22326-E1-XL**
	280	93	1 250	1 370	120 000	2 650	1 820	27,4	**22326-E1-XL-K**

medias *https://www.schaeffler.de/std/1F9A*

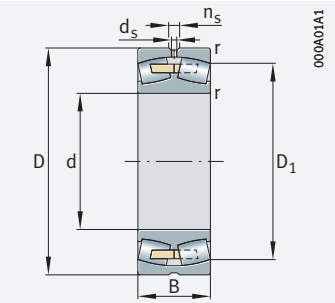

Solid cage, brass or steel; cylindrical bore

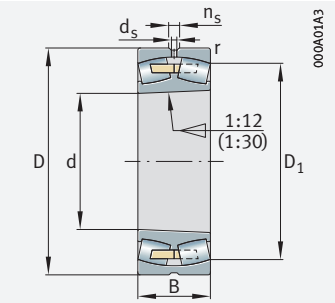

Solid cage, brass or steel; tapered bore

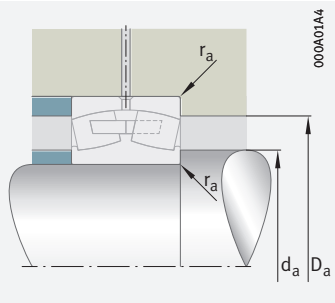

Mounting dimensions

Dimensions						Mounting dimensions			Calculation factors			
d	r min.	D_1 ≈	d_2 ≈	d_s	n_s	d_a min.	D_a max.	r_a max.	e	Y_1	Y_2	Y_0
130	2	182,3	145,9	4,8	9,5	138,8	191,2	2	0,23	2,95	4,4	2,89
	2	182,3	145,9	4,8	9,5	138,8	191,2	2	0,23	2,95	4,4	2,89
	2	182,3	–	4,8	9,5	138,8	191,2	2	0,23	2,95	4,4	2,89
	2	182,3	–	4,8	9,5	138,8	191,2	2	0,23	2,95	4,4	2,89
	2	176,1	146,2	3,2	6,5	138,8	191,2	2	0,31	2,21	3,29	2,16
	2	176,1	146,2	3,2	6,5	138,8	191,2	2	0,31	2,21	3,29	2,16
	2	187,3	146	4,8	9,5	141	199	2	0,28	2,45	3,64	2,39
	2	187,3	146	4,8	9,5	141	199	2	0,28	2,45	3,64	2,39
	2	187,3	–	4,8	9,5	141	199	2	0,28	2,45	3,64	2,39
	2	187,3	–	4,8	9,5	141	199	2	0,28	2,45	3,64	2,39
	2	181,2	148,3	3,2	6,5	141	199	2	0,34	1,98	2,94	1,93
	2	181,2	148,3	3,2	6,5	141	199	2	0,34	1,98	2,94	1,93
	3	205	151,7	6,3	12,2	144	216	2,5	0,26	2,62	3,9	2,56
	3	205	151,7	6,3	12,2	144	216	2,5	0,26	2,62	3,9	2,56
	3	199,3	150	4,8	9,5	144	216	2,5	0,33	2,07	3,09	2,03
	3	199,3	150	4,8	9,5	144	216	2,5	0,33	2,07	3,09	2,03
	3	–	–	4,8	9,5	144	216	2,5	0,33	2,07	3,09	2,03
	3	199,3	–	4,8	9,5	144	216	2,5	0,33	2,07	3,09	2,03
	4	239,5	162,2	9,5	17,7	147	263	3	0,33	2,06	3,06	2,01
	4	239,5	162,2	9,5	17,7	147	263	3	0,33	2,06	3,06	2,01

Spherical roller bearings

With cylindrical or tapered bore

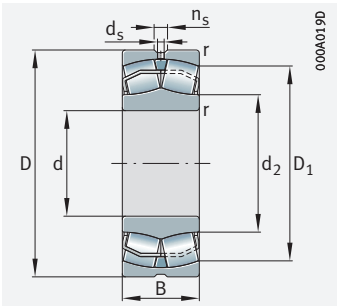

Cylindrical bore

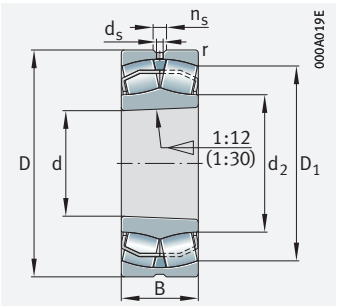

Tapered bore

d = 140 – 140 mm

Main dimensions			Basic load ratings		Fatigue limit load	Limiting speed	Speed rating	Mass	Designation
d	D	B	dyn. C_r	stat. C_{0r}	C_{ur}	n_G	$n_{\vartheta r}$	m	➤*695*|*1.12* ➤*696*|*1.13* X-life ➤*684*
			kN	kN	N	min^{-1}	min^{-1}	≈ kg	
140	210	53	570	800	77 000	3 450	2 390	5,8	**23028-E1-XL-K-TVPB**
	210	53	570	800	77 000	3 450	2 390	6	**23028-E1-XL-TVPB**
	210	53	570	800	77 000	3 450	2 390	6	**23028-E1A-XL-K-M**
	210	53	570	800	77 000	3 450	2 390	6,5	**23028-E1A-XL-M**
	210	69	590	930	111 000	2 950	1 950	8,4	**24028-BE-XL**
	210	69	590	930	111 000	2 950	1 950	8,1	**24028-BE-XL-K30**
	225	68	760	1 010	90 000	3 000	1 930	9,5	**23128-E1-XL-K-TVPB**
	225	68	760	1 010	90 000	3 000	1 930	9,8	**23128-E1-XL-TVPB**
	225	68	760	1 010	90 000	3 000	1 930	10,2	**23128-E1A-XL-K-M**
	225	68	760	1 010	90 000	3 000	1 930	10,4	**23128-E1A-XL-M**
	225	85	800	1 190	127 000	2 650	1 430	13,8	**24128-BE-XL**
	225	85	800	1 190	127 000	2 650	1 430	13,5	**24128-BE-XL-K30**
	250	68	870	1 040	100 000	3 150	2 250	14,1	**22228-E1-XL**
	250	68	870	1 040	100 000	3 150	2 250	13,7	**22228-E1-XL-K**
	250	88	1 090	1 400	116 000	2 600	1 550	17,1	**23228-E1-XL-K-TVPB**
	250	88	1 090	1 400	116 000	2 600	1 550	17,1	**23228-E1-XL-TVPB**
	250	88	1 090	1 400	116 000	2 600	1 550	17,6	**23228-E1A-XL-K-M**
	250	88	1 090	1 400	116 000	2 600	1 550	18,3	**23228-E1A-XL-M**
	300	102	1 460	1 630	135 000	2 420	1 660	34,6	**22328-E1-XL**
	300	102	1 460	1 630	135 000	2 420	1 660	34,4	**22328-E1-XL-K**

medias *https://www.schaeffler.de/std/1F9A*

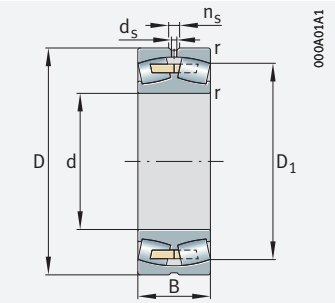

Solid cage, brass or steel; cylindrical bore

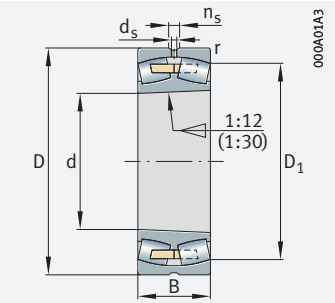

Solid cage, brass or steel; tapered bore

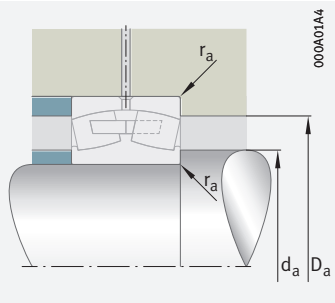

Mounting dimensions

Dimensions						Mounting dimensions			Calculation factors			
d	r min.	D_1 ≈	d_2 ≈	d_s	n_s	d_a min.	D_a max.	r_a max.	e	Y_1	Y_2	Y_0
140	2	192,3	155,4	4,8	9,5	148,8	201,2	2	0,22	3,07	4,57	3
	2	192,3	155,4	4,8	9,5	148,8	201,2	2	0,22	3,07	4,57	3
	2	192,3	–	4,8	9,5	148,8	201,2	2	0,22	3,07	4,57	3
	2	192,3	–	4,8	9,5	148,8	201,2	2	0,22	3,07	4,57	3
	2	186,4	157,1	3,2	6,5	148,8	201,2	2	0,28	2,37	3,53	2,32
	2	186,4	157,1	3,2	6,5	148,8	201,2	2	0,28	2,37	3,53	2,32
	2,1	201	157,1	4,8	9,5	152	213	2,1	0,27	2,49	3,71	2,43
	2,1	201	157,1	4,8	9,5	152	213	2,1	0,27	2,49	3,71	2,43
	2,1	201	–	4,8	9,5	152	213	2,1	0,27	2,49	3,71	2,43
	2,1	–	–	4,8	9,5	152	213	2,1	0,27	2,49	3,71	2,43
	2,1	194,4	158,9	4,8	9,5	152	213	2,1	0,34	1,99	2,96	1,94
	2,1	194,4	158,9	4,8	9,5	152	213	2,1	0,34	1,99	2,96	1,94
	3	223,1	164,9	6,3	12,2	154	236	2,5	0,25	2,67	3,97	2,61
	3	223,1	164,9	6,3	12,2	154	236	2,5	0,25	2,67	3,97	2,61
	3	216	162	6,3	12,2	154	236	2,5	0,33	2,04	3,04	2
	3	216	162	6,3	12,2	154	236	2,5	0,33	2,04	3,04	2
	3	216	–	6,3	12,2	154	236	2,5	0,33	2,04	3,04	2
	3	216	–	6,3	12,2	154	236	2,5	0,33	2,04	3,04	2
	4	255,7	173,5	9,5	17,7	157	283	3	0,34	2	2,98	1,96
	4	255,7	173,5	9,5	17,7	157	283	3	0,34	2	2,98	1,96

Spherical roller bearings

With cylindrical or tapered bore

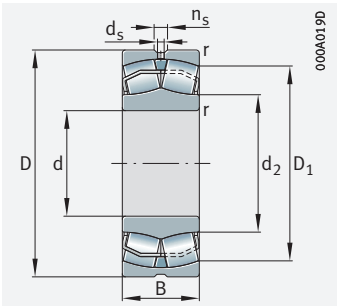

Cylindrical bore

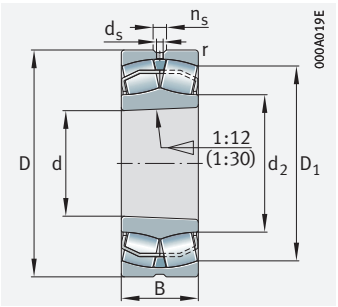

Tapered bore

d = 150 – 150 mm

Main dimensions			Basic load ratings		Fatigue limit load	Limiting speed	Speed rating	Mass	Designation
d	D	B	dyn. C_r	stat. C_{0r}	C_{ur}	n_G	$n_{\vartheta r}$	m	➤*695*|*1.12* ➤*696*|*1.13* X-life ➤*684*
			kN	kN	N	min^{-1}	min^{-1}	≈ kg	
150	225	56	630	880	87 000	3 250	2 210	7,3	**23030-E1-XL-K-TVPB**
	225	56	630	880	87 000	3 250	2 210	7,6	**23030-E1-XL-TVPB**
	225	56	630	880	87 000	3 250	2 210	7,3	**23030-E1A-XL-K-M**
	225	56	630	880	87 000	3 250	2 210	7,8	**23030-E1A-XL-M**
	225	75	680	1 090	125 000	2 750	1 790	11,1	**24030-BE-XL**
	225	75	680	1 090	125 000	2 750	1 790	10,7	**24030-BE-XL-K30**
	250	80	1 000	1 330	145 000	2 650	1 720	14,5	**23130-E1-XL-K-TVPB**
	250	80	1 000	1 330	145 000	2 650	1 720	15	**23130-E1-XL-TVPB**
	250	80	1 000	1 330	145 000	2 650	1 720	15,8	**23130-E1A-XL-K-M**
	250	80	1 000	1 330	145 000	2 650	1 720	16,3	**23130-E1A-XL-M**
	250	100	1 050	1 520	153 000	2 370	1 270	20,6	**24130-BE-XL**
	250	100	1 050	1 520	153 000	2 370	1 270	20,2	**24130-BE-XL-K30**
	270	73	1 010	1 210	114 000	2 900	2 050	18,2	**22230-E1-XL**
	270	73	1 010	1 210	114 000	2 900	2 050	17,8	**22230-E1-XL-K**
	270	96	1 280	1 660	133 000	2 400	1 400	22,3	**23230-E1-XL-K-TVPB**
	270	96	1 280	1 660	133 000	2 400	1 400	22,9	**23230-E1-XL-TVPB**
	270	96	1 280	1 660	133 000	2 400	1 400	22,9	**23230-E1A-XL-K-M**
	270	96	1 280	1 660	133 000	2 400	1 400	23,8	**23230-E1A-XL-M**
	320	108	1 640	1 850	151 000	2 290	1 520	42,2	**22330-E1-XL**
	320	108	1 640	1 850	151 000	2 290	1 520	40,9	**22330-E1-XL-K**

medias *https://www.schaeffler.de/std/1F9A*

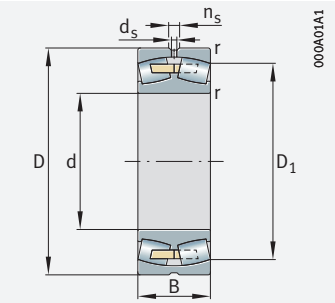

Solid cage, brass or steel; cylindrical bore

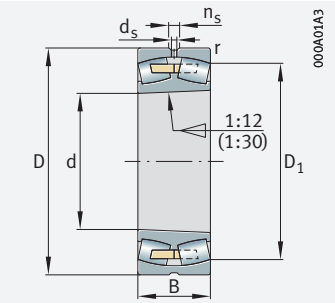

Solid cage, brass or steel; tapered bore

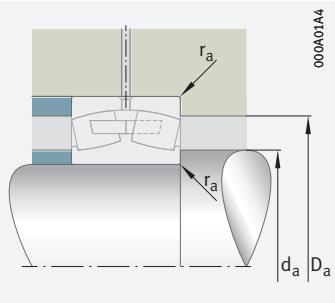

Mounting dimensions

Dimensions						Mounting dimensions			Calculation factors			
d	r min.	D_1 ≈	d_2 ≈	d_s	n_s	d_a min.	D_a max.	r_a max.	e	Y_1	Y_2	Y_0
150	2,1	206,3	166,6	4,8	9,5	160,2	214,8	2,1	0,22	3,1	4,62	3,03
	2,1	206,3	166,6	4,8	9,5	160,2	214,8	2,1	0,22	3,1	4,62	3,03
	2,1	206,3	–	4,8	9,5	160,2	214,8	2,1	0,22	3,1	4,62	3,03
	2,1	206,3	–	4,8	9,5	160,2	214,8	2,1	0,22	3,1	4,62	3,03
	2,1	199,4	168,1	3,2	6,5	160,2	214,8	2,1	0,29	2,32	3,45	2,26
	2,1	199,4	168,1	3,2	6,5	160,2	214,8	2,1	0,29	2,32	3,45	2,26
	2,1	220,8	170,1	6,3	12,2	162	238	2,1	0,29	2,32	3,45	2,26
	2,1	220,8	170,2	6,3	12,2	162	238	2,1	0,29	2,32	3,45	2,26
	2,1	220,8	–	6,3	12,2	162	238	2,1	0,29	2,32	3,45	2,26
	2,1	220,8	–	6,3	12,2	162	238	2,1	0,29	2,32	3,45	2,26
	2,1	213	170,3	4,8	9,5	162	238	2,1	0,37	1,83	2,72	1,79
	2,1	213	170,3	4,8	9,5	162	238	2,1	0,37	1,83	2,72	1,79
	3	240,8	177,9	8	15	164	256	2,5	0,25	2,69	4	2,63
	3	240,8	177,9	8	15	164	256	2,5	0,25	2,69	4	2,63
	3	232,6	174	6,3	12,2	164	256	2,5	0,33	2,02	3	1,97
	3	232,6	174	6,3	12,2	164	256	2,5	0,33	2,02	3	1,97
	3	232,6	–	6,3	12,2	164	256	2,5	0,33	2,02	3	1,97
	3	232,6	–	6,3	12,2	164	256	2,5	0,33	2,02	3	1,97
	4	273,2	185,3	9,5	17,7	167	303	3	0,33	2,02	3	1,97
	4	273,2	185,3	9,5	17,7	167	303	3	0,33	2,02	3	1,97

Spherical roller bearings

With cylindrical or tapered bore

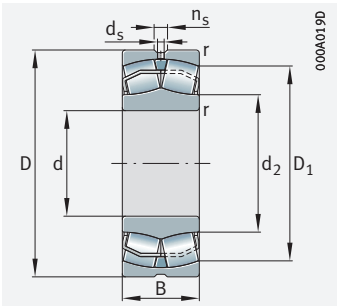

Cylindrical bore

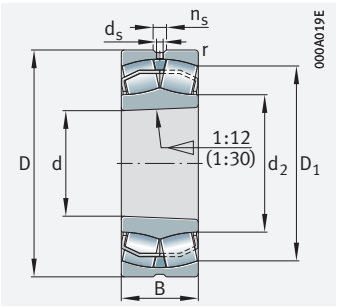

Tapered bore

d = 160 – 160 mm

Main dimensions			Basic load ratings		Fatigue limit load	Limiting speed	Speed rating	Mass	Designation
d	D	B	dyn. C_r	stat. C_{0r}	C_{ur}	n_G	$n_{\vartheta r}$	m	➤*695|1.12* ➤*696|1.13* X-life ➤*684*
			kN	kN	N	min^{-1}	min^{-1}	≈ kg	
160	240	60	720	1 010	98 000	3 050	2 060	8,7	**23032-E1-XL-K-TVPB**
	240	60	720	1 010	98 000	3 050	2 060	9	**23032-E1-XL-TVPB**
	240	60	720	1 010	98 000	3 050	2 060	9,4	**23032-E1A-XL-K-M**
	240	60	720	1 010	98 000	3 050	2 060	9,5	**23032-E1A-XL-M**
	240	80	770	1 240	140 000	2 550	1 660	12,7	**24032-BE-XL**
	240	80	770	1 240	140 000	2 550	1 660	12,2	**24032-BE-XL-K30**
	270	86	1 160	1 550	166 000	2 490	1 560	18,5	**23132-E1-XL-K-TVPB**
	270	86	1 160	1 550	166 000	2 490	1 560	19,1	**23132-E1-XL-TVPB**
	270	86	1 160	1 550	166 000	2 490	1 560	18,6	**23132-E1A-XL-K-M**
	270	86	1 160	1 550	166 000	2 490	1 560	20	**23132-E1A-XL-M**
	270	109	1 220	1 800	173 000	2 180	1 140	25,4	**24132-BE-XL**
	270	109	1 220	1 800	173 000	2 180	1 140	24,9	**24132-BE-XL-K30**
	290	80	1 150	1 400	129 000	2 650	1 900	23,3	**22232-E1-XL**
	290	80	1 150	1 400	129 000	2 650	1 900	22,4	**22232-E1-XL-K**
	290	104	1 460	1 910	150 000	2 210	1 280	27,7	**23232-E1-XL-K-TVPB**
	290	104	1 460	1 910	150 000	2 210	1 280	28,6	**23232-E1-XL-TVPB**
	290	104	1 460	1 910	150 000	2 210	1 280	28,5	**23232-E1A-XL-K-M**
	290	104	1 460	1 910	150 000	2 210	1 280	29,8	**23232-E1A-XL-M**
	340	114	1 680	1 990	162 000	2 250	1 420	48,4	**22332-BE-XL**
	340	114	1 680	1 990	162 000	2 250	1 420	47,3	**22332-BE-XL-K**

medias *https://www.schaeffler.de/std/1F9A*

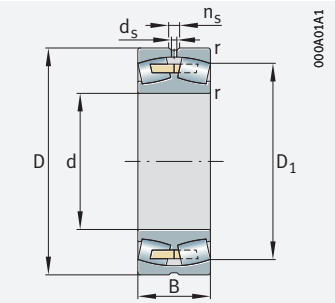

Solid cage, brass or steel; cylindrical bore

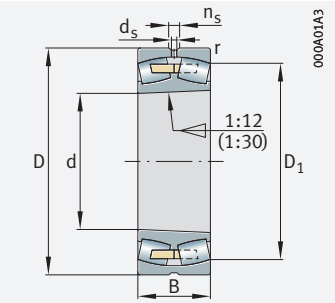

Solid cage, brass or steel; tapered bore

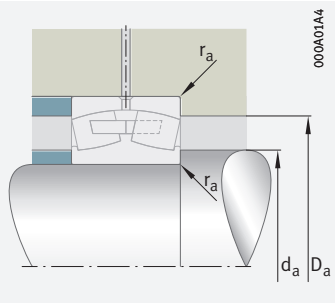

Mounting dimensions

Dimensions						Mounting dimensions			Calculation factors			
d	r min.	D_1 ≈	d_2 ≈	d_s	n_s	d_a min.	D_a max.	r_a max.	e	Y_1	Y_2	Y_0
160	2,1	219,9	177	6,3	12,2	170,2	229,8	2,1	0,22	3,1	4,62	3,03
	2,1	219,9	177,5	6,3	12,2	170,2	229,8	2,1	0,22	3,1	4,62	3,03
	2,1	219,9	–	6,3	12,2	170,2	229,8	2,1	0,22	3,1	4,62	3,03
	2,1	219,9	–	6,3	12,2	170,2	229,8	2,1	0,22	3,1	4,62	3,03
	2,1	212,5	179,3	4,8	9,5	170,2	229,8	2,1	0,29	2,32	3,45	2,26
	2,1	212,5	179,3	4,8	9,5	170,2	229,8	2,1	0,29	2,32	3,45	2,26
	2,1	238,3	183,2	8	15	172	258	2,1	0,29	2,32	3,45	2,26
	2,1	238,3	183,2	8	15	172	258	2,1	0,29	2,32	3,45	2,26
	2,1	238,3	–	8	15	172	258	2,1	0,29	2,32	3,45	2,26
	2,1	238,3	–	8	15	172	258	2,1	0,29	2,32	3,45	2,26
	2,1	228,9	183,4	4,8	9,5	172	258	2,1	0,37	1,8	2,69	1,76
	2,1	228,9	183,4	4,8	9,5	172	258	2,1	0,37	1,8	2,69	1,76
	3	258,2	190,9	8	15	174	276	2,5	0,26	2,64	3,93	2,58
	3	258,2	190,9	8	15	174	276	2,5	0,26	2,64	3,93	2,58
	3	249,3	186,7	8	15	174	276	2,5	0,34	2	2,98	1,96
	3	249,3	186,7	8	15	174	276	2,5	0,34	2	2,98	1,96
	3	249,3	–	8	15	174	276	2,5	0,34	2	2,98	1,96
	3	–	–	8	15	174	276	2,5	0,34	2	2,98	1,96
	4	286,7	201,2	9,5	17,7	177	323	3	0,35	1,94	2,88	1,89
	4	286,7	201,2	9,5	17,7	177	323	3	0,35	1,94	2,88	1,89

Spherical roller bearings

With cylindrical or tapered bore

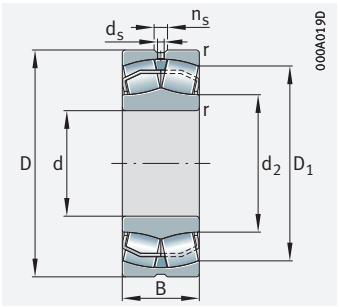

Cylindrical bore

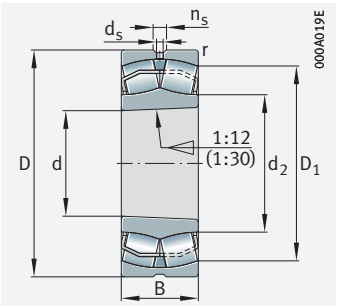

Tapered bore

d = 170 – 170 mm

Main dimensions			Basic load ratings		Fatigue limit load	Limiting speed	Speed rating	Mass	Designation
d	D	B	dyn. C_r	stat. C_{0r}	C_{ur}	n_G	$n_{\vartheta r}$	m	➤*695*|*1.12* ➤*696*|*1.13* X-life ➤*684*
			kN	kN	N	min^{-1}	min^{-1}	≈ kg	
170	260	67	880	1 230	151 000	2 800	1 890	11,9	**23034-E1-XL-K-TVPB**
	260	67	880	1 230	151 000	2 800	1 890	12,3	**23034-E1-XL-TVPB**
	260	67	880	1 230	151 000	2 800	1 890	12,5	**23034-E1A-XL-K-M**
	260	67	880	1 230	151 000	2 800	1 890	12,8	**23034-E1A-XL-M**
	260	90	940	1 480	162 000	2 380	1 540	17,2	**24034-BE-XL**
	260	90	940	1 480	162 000	2 380	1 540	16,5	**24034-BE-XL-K30**
	280	88	1 220	1 690	177 000	2 380	1 460	19,9	**23134-E1-XL-K-TVPB**
	280	88	1 220	1 690	177 000	2 380	1 460	20,7	**23134-E1-XL-TVPB**
	280	88	1 220	1 690	177 000	2 380	1 460	19,5	**23134-E1A-XL-K-M**
	280	88	1 220	1 690	177 000	2 380	1 460	22,1	**23134-E1A-XL-M**
	280	109	1 260	1 900	184 000	2 110	1 060	26,4	**24134-BE-XL**
	280	109	1 260	1 900	184 000	2 110	1 060	25,9	**24134-BE-XL-K30**
	310	86	1 320	1 570	144 000	2 550	1 780	27,8	**22234-E1-XL**
	310	86	1 320	1 570	144 000	2 550	1 780	27,1	**22234-E1-XL-K**
	310	110	1 640	2 170	168 000	2 090	1 160	33,1	**23234-E1-XL-K-TVPB**
	310	110	1 640	2 170	168 000	2 090	1 160	34,9	**23234-E1-XL-TVPB**
	310	110	1 640	2 170	168 000	2 090	1 160	34,6	**23234-E1A-XL-K-M**
	310	110	1 640	2 170	168 000	2 090	1 160	35,7	**23234-E1A-XL-M**
	360	120	1 870	2 220	178 000	2 130	1 320	58,2	**22334-BE-XL**
	360	120	1 870	2 220	178 000	2 130	1 320	56,9	**22334-BE-XL-K**

medias *https://www.schaeffler.de/std/1F9A*

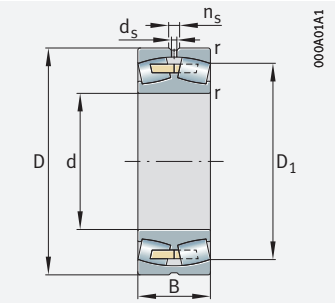

Solid cage, brass or steel; cylindrical bore

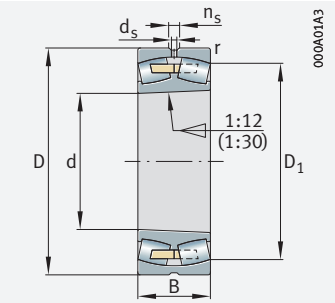

Solid cage, brass or steel; tapered bore

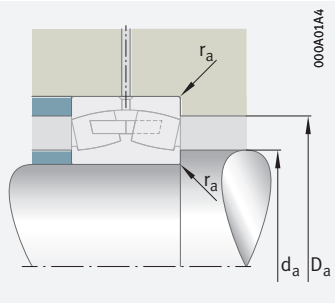

Mounting dimensions

Dimensions						Mounting dimensions			Calculation factors			
d	r min.	D_1 ≈	d_2 ≈	d_s	n_s	d_a min.	D_a max.	r_a max.	e	Y_1	Y_2	Y_0
170	2,1	237,2	189,8	6,3	12,2	180,2	249,8	2,1	0,23	2,98	4,44	2,92
	2,1	237,2	189,8	6,3	12,2	180,2	249,8	2,1	0,23	2,98	4,44	2,92
	2,1	–	–	6,3	12,2	180,2	249,8	2,1	0,23	2,98	4,44	2,92
	2,1	237,2	–	6,3	12,2	180,2	249,8	2,1	0,23	2,98	4,44	2,92
	2,1	228,4	190	4,8	9,5	180,2	249,8	2,1	0,31	2,2	3,27	2,15
	2,1	228,4	190	4,8	9,5	180,2	249,8	2,1	0,31	2,2	3,27	2,15
	2,1	248,1	193,4	8	15	182	268	2,1	0,28	2,37	3,53	2,32
	2,1	248,1	193,4	8	15	182	268	2,1	0,28	2,37	3,53	2,32
	2,1	–	–	8	15	182	268	2,1	0,28	2,37	3,53	2,32
	2,1	248,1	–	8	15	182	268	2,1	0,28	2,37	3,53	2,32
	2,1	240	194,1	4,8	9,5	182	268	2,1	0,36	1,9	2,83	1,86
	2,1	240	194,1	4,8	9,5	182	268	2,1	0,36	1,9	2,83	1,86
	4	275,4	199,8	9,5	17,7	187	293	3	0,26	2,6	3,87	2,54
	4	275,4	199,8	9,5	17,7	187	293	3	0,26	2,6	3,87	2,54
	4	267,4	199,8	8	15	187	293	3	0,33	2,03	3,02	1,98
	4	267,4	199,8	8	15	187	293	3	0,33	2,03	3,02	1,98
	4	267,4	–	8	15	187	293	3	0,33	2,03	3,02	1,98
	4	267,4	–	8	15	187	293	3	0,33	2,03	3,02	1,98
	4	303,9	213,1	9,5	17,7	187	343	3	0,35	1,95	2,9	1,91
	4	303,9	213,1	9,5	17,7	187	343	3	0,35	1,95	2,9	1,91

Spherical roller bearings

With cylindrical or tapered bore

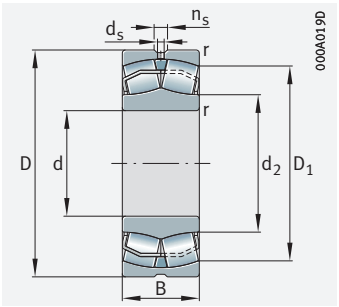

Cylindrical bore

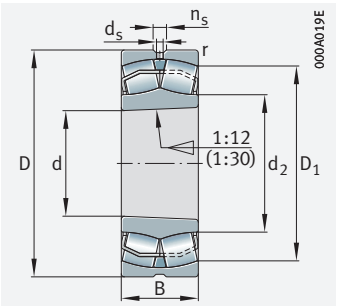

Tapered bore

d = 180 – 180 mm

Main dimensions			Basic load ratings		Fatigue limit load	Limiting speed	Speed rating	Mass	Designation
d	D	B	dyn. C_r	stat. C_{0r}	C_{ur}	n_G	$n_{\vartheta r}$	m	➤*695|1.12* ➤*696|1.13* X-life ➤*684*
			kN	kN	N	min^{-1}	min^{-1}	≈ kg	
180	250	52	445	840	59 000	3 200	1 850	7,8	**23936-S-K-MB**
	250	52	445	840	59 000	3 200	1 850	8	**23936-S-MB**
	280	74	1 040	1 450	173 000	2 600	1 760	15,6	**23036-E1-XL-K-TVPB**
	280	74	1 040	1 450	173 000	2 600	1 760	15,9	**23036-E1-XL-TVPB**
	280	74	1 040	1 450	173 000	2 600	1 760	16	**23036-E1A-XL-K-M**
	280	74	1 040	1 450	173 000	2 600	1 760	16,8	**23036-E1A-XL-M**
	280	100	1 130	1 770	185 000	2 200	1 420	22,7	**24036-BE-XL**
	280	100	1 130	1 770	185 000	2 200	1 420	21,8	**24036-BE-XL-K30**
	300	96	1 420	1 950	199 000	2 230	1 350	25,9	**23136-E1-XL-K-TVPB**
	300	96	1 420	1 950	199 000	2 230	1 350	27,3	**23136-E1-XL-TVPB**
	300	96	1 420	1 950	199 000	2 230	1 350	25,5	**23136-E1A-XL-K-M**
	300	96	1 420	1 950	199 000	2 230	1 350	26,1	**23136-E1A-XL-M**
	300	118	1 460	2 170	208 000	2 000	980	33,2	**24136-BE-XL**
	300	118	1 460	2 170	208 000	2 000	980	32,5	**24136-BE-XL-K30**
	320	86	1 360	1 680	152 000	2 470	1 670	29,2	**22236-E1-XL**
	320	86	1 360	1 680	152 000	2 470	1 670	28,5	**22236-E1-XL-K**
	320	112	1 720	2 340	178 000	2 010	1 090	36	**23236-E1-XL-K-TVPB**
	320	112	1 720	2 340	178 000	2 010	1 090	37,2	**23236-E1-XL-TVPB**
	320	112	1 720	2 340	178 000	2 010	1 090	37	**23236-E1A-XL-K-M**
	320	112	1 720	2 340	178 000	2 010	1 090	38,5	**23236-E1A-XL-M**
	380	126	2 060	2 460	195 000	2 030	1 230	68,1	**22336-BE-XL**
	380	126	2 060	2 460	195 000	2 030	1 230	66,6	**22336-BE-XL-K**

medias *https://www.schaeffler.de/std/1F9A*

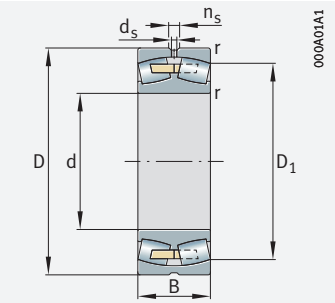

Solid cage, brass or steel; cylindrical bore

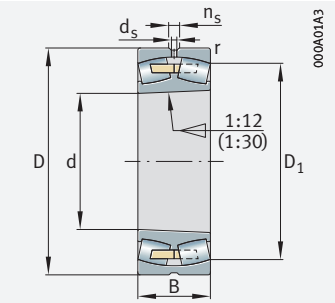

Solid cage, brass or steel; tapered bore

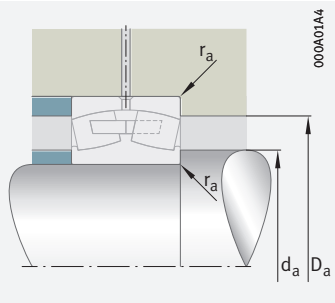

Mounting dimensions

Dimensions						Mounting dimensions			Calculation factors			
d	r min.	D_1 ≈	d_2 ≈	d_s	n_s	d_a min.	D_a max.	r_a max.	e	Y_1	Y_2	Y_0
180	2	230,9	–	4,8	9,5	188,8	241,2	2	0,2	3,42	5,09	3,34
	2	230,9	–	4,8	9,5	188,8	241,2	2	0,2	3,42	5,09	3,34
	2,1	254,3	201,8	8	15	190,2	269,8	2,1	0,23	2,9	4,31	2,83
	2,1	254,3	201,8	8	15	190,2	269,8	2,1	0,23	2,9	4,31	2,83
	2,1	254,3	–	8	15	190,2	269,8	2,1	0,23	2,9	4,31	2,83
	2,1	254,3	–	8	15	190,2	269,8	2,1	0,23	2,9	4,31	2,83
	2,1	244,6	201,7	4,8	9,5	190,2	269,8	2,1	0,32	2,1	3,13	2,06
	2,1	244,6	201,7	4,8	9,5	190,2	269,8	2,1	0,32	2,1	3,13	2,06
	3	264,8	204,1	8	15	194	286	2,5	0,29	2,32	3,45	2,26
	3	264,8	204,1	8	15	194	286	2,5	0,29	2,32	3,45	2,26
	3	264,8	–	8	15	194	286	2,5	0,29	2,32	3,45	2,26
	3	264,8	–	8	15	194	286	2,5	0,29	2,32	3,45	2,26
	3	255,7	204,8	6,3	12,2	194	286	2,5	0,36	1,86	2,77	1,82
	3	255,7	204,8	6,3	12,2	194	286	2,5	0,36	1,86	2,77	1,82
	4	285,9	211,3	9,5	17,7	197	303	3	0,25	2,71	4,04	2,65
	4	285,9	211,3	9,5	17,7	197	303	3	0,25	2,71	4,04	2,65
	4	277,3	210,6	8	15	197	303	3	0,33	2,07	3,09	2,03
	4	277,3	210,6	8	15	197	303	3	0,33	2,07	3,09	2,03
	4	277,3	–	8	15	197	303	3	0,33	2,07	3,09	2,03
	4	277,3	–	8	15	197	303	3	0,33	2,07	3,09	2,03
	4	320,8	224,9	12,5	23,5	197	363	3	0,34	1,96	2,92	1,92
	4	320,8	224,9	12,5	23,5	197	363	3	0,34	1,96	2,92	1,92

Spherical roller bearings

With cylindrical or tapered bore

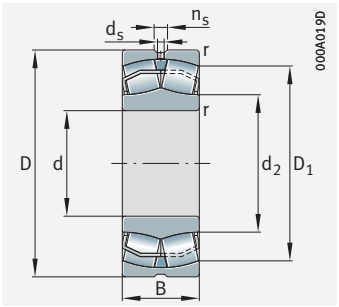

Cylindrical bore

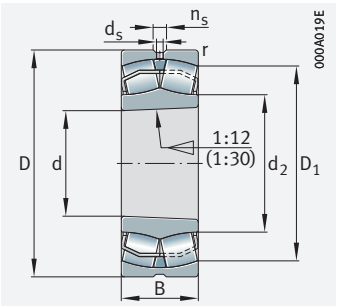

Tapered bore

d = 190 – 190 mm

Main dimensions			Basic load ratings		Fatigue limit load	Limiting speed	Speed rating	Mass	Designation
d	D	B	dyn. C_r	stat. C_{0r}	C_{ur}	n_G	$n_{\vartheta r}$	m	➤*695*|*1.12* ➤*696*|*1.13* X-life ➤*684*
			kN	kN	N	min^{-1}	min^{-1}	≈ kg	
190	260	52	470	890	64 000	3 150	1 750	8,1	**23938-S-K-MB**
	260	52	470	890	64 000	3 150	1 750	8,4	**23938-S-MB**
	290	75	1 080	1 550	183 000	2 490	1 660	16,3	**23038-E1-XL-K-TVPB**
	290	75	1 080	1 550	183 000	2 490	1 660	17,2	**23038-E1-XL-TVPB**
	290	75	1 080	1 550	183 000	2 490	1 660	17,7	**23038-E1A-XL-K-M**
	290	75	1 080	1 550	183 000	2 490	1 660	18,3	**23038-E1A-XL-M**
	290	100	1 160	1 860	197 000	2 140	1 330	23,7	**24038-BE-XL**
	290	100	1 160	1 860	197 000	2 140	1 330	22,8	**24038-BE-XL-K30**
	320	104	1 610	2 220	222 000	2 070	1 260	30,3	**23138-E1-XL-K-TVPB**
	320	104	1 610	2 220	222 000	2 070	1 260	32	**23138-E1-XL-TVPB**
	320	104	1 610	2 220	222 000	2 070	1 260	32,4	**23138-E1A-XL-K-M**
	320	104	1 610	2 220	222 000	2 070	1 260	33,9	**23138-E1A-XL-M**
	320	128	1 680	2 550	232 000	1 850	880	41,5	**24138-BE-XL**
	320	128	1 680	2 550	232 000	1 850	880	40,7	**24138-BE-XL-K30**
	340	92	1 360	1 760	164 000	2 480	1 620	36,8	**22238-BE-XL**
	340	92	1 360	1 760	164 000	2 480	1 620	36	**22238-BE-XL-K**
	340	120	1 740	2 400	206 000	1 990	1 070	44,1	**23238-BE-XL**
	340	120	1 740	2 400	206 000	1 990	1 070	42,6	**23238-BE-XL-K**
	400	132	2 220	2 650	213 000	1 940	1 160	78,9	**22338-BE-XL**
	400	132	2 220	2 650	213 000	1 940	1 160	77,2	**22338-BE-XL-K**

medias *https://www.schaeffler.de/std/1F9A*

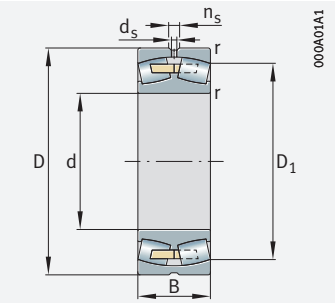

Solid cage, brass or steel; cylindrical bore

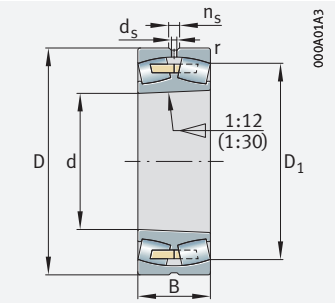

Solid cage, brass or steel; tapered bore

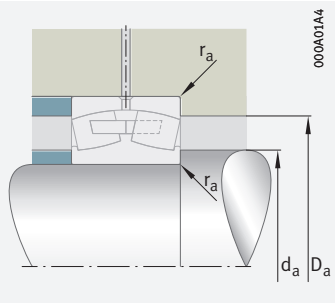

Mounting dimensions

Dimensions						Mounting dimensions			Calculation factors			
d	r min.	D_1 ≈	d_2 ≈	d_s	n_s	d_a min.	D_a max.	r_a max.	e	Y_1	Y_2	Y_0
190	2	–	–	4,8	9,5	198,8	251,2	2	0,18	3,66	5,46	3,58
	2	240,2	–	4,8	9,5	198,8	251,2	2	0,18	3,66	5,46	3,58
	2,1	264,5	211,9	8	15	200,2	279,8	2,1	0,23	2,98	4,44	2,92
	2,1	264,5	211,9	8	15	200,2	279,8	2,1	0,23	2,98	4,44	2,92
	2,1	264,5	–	8	15	200,2	279,8	2,1	0,23	2,98	4,44	2,92
	2,1	264,5	–	8	15	200,2	279,8	2,1	0,23	2,98	4,44	2,92
	2,1	255	211,9	4,8	9,5	200,2	279,8	2,1	0,31	2,2	3,27	2,15
	2,1	255	211,9	4,8	9,5	200,2	279,8	2,1	0,31	2,2	3,27	2,15
	3	281,6	217	8	15	204	306	2,5	0,3	2,28	3,39	2,23
	3	281,6	217	8	15	204	306	2,5	0,3	2,28	3,39	2,23
	3	281,6	–	8	15	204	306	2,5	0,3	2,28	3,39	2,23
	3	281,6	–	8	15	204	306	2,5	0,3	2,28	3,39	2,23
	3	271,6	217,4	6,3	12,2	204	306	2,5	0,37	1,82	2,7	1,78
	3	271,6	217,4	6,3	12,2	204	306	2,5	0,37	1,82	2,7	1,78
	4	295,2	225,2	9,5	17,7	207	323	3	0,26	2,6	3,87	2,54
	4	295,2	225,2	9,5	17,7	207	323	3	0,26	2,6	3,87	2,54
	4	289	222,4	9,5	17,7	207	323	3	0,34	1,98	2,94	1,93
	4	289	222,4	9,5	17,7	207	323	3	0,34	1,98	2,94	1,93
	5	338,1	236,8	12,5	23,5	210	380	4	0,34	1,96	2,92	1,92
	5	338,1	236,8	12,5	23,5	210	380	4	0,34	1,96	2,92	1,92

Spherical roller bearings

With cylindrical or tapered bore

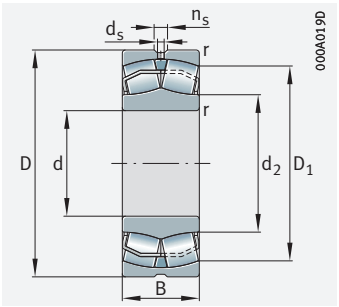

Cylindrical bore

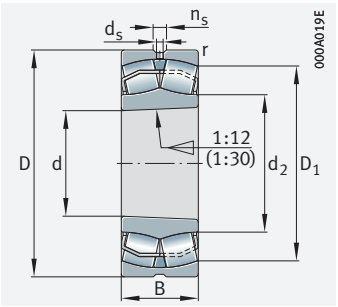

Tapered bore

d = 200 – 200 mm

Main dimensions			Basic load ratings		Fatigue limit load	Limiting speed	Speed rating	Mass	Designation
d	D	B	dyn. C_r	stat. C_{0r}	C_{ur}	n_G	$n_{\vartheta r}$	m	➤*695*|*1.12* ➤*696*|*1.13* X-life ➤*684*
			kN	kN	N	min^{-1}	min^{-1}	≈ kg	
200	280	60	550	1 070	73 000	2 800	1 650	11,5	**23940-S-K-MB**
	280	60	550	1 070	73 000	2 800	1 650	11,8	**23940-S-MB**
	310	82	1 270	1 800	206 000	2 330	1 550	20,8	**23040-E1-XL-K-TVPB**
	310	82	1 270	1 800	206 000	2 330	1 550	21,5	**23040-E1-XL-TVPB**
	310	82	1 270	1 800	206 000	2 330	1 550	21,4	**23040-E1A-XL-K-M**
	310	82	1 270	1 800	206 000	2 330	1 550	22,8	**23040-E1A-XL-M**
	310	109	1 350	2 150	221 000	2 010	1 240	30,1	**24040-BE-XL**
	310	109	1 350	2 150	221 000	2 010	1 240	28,9	**24040-BE-XL-K30**
	340	112	1 610	2 270	193 000	2 040	1 230	41,5	**23140-BE-XL**
	340	112	1 610	2 270	193 000	2 040	1 230	40,9	**23140-BE-XL-K**
	340	140	1 880	2 800	260 000	1 780	840	49,5	**24140-BE-XL**
	340	140	1 880	2 800	260 000	1 780	840	48,5	**24140-BE-XL-K30**
	360	98	1 520	1 990	180 000	2 330	1 510	43,3	**22240-BE-XL**
	360	98	1 520	1 990	180 000	2 330	1 510	42,3	**22240-BE-XL-K**
	360	128	1 940	2 700	226 000	1 870	1 000	59	**23240-BE-XL**
	360	128	1 940	2 700	226 000	1 870	1 000	57,3	**23240-BE-XL-K**
	420	138	2 440	2 950	232 000	1 830	1 080	89,4	**22340-BE-XL**
	420	138	2 440	2 950	232 000	1 830	1 080	87,4	**22340-BE-XL-K**

medias *https://www.schaeffler.de/std/1F9A*

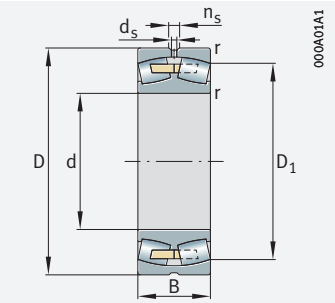

Solid cage, brass or steel; cylindrical bore

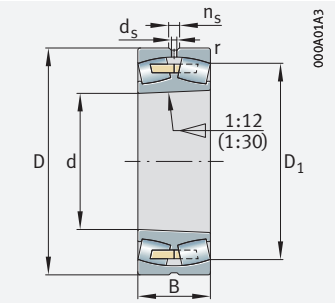

Solid cage, brass or steel; tapered bore

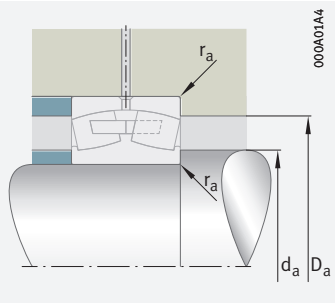

Mounting dimensions

Dimensions						Mounting dimensions			Calculation factors			
d	r min.	D_1 ≈	d_2 ≈	d_s	n_s	d_a min.	D_a max.	r_a max.	e	Y_1	Y_2	Y_0
200	2,1	256,9	–	6,3	12,2	210,2	269,8	2,1	0,2	3,42	5,09	3,34
	2,1	256,9	–	6,3	12,2	210,2	269,8	2,1	0,2	3,42	5,09	3,34
	2,1	281,6	223,4	8	15	210,2	299,8	2,1	0,23	2,9	4,31	2,83
	2,1	281,6	223,4	8	15	210,2	299,8	2,1	0,23	2,9	4,31	2,83
	2,1	281,6	–	8	15	210,2	299,8	2,1	0,23	2,9	4,31	2,83
	2,1	281,6	–	8	15	210,2	299,8	2,1	0,23	2,9	4,31	2,83
	2,1	271,6	223,6	6,3	12,2	210,2	299,8	2,1	0,32	2,13	3,17	2,08
	2,1	271,6	223,6	6,3	12,2	210,2	299,8	2,1	0,32	2,13	3,17	2,08
	3	295,8	230,4	9,5	17,7	214	326	2,5	0,32	2,1	3,13	2,06
	3	295,8	230,4	9,5	17,7	214	326	2,5	0,32	2,1	3,13	2,06
	3	287,9	227,1	6,3	12,2	214	326	2,5	0,39	1,71	2,54	1,67
	3	287,9	227,1	6,3	12,2	214	326	2,5	0,39	1,71	2,54	1,67
	4	310,9	238,2	9,5	17,7	217	343	3	0,26	2,57	3,83	2,52
	4	310,9	238,2	9,5	17,7	217	343	3	0,26	2,57	3,83	2,52
	4	305,3	235	9,5	17,7	217	343	3	0,35	1,95	2,9	1,91
	4	305,3	235	9,5	17,7	217	343	3	0,35	1,95	2,9	1,91
	5	355,1	248,8	12,5	23,5	220	400	4	0,34	1,98	2,94	1,93
	5	355,1	248,8	12,5	23,5	220	400	4	0,34	1,98	2,94	1,93

Spherical roller bearings

With cylindrical or tapered bore

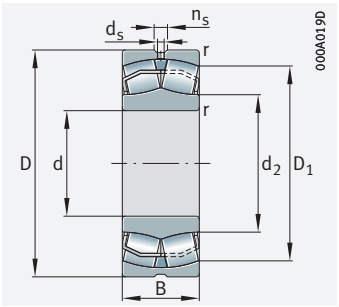

Cylindrical bore

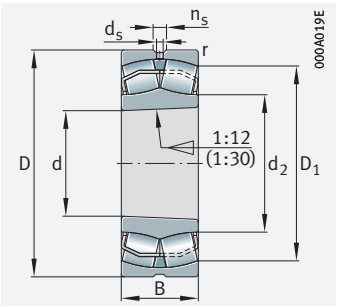

Tapered bore

d = 220 – 240 mm

Main dimensions			Basic load ratings		Fatigue limit load	Limiting speed	Speed rating	Mass	Designation
d	D	B	dyn. C_r	stat. C_{0r}	C_{ur}	n_G	$n_{\vartheta r}$	m	➤*695*|*1.12* ➤*696*|*1.13* X-life ➤*684*
			kN	kN	N	min^{-1}	min^{-1}	≈ kg	
220	300	60	610	1 240	74 000	2 600	1 460	12,3	**23944-S-K-MB**
	300	60	610	1 240	74 000	2 600	1 460	12,3	**23944-S-MB**
	340	90	1 260	1 900	182 000	2 230	1 450	29,4	**23044-BE-XL**
	340	90	1 260	1 900	182 000	2 230	1 450	28,5	**23044-BE-XL-K**
	340	118	1 620	2 600	260 000	1 830	1 090	39,3	**24044-BE-XL**
	340	118	1 620	2 600	260 000	1 830	1 090	37,7	**24044-BE-XL-K30**
	370	120	1 860	2 700	223 000	1 860	1 080	52,2	**23144-BE-XL**
	370	120	1 860	2 700	223 000	1 860	1 080	50,5	**23144-BE-XL-K**
	370	150	2 190	3 250	300 000	1 650	750	64	**24144-BE-XL**
	370	150	2 190	3 250	300 000	1 650	750	62,7	**24144-BE-XL-K30**
	400	108	1 840	2 360	216 000	2 140	1 350	59,6	**22244-BE-XL**
	400	108	1 840	2 360	216 000	2 140	1 350	58,3	**22244-BE-XL-K**
	400	144	2 380	3 300	270 000	1 700	880	77,7	**23244-BE-XL**
	400	144	2 380	3 300	270 000	1 700	880	75,3	**23244-BE-XL-K**
	460	145	2 800	3 400	270 000	1 690	950	117	**22344-BE-XL**
	460	145	2 800	3 400	270 000	1 690	950	114	**22344-BE-XL-K**
240	320	60	640	1 370	96 000	2 440	1 310	13,4	**23948-K-MB**
	320	60	640	1 370	96 000	2 440	1 310	13,9	**23948-MB**
	360	92	1 350	2 120	200 000	2 080	1 310	32,6	**23048-BE-XL**
	360	92	1 350	2 120	200 000	2 080	1 310	31,6	**23048-BE-XL-K**
	360	118	1 670	2 850	280 000	1 710	980	44,1	**24048-BE-XL**
	360	118	1 670	2 850	280 000	1 710	980	42,3	**24048-BE-XL-K30**
	400	128	2 130	3 150	255 000	1 700	970	64	**23148-BE-XL**
	400	128	2 130	3 150	255 000	1 700	970	62	**23148-BE-XL-K**
	400	160	2 600	3 900	340 000	1 470	650	83,2	**24148-BE-XL**
	400	160	2 600	3 900	340 000	1 470	650	81,5	**24148-BE-XL-K30**
	440	120	2 230	2 900	255 000	1 900	1 200	83,6	**22248-BE-XL**
	440	120	2 230	2 900	255 000	1 900	1 200	81,8	**22248-BE-XL-K**
	440	160	2 850	4 000	315 000	1 500	770	106	**23248-BE-XL**
	440	160	2 850	4 000	315 000	1 500	770	102	**23248-BE-XL-K**
	500	155	3 200	4 050	315 000	1 510	830	151	**22348-BEA-XL-MB1**
	500	155	3 200	4 050	315 000	1 510	830	148	**22348-BEA-XL-K-MB1**

medias *https://www.schaeffler.de/std/1F9A*

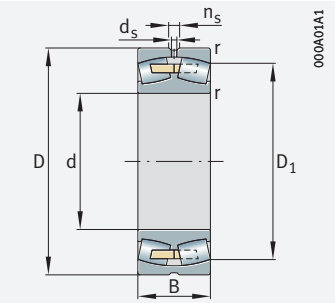

Solid cage, brass or steel; cylindrical bore

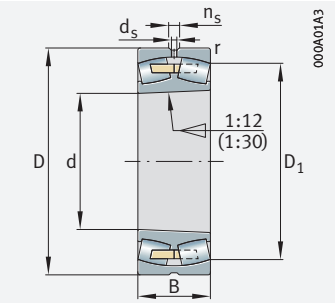

Solid cage, brass or steel; tapered bore

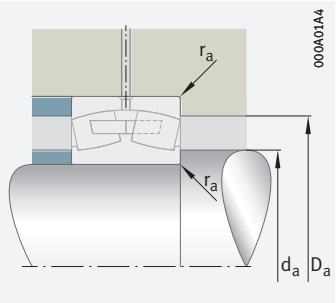

Mounting dimensions

Dimensions						Mounting dimensions			Calculation factors			
d	r	D_1	d_2	d_s	n_s	d_a	D_a	r_a	e	Y_1	Y_2	Y_0
	min.	≈	≈			min.	max.	max.				
220	2,1	277,4	–	6,3	12,2	230,2	289,8	2,1	0,18	3,76	5,59	3,67
	2,1	277,4	–	6,3	12,2	230,2	289,8	2,1	0,18	3,76	5,59	3,67
	3	304,5	248,8	8	15	232,4	327,6	2,5	0,24	2,81	4,19	2,75
	3	304,5	248,8	8	15	232,4	327,6	2,5	0,24	2,81	4,19	2,75
	3	295,7	245	6,3	12,2	232,4	327,6	2,5	0,32	2,1	3,13	2,06
	3	295,7	245	6,3	12,2	232,4	327,6	2,5	0,32	2,1	3,13	2,06
	4	323	254,8	9,5	17,7	237	353	3	0,31	2,15	3,2	2,1
	4	323	254,8	9,5	17,7	237	353	3	0,31	2,15	3,2	2,1
	4	314,3	247,6	6,3	12,2	237	353	3	0,39	1,74	2,59	1,7
	4	314,3	247,6	6,3	12,2	237	353	3	0,39	1,74	2,59	1,7
	4	346,6	260,1	9,5	17,7	237	383	3	0,26	2,57	3,83	2,52
	4	346,6	260,1	9,5	17,7	237	383	3	0,26	2,57	3,83	2,52
	4	338	255,8	9,5	17,7	237	383	3	0,36	1,9	2,83	1,86
	4	338	255,8	9,5	17,7	237	383	3	0,36	1,9	2,83	1,86
	5	391,1	273,4	12,5	23,5	240	440	4	0,33	2,06	3,06	2,01
	5	391,1	273,4	12,5	23,5	240	440	4	0,33	2,06	3,06	2,01
240	2,1	297,8	–	6,3	12,2	250,2	309,8	2,1	0,17	4,05	6,04	3,96
	2,1	297,8	–	6,3	12,2	250,2	309,8	2,1	0,17	4,05	6,04	3,96
	3	324,6	269,5	8	15	252,4	347,6	2,5	0,23	2,98	4,44	2,92
	3	324,6	269,5	8	15	252,4	347,6	2,5	0,23	2,98	4,44	2,92
	3	317,2	268,5	6,3	12,2	252,4	347,6	2,5	0,3	2,28	3,39	2,23
	3	317,2	268,5	6,3	12,2	252,4	347,6	2,5	0,3	2,28	3,39	2,23
	4	349,9	275,9	9,5	17,7	257	383	3	0,31	2,18	3,24	2,13
	4	349,9	275,9	9,5	17,7	257	383	3	0,31	2,18	3,24	2,13
	4	339	267,3	6,3	12,2	257	383	3	0,39	1,71	2,54	1,67
	4	339	267,3	6,3	12,2	257	383	3	0,39	1,71	2,54	1,67
	4	380,4	285,6	12,5	23,5	257	423	3	0,26	2,55	3,8	2,5
	4	380,4	285,6	12,5	23,5	257	423	3	0,26	2,55	3,8	2,5
	4	370,8	280,8	12,5	23,5	257	423	3	0,36	1,87	2,79	1,83
	4	370,8	280,8	12,5	23,5	257	423	3	0,36	1,87	2,79	1,83
	5	426,4	–	12,5	23,5	260	480	4	0,32	2,12	3,15	2,07
	5	426,4	–	12,5	23,5	260	480	4	0,32	2,12	3,15	2,07

Spherical roller bearings

With cylindrical or tapered bore

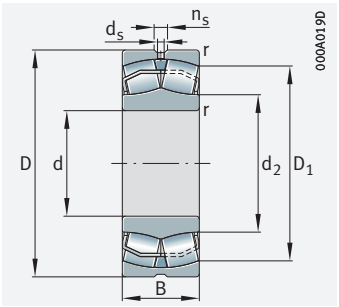

Cylindrical bore

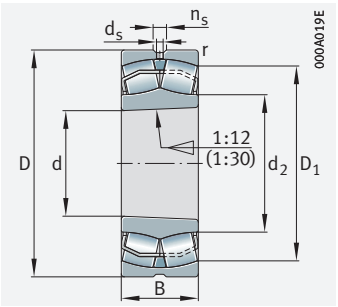

Tapered bore

d = 260 – 280 mm

Main dimensions			Basic load ratings		Fatigue limit load	Limiting speed	Speed rating	Mass	Designation
d	D	B	dyn. C_r	stat. C_{0r}	C_{ur}	n_G	$n_{\vartheta r}$	m	➤*695*|*1.12* ➤*696*|*1.13* X-life ➤*684*
			kN	kN	N	min^{-1}	min^{-1}	≈ kg	
260	360	75	940	1 940	111 000	2 100	1 190	22,4	**23952-K-MB**
	360	75	940	1 940	111 000	2 100	1 190	24,1	**23952-MB**
	400	104	1 670	2 600	239 000	1 850	1 170	47,4	**23052-BE-XL**
	400	104	1 670	2 600	239 000	1 850	1 170	45,9	**23052-BE-XL-K**
	400	140	2 210	3 650	345 000	1 510	880	63,8	**24052-BE-XL**
	400	140	2 210	3 650	345 000	1 510	880	61,2	**24052-BE-XL-K30**
	440	144	2 600	3 900	310 000	1 500	860	90	**23152-BE-XL**
	440	144	2 600	3 900	310 000	1 500	860	87,2	**23152-BE-XL-K**
	440	180	3 150	4 900	400 000	1 290	560	110	**24152-BE-XL**
	440	180	3 150	4 900	400 000	1 290	560	108	**24152-BE-XL-K30**
	480	130	2 600	3 450	295 000	1 720	1 070	104	**22252-BEA-XL-K-MB1**
	480	130	2 600	3 450	295 000	1 720	1 070	106	**22252-BEA-XL-MB1**
	480	174	3 350	4 750	370 000	1 360	690	134	**23252-BEA-XL-K-MB1**
	480	174	3 350	4 750	370 000	1 360	690	139	**23252-BEA-XL-MB1**
	540	165	3 650	4 650	360 000	1 390	740	179	**22352-BEA-XL-K-MB1**
	540	165	3 650	4 650	360 000	1 390	740	182	**22352-BEA-XL-MB1**
280	380	75	970	2 040	133 000	2 000	1 100	24,7	**23956-K-MB**
	380	75	970	2 040	133 000	2 000	1 100	25,5	**23956-MB**
	420	106	1 780	2 850	260 000	1 740	1 090	50,9	**23056-BE-XL**
	420	106	1 780	2 850	260 000	1 740	1 090	49,3	**23056-BE-XL-K**
	420	140	2 290	3 950	370 000	1 420	800	70,6	**24056-BE-XL**
	420	140	2 290	3 950	370 000	1 420	800	67,8	**24056-BE-XL-K30**
	460	146	2 750	4 200	325 000	1 420	790	96,3	**23156-BE-XL**
	460	146	2 750	4 200	325 000	1 420	790	93,1	**23156-BE-XL-K**
	460	180	3 300	5 200	435 000	1 230	520	116	**24156-BE-XL**
	460	180	3 300	5 200	435 000	1 230	520	114	**24156-BE-XL-K30**
	500	130	2 750	3 700	320 000	1 650	990	109	**22256-BEA-XL-K-MB1**
	500	130	2 750	3 700	320 000	1 650	990	112	**22256-BEA-XL-MB1**
	500	176	3 550	5 200	395 000	1 280	630	143,7	**23256-BEA-XL-K-MB1**
	500	176	3 550	5 200	395 000	1 280	630	148	**23256-BEA-XL-MB1**
	580	175	4 150	5 300	405 000	1 280	670	223	**22356-BEA-XL-K-MB1**
	580	175	4 150	5 300	405 000	1 280	670	228	**22356-BEA-XL-MB1**

medias *https://www.schaeffler.de/std/1F9A*

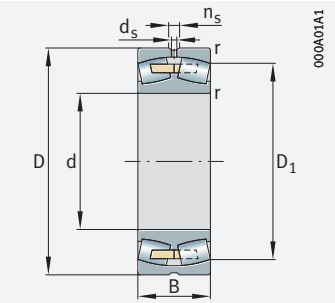

Solid cage, brass or steel; cylindrical bore

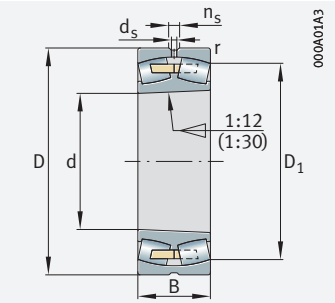

Solid cage, brass or steel; tapered bore

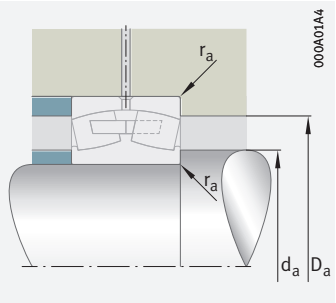

Mounting dimensions

Dimensions						Mounting dimensions			Calculation factors			
d	r min.	D_1 ≈	d_2 ≈	d_s	n_s	d_a min.	D_a max.	r_a max.	e	Y_1	Y_2	Y_0
260	2,1	330,5	–	8	15	270,2	349,8	2,1	0,19	3,54	5,27	3,46
	2,1	330,5	–	8	15	270,2	349,8	2,1	0,19	3,54	5,27	3,46
	4	358,7	295,5	9,5	17,7	274,6	385,4	3	0,23	2,9	4,31	2,83
	4	358,7	295,5	9,5	17,7	274,6	385,4	3	0,23	2,9	4,31	2,83
	4	349	288,3	6,3	12,2	274,6	385,4	3	0,32	2,09	3,11	2,04
	4	349	288,3	6,3	12,2	274,6	385,4	3	0,32	2,09	3,11	2,04
	4	382,7	301,7	9,5	17,7	277	423	3	0,32	2,12	3,15	2,07
	4	382,7	301,7	9,5	17,7	277	423	3	0,32	2,12	3,15	2,07
	4	370,6	292,2	8	15	277	423	3	0,4	1,67	2,49	1,63
	4	370,6	292,2	8	15	277	423	3	0,4	1,67	2,49	1,63
	5	415,1	–	12,5	23,5	280	460	4	0,26	2,57	3,83	2,52
	5	415,1	–	12,5	23,5	280	460	4	0,26	2,57	3,83	2,52
	5	404,3	–	12,5	23,5	280	460	4	0,36	1,87	2,79	1,83
	5	404,3	–	12,5	23,5	280	460	4	0,36	1,87	2,79	1,83
	6	460,6	–	12,5	23,5	286	514	5	0,31	2,15	3,2	2,1
	6	460,6	–	12,5	23,5	286	514	5	0,31	2,15	3,2	2,1
280	2,1	350	–	8	15	290,2	369,8	2,1	0,18	3,76	5,59	3,67
	2,1	350	–	8	15	290,2	369,8	2,1	0,18	3,76	5,59	3,67
	4	379,2	314,3	9,5	17,7	294,6	405,4	3	0,22	3,01	4,48	2,94
	4	379,2	314,3	9,5	17,7	294,6	405,4	3	0,22	3,01	4,48	2,94
	4	370,5	310,3	6,3	12,2	294,6	405,4	3	0,3	2,23	3,32	2,18
	4	370,5	310,3	6,3	12,2	294,6	405,4	3	0,3	2,23	3,32	2,18
	5	403,4	321,4	9,5	17,7	300	440	4	0,31	2,21	3,29	2,16
	5	403,4	321,4	9,5	17,7	300	440	4	0,31	2,21	3,29	2,16
	5	392,4	312,8	8	15	300	440	4	0,38	1,76	2,62	1,72
	5	392,4	312,8	8	15	300	440	4	0,38	1,76	2,62	1,72
	5	436	–	12,5	23,5	300	480	4	0,25	2,71	4,04	2,65
	5	436	–	12,5	23,5	300	480	4	0,25	2,71	4,04	2,65
	5	425,4	–	12,5	23,5	300	480	4	0,34	1,96	2,92	1,92
	5	425,4	–	12,5	23,5	300	480	4	0,34	1,96	2,92	1,92
	6	495,5	–	12,5	23,5	306	554	5	0,31	2,18	3,24	2,13
	6	495,5	–	12,5	23,5	306	554	5	0,31	2,18	3,24	2,13

Spherical roller bearings

With cylindrical or tapered bore

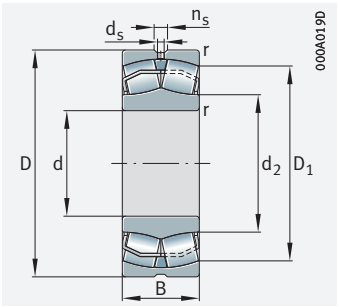

Cylindrical bore

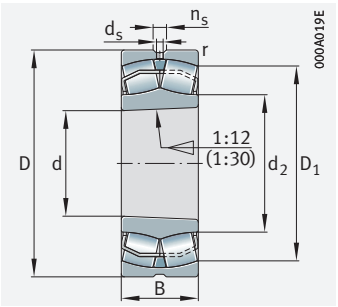

Tapered bore

d = 300 – 320 mm

Main dimensions			Basic load ratings		Fatigue limit load	Limiting speed	Speed rating	Mass	Designation
d	D	B	dyn. C_r	stat. C_{0r}	C_{ur}	n_G	$n_{\vartheta r}$	m	➤695 | 1.12 ➤696 | 1.13 X-life ➤684
			kN	kN	N	min^{-1}	min^{-1}	≈ kg	
300	420	90	1 270	2 650	170 000	1 780	1 000	39,1	**23960-B-K-MB**
	420	90	1 270	2 650	170 000	1 780	1 000	40,6	**23960-B-MB**
	460	118	2 160	3 450	305 000	1 570	980	70,5	**23060-BE-XL**
	460	118	2 160	3 450	305 000	1 570	980	68,4	**23060-BE-XL-K**
	460	160	2 850	4 900	435 000	1 250	720	101	**24060-BE-XL**
	460	160	2 850	4 900	435 000	1 250	720	97	**24060-BE-XL-K30**
	500	160	3 250	4 950	375 000	1 300	720	126	**23160-BEA-XL-K-MB1**
	500	160	3 250	4 950	375 000	1 300	720	130	**23160-BEA-XL-MB1**
	500	200	3 950	6 400	500 000	1 100	450	164	**24160-BE-XL**
	500	200	3 950	6 400	500 000	1 100	450	161	**24160-BE-XL-K30**
	540	140	3 100	4 250	360 000	1 500	900	139	**22260-BEA-XL-K-MB1**
	540	140	3 100	4 250	360 000	1 500	900	142	**22260-BEA-XL-MB1**
	540	192	4 100	6 100	450 000	1 160	560	187	**23260-BEA-XL-K-MB1**
	540	192	4 100	6 100	450 000	1 160	560	193	**23260-BEA-XL-MB1**
	620	185	4 650	6 000	450 000	1 190	610	270,4	**22360-BEA-XL-MB1**
	620	185	4 650	6 000	450 000	1 190	610	263,6	**22360-BEA-XL-K-MB1**
320	440	90	1 310	2 750	206 000	1 700	930	41	**23964-K-MB**
	440	90	1 310	2 750	206 000	1 700	930	41,8	**23964-MB**
	480	121	2 300	3 750	330 000	1 480	920	75,6	**23064-BEA-XL-K-MB1**
	480	121	2 300	3 750	330 000	1 480	920	78	**23064-BEA-XL-MB1**
	480	160	2 950	5 200	465 000	1 200	670	99	**24064-BEA-XL-K30-MB1**
	480	160	2 950	5 200	465 000	1 200	670	102	**24064-BEA-XL-MB1**
	540	176	3 800	5 900	425 000	1 170	650	161	**23164-BEA-XL-K-MB1**
	540	176	3 800	5 900	425 000	1 170	650	165	**23164-BEA-XL-MB1**
	540	218	4 600	7 300	570 000	1 010	415	209	**24164-BE-XL**
	540	218	4 600	7 300	570 000	1 010	415	205	**24164-BE-XL-K30**
	580	150	3 550	4 700	405 000	1 410	850	171	**22264-BEA-XL-K-MB1**
	580	150	3 550	4 700	405 000	1 410	850	174	**22264-BEA-XL-MB1**
	580	208	4 650	7 000	510 000	1 060	510	229,6	**23264-BEA-XL-K-MB1**
	580	208	4 650	7 000	510 000	1 060	510	237	**23264-BEA-XL-MB1**

medias *https://www.schaeffler.de/std/1F9A*

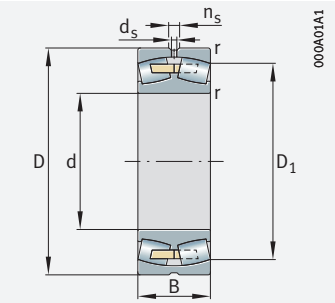

Solid cage, brass or steel; cylindrical bore

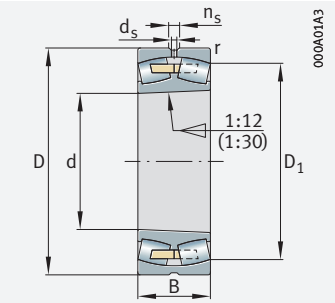

Solid cage, brass or steel; tapered bore

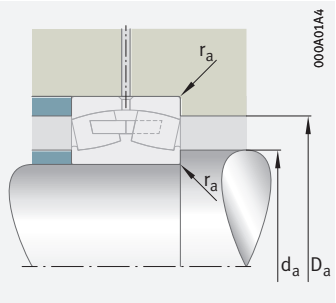

Mounting dimensions

Dimensions						Mounting dimensions			Calculation factors			
d	r min.	D_1 ≈	d_2 ≈	d_s	n_s	d_a min.	D_a max.	r_a max.	e	Y_1	Y_2	Y_0
300	3	384,6	–	9,5	17,7	312,4	407,6	2,5	0,2	3,42	5,09	3,34
	3	384,6	–	9,5	17,7	312,4	407,6	2,5	0,2	3,42	5,09	3,34
	4	413	340	9,5	17,7	314,6	445,4	3	0,23	2,92	4,35	2,86
	4	413	340	9,5	17,7	314,6	445,4	3	0,23	2,92	4,35	2,86
	4	403	334,8	8	15	314,6	445,4	3	0,32	2,12	3,15	2,07
	4	403	334,8	8	15	314,6	445,4	3	0,32	2,12	3,15	2,07
	5	436,8	–	9,5	17,7	320	480	4	0,31	2,18	3,24	2,13
	5	436,8	–	9,5	17,7	320	480	4	0,31	2,18	3,24	2,13
	5	422,8	338,2	8	15	320	480	4	0,39	1,72	2,56	1,68
	5	422,8	338,2	8	15	320	480	4	0,39	1,72	2,56	1,68
	5	470,5	–	12,5	23,5	320	520	4	0,25	2,71	4,04	2,65
	5	470,5	–	12,5	23,5	320	520	4	0,25	2,71	4,04	2,65
	5	458	–	12,5	23,5	320	520	4	0,35	1,92	2,86	1,88
	5	458	–	12,5	23,5	320	520	4	0,35	1,92	2,86	1,88
	7,5	530,3	–	12,5	23,5	332	588	6	0,31	2,21	3,29	2,16
	7,5	530,3	–	12,5	23,5	332	588	6	0,31	2,21	3,29	2,16
320	3	406,2	–	9,5	17,7	332,4	427,6	2,5	0,19	3,62	5,39	3,54
	3	406,2	–	9,5	17,7	332,4	427,6	2,5	0,19	3,62	5,39	3,54
	4	433	–	9,5	17,7	334,6	465,4	3	0,22	3,01	4,48	2,94
	4	433	–	9,5	17,7	334,6	465,4	3	0,22	3,01	4,48	2,94
	4	422,3	–	8	15	334,6	465,4	3	0,3	2,23	3,32	2,18
	4	422,3	–	8	15	334,6	465,4	3	0,3	2,23	3,32	2,18
	5	469,3	–	12,5	23,5	340	520	4	0,32	2,13	3,17	2,08
	5	469,3	–	12,5	23,5	340	520	4	0,32	2,13	3,17	2,08
	5	455,5	359	9,5	17,7	340	520	4	0,4	1,69	2,52	1,65
	5	455,5	359	9,5	17,7	340	520	4	0,4	1,69	2,52	1,65
	5	505,1	–	12,5	23,5	340	560	4	0,25	2,71	4,04	2,65
	5	505,1	–	12,5	23,5	340	560	4	0,25	2,71	4,04	2,65
	5	490,4	–	12,5	23,5	340	560	4	0,35	1,91	2,85	1,87
	5	490,4	–	12,5	23,5	340	560	4	0,35	1,91	2,85	1,87

Spherical roller bearings

With cylindrical or tapered bore

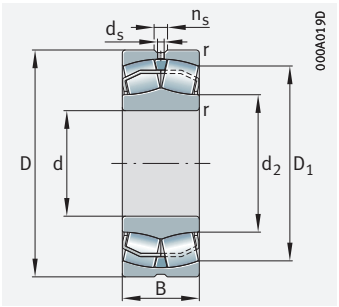

Cylindrical bore

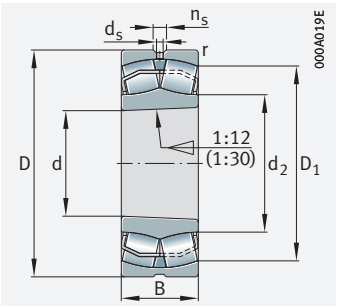

Tapered bore

d = 340 – 360 mm

Main dimensions			Basic load ratings		Fatigue limit load	Limiting speed	Speed rating	Mass	Designation
d	D	B	dyn. C_r	stat. C_{0r}	C_{ur}	n_G	$n_{\vartheta r}$	m	➤*695* | *1.12* ➤*696* | *1.13* X-life ➤*684*
			kN	kN	N	min^{-1}	min^{-1}	≈ kg	
340	460	90	1 370	3 000	204 000	1 610	860	42,9	**23968-K-MB**
	460	90	1 370	3 000	204 000	1 610	860	43,7	**23968-MB**
	520	133	2 700	4 400	375 000	1 360	840	101	**23068-BEA-XL-K-MB1**
	520	133	2 700	4 400	375 000	1 360	840	104	**23068-BEA-XL-MB1**
	520	180	3 550	6 200	530 000	1 080	610	136	**24068-BEA-XL-K30-MB1**
	520	180	3 550	6 200	530 000	1 080	610	139	**24068-BEA-XL-MB1**
	580	190	4 350	6 600	480 000	1 090	600	204	**23168-BEA-XL-K-MB1**
	580	190	4 350	6 600	480 000	1 090	600	210	**23168-BEA-XL-MB1**
	580	243	5 400	8 800	640 000	900	370	267	**24168-BE-XL**
	580	243	5 400	8 800	640 000	900	370	263	**24168-BE-XL-K30**
	620	165	4 100	5 600	460 000	1 280	770	217	**22268-BEA-XL-K-MB1**
	620	165	4 100	5 600	460 000	1 280	770	221	**22268-BEA-XL-MB1**
	620	224	5 300	7 900	580 000	1 000	475	292	**23268-BEA-XL-K-MB1**
	620	224	5 300	7 900	580 000	1 000	475	301	**23268-BEA-XL-MB1**
	710	212	6 000	8 000	570 000	1 010	500	407,9	**22368-BEA-XL-MB1**
	710	212	6 000	8 000	570 000	1 010	500	403	**22368-BEA-XL-K-MB1**
360	480	90	1 440	3 200	216 000	1 540	800	45	**23972-K-MB**
	480	90	1 440	3 200	216 000	1 540	800	46,5	**23972-MB**
	540	134	2 800	4 650	400 000	1 300	790	108	**23072-BEA-XL-MB1**
	540	134	2 800	4 650	400 000	1 300	790	104	**23072-BEA-XL-K-MB1**
	540	180	3 650	6 600	570 000	1 040	570	144	**24072-BEA-XL-MB1**
	540	180	3 650	6 600	570 000	1 040	570	141	**24072-BEA-XL-K30-MB1**
	600	192	4 550	7 100	510 000	1 040	560	222	**23172-BEA-XL-MB1**
	600	192	4 550	7 100	510 000	1 040	560	215	**23172-BEA-XL-K-MB1**
	600	243	5 600	9 100	680 000	890	350	277	**24172-BE-XL**
	600	243	5 600	9 100	680 000	890	350	272	**24172-BE-XL-K30**
	650	170	4 450	6 200	500 000	1 190	710	245	**22272-BEA-XL-K-MB1**
	650	170	4 450	6 200	500 000	1 190	710	251	**22272-BEA-XL-MB1**
	650	232	5 700	8 900	630 000	930	430	341	**23272-BEA-XL-MB1**
	650	232	5 700	8 900	630 000	930	430	330,5	**23272-BEA-XL-K-MB1**
	750	224	6 600	8 800	620 000	710	470	476	**22372-BEA-XL-K-MB1**
	750	224	6 600	8 800	620 000	710	470	479	**22372-BEA-XL-MB1**

medias *https://www.schaeffler.de/std/1F9A*

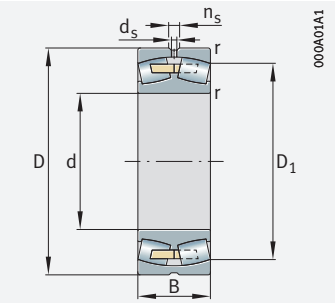

Solid cage, brass or steel; cylindrical bore

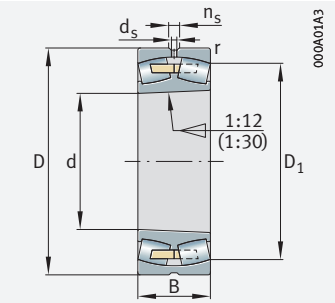

Solid cage, brass or steel; tapered bore

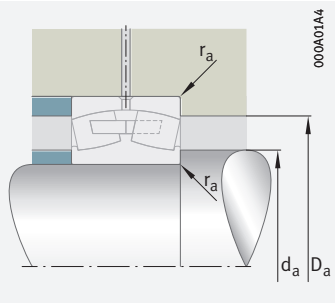

Mounting dimensions

Dimensions						Mounting dimensions			Calculation factors			
d	r min.	D_1 ≈	d_2 ≈	d_s	n_s	d_a min.	D_a max.	r_a max.	e	Y_1	Y_2	Y_0
340	3	426,7	–	9,5	17,7	352,4	447,6	2,5	0,18	3,85	5,73	3,76
	3	426,7	–	9,5	17,7	352,4	447,6	2,5	0,18	3,85	5,73	3,76
	5	467,1	–	12,5	23,5	358	502	4	0,23	2,92	4,35	2,86
	5	467,1	–	12,5	23,5	358	502	4	0,23	2,92	4,35	2,86
	5	456,1	–	9,5	17,7	358	502	4	0,32	2,12	3,15	2,07
	5	456,1	–	9,5	17,7	358	502	4	0,32	2,12	3,15	2,07
	5	502,6	–	12,5	23,5	360	560	4	0,32	2,1	3,13	2,06
	5	502,6	–	12,5	23,5	360	560	4	0,32	2,1	3,13	2,06
	5	484,1	382,8	9,5	17,7	360	560	4	0,42	1,62	2,42	1,59
	5	484,1	382,8	9,5	17,7	360	560	4	0,42	1,62	2,42	1,59
	6	538,7	–	12,5	23,5	366	594	5	0,26	2,62	3,9	2,56
	6	538,7	–	12,5	23,5	366	594	5	0,26	2,62	3,9	2,56
	6	523,5	–	12,5	23,5	366	594	5	0,36	1,85	2,76	1,81
	6	523,5	–	12,5	23,5	366	594	5	0,36	1,85	2,76	1,81
	7,5	605,95	–	12,5	23,5	372	678	6	0,31	2,2	3,27	2,15
	7,5	605,95	–	12,5	23,5	372	678	6	0,31	2,2	3,27	2,15
360	3	447,1	–	9,5	17,7	372,4	467,6	2,5	0,17	4,05	6,04	3,96
	3	447,1	–	9,5	17,7	372,4	467,6	2,5	0,17	4,05	6,04	3,96
	5	487,6	–	12,5	23,5	378	522	4	0,22	3,04	4,53	2,97
	5	487,6	–	12,5	23,5	378	522	4	0,22	3,04	4,53	2,97
	5	476,4	–	9,5	17,7	378	522	4	0,3	2,23	3,32	2,18
	5	476,4	–	9,5	17,7	378	522	4	0,3	2,23	3,32	2,18
	5	523,3	–	12,5	23,5	380	580	4	0,31	2,18	3,24	2,13
	5	523,3	–	12,5	23,5	380	580	4	0,31	2,18	3,24	2,13
	5	505,9	399,4	9,5	17,7	380	580	4	0,4	1,69	2,52	1,65
	5	505,9	399,4	9,5	17,7	380	580	4	0,4	1,69	2,52	1,65
	6	566,4	–	12,5	23,5	386	624	5	0,25	2,69	4	2,63
	6	566,4	–	12,5	23,5	386	624	5	0,25	2,69	4	2,63
	6	550,8	–	12,5	23,5	386	624	5	0,36	1,9	2,83	1,86
	6	550,8	–	12,5	23,5	386	624	5	0,36	1,9	2,83	1,86
	7,5	640	–	12,5	23,5	392	718	6	0,31	2,2	3,27	2,15
	7,5	640	–	12,5	23,5	392	718	6	0,31	2,2	3,27	2,15

Spherical roller bearings

With cylindrical or tapered bore

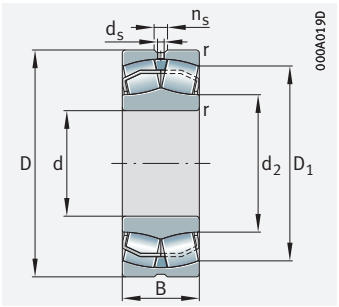

Cylindrical bore

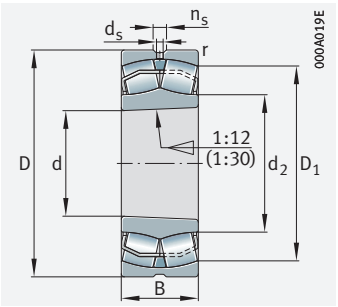

Tapered bore

d = 380 – 400 mm

Main dimensions			Basic load ratings		Fatigue limit load	Limiting speed	Speed rating	Mass	Designation
d	D	B	dyn. C_r	stat. C_{0r}	C_{ur}	n_G	$n_{\vartheta r}$	m	➤*695* | *1.12* ➤*696* | *1.13* X-life ➤*684*
			kN	kN	N	min^{-1}	min^{-1}	≈ kg	
380	520	106	1 780	4 000	270 000	1 340	750	66,3	**23976-K-MB**
	520	106	1 780	4 000	270 000	1 340	750	69,1	**23976-MB**
	560	135	2 900	5 000	420 000	1 230	740	114	**23076-BEA-XL-MB1**
	560	135	2 900	5 000	420 000	1 230	740	109	**23076-BEA-XL-K-MB1**
	560	180	3 750	7 000	590 000	990	530	153	**24076-BEA-XL-MB1**
	560	180	3 750	7 000	590 000	990	530	151	**24076-BEA-XL-K30-MB1**
	620	194	4 700	7 600	540 000	990	530	234	**23176-BEA-XL-MB1**
	620	194	4 700	7 600	540 000	990	530	227	**23176-BEA-XL-K-MB1**
	620	243	5 800	9 700	730 000	850	325	290	**24176-BE-XL**
	620	243	5 800	9 700	730 000	850	325	285	**24176-BE-XL-K30**
	680	240	6 200	9 600	680 000	890	400	385	**23276-BEA-XL-MB1**
	680	240	6 200	9 600	680 000	890	400	374	**23276-BEA-XL-K-MB1**
400	540	106	1 830	4 150	280 000	1 290	710	68,2	**23980-B-K-MB**
	540	106	1 830	4 150	280 000	1 290	710	72,9	**23980-B-MB**
	600	148	3 400	5 700	480 000	1 150	690	149	**23080-BEA-XL-MB1**
	600	148	3 400	5 700	480 000	1 150	690	144	**23080-BEA-XL-K-MB1**
	600	200	4 500	8 100	680 000	920	495	200	**24080-BEA-XL-MB1**
	600	200	4 500	8 100	680 000	920	495	196	**24080-BEA-XL-K30-MB1**
	650	200	5 000	8 100	590 000	950	495	255	**23180-BEA-XL-MB1**
	650	200	5 000	8 100	590 000	950	495	246	**23180-BEA-XL-K-MB1**
	650	250	6 200	10 600	790 000	800	300	328	**24180-BE-XL**
	650	250	6 200	10 600	790 000	800	300	323	**24180-BE-XL-K30**
	720	256	7 000	10 900	750 000	820	370	464	**23280-BEA-XL-MB1**
	720	256	7 000	10 900	750 000	820	370	450	**23280-BEA-XL-K-MB1**
	820	243	7 800	10 500	730 000	850	410	615,5	**22380-BEA-XL-MB1**
	820	243	7 800	10 500	730 000	850	410	605	**22380-BEA-XL-K-MB1**

medias *https://www.schaeffler.de/std/1F9A*

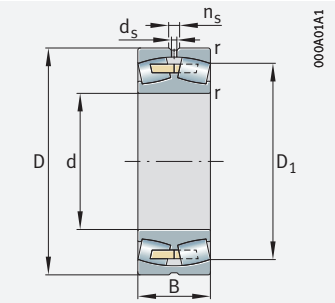

Solid cage, brass or steel; cylindrical bore

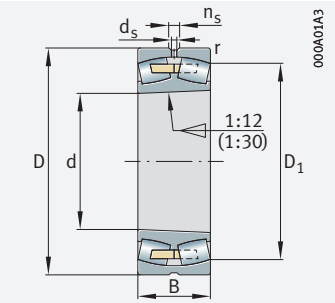

Solid cage, brass or steel; tapered bore

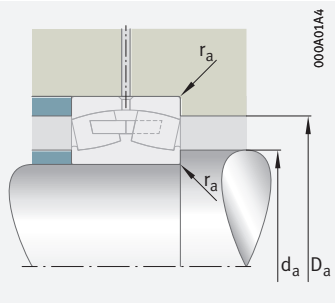

Mounting dimensions

Dimensions						Mounting dimensions			Calculation factors			
d	r min.	D_1 ≈	d_2 ≈	d_s	n_s	d_a min.	D_a max.	r_a max.	e	Y_1	Y_2	Y_0
380	4	477,6	–	9,5	17,7	394,6	505,4	3	0,19	3,58	5,33	3,5
	4	477,6	–	9,5	17,7	394,6	505,4	3	0,19	3,58	5,33	3,5
	5	508,1	–	12,5	23,5	398	542	4	0,21	3,17	4,72	3,1
	5	508,1	–	12,5	23,5	398	542	4	0,21	3,17	4,72	3,1
	5	497,9	–	9,5	17,7	398	542	4	0,29	2,33	3,47	2,28
	5	497,9	–	9,5	17,7	398	542	4	0,29	2,33	3,47	2,28
	5	543,6	–	12,5	23,5	400	600	4	0,3	2,25	3,34	2,2
	5	543,6	–	12,5	23,5	400	600	4	0,3	2,25	3,34	2,2
	5	528,4	421	9,5	17,7	400	600	4	0,38	1,76	2,62	1,72
	5	528,4	421	9,5	17,7	400	600	4	0,38	1,76	2,62	1,72
	6	578,1	–	12,5	23,5	406	654	5	0,35	1,92	2,86	1,88
	6	578,1	–	12,5	23,5	406	654	5	0,35	1,92	2,86	1,88
400	4	499	–	9,5	17,7	414,6	525,4	3	0,18	3,71	5,52	3,63
	4	499	–	9,5	17,7	414,6	525,4	3	0,18	3,71	5,52	3,63
	5	541,9	–	12,5	23,5	418	582	4	0,22	3,07	4,57	3
	5	541,9	–	12,5	23,5	418	582	4	0,22	3,07	4,57	3
	5	529,4	–	12,5	23,5	418	582	4	0,3	2,23	3,32	2,18
	5	529,4	–	12,5	23,5	418	582	4	0,3	2,23	3,32	2,18
	6	571,4	–	12,5	23,5	426	624	5	0,29	2,3	3,42	2,25
	6	571,4	–	12,5	23,5	426	624	5	0,29	2,3	3,42	2,25
	6	556,5	448,8	12,5	23,5	426	624	5	0,37	1,82	2,7	1,78
	6	556,5	448,8	12,5	23,5	426	624	5	0,37	1,82	2,7	1,78
	6	611,2	–	12,5	23,5	426	694	5	0,36	1,9	2,83	1,86
	6	611,2	–	12,5	23,5	426	694	5	0,36	1,9	2,83	1,86
	7,5	701,3	–	12,5	23,5	432	788	6	0,31	2,21	3,29	2,16
	7,5	701,3	–	12,5	23,5	432	788	6	0,31	2,21	3,29	2,16

Spherical roller bearings

With cylindrical or tapered bore

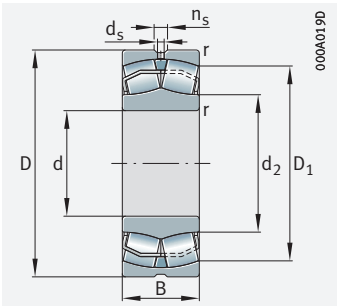

Cylindrical bore

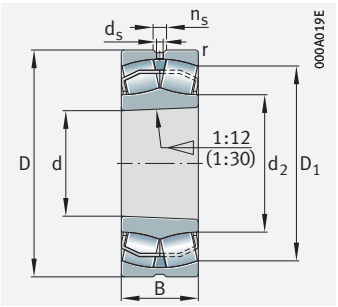

Tapered bore

d = 420 – 440 mm

Main dimensions			Basic load ratings		Fatigue limit load	Limiting speed	Speed rating	Mass	Designation
d	D	B	dyn. C_r	stat. C_{0r}	C_{ur}	n_G	$n_{\vartheta r}$	m	➤*695* | *1.12* ➤*696* | *1.13* X-life ➤*684*
			kN	kN	N	min^{-1}	min^{-1}	≈ kg	
420	560	106	1 910	4 450	310 000	1 230	660	72,1	**23984-K-MB**
	560	106	1 910	4 450	310 000	1 230	660	75,5	**23984-MB**
	620	150	3 650	6 300	520 000	1 090	650	153	**23084-BEA-XL-K-MB1**
	620	150	3 650	6 300	520 000	1 090	650	158	**23084-BEA-XL-MB1**
	620	200	4 600	8 500	720 000	890	465	205	**24084-BEA-XL-K30-MB1**
	620	200	4 600	8 500	720 000	890	465	208	**24084-BEA-XL-MB1**
	700	224	6 000	9 600	660 000	860	455	342	**23184-BEA-XL-K-MB1**
	700	224	6 000	9 600	660 000	860	455	353	**23184-BEA-XL-MB1**
	700	280	7 400	12 600	890 000	720	270	437	**24184-BE-XL**
	700	280	7 400	12 600	890 000	720	270	431	**24184-BE-XL-K30**
	760	272	7 800	12 300	820 000	770	340	537	**23284-BEA-XL-K-MB1**
	760	272	7 800	12 300	820 000	770	340	553	**23284-BEA-XL-MB1**
440	600	118	2 230	5 200	305 000	1 130	620	98,3	**23988-K-MB**
	600	118	2 230	5 200	305 000	1 130	620	101	**23988-MB**
	650	157	3 950	6 900	560 000	1 030	610	176	**23088-BEA-XL-K-MB1**
	650	157	3 950	6 900	560 000	1 030	610	182	**23088-BEA-XL-MB1**
	650	212	5 100	9 500	780 000	830	435	238	**24088-BEA-XL-K30-MB1**
	650	212	5 100	9 500	780 000	830	435	243	**24088-BEA-XL-MB1**
	720	226	6 200	10 200	700 000	820	430	358	**23188-BEA-XL-K-MB1**
	720	226	6 200	10 200	700 000	820	430	370	**23188-BEA-XL-MB1**
	720	280	7 600	12 900	940 000	710	260	453	**24188-BE-XL**
	720	280	7 600	12 900	940 000	710	260	446	**24188-BE-XL-K30**
	790	280	8 300	13 200	880 000	730	320	592	**23288-BEA-XL-K-MB1**
	790	280	8 300	13 200	880 000	730	320	610	**23288-BEA-XL-MB1**

medias *https://www.schaeffler.de/std/1F9A*

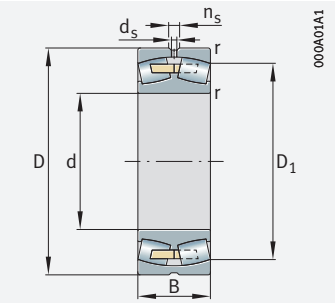

Solid cage, brass or steel; cylindrical bore

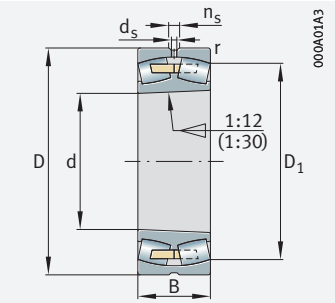

Solid cage, brass or steel; tapered bore

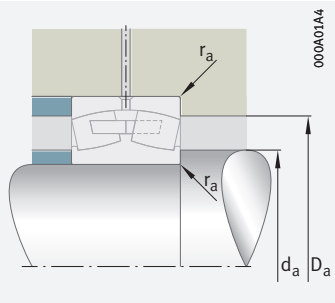

Mounting dimensions

Dimensions						Mounting dimensions			Calculation factors			
d	r min.	D_1 ≈	d_2 ≈	d_s	n_s	d_a min.	D_a max.	r_a max.	e	Y_1	Y_2	Y_0
420	4	519,5	–	9,5	17,7	434,6	545,4	3	0,18	3,85	5,73	3,76
	4	519,5	–	9,5	17,7	434,6	545,4	3	0,18	3,85	5,73	3,76
	5	560,7	–	12,5	23,5	438	602	4	0,21	3,17	4,72	3,1
	5	560,7	–	12,5	23,5	438	602	4	0,21	3,17	4,72	3,1
	5	529,4	–	12,5	23,5	438	602	4	0,29	2,32	3,45	2,26
	5	551	–	12,5	23,5	438	602	4	0,29	2,32	3,45	2,26
	6	609,8	–	12,5	23,5	446	674	5	0,31	2,18	3,24	2,13
	6	609,8	–	12,5	23,5	446	674	5	0,31	2,18	3,24	2,13
	6	592,2	472,7	12,5	23,5	446	674	5	0,39	1,72	2,56	1,68
	6	592,2	472,7	12,5	23,5	446	674	5	0,39	1,72	2,56	1,68
	7,5	643,4	–	12,5	23,5	452	728	6	0,36	1,89	2,81	1,84
	7,5	643,4	–	12,5	23,5	452	728	6	0,36	1,89	2,81	1,84
440	4	552,8	–	12,5	23,5	454,6	585,4	3	0,18	3,66	5,46	3,58
	4	552,8	–	12,5	23,5	454,6	585,4	3	0,18	3,66	5,46	3,58
	6	589,3	–	12,5	23,5	463	627	5	0,21	3,17	4,72	3,1
	6	589,3	–	12,5	23,5	463	627	5	0,21	3,17	4,72	3,1
	6	578,8	–	12,5	23,5	463	627	5	0,29	2,3	3,42	2,25
	6	578,8	–	12,5	23,5	463	627	5	0,29	2,3	3,42	2,25
	6	630,2	–	12,5	23,5	466	694	5	0,3	2,25	3,34	2,2
	6	630,2	–	12,5	23,5	466	694	5	0,3	2,25	3,34	2,2
	6	614,3	614,2	12,5	23,5	466	694	5	0,38	1,78	2,65	1,74
	6	614,3	614,2	12,5	23,5	466	694	5	0,38	1,78	2,65	1,74
	7,5	670,7	–	12,5	23,5	472	758	6	0,35	1,91	2,85	1,87
	7,5	670,7	–	12,5	23,5	472	758	6	0,35	1,91	2,85	1,87

Spherical roller bearings

With cylindrical or tapered bore

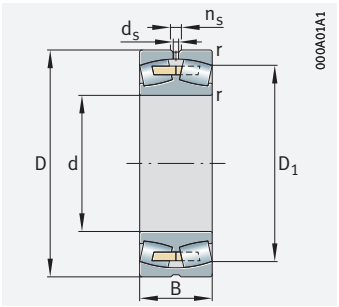

Solid cage, brass or steel; cylindrical bore

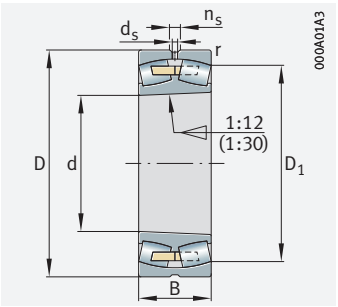

Solid cage, brass or steel; tapered bore

d = 460 – 480 mm

Main dimensions			Basic load ratings		Fatigue limit load	Limiting speed	Speed rating	Mass	Designation
d	D	B	dyn. C_r	stat. C_{0r}	C_{ur}	n_G	$n_{\vartheta r}$	m	➤*695* | *1.12* ➤*696* | *1.13* X-life ➤*684*
			kN	kN	N	min^{-1}	min^{-1}	≈ kg	
460	580	118	1 940	5 100	335 000	1 020	325	71	**24892-B-MB**
	620	118	2 270	5 400	380 000	1 080	590	103	**23992-B-K-MB**
	620	118	2 270	5 400	380 000	1 080	590	111	**23992-B-MB**
	680	163	4 300	7 500	610 000	980	580	201	**23092-BEA-XL-K-MB1**
	680	163	4 300	7 500	610 000	980	580	208	**23092-BEA-XL-MB1**
	680	218	5 500	10 200	840 000	800	410	270	**24092-BEA-XL-K30-MB1**
	680	218	5 500	10 200	840 000	800	410	274	**24092-BEA-XL-MB1**
	760	240	6 900	11 500	760 000	770	395	431	**23192-BEA-XL-K-MB1**
	760	240	6 900	11 500	760 000	770	395	445	**23192-BEA-XL-MB1**
	760	300	8 500	14 500	1 030 000	660	241	531	**24192-BEA-XL-K30-MB1**
	760	300	8 500	14 500	1 030 000	660	241	540	**24192-BEA-XL-MB1**
	830	296	9 200	14 700	960 000	690	295	695	**23292-BEA-XL-K-MB1**
	830	296	9 200	14 700	960 000	690	295	716	**23292-BEA-XL-MB1**
480	600	118	2 000	5 400	370 000	980	305	78,4	**24896-MB**
	650	128	2 550	6 000	470 000	1 040	570	121	**23996-B-K-MB**
	650	128	2 550	6 000	470 000	1 040	570	126	**23996-B-MB**
	700	165	4 450	8 000	640 000	950	550	210	**23096-BEA-XL-K-MB1**
	700	165	4 450	8 000	640 000	950	550	217	**23096-BEA-XL-MB1**
	700	218	5 600	10 700	890 000	770	385	279	**24096-BEA-XL-K30-MB1**
	700	218	5 600	10 700	880 000	770	385	284	**24096-BEA-XL-MB1**
	790	248	7 400	12 400	820 000	740	375	479	**23196-BEA-XL-K-MB1**
	790	248	7 400	12 400	820 000	740	375	494	**23196-BEA-XL-MB1**
	790	308	9 000	15 500	1 100 000	640	227	594	**24196-BEA-XL-K30-MB1**
	790	308	9 000	15 500	1 100 000	640	227	603	**24196-BEA-XL-MB1**
	870	310	10 000	16 200	1 040 000	650	275	804	**23296-BEA-XL-K-MB1**
	870	310	10 000	16 200	1 040 000	650	275	829	**23296-BEA-XL-MB1**

medias *https://www.schaeffler.de/std/1F9A*

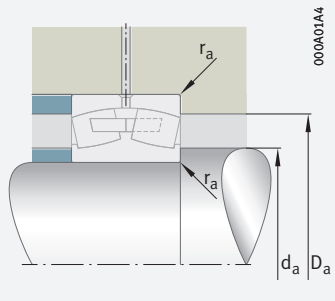

Mounting dimensions

Dimensions					Mounting dimensions			Calculation factors			
d	r min.	D_1 ≈	d_s	n_s	d_a min.	D_a max.	r_a max.	e	Y_1	Y_2	Y_0
460	3	–	6,3	12,2	472,4	567,6	2,5	0,18	3,76	5,59	3,67
	4	573,3	12,5	23,5	474,6	605,4	3	0,18	3,85	5,73	3,76
	4	573,3	12,5	23,5	474,6	605,4	3	0,18	3,85	5,73	3,76
	6	616,7	12,5	23,5	483	657	5	0,21	3,17	4,72	3,1
	6	616,7	12,5	23,5	483	657	5	0,21	3,17	4,72	3,1
	6	606,6	12,5	23,5	483	657	5	0,29	2,33	3,47	2,28
	6	606,6	12,5	23,5	483	657	5	0,29	2,33	3,47	2,28
	7,5	663,4	12,5	23,5	492	728	6	0,31	2,21	3,29	2,16
	7,5	663,4	12,5	23,5	492	728	6	0,31	2,21	3,29	2,16
	7,5	647,1	12,5	23,5	492	728	6	0,38	1,76	2,62	1,72
	7,5	647,1	12,5	23,5	492	728	6	0,38	1,76	2,62	1,72
	7,5	704,9	12,5	23,5	492	798	6	0,36	1,9	2,83	1,86
	7,5	704,9	12,5	23,5	492	798	6	0,36	1,9	2,83	1,86
480	3	–	6,3	12,2	492	588	2,5	0,17	3,9	5,81	3,81
	5	598,8	12,5	23,5	498	632	4	0,18	3,76	5,59	3,67
	5	598,8	12,5	23,5	498	632	4	0,18	3,76	5,59	3,67
	6	637,3	12,5	23,5	503	677	5	0,21	3,27	4,87	3,2
	6	637,3	12,5	23,5	503	677	5	0,21	3,27	4,87	3,2
	6	628,1	12,5	23,5	503	677	5	0,28	2,43	3,61	2,37
	6	628,1	12,5	23,5	503	677	5	0,28	2,43	3,61	2,37
	7,5	690,4	12,5	23,5	512	758	6	0,3	2,23	3,32	2,18
	7,5	690,4	12,5	23,5	512	758	6	0,3	2,23	3,32	2,18
	7,5	673,14	12,5	23,5	512	758	6	0,38	1,79	2,67	1,75
	7,5	673,1	12,5	23,5	512	758	6	0,38	1,79	2,67	1,75
	7,5	737,6	12,5	23,5	512	838	6	0,36	1,9	2,83	1,86
	7,5	737,6	12,5	23,5	512	838	6	0,36	1,9	2,83	1,86

Spherical roller bearings

With cylindrical or tapered bore

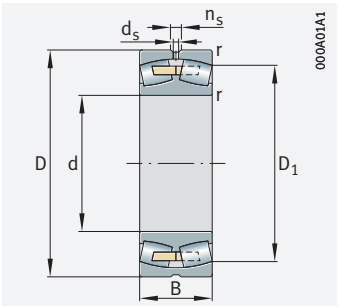

Solid cage, brass or steel; cylindrical bore

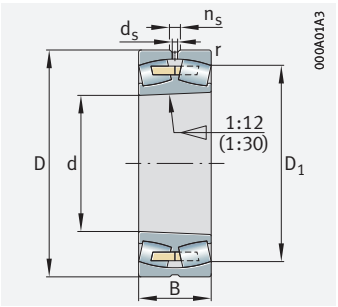

Solid cage, brass or steel; tapered bore

d = 500 – 530 mm

Main dimensions			Basic load ratings		Fatigue limit load	Limiting speed	Speed rating	Mass	Designation
d	D	B	dyn. C_r	stat. C_{0r}	C_{ur}	n_G	$n_{\vartheta r}$	m	➤*695|1.12* ➤*696|1.13* X-life ➤*684*
			kN	kN	N	min^{-1}	min^{-1}	≈ kg	
500	620	118	2 070	5 700	270 000	930	290	84,3	**248/500-B-MB**
	670	128	2 600	6 300	410 000	990	540	124	**239/500-K-MB**
	670	128	2 600	6 300	410 000	990	540	132	**239/500-MB**
	720	167	4 700	8 700	760 000	890	510	223	**230/500-BEA-XL-K-MB1**
	720	167	4 700	8 700	750 000	890	510	230	**230/500-BEA-XL-MB1**
	720	218	5 700	11 100	880 000	750	370	289	**240/500-BEA-XL-K30-MB1**
	720	218	5 700	11 100	880 000	750	370	294	**240/500-BEA-XL-MB1**
	830	264	8 300	13 900	890 000	690	350	574	**231/500-BEA-XL-K-MB1**
	830	264	8 300	13 900	890 000	690	350	593	**231/500-BEA-XL-MB1**
	830	325	10 000	17 300	1 190 000	600	209	692	**241/500-BEA-XL-K30-MB1**
	830	325	10 000	17 300	1 190 000	600	209	703	**241/500-BEA-XL-MB1**
	920	336	11 300	18 000	1 140 000	610	260	983	**232/500-BEA-XL-K-MB1**
	920	336	11 300	18 000	1 140 000	610	260	1 013	**232/500-BEA-XL-MB1**
530	650	118	2 240	6 400	385 000	880	260	89,7	**248/530-B-MB**
	710	136	2 850	6 900	395 000	930	500	160	**239/530-MB**
	710	136	2 850	6 900	395 000	930	500	146	**239/530-K-MB**
	780	185	5 600	10 100	860 000	820	475	312	**230/530-BEA-XL-MB1**
	780	185	5 600	10 100	860 000	820	475	302	**230/530-BEA-XL-K-MB1**
	780	250	7 000	13 500	1 050 000	670	335	403	**240/530-BEA-XL-K30-MB1**
	780	250	7 000	13 500	1 050 000	670	335	410	**240/530-BEA-XL-MB1**
	870	272	8 900	15 000	960 000	660	325	655	**231/530-BEA-XL-MB1**
	870	272	8 900	15 000	960 000	660	325	634	**231/530-BEA-XL-K-MB1**
	870	335	10 700	19 100	1 290 000	560	190	791	**241/530-BEA-XL-MB1**
	870	335	10 700	19 100	1 290 000	560	190	778	**241/530-BEA-XL-K30-MB1**
	980	355	12 700	20 400	1 270 000	570	235	1 183	**232/530-BEA-XL-K-MB1**
	980	355	12 700	20 400	1 270 000	570	235	1 201	**232/530-BEA-XL-MB1**

medias *https://www.schaeffler.de/std/1F9A*

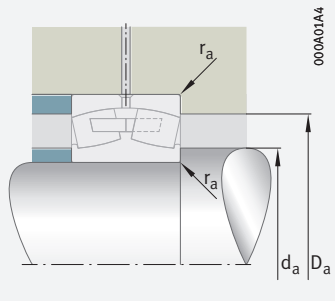

Mounting dimensions

Dimensions					Mounting dimensions			Calculation factors			
d	r min.	D_1 ≈	d_s	n_s	d_a min.	D_a max.	r_a max.	e	Y_1	Y_2	Y_0
500	3	582,7	6,3	12,2	512,4	607,6	2,5	0,17	4	5,96	3,91
	5	619,3	12,5	23,5	518	652	4	0,17	3,9	5,81	3,81
	5	619,3	12,5	23,5	518	652	4	0,17	3,9	5,81	3,81
	6	656,5	12,5	23,5	523	697	5	0,21	3,24	4,82	3,16
	6	656,5	12,5	23,5	523	697	5	0,21	3,24	4,82	3,16
	6	647,3	12,5	23,5	523	697	5	0,27	2,51	3,74	2,45
	6	647,3	12,5	23,5	523	697	5	0,27	2,51	3,74	2,45
	7,5	723,1	12,5	23,5	532	798	6	0,31	2,2	3,27	2,15
	7,5	723,1	12,5	23,5	532	798	6	0,31	2,2	3,27	2,15
	7,5	705,2	12,5	23,5	532	798	6	0,38	1,78	2,65	1,74
	7,5	705,2	12,5	23,5	532	798	6	0,38	1,78	2,65	1,74
	7,5	775	12,5	23,5	532	888	6	0,37	1,83	2,72	1,79
	7,5	775	12,5	23,5	532	888	6	0,37	1,83	2,72	1,79
530	3	614,1	6,3	12,2	542,4	637,6	2,5	0,16	4,22	6,29	4,13
	5	656,5	12,5	23,5	548	692	4	0,18	3,85	5,73	3,76
	5	656,5	12,5	23,5	548	692	4	0,18	3,85	5,73	3,76
	6	708	12,5	23,5	553	757	5	0,22	3,1	4,62	3,03
	6	708	12,5	23,5	553	757	5	0,22	3,1	4,62	3,03
	6	694,4	12,5	23,5	553	757	5	0,29	2,33	3,47	2,28
	6	694,4	12,5	23,5	553	757	5	0,29	2,33	3,47	2,28
	7,5	760,5	12,5	23,5	562	838	6	0,3	2,25	3,34	2,2
	7,5	760,5	12,5	23,5	562	838	6	0,3	2,25	3,34	2,2
	7,5	742,9	12,5	23,5	562	838	6	0,37	1,83	2,72	1,79
	7,5	742,9	12,5	23,5	562	838	6	0,37	1,83	2,72	1,79
	9,5	826,4	12,5	23,5	570	940	8	0,37	1,84	2,74	1,8
	9,5	826,4	12,5	23,5	570	940	8	0,37	1,84	2,74	1,8

Spherical roller bearings

With cylindrical or tapered bore

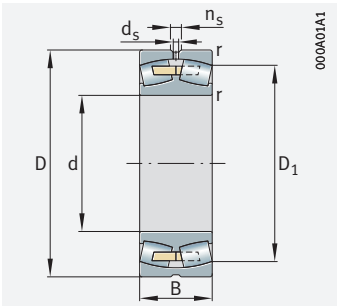

Solid cage, brass or steel; cylindrical bore

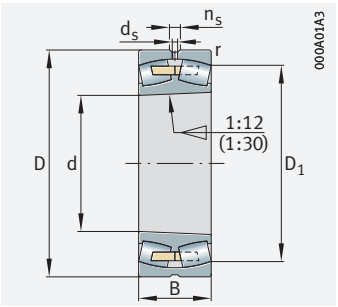

Solid cage, brass or steel; tapered bore

d = 560 – 600 mm

Main dimensions			Basic load ratings		Fatigue limit load	Limiting speed	Speed rating	Mass	Designation
d	D	B	dyn. C_r	stat. C_{0r}	C_{ur}	n_G	$n_{\vartheta r}$	m	➤*695|1.12* ➤*696|1.13* X-life ➤*684*
			kN	kN	N	min^{-1}	min^{-1}	≈ kg	
560	680	118	2 210	6 300	400 000	840	250	92,7	**248/560-B-MB**
	750	140	3 100	7 600	540 000	880	465	181	**239/560-B-MB**
	750	140	3 100	7 600	540 000	880	465	176	**239/560-B-K-MB**
	820	195	6 100	11 200	940 000	760	440	361	**230/560-BEA-XL-MB1**
	820	195	6 100	11 200	940 000	760	440	350	**230/560-BEA-XL-K-MB1**
	820	258	7 500	14 600	1 150 000	630	315	459	**240/560-BEA-XL-K30-MB1**
	820	258	7 500	14 600	1 150 000	630	315	466	**240/560-BEA-XL-MB1**
	920	280	9 700	16 400	1 060 000	630	300	754	**231/560-BEA-XL-MB1**
	920	280	9 700	16 400	1 060 000	630	300	731	**231/560-BEA-XL-K-MB1**
	920	355	12 000	21 000	1 440 000	530	177	929	**241/560-BEA-XL-MB1**
	920	355	12 000	21 000	1 440 000	530	177	914	**241/560-BEA-XL-K30-MB1**
	1 030	355	13 000	21 800	1 380 000	540	220	1 346	**232/560-BEA-XL-K-MB1**
	1 030	355	13 000	21 800	1 380 000	540	220	1 372	**232/560-BEA-XL-MB1**
600	730	98	1 960	5 300	360 000	980	435	84	**238/600-K-MB**
	730	98	1 960	5 300	360 000	980	435	87	**238/600-MB**
	730	128	2 550	7 300	450 000	780	228	116	**248/600-B-MB**
	800	150	3 450	8 600	640 000	810	430	224	**239/600-B-MB**
	800	150	3 450	8 600	640 000	810	430	210	**239/600-B-K-MB**
	870	200	6 600	12 300	1 020 000	710	405	411	**230/600-BEA-XL-MB1**
	870	200	6 600	12 300	1 020 000	710	405	398	**230/600-BEA-XL-K-MB1**
	870	272	8 300	16 600	1 260 000	580	285	536	**240/600-BEA-XL-K30-MB1**
	870	272	8 300	16 600	1 260 000	580	285	545	**240/600-BEA-XL-MB1**
	920	355	13 300	24 000	1 580 000	485	159	1 099	**241/600-BEA-XL-K30-MB1**
	920	355	13 300	24 000	1 580 000	485	159	1 116	**241/600-BEA-XL-MB1**
	980	300	10 900	18 600	1 180 000	580	275	880	**231/600-BEA-XL-K-MB1**
	980	300	10 900	18 600	1 180 000	580	275	929	**231/600-BEA-XL-MB1**
	1 090	388	15 200	25 500	1 530 000	495	194	1 631	**232/600-BEA-XL-MB1**
	1 090	388	15 200	25 500	1 530 000	495	194	1 584	**232/600-BEA-XL-K-MB1**

medias *https://www.schaeffler.de/std/1F9A*

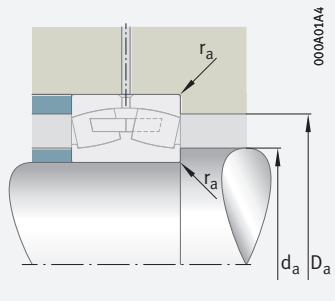

Mounting dimensions

Dimensions					Mounting dimensions			Calculation factors			
d	r min.	D_1 ≈	d_s	n_s	d_a min.	D_a max.	r_a max.	e	Y_1	Y_2	Y_0
560	3	644,6	6,3	12,2	542	638	2,5	0,15	4,47	6,65	4,37
	5	693,4	12,5	23,5	578	732	4	0,17	3,95	5,88	3,86
	5	693,4	12,5	23,5	578	732	4	0,17	3,95	5,88	3,86
	6	745	12,5	23,5	583	797	5	0,22	3,1	4,62	3,03
	6	745	12,5	23,5	583	797	5	0,22	3,1	4,62	3,03
	6	732,4	12,5	23,5	583	797	5	0,28	2,39	3,56	2,34
	6	732,4	12,5	23,5	583	797	5	0,28	2,39	3,56	2,34
	7,5	806,6	12,5	23,5	592	888	6	0,29	2,32	3,45	2,26
	7,5	806,6	12,5	23,5	592	888	6	0,29	2,32	3,45	2,26
	7,5	791,5	12,5	23,5	592	888	6	0,37	1,83	2,72	1,79
	7,5	791,5	12,5	23,5	592	888	6	0,37	1,83	2,72	1,79
	9,5	872,6	12,5	23,5	600	990	8	0,36	1,89	2,81	1,84
	9,5	872,6	12,5	23,5	600	990	8	0,36	1,89	2,81	1,84
600	3	696,3	6,3	12,2	612,4	717,6	2,5	0,12	5,78	8,61	5,65
	3	696,3	6,3	12,2	612,4	717,6	2,5	0,12	5,78	8,61	5,65
	3	691,5	6,3	12,2	612,4	717,6	2,5	0,15	4,4	6,56	4,31
	5	740,5	12,5	23,5	618	782	4	0,17	3,95	5,88	3,86
	5	740,5	12,5	23,5	618	782	4	0,17	3,95	5,88	3,86
	6	793,3	12,5	23,5	623	847	5	0,21	3,24	4,82	3,16
	6	793,3	12,5	23,5	623	847	5	0,21	3,24	4,82	3,16
	6	778,4	12,5	23,5	623	847	5	0,28	2,41	3,59	2,35
	6	778,4	12,5	23,5	623	847	5	0,28	2,41	3,59	2,35
	7,5	791,5	12,5	23,5	592	888	6	0,37	1,84	2,74	1,8
	7,5	791,5	12,5	23,5	592	888	6	0,37	1,84	2,74	1,8
	7,5	859,35	12,5	23,5	632	948	6	0,29	2,3	3,42	2,25
	7,5	859,35	12,5	23,5	632	948	6	0,29	2,3	3,42	2,25
	9,5	924	12,5	23,5	640	1 050	8	0,36	1,9	2,83	1,86
	9,5	924	12,5	23,5	640	1 050	8	0,36	1,9	2,83	1,86

Spherical roller bearings

With cylindrical or tapered bore

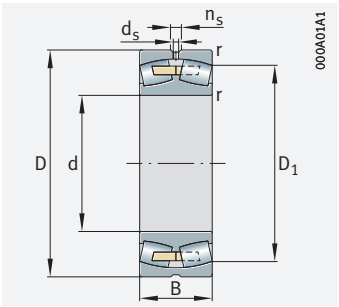

Solid cage, brass or steel; cylindrical bore

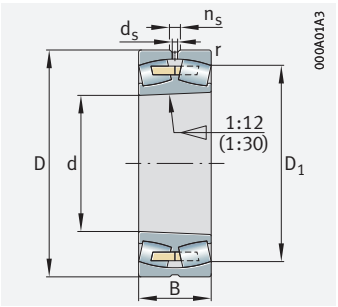

Solid cage, brass or steel; tapered bore

d = 630 – 670 mm

Main dimensions			Basic load ratings		Fatigue limit load	Limiting speed	Speed rating	Mass	Designation
d	D	B	dyn. C_r	stat. C_{0r}	C_{ur}	n_G	$n_{\vartheta r}$	m	➤*695|1.12* ➤*696|1.13* X-life ➤*684*
			kN	kN	N	min^{-1}	min^{-1}	≈ kg	
630	780	112	2 650	6 400	590 000	860	410	120	**238/630-XL-K-MA1**
	780	112	2 650	6 400	590 000	860	410	122	**238/630-XL-MA1**
	780	150	3 200	9 000	570 000	700	219	163	**248/630-MB**
	850	165	4 100	9 900	720 000	740	405	292	**239/630-B-MB**
	850	165	4 100	9 900	720 000	740	405	283	**239/630-B-K-MB**
	920	212	7 400	13 700	1 130 000	670	380	491	**230/630-BEA-XL-MB1**
	920	212	7 400	13 700	1 130 000	670	380	476	**230/630-BEA-XL-K-MB1**
	920	290	9 400	18 600	1 390 000	550	265	656	**240/630-BEA-XL-MB1**
	920	290	9 400	18 600	1 390 000	550	265	645	**240/630-BEA-XL-K30-MB1**
	1 030	315	12 000	20 600	1 280 000	540	255	1 042	**231/630-BEA-XL-MB1**
	1 030	315	12 000	20 600	1 280 000	540	255	1 025	**231/630-BEA-XL-K-MB1**
	1 030	400	14 800	27 000	1 720 000	455	146	1 292	**241/630-BEA-XL-K30-MB1**
	1 030	400	14 800	27 000	1 720 000	455	146	1 308	**241/630-BEA-XL-MB1**
	1 150	412	16 900	28 500	1 680 000	460	179	1 940	**232/630-BEA-XL-MB1**
	1 150	412	16 900	28 500	1 680 000	460	179	1 885	**232/630-BEA-XL-K-MB1**
670	820	112	2 380	6 900	460 000	810	380	124	**238/670-B-K-MB**
	820	112	2 380	6 900	460 000	810	380	129	**238/670-B-MB**
	820	150	3 350	9 700	600 000	670	191	175	**248/670-B-MB**
	900	170	4 300	10 600	760 000	710	375	310	**239/670-B-K-MB**
	900	170	4 300	10 600	760 000	710	375	320	**239/670-B-MB**
	900	230	5 900	14 900	970 000	580	174	429	**249/670-B-K30-MB**
	900	230	5 900	14 900	970 000	580	174	433	**249/670-B-MB**
	980	230	8 400	15 900	1 100 000	630	480	581	**230/670-BEA-XL-K-MB1**
	980	230	8 400	15 900	1 100 000	630	480	601	**230/670-BEA-XL-MB1**
	980	308	10 500	21 100	1 540 000	510	241	785	**240/670-BEA-XL-MB1**
	980	308	10 500	21 100	1 540 000	510	241	775	**240/670-BEA-XL-K30-MB1**
	1 090	336	13 300	23 800	1 410 000	370	231	1 279	**231/670-BEA-XL-MB1**
	1 090	336	13 300	23 800	1 410 000	370	231	1 211	**231/670-BEA-XL-K-MB1**
	1 090	412	16 100	29 500	1 900 000	430	134	1 513	**241/670-BEA-XL-MB1**
	1 090	412	16 100	29 500	1 900 000	430	134	1 485	**241/670-BEA-XL-K30-MB1**
	1 220	438	19 000	32 500	1 860 000	425	162	2 287	**232/670-BEA-XL-MB1**
	1 220	438	19 000	32 500	1 860 000	425	162	2 240	**232/670-BEA-XL-K-MB1**

medias *https://www.schaeffler.de/std/1F9A*

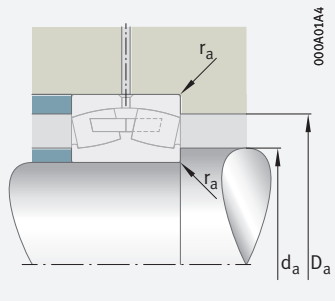

Mounting dimensions

Dimensions					Mounting dimensions			Calculation factors			
d	r min.	D_1 ≈	d_s	n_s	d_a min.	D_a max.	r_a max.	e	Y_1	Y_2	Y_0
630	4	736,8	8	15	644,6	765,4	3	0,12	5,51	8,21	5,39
	4	736,8	8	15	644,6	765,4	3	0,12	5,51	8,21	5,39
	4	–	8	15	645	765	3	0,17	3,95	5,88	3,86
	6	784,5	12,5	23,5	653	827	5	0,18	3,8	5,66	3,72
	6	784,5	12,5	23,5	653	827	5	0,18	3,8	5,66	3,72
	7,5	838,2	12,5	23,5	658	892	6	0,21	3,24	4,82	3,16
	7,5	838,2	12,5	23,5	658	892	6	0,21	3,24	4,82	3,16
	7,5	821,5	12,5	23,5	658	892	6	0,28	2,39	3,56	2,34
	7,5	821,5	12,5	23,5	658	892	6	0,28	2,39	3,56	2,34
	7,5	902,1	12,5	23,5	662	998	6	0,29	2,3	3,42	2,25
	7,5	902,1	12,5	23,5	662	998	6	0,29	2,3	3,42	2,25
	7,5	876,2	12,5	23,5	662	998	6	0,37	1,82	2,7	1,78
	7,5	876,2	12,5	23,5	662	998	6	0,37	1,82	2,7	1,78
	12	973,4	12,5	23,5	678	1 102	10	0,36	1,87	2,79	1,83
	12	973,4	12,5	23,5	678	1 102	10	0,36	1,87	2,79	1,83
670	4	777,2	8	15	684,6	805,4	3	0,12	5,72	8,51	5,59
	4	777,2	8	15	684,6	805,4	3	0,12	5,72	8,51	5,59
	4	775,2	8	15	684,6	805,4	3	0,16	4,22	6,29	4,13
	6	831,5	12,5	23,5	693	877	5	0,17	3,95	5,88	3,86
	6	831,5	12,5	23,5	693	877	5	0,17	3,95	5,88	3,86
	6	826,5	12,5	23,5	693	877	5	0,24	2,81	4,19	2,75
	6	826,5	12,5	23,5	693	877	5	0,24	2,81	4,19	2,75
	7,5	888,7	12,5	23,5	698	952	6	0,22	3,14	4,67	3,07
	7,5	888,7	12,5	23,5	698	952	6	0,22	3,14	4,67	3,07
	7,5	878,2	12,5	23,5	698	952	6	0,28	2,39	3,56	2,34
	7,5	878,2	12,5	23,5	698	952	6	0,28	2,39	3,56	2,34
	7,5	954,85	12,5	23,5	702	1 058	6	0,29	2,3	3,42	2,25
	7,5	954,85	12,5	23,5	702	1 058	6	0,29	2,3	3,42	2,25
	7,5	937	12,5	23,5	702	1 058	6	0,36	1,87	2,79	1,83
	7,5	937	12,5	23,5	702	1 058	6	0,36	1,87	2,79	1,83
	12	1 032,6	12,5	23,5	718	1 172	12	0,36	1,87	2,79	1,83
	12	1 032,6	12,5	23,5	718	1 172	12	0,36	1,87	2,79	1,83

Spherical roller bearings

With cylindrical or tapered bore

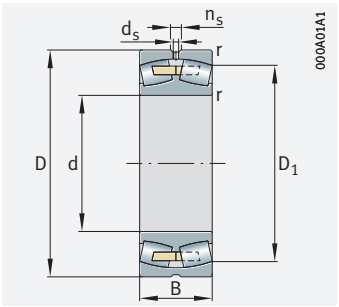

Solid cage, brass or steel; cylindrical bore

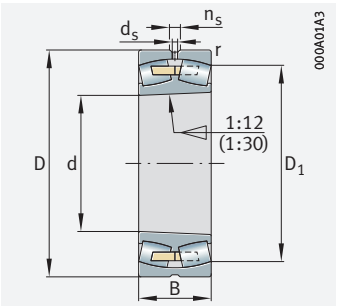

Solid cage, brass or steel; tapered bore

d = 710 – 750 mm

Main dimensions			Basic load ratings		Fatigue limit load	Limiting speed	Speed rating	Mass	Designation
d	D	B	dyn. C_r	stat. C_{0r}	C_{ur}	n_G	$n_{\vartheta r}$	m	➤*695*|*1.12* ➤*696*|*1.13*
			kN	kN	N	min^{-1}	min^{-1}	≈ kg	
710	870	118	2 650	7 500	550 000	770	355	148	**238/710-K-MB**
	870	118	2 650	7 500	550 000	770	355	153	**238/710-MB**
	870	160	3 700	11 000	800 000	610	175	215	**248/710-B-MB**
	950	180	4 800	12 100	740 000	670	350	336	**239/710-K-MB**
	950	180	4 800	12 100	740 000	670	350	355	**239/710-MB**
	950	243	6 600	16 900	1 080 000	550	159	488	**249/710-B-K30-MB**
	950	243	6 600	16 900	1 080 000	550	159	494	**249/710-B-MB**
	1 030	236	9 000	17 300	1 390 000	580	320	679	**230/710-BEA-XL-MB1**
	1 030	236	9 000	17 300	1 390 000	580	320	658	**230/710-BEA-XL-K-MB1**
	1 030	315	11 000	22 500	1 660 000	485	225	874	**240/710-BEA-XL-MB1**
	1 030	315	11 000	22 500	1 660 000	485	225	866	**240/710-BEA-XL-K30-MB1**
	1 150	345	14 400	25 500	1 550 000	470	216	1 383	**231/710-BEA-XL-K-MB1**
	1 150	345	14 400	25 500	1 550 000	470	216	1 425	**231/710-BEA-XL-MB1**
	1 150	438	15 600	35 500	2 340 000	395	116	1 791	**241/710-B-K30-MB**
	1 150	438	15 600	35 500	2 340 000	395	116	1 818	**241/710-B-MB**
	1 280	450	20 500	35 000	2 020 000	410	151	2 600	**232/710-BEA-XL-MB1**
	1 280	450	20 500	35 000	2 020 000	410	151	2 474	**232/710-BEA-XL-K-MB1**
750	920	128	3 000	8 700	610 000	720	330	180	**238/750-B-K-MB**
	920	128	3 000	8 700	610 000	720	330	186	**238/750-B-MB**
	920	170	4 150	12 500	760 000	570	160	254	**248/750-B-MB**
	1 000	185	5 200	13 000	810 000	640	325	394	**239/750-K-MB**
	1 000	185	5 200	13 000	810 000	640	325	426	**239/750-MB**
	1 000	250	7 200	18 900	1 200 000	510	143	558	**249/750-B-K30-MB**
	1 000	250	7 200	18 900	1 200 000	510	143	571	**249/750-B-MB**
	1 090	250	10 100	19 300	1 540 000	550	300	803	**230/750-BEA-XL-MB1**
	1 090	250	10 100	19 300	1 540 000	550	300	797,4	**230/750-BEA-XL-K-MB1**
	1 090	355	12 300	25 500	1 860 000	450	207	1 067	**240/750-BEA-XL-MB1**
	1 090	355	12 300	25 500	1 860 000	450	207	1 053	**240/750-BEA-XL-K30-MB1**
	1 220	365	16 000	28 500	1 720 000	440	198	1 640	**231/750-BEA-XL-K-MB1**
	1 220	365	16 000	28 500	1 720 000	440	198	1 672	**231/750-BEA-XL-MB1**
	1 220	475	17 800	41 000	2 700 000	360	104	2 298	**241/750-B-K30-MB**
	1 220	475	17 800	41 000	2 700 000	360	104	2 276	**241/750-B-MB**
	1 360	475	22 800	39 500	2 240 000	380	137	2 969	**232/750-BEA-XL-K-MB1**
	1 360	475	22 800	39 500	2 240 000	380	137	3 030	**232/750-BEA-XL-MB1**

medias *https://www.schaeffler.de/std/1F9A*

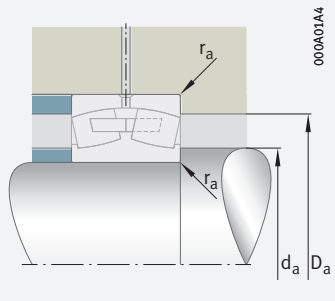

Mounting dimensions

Dimensions					Mounting dimensions			Calculation factors			
d	r	D_1	d_s	n_s	d_a	D_a	r_a	e	Y_1	Y_2	Y_0
	min.	≈			min.	max.	max.				
710	4	824,9	8	15	724,6	855,4	3	0,12	5,72	8,51	5,59
	4	824,9	8	15	724,6	855,4	3	0,12	5,72	8,51	5,59
	4	–	8	15	725	855	3	0,16	4,22	6,29	4,13
	6	877,5	12,5	23,5	733	927	5	0,18	3,85	5,73	3,76
	6	877,5	12,5	23,5	733	927	5	0,18	3,85	5,73	3,76
	6	–	12,5	23,5	733	927	5	0,24	2,81	4,19	2,75
	6	–	12,5	23,5	733	927	5	0,24	2,81	4,19	2,75
	7,5	939,6	12,5	23,5	738	1 002	6	0,21	3,24	4,82	3,16
	7,5	939,6	12,5	23,5	738	1 002	6	0,21	3,24	4,82	3,16
	7,5	925	12,5	23,5	738	1 002	6	0,28	2,43	3,61	2,37
	7,5	925	12,5	23,5	738	1 002	6	0,28	2,43	3,61	2,37
	9,5	1 010,8	12,5	23,5	750	1 110	8	0,29	2,35	3,5	2,3
	9,5	1 010,8	12,5	23,5	750	1 110	8	0,29	2,35	3,5	2,3
	9,5	980,2	12,5	23,5	750	1 110	8	0,38	1,79	2,67	1,75
	9,5	980,2	12,5	23,5	750	1 110	8	0,38	1,79	2,67	1,75
	12	1 089	12,5	23,5	758	1 232	10	0,35	1,92	2,86	1,88
	12	1 089	12,5	23,5	758	1 232	10	0,35	1,92	2,86	1,88
750	5	872,1	8	15	768	902	4	0,12	5,61	8,36	5,49
	5	872,1	8	15	768	902	4	0,12	5,61	8,36	5,49
	5	868,2	8	15	768	902	4	0,16	4,11	6,12	4,02
	6	923,2	12,5	23,5	773	977	5	0,17	3,95	5,88	3,86
	6	923,2	12,5	23,5	773	977	5	0,17	3,95	5,88	3,86
	6	921,7	12,5	23,5	773	977	5	0,22	3,1	4,62	3,03
	6	921,7	12,5	23,5	773	977	5	0,22	3,1	4,62	3,03
	7,5	992,8	12,5	23,5	778	1 062	6	0,21	3,24	4,82	3,16
	7,5	992,8	12,5	23,5	778	1 062	6	0,21	3,24	4,82	3,16
	7,5	977,5	12,5	23,5	778	1 062	6	0,28	2,41	3,59	2,35
	7,5	977,5	12,5	23,5	778	1 062	6	0,28	2,41	3,59	2,35
	9,5	1 070,8	12,5	23,5	790	1 180	8	0,28	2,37	3,53	2,32
	9,5	1 070,8	12,5	23,5	790	1 180	8	0,28	2,37	3,53	2,32
	9,5	1 035,8	12,5	23,5	790	1 180	8	0,38	1,76	2,62	1,72
	9,5	1 035,8	12,5	23,5	790	1 180	8	0,38	1,76	2,62	1,72
	15	1 157,6	12,5	23,5	808	1 302	12	0,35	1,94	2,88	1,89
	15	1 157,6	12,5	23,5	808	1 302	12	0,35	1,94	2,88	1,89

Spherical roller bearings

With cylindrical or tapered bore

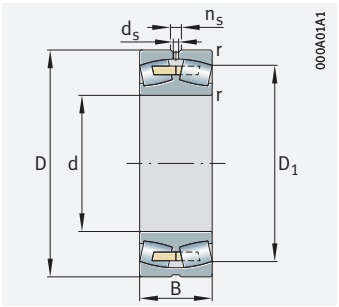

Solid cage, brass or steel; cylindrical bore

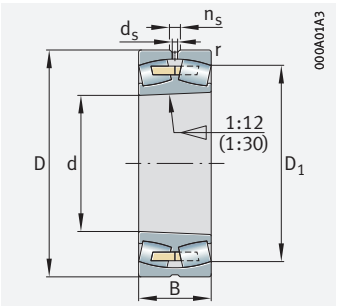

Solid cage, brass or steel; tapered bore

d = 800 – 850 mm

Main dimensions			Basic load ratings		Fatigue limit load	Limiting speed	Speed rating	Mass	Designation
d	D	B	dyn. C_r	stat. C_{0r}	C_{ur}	n_G	$n_{\vartheta r}$	m	➤*695|1.12* ➤*696|1.13*
			kN	kN	N	min^{-1}	min^{-1}	≈ kg	
800	980	136	3 400	9 900	690 000	660	305	216	**238/800-B-K-MB**
	980	136	3 400	9 900	690 000	660	305	223	**238/800-B-MB**
	980	180	4 650	14 000	850 000	540	146	301	**248/800-B-MB**
	1 060	195	5 900	15 100	1 030 000	580	295	490	**239/800-B-K-MB**
	1 060	195	5 900	15 100	1 030 000	580	295	506	**239/800-B-MB**
	1 060	258	7 700	20 300	1 390 000	480	133	639	**249/800-B-K30-MB**
	1 060	258	7 700	20 300	1 390 000	480	133	650	**249/800-B-MB**
	1 150	258	10 900	21 200	1 680 000	520	275	865,4	**230/800-BEA-XL-K-MB1**
	1 150	258	10 900	21 200	1 680 000	520	275	896,7	**230/800-BEA-XL-MB1**
	1 150	345	13 300	28 000	1 980 000	420	189	1 187	**240/800-BEA-XL-MB1**
	1 150	345	13 300	28 000	1 980 000	420	189	1 168	**240/800-BEA-XL-K30-MB1**
	1 280	375	17 100	31 500	1 850 000	415	181	1 861	**231/800-BEA-XL-K-MB1**
	1 280	375	17 100	31 500	1 850 000	415	181	1 919	**231/800-BEA-XL-MB1**
	1 280	475	18 700	43 500	2 500 000	345	96	2 530	**241/800-B-K30-MB**
	1 280	475	18 700	43 500	2 500 000	345	96	2 530	**241/800-B-MB**
	1 420	488	24 400	43 500	2 420 000	355	125	3 437	**232/800-BEA-XL-MB1**
	1 420	488	24 400	43 500	2 420 000	355	125	3 339	**232/800-BEA-XL-K-MB1**
850	1 030	136	3 500	10 600	730 000	620	285	228	**238/850-K-MB**
	1 030	136	3 500	10 600	730 000	620	285	236	**238/850-MB**
	1 030	180	4 900	14 900	900 000	530	144	312	**248/850-MB**
	1 120	200	6 300	16 400	980 000	550	275	554	**239/850-K-MB**
	1 120	200	6 300	16 400	980 000	550	275	579	**239/850-MB**
	1 120	272	8 400	22 500	1 400 000	445	123	743	**249/850-B-K30-MB**
	1 120	272	8 400	22 500	1 400 000	445	123	756	**249/850-B-MB**
	1 220	272	11 900	24 000	1 840 000	475	255	1 038	**230/850-BEA-XL-K-MB1**
	1 220	272	11 900	24 000	1 840 000	475	255	1 069	**230/850-BEA-XL-MB1**
	1 220	365	14 800	31 500	2 210 000	390	173	1 401	**240/850-BEA-XL-MB1**
	1 220	365	14 800	31 500	2 210 000	390	173	1 375	**240/850-BEA-XL-K30-MB1**
	1 360	400	19 200	36 000	2 060 000	385	164	2 241	**231/850-BEA-XL-K-MB1**
	1 360	400	19 200	36 000	2 060 000	385	164	2 311	**231/850-BEA-XL-MB1**
	1 360	500	21 200	48 500	3 150 000	330	88	2 836	**241/850-B-K30-MB**
	1 360	500	21 200	48 500	3 150 000	330	88	2 948	**241/850-B-MB**
	1 500	515	27 000	48 500	2 650 000	335	115	4 021	**232/850-BEA-XL-MB1**
	1 500	515	27 000	48 500	2 650 000	335	115	3 905	**232/850-BEA-XL-K-MB1**

medias *https://www.schaeffler.de/std/1F9A*

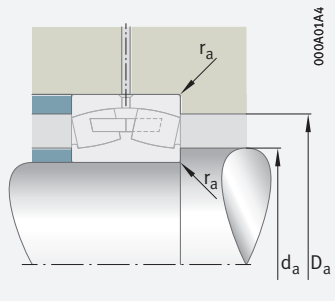

Mounting dimensions

Dimensions					Mounting dimensions			Calculation factors			
d	r	D_1	d_s	n_s	d_a	D_a	r_a	e	Y_1	Y_2	Y_0
	min.	≈			min.	max.	max.				
800	5	927,6	8	15	818	962	4	0,12	5,72	8,51	5,59
	5	927,6	8	15	818	962	4	0,12	5,72	8,51	5,59
	5	925,4	8	15	818	962	4	0,16	4,11	6,12	4,02
	6	983,7	12,5	23,5	823	1 037	5	0,17	4,05	6,04	3,96
	6	983,7	12,5	23,5	823	1 037	5	0,17	4,05	6,04	3,96
	6	978,6	12,5	23,5	823	1 037	5	0,23	2,98	4,44	2,92
	6	978,6	12,5	23,5	823	1 037	5	0,23	2,98	4,44	2,92
	7,5	1 050,4	12,5	23,5	828	1 122	6	0,2	3,31	4,92	3,23
	7,5	1 050,4	12,5	23,5	828	1 122	6	0,2	3,31	4,92	3,23
	7,5	1 035,7	12,5	23,5	828	1 122	6	0,27	2,49	3,71	2,43
	7,5	1 035,7	12,5	23,5	828	1 122	6	0,27	2,49	3,71	2,43
	9,5	1 129,5	12,5	23,5	840	1 240	8	0,28	2,43	3,61	2,37
	9,5	1 129,45	12,5	23,5	840	1 240	8	0,28	2,43	3,61	2,37
	9,5	1 099,5	12,5	23,5	840	1 240	8	0,36	1,86	2,77	1,82
	9,5	1 099,5	12,5	23,5	840	1 240	8	0,36	1,86	2,77	1,82
	15	1 215,3	12,5	23,5	858	1 362	12	0,34	1,99	2,96	1,94
	15	1 215,3	12,5	23,5	858	1 362	12	0,34	1,99	2,96	1,94
850	5	978,1	8	15	868	1 012	4	0,11	6,06	9,02	5,92
	5	978,1	8	15	868	1 012	4	0,11	6,06	9,02	5,92
	5	973,9	8	15	868	1 012	4	0,15	4,4	6,56	4,31
	6	1 039,9	12,5	23,5	873	1 097	5	0,16	4,11	6,12	4,02
	6	1 039,9	12,5	23,5	873	1 097	5	0,16	4,11	6,12	4,02
	6	1 033,9	12,5	23,5	873	1 097	5	0,23	2,98	4,44	2,92
	6	1 033,9	12,5	23,5	873	1 097	5	0,23	2,98	4,44	2,92
	7,5	1 115,1	12,5	23,5	878	1 192	6	0,2	3,34	4,98	3,27
	7,5	1 115,1	12,5	23,5	878	1 192	6	0,2	3,34	4,98	3,27
	7,5	1 099,4	12,5	23,5	878	1 192	6	0,27	2,51	3,74	2,45
	7,5	1 099,4	12,5	23,5	878	1 192	6	0,27	2,51	3,74	2,45
	12	1 199,1	12,5	23,5	898	1 312	10	0,28	2,43	3,61	2,37
	12	1 199,1	12,5	23,5	898	1 312	10	0,28	2,43	3,61	2,37
	12	1 171,7	12,5	23,5	898	1 312	10	0,36	1,89	2,81	1,84
	12	1 171,7	12,5	23,5	898	1 312	10	0,36	1,89	2,81	1,84
	15	1 285,3	12,5	23,5	908	1 442	12	0,34	1,99	2,96	1,94
	15	1 285,3	12,5	23,5	908	1 442	12	0,34	1,99	2,96	1,94

Spherical roller bearings

With cylindrical or tapered bore

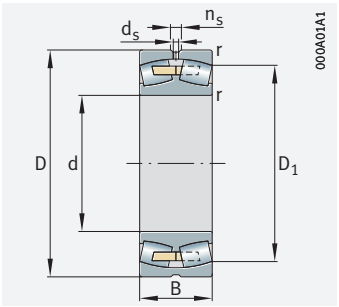

Solid cage, brass or steel; cylindrical bore

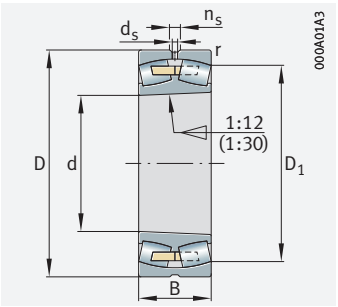

Solid cage, brass or steel; tapered bore

d = 900 – 950 mm

Main dimensions			Basic load ratings		Fatigue limit load	Limiting speed	Speed rating	Mass	Designation
d	D	B	dyn. C_r	stat. C_{0r}	C_{ur}	n_G	$n_{\vartheta r}$	m	➤*695|1.12* ➤*696|1.13*
			kN	kN	N	min^{-1}	min^{-1}	≈ kg	
900	1 090	140	3 750	11 600	780 000	590	260	262	**238/900-B-K-MB**
	1 090	140	3 750	11 600	780 000	590	260	271	**238/900-B-MB**
	1 090	190	5 200	16 700	990 000	465	124	382	**248/900-B-MB**
	1 180	206	6 500	17 200	1 030 000	520	260	641	**239/900-K-MB**
	1 180	206	6 500	17 200	1 030 000	520	260	653	**239/900-MB**
	1 280	280	12 800	25 500	1 990 000	340	239	1 163	**230/900-BEA-XL-K-MB1**
	1 280	280	12 800	25 500	1 990 000	340	239	1 200	**230/900-BEA-XL-MB1**
	1 280	375	13 500	34 500	2 430 000	370	160	1 574	**240/900-BEA-XL-MB1**
	1 280	375	13 500	34 500	2 430 000	370	160	1 560	**240/900-BEA-XL-K30-MB1**
	1 420	412	20 700	38 500	2 230 000	365	155	2 532	**231/900-BEA-XL-MB1**
	1 420	412	20 700	38 500	2 230 000	365	155	2 456	**231/900-BEA-XL-K-MB1**
	1 580	515	28 500	52 000	2 900 000	320	105	4 459	**232/900-BEA-XL-MB1**
	1 580	515	28 500	52 000	2 900 000	320	105	4 336	**232/900-BEA-XL-K-MB1**
950	1 150	200	5 700	18 500	1 060 000	430	114	431	**248/950-MB**
	1 250	224	7 500	19 900	1 310 000	475	239	747	**239/950-B-K-MB**
	1 250	224	7 500	19 900	1 310 000	475	239	769	**239/950-B-MB**
	1 250	300	10 300	28 500	1 750 000	385	101	1 013	**249/950-B-K30-MB**
	1 250	300	10 300	28 500	1 750 000	385	101	1 031	**249/950-B-MB**
	1 360	300	14 400	29 000	2 160 000	420	220	1 425	**230/950-BEA-XL-K-MB1**
	1 360	300	14 400	29 000	2 160 000	420	220	1 469	**230/950-BEA-XL-MB1**
	1 360	412	18 400	40 000	2 650 000	340	147	1 999	**240/950-BEA-XL-MB1**
	1 360	412	18 400	40 000	2 650 000	340	147	1 966	**240/950-BEA-XL-K30-MB1**
	1 500	545	23 700	54 000	3 100 000	300	81	3 777	**241/950-B-K30-MB**
	1 500	545	23 700	54 000	3 100 000	300	81	3 819	**241/950-B-MB**

medias *https://www.schaeffler.de/std/1F9A*

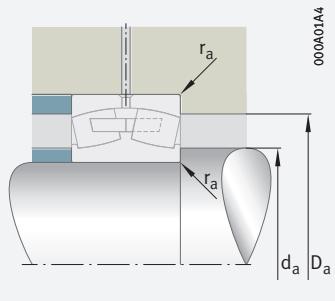

Mounting dimensions

Dimensions					Mounting dimensions			Calculation factors			
d	r	D_1	d_s	n_s	d_a	D_a	r_a	e	Y_1	Y_2	Y_0
	min.	≈			min.	max.	max.				
900	5	1 036,1	8	15	918	1 072	4	0,11	6,06	9,02	5,92
	5	1 036,1	8	15	918	1 072	4	0,11	6,06	9,02	5,92
	5	1 030,5	8	15	918	1 072	4	0,15	4,4	6,56	4,31
	6	1 098,8	12,5	23,5	923	1 157	5	0,16	4,28	6,37	4,19
	6	1 098,8	12,5	23,5	923	1 157	5	0,16	4,28	6,37	4,19
	7,5	1 174,3	12,5	23,5	928	1 252	6	0,2	3,42	5,09	3,34
	7,5	1 174,3	12,5	23,5	928	1 252	6	0,2	3,42	5,09	3,34
	7,5	1 157,4	12,5	23,5	928	1 252	6	0,26	2,57	3,83	2,52
	7,5	1 157,4	12,5	23,5	928	1 252	6	0,26	2,57	3,83	2,52
	12	1 256,15	12,5	23,5	948	1 372	10	0,27	2,47	3,67	2,41
	12	1 256,2	12,5	23,5	948	1 372	10	0,27	2,47	3,67	2,41
	15	1 365,5	12,5	23,5	958	1 522	12	0,32	2,12	3,15	2,07
	15	1 365,5	12,5	23,5	958	1 522	12	0,32	2,12	3,15	2,07
950	5	1 087,1	8	15	968	1 132	4	0,15	4,4	6,56	4,31
	7,5	1 162,5	12,5	23,5	978	1 222	6	0,16	4,22	6,29	4,13
	7,5	1 162,5	12,5	23,5	978	1 222	6	0,16	4,22	6,29	4,13
	7,5	1 155	12,5	23,5	978	1 222	6	0,22	3,01	4,48	2,94
	7,5	1 155	12,5	23,5	978	1 222	6	0,22	3,01	4,48	2,94
	7,5	1 245,7	12,5	23,5	978	1 332	6	0,2	3,38	5,03	3,31
	7,5	1 245,75	12,5	23,5	978	1 332	6	0,2	3,38	5,03	3,31
	7,5	1 220,4	12,5	23,5	978	1 332	6	0,27	2,47	3,67	2,41
	7,5	1 220,4	12,5	23,5	978	1 332	6	0,27	2,47	3,67	2,41
	12	1 304,8	12,5	23,5	998	1 452	10	0,35	1,92	2,86	1,88
	12	1 304,8	12,5	23,5	998	1 452	10	0,35	1,92	2,86	1,88

Spherical roller bearings

With cylindrical or tapered bore

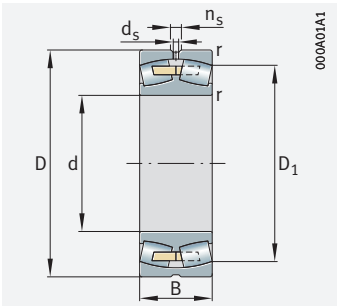

Solid cage, brass or steel; cylindrical bore

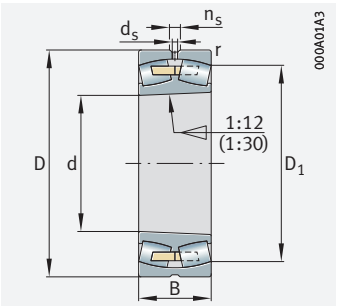

Solid cage, brass or steel; tapered bore

d = 1 000 – 1 120 mm

Main dimensions			Basic load ratings		Fatigue limit load	Limiting speed	Speed rating	Mass	Designation
d	D	B	dyn. C_r	stat. C_{0r}	C_{ur}	n_G	$n_{\vartheta r}$	m	➤*695|1.12* ➤*696|1.13*
			kN	kN	N	min^{-1}	min^{-1}	≈ kg	
1 000	1 220	165	4 900	14 900	980 000	510	231	399	**238/1000-K-MB**
	1 220	165	4 900	14 900	980 000	510	231	413	**238/1000-MB**
	1 220	218	6 700	21 500	1 240 000	405	104	546	**248/1000-B-MB**
	1 320	315	11 400	31 000	1 890 000	370	95	1 192	**249/1000-B-K30-MB**
	1 320	315	11 400	31 000	1 890 000	370	95	1 212	**249/1000-B-MB**
	1 420	308	13 100	31 500	1 620 000	405	206	1 590	**230/1000-K-MB**
	1 420	308	13 100	31 500	1 620 000	405	206	1 590	**230/1000-MB**
	1 420	412	19 100	42 000	2 850 000	325	137	2 145	**240/1000-BEA-XL-MB1**
	1 420	412	19 100	42 000	2 850 000	325	137	2 115	**240/1000-BEA-XL-K30-MB1**
	1 580	462	22 000	51 000	3 200 000	320	126	3 474	**231/1000-B-K-MB**
	1 580	462	22 000	51 000	3 200 000	320	126	3 474	**231/1000-B-MB**
	1 580	580	27 500	64 000	4 050 000	275	70	4 379	**241/1000-B-K30-MB**
	1 580	580	27 500	64 000	4 050 000	275	70	4 429	**241/1000-B-MB**
1 060	1 280	165	5 100	16 100	1 000 000	480	213	421	**238/1060-B-K-MB**
	1 280	165	5 100	16 100	1 000 000	480	213	435	**238/1060-B-MB**
	1 280	218	7 000	22 700	1 300 000	385	97	599	**248/1060-B-MB**
	1 400	250	9 900	26 000	1 450 000	420	202	1 060	**239/1060-K-MB1**
	1 400	250	9 900	26 000	1 450 000	420	202	1 081	**239/1060-MB1**
	1 400	335	12 900	36 000	2 290 000	345	84	1 411	**249/1060-B-K30-MB**
	1 400	335	12 900	36 000	2 290 000	345	84	1 436	**249/1060-B-MB**
	1 500	325	13 700	34 000	2 160 000	375	193	1 896	**230/1060-B-MB**
	1 500	438	21 400	47 500	3 150 000	305	126	2 525	**240/1060-BEA-XL-MB1**
	1 500	438	21 400	47 500	3 150 000	305	126	2 470	**240/1060-BEA-XL-K30-MB1**
1 120	1 360	243	8 000	26 000	1 490 000	365	90	791	**248/1120-B-MB**
	1 460	335	12 800	35 500	2 220 000	340	83	1 518	**249/1120-B-K30-MB**
	1 460	335	12 800	35 500	2 220 000	340	83	1 545	**249/1120-B-MB**
	1 580	345	14 900	37 500	2 300 000	350	181	2 210	**230/1120-B-MB**
	1 580	462	21 800	58 000	3 500 000	285	116	2 920	**240/1120-BEA-XL-MB1**
	1 580	462	21 800	58 000	3 500 000	285	116	2 884	**240/1120-BEA-XL-K30-MB1**

medias *https://www.schaeffler.de/std/1F9A*

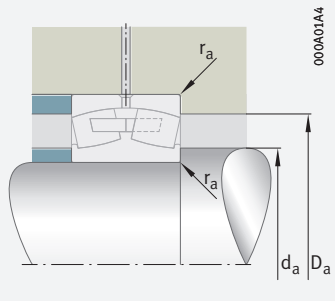

Mounting dimensions

Dimensions					Mounting dimensions			Calculation factors			
d	r min.	D_1 ≈	d_s	n_s	d_a min.	D_a max.	r_a max.	e	Y_1	Y_2	Y_0
1 000	6	1 158	9,5	17,7	1 023	1 197	5	0,12	5,72	8,51	5,59
	6	1 158	9,5	17,7	1 023	1 197	5	0,12	5,72	8,51	5,59
	6	1 151,4	9,5	17,7	1 023	1 197	5	0,16	4,28	6,37	4,19
	7,5	1 218,4	12,5	23,5	1 028	1 292	6	0,22	3,01	4,48	2,94
	7,5	1 218,4	12,5	23,5	1 028	1 292	6	0,22	3,01	4,48	2,94
	7,5	1 300,3	12,5	23,5	1 028	1 392	6	0,21	3,2	4,77	3,13
	7,5	1 300,3	12,5	23,5	1 028	1 392	6	0,21	3,2	4,77	3,13
	7,5	1 282,25	12,5	23,5	1 028	1 392	6	0,26	2,6	3,87	2,54
	7,5	1 282,2	12,5	23,5	1 028	1 392	6	0,26	2,6	3,87	2,54
	12	1 391,8	12,5	23,5	1 048	1 532	10	0,29	2,33	3,47	2,28
	12	1 391,8	12,5	23,5	1 048	1 532	10	0,29	2,33	3,47	2,28
	12	1 372,6	12,5	23,5	1 048	1 532	10	0,35	1,91	2,85	1,87
	12	1 372,6	12,5	23,5	1 048	1 532	10	0,35	1,91	2,85	1,87
1 060	6	1 218,6	9,5	17,7	1 083	1 257	5	0,11	6,18	9,2	6,04
	6	1 218,6	9,5	17,7	1 083	1 257	5	0,11	6,18	9,2	6,04
	6	1 212,7	9,5	17,7	1 083	1 257	5	0,15	4,53	6,75	4,43
	7,5	1 307,6	12,5	23,5	1 088	1 372	6	0,17	4,05	6,04	3,96
	7,5	1 307,6	12,5	23,5	1 088	1 372	6	0,17	4,05	6,04	3,96
	7,5	1 290,7	12,5	23,5	1 088	1 372	6	0,21	3,17	4,72	3,1
	7,5	1 290,7	12,5	23,5	1 088	1 372	6	0,21	3,17	4,72	3,1
	9,5	1 374,6	12,5	23,5	1 094	1 466	8	0,2	3,38	5,03	3,31
	9,5	1 354	12,5	23,5	1 094	1 466	8	0,26	2,57	3,83	2,52
	9,5	1 354	12,5	23,5	1 094	1 466	8	0,26	2,57	3,83	2,52
1 120	6	1 285	9,5	17,7	1 143	1 337	5	0,15	4,47	6,65	4,37
	7,5	1 352,6	12,5	23,5	1 148	1 432	6	0,21	3,27	4,87	3,2
	7,5	1 352,6	12,5	23,5	1 148	1 432	6	0,21	3,27	4,87	3,2
	9,5	1 445,4	12,5	23,5	1 154	1 546	8	0,2	3,42	5,09	3,34
	9,5	1 429,7	12,5	23,5	1 154	1 546	8	0,26	2,57	3,83	2,52
	9,5	1 429,7	12,5	23,5	1 154	1 546	8	0,26	2,57	3,83	2,52

Spherical roller bearings

With cylindrical or tapered bore

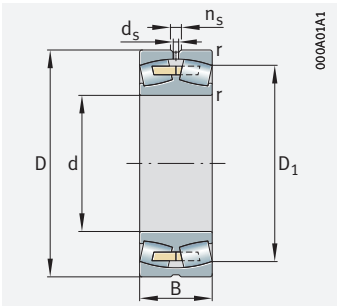

Solid cage, brass or steel; cylindrical bore

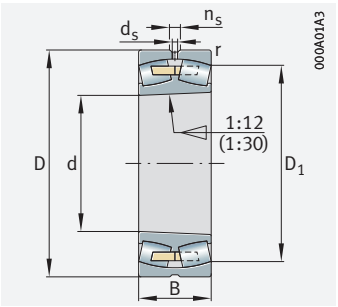

Solid cage, brass or steel; tapered bore

d = 1 180 – 1 800 mm

Main dimensions			Basic load ratings		Fatigue limit load	Limiting speed	Speed rating	Mass	Designation
d	D	B	dyn. C_r	stat. C_{0r}	C_{ur}	n_G	$n_{\vartheta r}$	m	➤*695*|*1.12* ➤*696*|*1.13*
			kN	kN	N	min^{-1}	min^{-1}	≈ kg	
1 180	1 420	180	6 000	19 200	1 130 000	430	187	556	**238/1180-B-K-MB**
	1 420	180	6 000	19 200	1 130 000	430	187	576	**238/1180-B-MB**
	1 420	243	8 400	28 000	1 580 000	335	83	790	**248/1180-B-MB**
	1 540	272	11 300	31 000	1 810 000	370	177	1 340	**239/1180-B-K-MB**
	1 540	272	11 300	31 000	1 810 000	370	177	1 385	**239/1180-B-MB**
	1 540	355	14 700	42 000	2 460 000	305	73	1 751	**249/1180-B-K30-MB**
	1 540	355	14 700	42 000	2 460 000	305	73	1 788	**249/1180-B-MB**
	1 660	355	16 600	42 000	2 550 000	330	166	2 513	**230/1180-B-MB**
1 250	1 500	250	9 000	30 500	1 260 000	320	76	918	**248/1250-B-MB**
	1 630	375	16 000	45 500	2 750 000	295	69	2 096	**249/1250-B-K30-MB**
	1 630	375	16 000	45 500	2 750 000	295	69	2 132	**249/1250-B-MB**
	1 750	375	18 100	46 500	2 750 000	310	154	2 923	**230/1250-B-K-MB**
	1 750	375	18 100	46 500	2 440 000	310	154	2 933	**230/1250-B-MB**
1 320	1 600	280	10 300	35 000	1 950 000	295	71	1 235	**248/1320-B-MB**
	1 720	400	17 700	52 000	3 050 000	265	62	2 515	**249/1320-B-K30-MB**
	1 720	400	17 700	52 000	3 050 000	265	62	2 558	**249/1320-B-MB**
1 400	1 700	300	12 100	41 000	2 280 000	270	63	1 470	**248/1400-B-MB**
1 500	1 820	315	13 000	44 500	2 440 000	255	58	1 660	**248/1500-B-MB**
1 600	1 950	345	16 000	54 000	3 050 000	240	51	2 222	**248/1600-B-MB**
1 700	2 060	355	17 100	60 000	2 950 000	218	46	2 573	**248/1700-MB**
1 800	2 180	375	18 700	67 000	3 500 000	201	42	2 992	**248/1800-B-MB**

medias *https://www.schaeffler.de/std/1F9A*

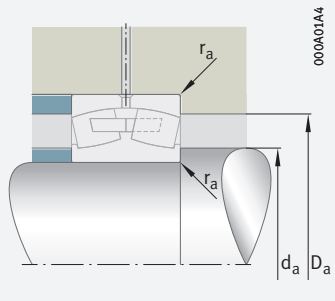

Mounting dimensions

Dimensions					Mounting dimensions			Calculation factors			
d	r min.	D_1 ≈	d_s	n_s	d_a min.	D_a max.	r_a max.	e	Y_1	Y_2	Y_0
1 180	6	1 353,9	9,5	17,7	1 203	1 397	5	0,11	6,18	9,2	6,04
	6	1 353,9	9,5	17,7	1 203	1 397	5	0,11	6,18	9,2	6,04
	6	1 345	9,5	17,7	1 203	1 397	5	0,15	4,53	6,75	4,43
	7,5	1 438,3	12,5	23,5	1 208	1 512	6	0,17	4,05	6,04	3,96
	7,5	1 438,3	12,5	23,5	1 208	1 512	6	0,17	4,05	6,04	3,96
	7,5	1 428,9	12,5	23,5	1 208	1 512	6	0,22	3,14	4,67	3,07
	7,5	1 428,9	12,5	23,5	1 208	1 512	6	0,22	3,14	4,67	3,07
	9,5	1 522,2	12,5	23,5	1 214	1 626	8	0,2	3,38	5,03	3,31
1 250	6	1 423,5	9,5	17,7	1 273	1 477	5	0,14	4,67	6,96	4,57
	7,5	1 510,5	12,5	23,5	1 278	1 602	6	0,21	3,24	4,82	3,16
	7,5	1 510,5	12,5	23,5	1 278	1 602	6	0,21	3,24	4,82	3,16
	9,5	1 607,6	12,5	23,5	1 284	1 716	8	0,2	3,34	4,98	3,27
	9,5	1 607,6	12,5	23,5	1 284	1 716	8	0,2	3,34	4,98	3,27
1 320	7,5	1 512,8	12,5	23,5	1 343	1 577	5	0,15	4,4	6,56	4,31
	7,5	1 595,5	12,5	23,5	1 348	1 640	6	0,2	3,31	4,92	3,23
	7,5	1 595,5	12,5	23,5	1 348	1 640	6	0,2	3,31	4,92	3,23
1 400	7,5	1 606,9	12,5	23,5	1 428	1 672	6	0,16	4,34	6,46	4,25
1 500	7,5	1 722,1	12,5	23,5	1 528	1 792	6	0,15	4,47	6,65	4,37
1 600	7,5	1 846,9	12,5	23,5	1 628	1 922	6	0,15	4,53	6,75	4,43
1 700	7,5	1 946,7	12,5	23,5	1 728	2 032	6	0,15	4,47	6,65	4,37
1 800	9,5	2 060	12,5	23,5	1 834	2 146	8	0,15	4,47	6,65	4,37

Spherical roller bearings

Sealed

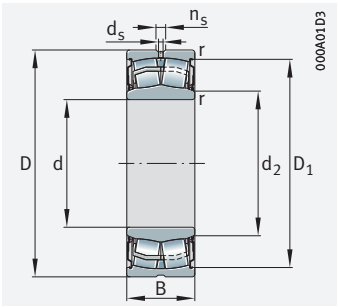

D ≦ 180 mm
with seal 2RSR

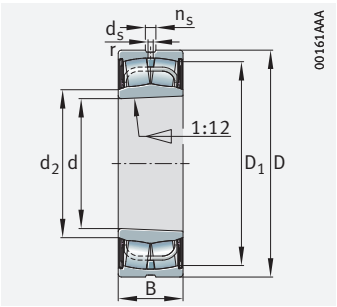

Tapered bore;
with seal

d = 25 – 75 mm

Main dimensions			Basic load ratings		Fatigue limit load	Limiting speed	Mass	Designation
d	D	B	dyn. C_r	stat. C_{0r}	C_{ur}	n_G	m	➤*695*|*1.12* ➤*696*|*1.13* X-life ➤*684*
			kN	kN	N	min^{-1}	≈ kg	
25	52	23	48,5	42,5	4 900	3 600	0,235	**WS22205-E1-XL-2RSR**
	52	23	48,5	42,5	4 900	3 600	0,235	**WS22205-E1-XL-K-2RSR**
30	62	25	64	57	7 000	3 150	0,4	**WS22206-E1-XL-2RSR**
	62	25	64	57	7 000	3 150	0,4	**WS22206-E1-XL-K-2RSR**
35	72	28	89	81	9 700	2 700	0,6	**WS22207-E1-XL-2RSR**
	72	28	89	81	9 700	2 700	0,6	**WS22207-E1-XL-K-2RSR**
40	80	28	101	91	12 100	2 600	0,7	**WS22208-E1-XL-2RSR**
	80	28	101	91	12 100	2 600	0,7	**WS22208-E1-XL-K-2RSR**
	90	38	156	149	13 500	1 890	1,16	**WS22308-E1-XL-2RSR**
	90	38	156	149	13 500	1 890	1,16	**WS22308-E1-XL-K-2RSR**
45	85	28	104	99	13 000	2 550	0,67	**WS22209-E1-XL-2RSR**
	85	28	104	99	13 000	2 550	0,67	**WS22209-E1-XL-K-2RSR**
50	90	28	109	107	14 600	2 440	0,8	**WS22210-E1-XL-2RSR**
	90	28	109	107	14 600	2 440	0,8	**WS22210-E1-XL-K-2RSR**
55	100	31	129	130	17 700	2 250	1,1	**WS22211-E1-XL-2RSR**
	100	31	129	130	17 700	2 250	1,1	**WS22211-E1-XL-K-2RSR**
	120	49	265	260	24 600	1 460	2,9	**WS22311-E1-XL-2RSR**
	120	49	265	260	24 600	1 460	2,9	**WS22311-E1-XL-K-2RSR**
60	110	34	160	155	20 700	2 030	1,5	**WS22212-E1-XL-2RSR**
	110	34	160	155	20 700	2 030	1,5	**WS22212-E1-XL-K-2RSR**
	130	53	310	310	29 000	1 350	3,4	**WS22312-E1-XL-2RSR**
	130	53	310	310	29 000	1 350	3,4	**WS22312-E1-XL-K-2RSR**
65	120	38	202	210	26 500	1 740	2	**WS22213-E1-XL-2RSR**
	120	38	202	210	26 500	1 740	2	**WS22213-E1-XL-K-2RSR**
70	125	38	211	226	28 500	1 670	2,1	**WS22214-E1-XL-2RSR**
	125	38	211	226	28 500	1 670	2,1	**WS22214-E1-XL-K-2RSR**
	150	60	390	390	37 500	1 210	5,4	**WS22314-E1-XL-2RSR**
	150	60	390	390	37 500	1 210	5,4	**WS22314-E1-XL-K-2RSR**
75	130	38	216	237	30 500	1 630	2,2	**WS22215-E1-XL-2RSR**
	130	38	216	237	30 500	1 630	2,2	**WS22215-E1-XL-K-2RSR**

medias *https://www.schaeffler.de/std/1F9A*

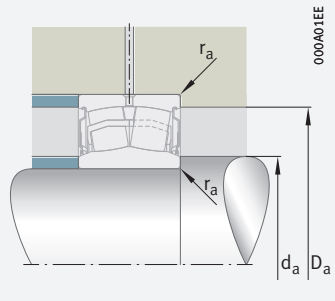

Mounting dimensions

Dimensions						Mounting dimensions			Calculation factors			
d	r min.	D_1 ≈	d_2 ≈	d_s	n_s	d_a min.	D_a max.	r_a max.	e	Y_1	Y_2	Y_0
25	1	46,1	29,8	3,2	4,8	29,8	46,4	1	0,33	2,07	3,09	2,03
	1	46,1	29,8	3,2	4,8	29,8	46,4	1	0,33	2,07	3,09	2,03
30	1	55,5	35	3,2	4,8	35	56,4	1	0,3	2,26	3,37	2,21
	1	55,5	35	3,2	4,8	35	56,4	1	0,3	2,26	3,37	2,21
35	1,1	64,2	40,1	3,2	4,8	40,1	65	1	0,31	2,21	3,29	2,16
	1,1	64,2	40,1	3,2	4,8	40,1	65	1	0,31	2,21	3,29	2,16
40	1,1	72,6	45,9	3,2	4,8	45,9	73	1	0,27	2,49	3,71	2,43
	1,1	72,6	45,9	3,2	4,8	45,9	73	1	0,27	2,49	3,71	2,43
	1,5	78,1	48,9	3,2	6,5	48,9	81	1,5	0,36	1,86	2,77	1,82
	1,5	78,1	48,9	3,2	6,5	48,9	81	1,5	0,36	1,86	2,77	1,82
45	1,1	77,8	51,4	3,2	4,8	51,4	78	1	0,25	2,74	4,08	2,68
	1,1	77,8	51,4	3,2	4,8	51,4	78	1	0,25	2,74	4,08	2,68
50	1,1	83,1	56	3,2	4,8	56	83,1	1	0,23	2,95	4,4	2,89
	1,1	83,1	56	3,2	4,8	56	83,1	1	0,23	2,95	4,4	2,89
55	1,5	91,9	63,5	3,2	4,8	63,5	91,9	1,5	0,21	3,17	4,72	3,1
	1,5	91,9	63,5	3,2	4,8	63,5	91,9	1,5	0,21	3,17	4,72	3,1
	2	104,1	64,8	3,2	6,5	64,8	109	2	0,36	1,89	2,81	1,84
	2	104,1	64,8	3,2	6,5	64,8	109	2	0,36	1,89	2,81	1,84
60	1,5	100,7	67,6	3,2	6,5	67,6	101	1,5	0,23	2,98	4,44	2,92
	1,5	100,7	67,6	3,2	6,5	67,6	101	1,5	0,23	2,98	4,44	2,92
	2,1	110,2	71,4	3,2	6,5	71,4	118	2,1	0,35	1,91	2,85	1,87
	2,1	110,2	71,4	3,2	6,5	71,4	118	2,1	0,35	1,91	2,85	1,87
65	1,5	110,2	76,2	3,2	6,5	76,2	111	1,5	0,24	2,81	4,19	2,75
	1,5	110,2	76,2	3,2	6,5	76,2	111	1,5	0,24	2,81	4,19	2,75
70	1,5	113,5	82,5	3,2	6,5	82,5	116	1,5	0,23	2,95	4,4	2,89
	1,5	113,5	82,5	3,2	6,5	82,5	116	1,5	0,23	2,95	4,4	2,89
	2,1	130,4	80,7	4,8	9,5	80,7	138	2,1	0,34	2	2,98	1,96
	2,1	130,4	80,7	4,8	9,5	80,7	138	2,1	0,34	2	2,98	1,96
75	1,5	120,2	85,6	3,2	6,5	84	121	1,5	0,22	3,1	4,62	3,03
	1,5	120,2	85,6	3,2	6,5	84	121	1,5	0,22	3,1	4,62	3,03

Spherical roller bearings

Sealed

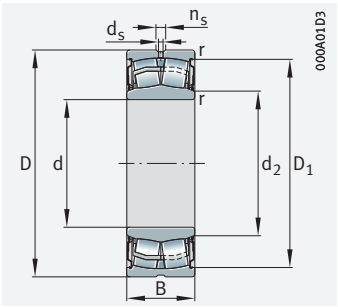

D ≦ 180 mm
with seal 2RSR

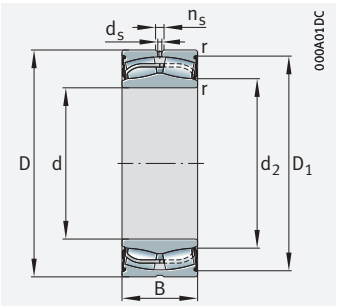

180 mm < D ≦ 320 mm
with seal 2VSR

d = 80 – 170 mm

Main dimensions			Basic load ratings		Fatigue limit load	Limiting speed	Mass	Designation
d	D	B	dyn. C_r	stat. C_{0r}	C_{ur}	n_G	m	➤*695*|*1.12* ➤*696*|*1.13* X-life ➤*684*
			kN	kN	N	min^{-1}	≈ kg	
80	140	40	250	270	34 500	1 540	2,7	**WS22216-E1-XL-2RSR**
	140	40	250	270	34 500	1 540	2,7	**WS22216-E1-XL-K-2RSR**
85	150	44	305	325	39 000	1 420	3,4	**WS22217-E1-XL-2RSR**
	150	44	305	325	39 000	1 420	3,4	**WS22217-E1-XL-K-2RSR**
90	160	48	345	375	43 500	1 300	4,3	**WS22218-E1-XL-2RSR**
	160	48	345	375	43 500	1 300	4,3	**WS22218-E1-XL-K-2RSR**
100	180	55	430	475	53 000	1 140	6,3	**WS22220-E1-XL-2RSR**
	180	55	430	475	53 000	1 140	6,25	**WS22220-E1-XL-K-2RSR**
110	180	69	530	750	86 000	830	6,8	**24122-BE-XL-2VSR**
	200	63	550	600	64 000	1 020	9	**WS22222-E1-XL-2RSR**
	200	63	550	600	64 000	1 020	9	**WS22222-E1-XL-K-2RSR**
120	180	60	450	690	86 000	860	5,6	**24024-BE-XL-2VSR**
	200	80	680	950	103 000	740	10,4	**24124-BE-XL-2VSR**
	215	69	640	740	73 000	920	11,3	**WS22224-E1-XL-2RSR**
	215	69	640	740	73 000	920	11,3	**WS22224-E1-XL-K-2RSR**
130	200	69	570	860	103 000	780	8,4	**24026-BE-XL-2VSR**
	210	80	710	1 050	112 000	700	11	**24126-BE-XL-2VSR**
	230	75	760	890	81 000	840	12,8	**WS22226-E1-XL-2RSR**
	230	75	760	890	81 000	840	12,8	**WS22226-E1-XL-K-2RSR**
140	210	69	590	930	111 000	740	8,4	**24028-BE-XL-2VSR**
	225	85	800	1 190	127 000	660	13,8	**24128-BE-XL-2VSR**
	250	68	830	970	100 000	820	14,1	**22228-E1A-XL-2RSR-M**
	250	68	830	970	100 000	820	13,7	**22228-E1A-XL-K-2RSR-M**
150	225	75	680	1 090	125 000	690	11,1	**24030-BE-XL-2VSR**
	250	100	1 050	1 520	153 000	590	20,6	**24130-BE-XL-2VSR**
160	240	80	770	1 240	140 000	640	12,7	**24032-BE-XL-2VSR**
	270	109	1 220	1 800	173 000	540	25,4	**24132-BE-XL-2VSR**
	290	80	1 080	1 300	128 000	700	23,3	**22232-E1A-XL-2RSR-M**
	290	80	1 080	1 300	128 000	700	22,4	**22232-E1A-XL-K-2RSR-M**
170	260	90	940	1 480	162 000	600	17,2	**24034-BE-XL-2VSR**
	280	109	1 260	1 900	184 000	530	26,4	**24134-BE-XL-2VSR**

medias *https://www.schaeffler.de/std/1F9A*

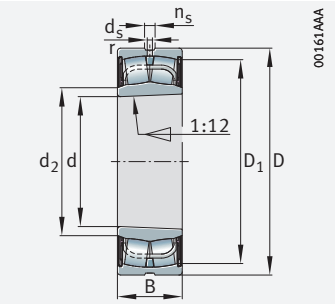

Tapered bore; with seal

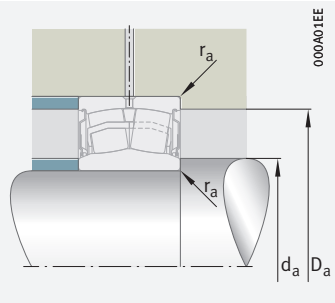

Mounting dimensions

Dimensions						Mounting dimensions			Calculation factors			
d	r	D_1	d_2	d_s	n_s	d_a	D_a	r_a	e	Y_1	Y_2	Y_0
	min.	≈	≈			min.	max.	max.				
80	2	128,6	91,3	3,2	6,5	91	129	2	0,22	3,14	4,67	3,07
	2	128,6	91,3	3,2	6,5	91	129	2	0,22	3,14	4,67	3,07
85	2	137,1	96,5	3,2	6,5	96	139	2	0,22	3,04	4,53	2,97
	2	137,1	96,5	3,2	6,5	96	139	2	0,22	3,04	4,53	2,97
90	2	146,7	101,4	3,2	6,5	101	149	2	0,23	2,9	4,31	2,83
	2	146,7	101,4	3,2	6,5	101	149	2	0,23	2,9	4,31	2,83
100	2,1	169,1	115	4,8	9,5	112	169,1	2,1	0,24	2,84	4,23	2,78
	2,1	169,1	115	4,8	9,5	112	169,1	2,1	0,24	2,84	4,23	2,78
110	2	167,1	120,8	3,2	6,5	121	169	2	0,34	1,96	2,92	1,92
	2,1	182,6	124,9	4,8	9,5	122	188	2,1	0,25	2,71	4,04	2,65
	2,1	182,6	124,9	4,8	9,5	122	188	2,1	0,25	2,71	4,04	2,65
120	2	170,5	131	3,2	6,5	128,8	171,2	2	0,29	2,33	3,47	2,28
	2	184,5	131,1	3,2	6,5	131	189	2	0,37	1,84	2,74	1,8
	2,1	203,4	136,8	6,3	12,2	132	203,4	2,1	0,25	2,71	4,04	2,65
	2,1	203,4	136,8	6,3	12,2	132	203,4	2,1	0,25	2,71	4,04	2,65
130	2	187,2	142,1	3,2	6,5	138,8	191,2	2	0,31	2,21	3,29	2,16
	2	196,1	143,1	3,2	6,5	141	199	2	0,34	1,98	2,94	1,93
	3	217,5	146,6	6,3	12,2	144	217,5	2,5	0,26	2,62	3,9	2,56
	3	217,5	146,6	6,3	12,2	144	217,5	2,5	0,26	2,62	3,9	2,56
140	2	198,5	153,3	3,2	6,5	148,8	201,2	2	0,28	2,37	3,53	2,32
	2,1	209,9	153,5	4,8	9,5	152	213	2,1	0,34	1,99	2,96	1,94
	3	–	–	6,3	12,2	154	236	2,5	0,24	2,81	4,19	2,75
	3	–	–	6,3	12,2	154	236	2,5	0,24	2,81	4,19	2,75
150	2,1	213,2	164	3,2	6,5	160,2	214,8	2,1	0,29	2,32	3,45	2,26
	2,1	228,9	163,1	4,8	9,5	162	238	2,1	0,37	1,83	2,72	1,79
160	2,1	226,9	174,8	4,8	9,5	170,2	229,8	2,1	0,29	2,32	3,45	2,26
	2,1	245,6	175,5	4,8	9,5	172	258	2,1	0,37	1,8	2,69	1,76
	3	–	–	8	15	174	276	2,5	0,24	2,79	4,15	2,73
	3	–	–	8	15	174	276	2,5	0,24	2,79	4,15	2,73
170	2,1	243,3	184,8	4,8	9,5	180,2	249,8	2,1	0,31	2,2	3,27	2,15
	2,1	257,3	186,7	4,8	9,5	182	268	2,1	0,36	1,9	2,83	1,86

Spherical roller bearings

Sealed

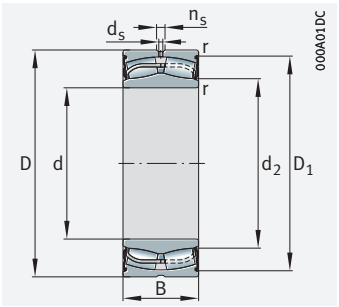

D ≦ 370 mm
with seal 2RSR or 2VSR

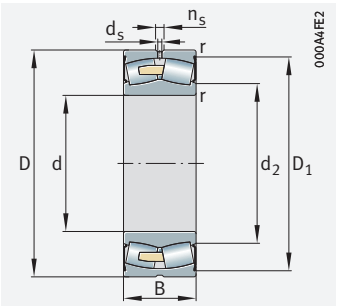

320 mm < D ≦ 650 mm
with seal 2RSR

d = 180 – 400 mm

Main dimensions			Basic load ratings		Fatigue limit load	Limiting speed	Mass	Designation
d	D	B	dyn. C_r	stat. C_{0r}	C_{ur}	n_G	m	➤*695* | *1.12* ➤*696* | *1.13* X-life ➤*684*
			kN	kN	N	min^{-1}	≈ kg	
180	280	100	1 130	1 770	185 000	550	22,7	**24036-BE-XL-2VSR**
	300	118	1 460	2 170	208 000	500	33,2	**24136-BE-XL-2VSR**
190	290	100	1 160	1 860	197 000	540	23,7	**24038-BE-XL-2VSR**
	320	128	1 680	2 550	232 000	460	41,5	**24138-BE-XL-2VSR**
200	310	109	1 350	2 150	221 000	500	30,1	**24040-BE-XL-2VSR**
	340	112	1 620	2 270	194 000	510	41,5	**23140-BE-XL-2RSR**
	340	112	1 620	2 270	194 000	510	40,9	**23140-BE-XL-K-2RSR**
	340	140	1 880	2 800	260 000	445	49,5	**24140-BE-XL-2VSR**
220	370	120	1 860	2 700	224 000	465	52,2	**23144-BE-XL-2RSR**
	370	120	1 860	2 700	224 000	465	50,5	**23144-BE-XL-K-2RSR**
	370	150	2 190	3 250	300 000	410	64	**24144-BE-XL-2VSR**
240	400	128	2 140	3 150	255 000	425	64	**23148-BE-XL-2RSR**
	400	128	2 140	3 150	255 000	425	62	**23148-BE-XL-K-2RSR**
260	440	144	2 600	3 900	300 000	375	90	**23152-BE-XL-2RSR**
	440	144	2 600	3 900	300 000	375	87,2	**23152-BE-XL-K-2RSR**
280	460	146	2 750	4 200	325 000	355	96,3	**23156-BE-XL-2RSR**
	460	146	2 750	4 200	325 000	355	93,1	**23156-BE-XL-K-2RSR**
300	500	160	3 250	4 950	375 000	325	130	**23160-BEA-XL-2RSR-MB1**
	500	160	3 250	4 950	375 000	325	126	**23160-BEA-XL-K-2RSR-MB1**
320	540	176	3 800	5 900	425 000	290	165	**23164-BEA-XL-2RSR-MB1**
	540	176	3 800	5 900	425 000	290	161	**23164-BEA-XL-K-2RSR-MB1**
340	580	190	4 400	6 600	480 000	270	210	**23168-BEA-XL-2RSR-MB1**
	580	190	4 400	6 600	480 000	270	204	**23168-BEA-XL-K-2RSR-MB1**
360	600	192	4 550	7 100	510 000	260	222	**23172-BEA-XL-2RSR-MB1**
	600	192	4 550	7 100	510 000	260	215	**23172-BEA-XL-K-2RSR-MB1**
380	620	194	4 750	7 600	540 000	248	234	**23176-BEA-XL-2RSR-MB1**
	620	194	4 750	7 600	540 000	248	227	**23176-BEA-XL-K-2RSR-MB1**
400	650	200	5 100	8 100	590 000	236	255	**23180-BEA-XL-2RSR-MB1**
	650	200	5 100	8 100	590 000	236	246	**23180-BEA-XL-K-2RSR-MB1**

medias *https://www.schaeffler.de/std/1F9A*

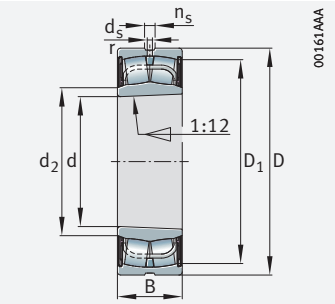

Tapered bore; with seal

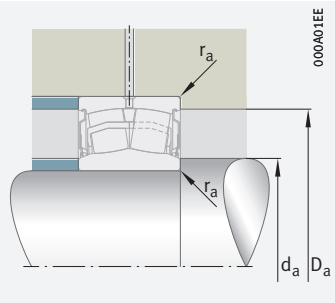

Mounting dimensions

Dimensions						Mounting dimensions			Calculation factors			
d	r min.	D_1 ≈	d_2 ≈	d_s	n_s	d_a min.	D_a max.	r_a max.	e	Y_1	Y_2	Y_0
180	2,1	259,6	195,6	4,8	9,5	190,2	269,8	2,1	0,32	2,1	3,13	2,06
	3	276,3	196,2	6,3	12,2	194	286	2,5	0,36	1,86	2,77	1,82
190	2,1	271,1	206,2	4,8	9,5	200,2	279,8	2,1	0,31	2,2	3,27	2,15
	3	292,6	208	6,3	12,2	204	306	2,5	0,37	1,82	2,7	1,78
200	2,1	287,8	217	6,3	12,2	210,2	299,8	2,1	0,32	2,13	3,17	2,08
	3	319	224,6	9,5	17,7	214	326	2,5	0,3	2,25	3,34	2,2
	3	319	224,6	9,5	17,7	214	326	2,5	0,3	2,25	3,34	2,2
	3	309,5	216,2	6,3	12,2	214	326	2,5	0,39	1,71	2,54	1,67
220	4	345	249	9,5	17,7	237	353	3	0,29	2,3	3,42	2,25
	4	345	249	9,5	17,7	237	353	3	0,29	2,3	3,42	2,25
	4	338,5	236,2	6,3	12,2	237	353	3	0,39	1,74	2,59	1,7
240	4	374	269	9,5	17,7	257	383	3	0,29	2,35	3,5	2,3
	4	374	269	9,5	17,7	257	383	3	0,29	2,35	3,5	2,3
260	4	412	295	9,5	17,7	277	423	3	0,3	2,26	3,37	2,21
	4	412	295	9,5	17,7	277	423	3	0,3	2,26	3,37	2,21
280	5	431	315	9,5	17,7	300	440	4	0,28	2,37	3,53	2,32
	5	431	315	9,5	17,7	300	440	4	0,28	2,37	3,53	2,32
300	5	436,8	–	9,5	17,7	320	480	4	0,29	2,3	3,42	2,25
	5	436,8	–	9,5	17,7	320	480	4	0,29	2,3	3,42	2,25
320	5	470,5	–	12,5	23,5	340	520	4	0,3	2,26	3,37	2,21
	5	470,5	–	12,5	23,5	340	520	4	0,3	2,26	3,37	2,21
340	5	503,9	–	12,5	23,5	360	560	4	0,3	2,23	3,32	2,18
	5	503,9	–	12,5	23,5	360	560	4	0,3	2,23	3,32	2,18
360	5	524,5	–	12,5	23,5	380	580	4	0,29	2,3	3,42	2,25
	5	524,5	–	12,5	23,5	380	580	4	0,29	2,3	3,42	2,25
380	5	544,9	–	12,5	23,5	400	600	4	0,28	2,37	3,53	2,32
	5	544,9	–	12,5	23,5	400	600	4	0,28	2,37	3,53	2,32
400	6	573,3	–	12,5	23,5	426	624	5	0,28	2,41	3,59	2,35
	6	573,3	–	12,5	23,5	426	624	5	0,28	2,41	3,59	2,35

Spherical roller bearings

With adapter sleeve

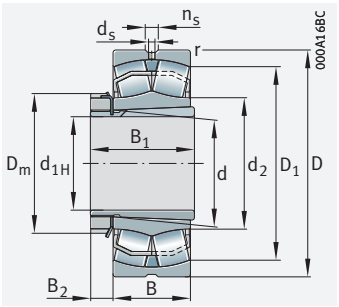

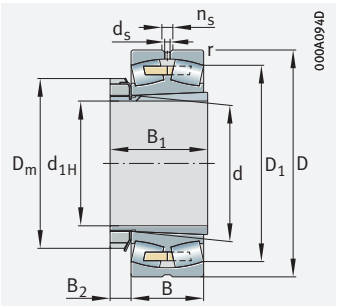

With solid cage, brass or steel

d_{1H} = 20 – 75 mm

Main dimensions				Basic load ratings		Fatigue limit load	Limiting speed	Speed rating	Mass m		Designation ➤695|1.12 ➤696|1.13 X-life ➤684	
d_{1H}	d	D	B	dyn. C_r kN	stat. C_{0r} kN	C_{ur} N	n_G min^{-1}	$n_{\vartheta r}$ min^{-1}	Bearing ≈ kg	Adapter sleeve ≈ kg	Bearing	Adapter sleeve
20	25	52	18	48,5	42,5	4 900	14 400	9 200	0,175	0,07	**22205-E1-XL-K**	**H305**
25	30	62	20	64	57	7 000	12 500	7 800	0,275	0,11	**22206-E1-XL-K**	**H306**
30	35	72	23	89	81	9 700	10 700	7 000	0,434	0,153	**22207-E1-XL-K**	**H307**
	35	80	21	83	74	8 300	10 900	6 800	0,496	0,153	**21307-E1-XL-K-TVPB**	**H307**
35	40	80	23	101	91	12 100	10 500	6 200	0,528	0,192	**22208-E1-XL-K**	**H308**
	40	90	23	109	107	14 600	9 800	5 200	0,749	0,192	**21308-E1-XL-K**	**H308**
	40	90	33	156	149	13 500	7 600	5 500	1	0,23	**22308-E1-XL-K**	**H2308**
40	45	85	23	104	99	13 000	10 100	5 600	0,577	0,253	**22209-E1-XL-K**	**H309**
	45	100	25	129	130	17 700	9 000	4 750	0,999	0,253	**21309-E1-XL-K**	**H309**
	45	100	36	187	183	16 500	6 800	5 000	1,4	0,298	**22309-E1-XL-K**	**H2309**
45	50	90	23	109	107	14 600	9 800	5 100	0,608	0,306	**22210-E1-XL-K**	**H310**
	50	110	27	129	130	17 700	9 000	5 400	1,32	0,306	**21310-E1-XL-K**	**H310**
	50	110	40	229	223	20 700	6 300	4 800	1,9	0,36	**22310-E1-XL-K**	**H2310**
50	55	100	25	129	130	17 700	9 000	4 650	0,825	0,358	**22211-E1-XL-K**	**H311**
	55	120	29	160	155	20 700	8 100	5 100	1,28	0,358	**21311-E1-XL-K**	**H311**
	55	120	43	265	260	24 600	5 800	4 500	2,2	0,435	**22311-E1-XL-K**	**H2311**
55	60	110	28	160	155	20 700	8 100	4 550	1,09	0,401	**22212-E1-XL-K**	**H312**
	60	130	31	211	226	28 500	6 700	4 100	1,89	0,401	**21312-E1-XL-K**	**H312**
	60	130	46	310	310	29 000	5 400	4 200	2,8	0,493	**22312-E1-XL-K**	**H2312**
60	65	120	31	202	210	26 500	7 000	4 200	1,52	0,471	**22213-E1-XL-K**	**H313**
	65	140	33	250	270	34 500	6 200	3 600	2,13	0,471	**21313-E1-XL-K**	**H313**
	65	140	48	350	365	33 500	5 000	3 800	3,5	0,57	**22313-E1-XL-K**	**H2313**
	70	125	31	211	226	28 500	6 700	3 950	1,61	0,74	**22214-E1-XL-K**	**H314**
	70	150	35	250	270	34 500	6 200	3 950	3,13	0,74	**21314-E1-XL-K**	**H314**
	70	150	51	390	390	37 500	4 800	3 700	4,1	0,92	**22314-E1-XL-K**	**H2314**
65	75	130	31	216	237	30 500	6 500	3 700	1,68	0,86	**22215-E1-XL-K**	**H315**
	75	160	37	305	325	39 000	5 700	3 750	3,74	0,86	**21315-E1-XL-K**	**H315**
	75	160	55	445	450	42 000	4 500	3 550	5,3	1,06	**22315-E1-XL-K**	**H2315**
70	80	140	33	250	270	34 500	6 200	3 550	2,08	1,06	**22216-E1-XL-K**	**H316**
	80	170	39	305	325	39 000	5 700	4 050	4,54	1,06	**21316-E1-XL-K**	**H316**
	80	170	58	495	510	46 500	4 250	3 400	6,1	1,31	**22316-E1-XL-K**	**H2316**
75	85	150	36	305	325	39 000	5 700	3 450	2,59	1,21	**22217-E1-XL-K**	**H317**
	85	180	41	345	375	43 500	5 200	3 800	5,3	1,21	**21317-E1-XL-K**	**H317**
	85	180	60	540	560	51 000	4 100	3 200	7,1	1,47	**22317-E1-XL-K**	**H2317**

medias *https://www.schaeffler.de/std/1F9A*

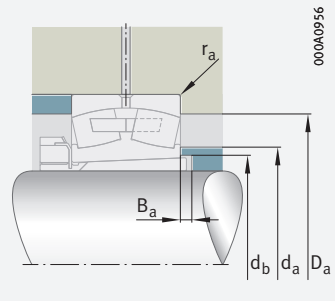

Mounting dimensions

Dimensions									Mounting dimensions					Calculation factors			
d_{1H}	r	D_1	d_2	d_s	n_s	D_m	B_1	B_2	d_a	D_a	d_b	B_a	r_a	e	Y_1	Y_2	Y_0
	min.	≈	≈					≈	max.	max.	min.	min.	max.				
20	1	44,4	31,5	3,2	4,8	38	29	8,25	31	46,4	28	5	1	0,33	2,07	3,09	2,03
25	1	53,7	38,1	3,2	4,8	45	31	8,25	37	54,6	33	5	1	0,3	2,26	3,37	2,21
30	1,1	62,5	43,9	3,2	4,8	52	35	9,25	43	65	39	5	1	0,31	2,21	3,29	2,16
	1,5	66,6	47,4	–	–	52	35	9,25	47	71	39	8	1,5	0,26	2,55	3,8	2,5
35	1,1	70,4	48,8	3,2	4,8	58	36	10,25	48	73	44	5	1	0,27	2,49	3,71	2,43
	1,5	80,8	59,9	3,2	4,8	58	36	10,25	59	81	44	5	1,5	0,23	2,95	4,4	2,89
	1,5	76	52,4	3,2	6,5	58	46	10,25	52	81	45	5	1,5	0,36	1,86	2,77	1,82
40	1,1	75,6	55	3,2	4,8	65	39	11,25	54	78	50	8	1	0,25	2,74	4,08	2,68
	1,5	89,8	67,6	3,2	4,8	65	39	11,25	67	91	50	5	1,5	0,21	3,17	4,72	3,1
	1,5	84,7	58,9	3,2	6,5	65	50	11,25	58	91	50	5	1,5	0,36	1,9	2,83	1,86
45	1,1	80,8	59,9	3,2	4,8	70	42	12,25	59	83	55	10	1	0,23	2,95	4,4	2,89
	2	89,8	67,7	3,2	4,8	70	42	12,25	67	99	55	5	2	0,21	3,17	4,72	3,1
	2	92,6	63	3,2	6,5	70	55	12,25	63	99	56	5	2	0,36	1,86	2,77	1,82
50	1,5	89,8	67,6	3,2	4,8	75	45	12,5	67	91	60	10	1,5	0,21	3,17	4,72	3,1
	2	98,3	71,6	3,2	6,5	75	45	12,5	71	109	60	6	2	0,23	2,98	4,44	2,92
	2	101,4	68,9	3,2	6,5	75	59	12,5	67	109	61	6	2	0,36	1,89	2,81	1,84
55	1,5	98,7	71,6	3,2	6,5	80	47	12,5	71	101	65	8	1,5	0,23	2,98	4,44	2,92
	2,1	112,5	84,4	3,2	6,5	80	47	12,5	84	118	65	5	2,1	0,23	2,95	4,4	2,89
	2,1	110,1	74,8	3,2	6,5	80	62	12,5	74	118	66	5	2,1	0,35	1,91	2,85	1,87
60	1,5	107,3	79,1	3,2	6,5	85	50	13,5	79	111	70	8	1,5	0,24	2,81	4,19	2,75
	2,1	126,8	94,9	3,2	6,5	85	50	13,5	94	128	70	5	2,1	0,22	3,14	4,67	3,07
	2,1	119,3	83,2	4,8	9,5	85	65	13,5	83	128	72	5	2,1	0,34	2	2,98	1,96
	1,5	112,5	84,4	3,2	6,5	92	52	13,5	84	116	75	11	1,5	0,23	2,95	4,4	2,89
	2,1	126,2	94,9	3,2	6,5	92	52	13,5	94	138	75	6	2,1	0,22	3,14	4,67	3,07
	2,1	128	86,7	4,8	9,5	92	68	13,5	86	138	77	5	2,1	0,34	2	2,98	1,96
65	1,5	117,7	89,8	3,2	6,5	98	55	14,5	89	121	80	12	1,5	0,22	3,1	4,62	3,03
	2,1	135,2	99,7	3,2	6,5	98	55	14,5	99	148	80	5	2,1	0,22	3,04	4,53	2,97
	2,1	136,3	92,4	4,8	9,5	98	73	14,5	92	148	82	5	2,1	0,34	1,99	2,96	1,94
70	2	126,8	94,9	3,2	6,5	105	59	16,75	94	129	85	12	2	0,22	3,14	4,67	3,07
	2,1	135,4	99,8	3,2	6,5	105	59	16,75	99	158	85	5	2,1	0,22	3,04	4,53	2,97
	2,1	145,1	98,3	4,8	9,5	105	78	16,75	98	158	88	5	2,1	0,34	1,99	2,96	1,94
75	2	135,4	99,7	3,2	6,5	110	63	17,75	99	139	91	12	2	0,22	3,04	4,53	2,97
	3	143,9	106,1	4,8	9,5	110	63	17,75	106	166	91	6	2,5	0,23	2,9	4,31	2,83
	3	154,2	104,4	4,8	9,5	110	82	17,75	104	166	94	6	2,5	0,33	2,04	3,04	2

Spherical roller bearings

With adapter sleeve

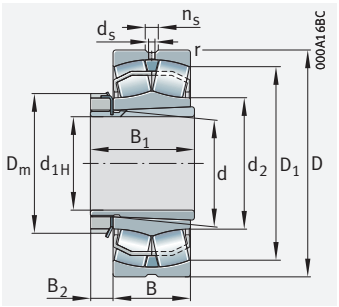

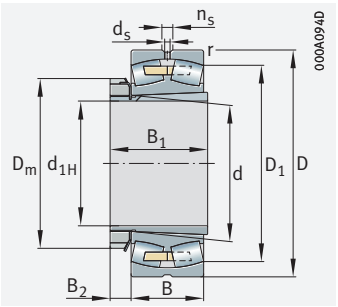

With solid cage, brass or steel

d_{1H} = 80 – 110 mm

Main dimensions				Basic load ratings		Fatigue limit load	Limiting speed	Speed rating	Mass m		Designation ➤695|1.12 ➤696|1.13 X-life ➤684	
d_{1H}	d	D	B	dyn. C_r kN	stat. C_{0r} kN	C_{ur} N	n_G min^{-1}	$n_{\vartheta r}$ min^{-1}	Bearing ≈ kg	Adapter sleeve ≈ kg	Bearing	Adapter sleeve
80	90	160	40	345	375	43 500	5 200	3 400	3,35	1,41	**22218-E1-XL-K**	**H318**
	90	160	52,4	445	520	50 000	4 250	2 650	4,1	1,71	**23218-E1-XL-K-TVPB**	**H2318**
	90	160	52,4	445	520	50 000	4 250	2 650	4,3	1,71	**23218-E1A-XL-K-M**	**H2318**
	90	190	43	380	415	48 500	4 850	3 600	6,26	1,41	**21318-E1-XL-K**	**H318**
	90	190	64	610	630	56 000	3 850	3 000	8,5	1,71	**22318-E1-XL-K**	**H2318**
85	95	170	43	380	415	48 000	4 850	3 300	4,04	1,58	**22219-E1-XL-K**	**H319**
	95	200	45	425	450	48 500	4 600	3 250	6,63	1,58	**21319-E1-XL-K-TVPB**	**H319**
	95	200	67	670	700	61 000	3 700	2 800	9,5	1,95	**22319-E1-XL-K**	**H2319**
90	100	165	52	450	570	54 000	4 000	2 750	4,1	1,81	**23120-E1-XL-K-TVPB**	**H3120**
	100	165	52	450	570	54 000	4 000	2 750	4,2	1,81	**23120-E1A-XL-K-M**	**H3120**
	100	180	46	430	475	53 000	4 550	3 150	4,91	1,76	**22220-E1-XL-K**	**H320**
	100	180	60,3	560	660	61 000	3 750	2 410	6,1	2,2	**23220-E1-XL-K-TVPB**	**H2320**
	100	180	60,3	560	660	61 000	3 750	2 410	6,3	2,2	**23220-E1A-XL-K-M**	**H2320**
	100	215	47	495	530	62 000	4 400	3 050	8,08	1,76	**21320-E1-XL-K-TVPB**	**H320**
	100	215	73	810	920	77 000	3 300	2 380	13	2,2	**22320-E1-XL-K**	**H2320**
100	110	170	45	400	530	54 000	4 200	3 000	3,4	2,25	**23022-E1-XL-K-TVPB**	**H322**
	110	170	45	400	530	54 000	4 200	3 000	3,8	2,25	**23022-E1A-XL-K-M**	**H322**
	110	180	56	530	680	62 000	3 700	2 550	4,9	2,32	**23122-E1-XL-K-TVPB**	**H3122**
	110	180	56	530	680	62 000	3 700	2 550	5,1	2,32	**23122-E1A-XL-K-M**	**H3122**
	110	200	53	550	600	64 000	4 100	3 000	6,99	2,25	**22222-E1-XL-K**	**H322**
	110	200	69,8	710	870	73 000	3 250	2 100	8,8	2,78	**23222-E1-XL-K-TVPB**	**H2322**
	110	200	69,8	710	870	73 000	3 250	2 100	9,3	2,78	**23222-E1A-XL-K-M**	**H2322**
	110	240	50	600	640	70 000	4 000	2 700	10,91	2,25	**21322-E1-XL-K-TVPB**	**H322**
	110	240	80	950	1 070	93 000	3 000	2 130	17,4	2,78	**22322-E1-XL-K**	**H2322**
110	120	180	46	430	580	60 000	3 950	2 800	3,7	2,01	**23024-E1-XL-K-TVPB**	**H3024**
	120	180	46	430	580	60 000	3 950	2 800	4,1	2,01	**23024-E1A-XL-K-M**	**H3024**
	120	200	62	630	800	74 000	3 400	2 290	7,1	2,7	**23124-E1-XL-K-TVPB**	**H3124**
	120	200	62	630	800	74 000	3 400	2 290	7,6	2,7	**23124-E1A-XL-K-M**	**H3124**
	120	215	58	640	740	70 000	3 650	2 700	8,84	2,7	**22224-E1-XL-K**	**H3124**
	120	215	76	820	1 020	82 000	3 000	1 910	11,1	3,24	**23224-E1-XL-K-TVPB**	**H2324**
	120	215	76	820	1 020	82 000	3 000	1 910	11,4	3,24	**23224-E1A-XL-K-M**	**H2324**
	120	260	86	1 080	1 170	105 000	2 850	2 000	22,1	3,24	**22324-E1-XL-K**	**H2324**

medias *https://www.schaeffler.de/std/1F9A*

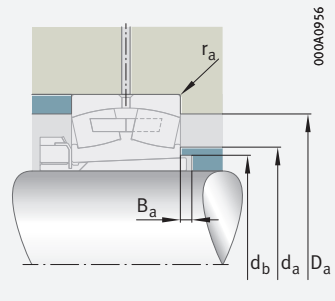

Mounting dimensions

Dimensions									Mounting dimensions					Calculation factors			
d_{1H}	r min.	D_1 ≈	d_2 ≈	d_s	n_s	D_m	B_1	B_2 ≈	d_a max.	D_a max.	d_b min.	B_a min.	r_a max.	e	Y_1	Y_2	Y_0
80	2	143,9	106,1	3,2	6,5	120	65	17,75	106	149	96	10	2	0,23	2,9	4,31	2,83
	2	140	104,1	3,2	6,5	120	86	17,75	104	149	100	18	2	0,31	2,2	3,27	2,15
	2	140	–	3,2	6,5	120	86	17,75	107	149	100	18	2	0,31	2,2	3,27	2,15
	3	152,7	112,6	4,8	9,5	120	65	17,75	112	176	96	6	2,5	0,24	2,87	4,27	2,8
	3	162,5	110,2	6,3	12,2	120	86	17,75	110	176	100	6	2,5	0,33	2,03	3,02	1,98
85	2,1	152,7	112,6	4,8	9,5	125	68	18,75	112	158	102	9	2,1	0,24	2,87	4,27	2,8
	3	169,4	124,3	4,8	9,5	125	68	18,75	124	186	102	7	2,5	0,22	3,04	4,53	2,97
	3	171,2	116	6,3	12,2	125	90	18,75	115	186	105	7	2,5	0,33	2,03	3,02	1,98
90	2	146,3	113,9	3,2	6,5	130	76	19,75	113	154	107	7	2	0,28	2,37	3,53	2,32
	2	146,3	–	3,2	6,5	130	76	19,75	115	154	107	7	2	0,28	2,37	3,53	2,32
	2,1	161,4	119	4,8	9,5	130	71	19,75	118	168	108	8	2,1	0,24	2,84	4,23	2,78
	2,1	156,7	116,7	4,8	9,5	130	97	19,75	116	168	110	19	2,1	0,31	2,15	3,2	2,1
	2,1	156,7	–	4,8	9,5	130	97	19,75	120	168	110	19	2,1	0,31	2,15	3,2	2,1
	3	182	132	4,8	9,5	130	71	19,75	131	201	108	7	2,5	0,22	3,14	4,67	3,07
	3	184,7	130,2	6,3	12,2	130	97	19,75	129	201	110	7	2,5	0,33	2,03	3,02	1,98
100	2	154,6	123,7	3,2	6,5	145	77	20,75	123	161,2	118	14	2	0,23	2,9	4,31	2,83
	2	154,6	–	3,2	6,5	145	77	20,75	123	161,2	118	14	2	0,23	2,9	4,31	2,83
	2	160	124,6	4,8	9,5	145	81	20,75	124	169	117	7	2	0,28	2,39	3,56	2,34
	2	160	–	4,8	9,5	145	81	20,75	127	169	117	7	2	0,28	2,41	3,59	2,35
	2,1	178,7	129,4	4,8	9,5	145	77	20,75	129	188	118	6	2,1	0,25	2,71	4,04	2,65
	2,1	172,7	129,1	4,8	9,5	145	105	20,75	129	188	121	17	2,1	0,33	2,06	3,06	2,01
	2,1	172,7	–	4,8	9,5	145	105	20,75	130	188	121	17	2,1	0,33	2,06	3,06	2,01
	3	202,5	146,4	6,3	12,2	145	77	20,75	146	226	118	9	2,5	0,21	3,24	4,82	3,16
	3	204,9	143,1	8	15	145	105	20,75	135	226	121	7	2,5	0,33	2,07	3,09	2,03
110	2	164,7	133	3,2	6,5	155	72	22	133	171,2	127	7	2	0,22	3,04	4,53	2,97
	2	164,7	–	3,2	6,5	155	72	22	133	171,2	127	7	2	0,22	3,04	4,53	2,97
	2	177,4	136,2	4,8	9,5	155	88	22	136	189	128	7	2	0,28	2,39	3,56	2,34
	2	177,4	–	4,8	9,5	155	88	22	139	189	128	7	2	0,28	2,39	3,56	2,34
	2,1	192	141,9	6,3	12,2	155	88	22	141	203	128	11	2,1	0,25	2,71	4,04	2,65
	2,1	185,5	139	4,8	9,5	155	112	22	139	203	131	17	2,1	0,33	2,03	3,02	1,98
	2,1	185,5	–	4,8	9,5	155	112	22	141	203	131	17	2,1	0,33	2,03	3,02	1,98
	3	222,4	150,7	8	15	155	112	22	150	246	131	7	2,5	0,33	2,06	3,06	2,01

Spherical roller bearings

With adapter sleeve

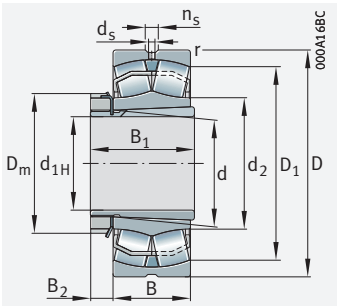

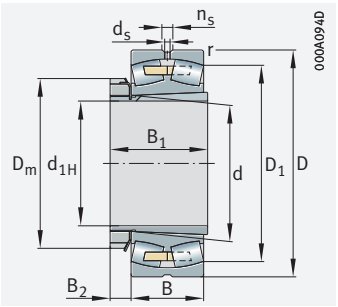

With solid cage, brass or steel

d_{1H} = 115 – 135 mm

Main dimensions				Basic load ratings		Fatigue limit load	Limiting speed	Speed rating	Mass m		Designation ➤695|1.12 ➤696|1.13 X-life ➤684	
d_{1H}	d	D	B	dyn. C_r	stat. C_{0r}	C_{ur}	n_G	$n_{\vartheta r}$	Bearing	Adapter sleeve	Bearing	Adapter sleeve
				kN	kN	N	min^{-1}	min^{-1}	≈ kg	≈ kg		
115	130	200	52	540	730	71 000	3 600	2 600	5,4	2,96	**23026-E1-XL-K-TVPB**	**H3026**
	130	200	52	540	730	71 000	3 600	2 600	5,7	2,96	**23026-E1A-XL-K-M**	**H3026**
	130	210	64	680	890	81 000	3 200	2 110	7,8	3,74	**23126-E1-XL-K-TVPB**	**H3126**
	130	210	64	680	890	81 000	3 200	2 110	8,1	3,74	**23126-E1A-XL-K-M**	**H3126**
	130	230	64	760	890	81 000	3 350	2 500	10,9	3,74	**22226-E1-XL-K**	**H3126**
	130	230	80	910	1 150	91 000	2 850	1 740	12,6	4,69	**23226-E1-XL-K-TVPB**	**H2326**
	130	230	80	910	1 150	91 000	2 850	1 740	13,6	4,69	**23226-E1A-XL-K-M**	**H2326**
	130	280	93	1 250	1 370	120 000	2 650	1 820	27,4	4,69	**22326-E1-XL-K**	**H2326**
125	140	210	53	570	800	77 000	3 450	2 390	5,8	3,3	**23028-E1-XL-K-TVPB**	**H3028**
	140	210	53	570	800	77 000	3 450	2 390	6	3,3	**23028-E1A-XL-K-M**	**H3028**
	140	225	68	760	1 010	90 000	3 000	1 930	9,5	4,46	**23128-E1-XL-K-TVPB**	**H3128**
	140	225	68	760	1 010	90 000	3 000	1 930	10,2	4,46	**23128-E1A-XL-K-M**	**H3128**
	140	250	68	870	1 040	100 000	3 150	2 250	13,7	4,46	**22228-E1-XL-K**	**H3128**
	140	250	88	1 090	1 400	116 000	2 600	1 550	17,1	5,66	**23228-E1-XL-K-TVPB**	**H2328**
	140	250	88	1 090	1 400	116 000	2 600	1 550	17,6	5,66	**23228-E1A-XL-K-M**	**H2328**
	140	300	102	1 460	1 630	135 000	2 420	1 660	34,4	5,66	**22328-E1-XL-K**	**H2328**
135	150	225	56	630	880	87 000	3 250	2 210	7,3	4,02	**23030-E1-XL-K-TVPB**	**H3030**
	150	225	56	630	880	87 000	3 250	2 210	7,3	4,02	**23030-E1A-XL-K-M**	**H3030**
	150	250	80	1 000	1 330	145 000	2 650	1 720	14,5	5,7	**23130-E1-XL-K-TVPB**	**H3130**
	150	250	80	1 000	1 330	145 000	2 650	1 720	15,8	5,7	**23130-E1A-XL-K-M**	**H3130**
	150	270	73	1 010	1 210	114 000	2 900	2 050	17,8	5,7	**22230-E1-XL-K**	**H3130**
	150	270	96	1 280	1 660	133 000	2 400	1 400	22,3	6,76	**23230-E1-XL-K-TVPB**	**H2330**
	150	270	96	1 280	1 660	133 000	2 400	1 400	22,9	6,76	**23230-E1A-XL-K-M**	**H2330**
	150	320	108	1 640	1 850	151 000	2 290	1 520	40,9	6,76	**22330-E1-XL-K**	**H2330**

medias *https://www.schaeffler.de/std/1F9A*

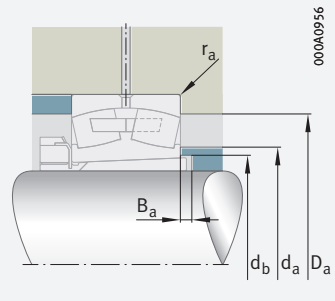

Mounting dimensions

Dimensions									Mounting dimensions					Calculation factors			
d_{1H}	r	D_1	d_2	d_s	n_s	D_m	B_1	B_2	d_a	D_a	d_b	B_a	r_a	e	Y_1	Y_2	Y_0
	min.	≈	≈					≈	max.	max.	min.	min.	max.				
115	2	182,3	145,9	4,8	9,5	165	80	23	145	191,2	137	8	2	0,23	2,95	4,4	2,89
	2	182,3	–	4,8	9,5	165	80	23	146	191,2	137	8	2	0,23	2,95	4,4	2,89
	2	187,3	146	4,8	9,5	165	92	23	145	199	138	8	2	0,28	2,45	3,64	2,39
	2	187,3	–	4,8	9,5	165	92	23	149	199	138	8	2	0,28	2,45	3,64	2,39
	3	205	151,7	6,3	12,2	165	92	23	151	216	138	8	2,5	0,26	2,62	3,9	2,56
	3	199,3	150	4,8	9,5	165	121	23	150	216	142	21	2,5	0,33	2,07	3,09	2,03
	3	–	–	4,8	9,5	165	121	23	152	216	142	21	2,5	0,33	2,07	3,09	2,03
	4	239,5	162,2	9,5	17,7	165	121	23	162	263	142	8	3	0,33	2,06	3,06	2,01
125	2	192,3	155,4	4,8	9,5	180	82	24	155	201,2	147	8	2	0,22	3,07	4,57	3
	2	192,3	–	4,8	9,5	180	82	24	155	201,2	147	8	2	0,22	3,07	4,57	3
	2,1	201	157,1	4,8	9,5	180	97	24	157	213	149	8	2,1	0,27	2,49	3,71	2,43
	2,1	201	–	4,8	9,5	180	97	24	159	213	149	8	2,1	0,27	2,49	3,71	2,43
	3	223,1	164,9	6,3	12,2	180	97	24	164	236	149	8	2,5	0,25	2,67	3,97	2,61
	3	216	162	6,3	12,2	180	131	24	162	236	152	22	2,5	0,33	2,04	3,04	2
	3	216	–	6,3	12,2	180	131	24	162	236	152	22	2,5	0,33	2,04	3,04	2
	4	255,7	173,5	9,5	17,7	180	131	24	169	283	152	8	3	0,34	2	2,98	1,96
135	2,1	206,3	166,6	4,8	9,5	195	87	26	166	214,8	158	8	2,1	0,22	3,1	4,62	3,03
	2,1	206,3	–	4,8	9,5	195	87	26	166	214,8	158	8	2,1	0,22	3,1	4,62	3,03
	2,1	220,8	170,1	6,3	12,2	195	111	26	170	238	160	8	2,1	0,29	2,32	3,45	2,26
	2,1	220,8	–	6,3	12,2	195	111	26	170	238	160	8	2,1	0,29	2,32	3,45	2,26
	3	240,8	177,9	8	15	195	111	26	177	256	160	15	2,5	0,25	2,69	4	2,63
	3	232,6	174	6,3	12,2	195	139	26	174	256	163	20	2,5	0,33	2,02	3	1,97
	3	232,6	–	6,3	12,2	195	139	26	174	256	163	20	2,5	0,33	2,02	3	1,97
	4	273,2	185,3	9,5	17,7	195	139	26	185	303	163	8	3	0,33	2,02	3	1,97

Spherical roller bearings

With adapter sleeve

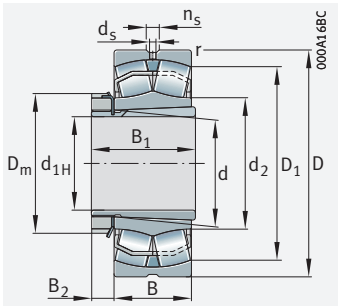

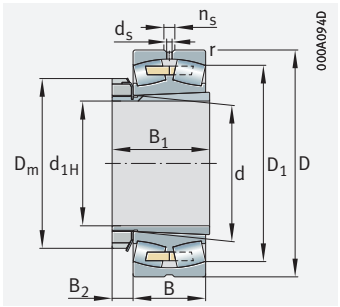

With solid cage, brass or steel

d_{1H} = 140 – 170 mm

Main dimensions				Basic load ratings		Fatigue limit load	Limiting speed	Speed rating	Mass m		Designation ➤695|1.12 ➤696|1.13 X-life ➤684	
d_{1H}	d	D	B	dyn. C_r	stat. C_{0r}	C_{ur}	n_G	$n_{\vartheta r}$	Bearing	Adapter sleeve	Bearing	Adapter sleeve
				kN	kN	N	min^{-1}	min^{-1}	≈ kg	≈ kg		
140	160	240	60	720	1 010	98 000	3 050	2 060	8,7	5,44	**23032-E1-XL-K-TVPB**	**H3032**
	160	240	60	720	1 010	98 000	3 050	2 060	9,4	5,44	**23032-E1A-XL-K-M**	**H3032**
	160	270	86	1 160	1 550	166 000	2 490	1 560	18,5	7,81	**23132-E1-XL-K-TVPB**	**H3132**
	160	270	86	1 160	1 550	166 000	2 490	1 560	18,6	7,81	**23132-E1A-XL-K-M**	**H3132**
	160	290	80	1 150	1 400	129 000	2 650	1 900	22,4	7,81	**22232-E1-XL-K**	**H3132**
	160	290	104	1 460	1 910	150 000	2 210	1 280	27,7	9,32	**23232-E1-XL-K-TVPB**	**H2332**
	160	290	104	1 460	1 910	150 000	2 210	1 280	28,5	9,32	**23232-E1A-XL-K-M**	**H2332**
	160	340	114	1 680	1 990	162 000	2 250	1 420	47,3	9,32	**22332-BE-XL-K**	**H2332**
150	170	260	67	880	1 230	151 000	2 800	1 890	11,9	6,25	**23034-E1-XL-K-TVPB**	**H3034**
	170	260	67	880	1 230	151 000	2 800	1 890	12,5	6,25	**23034-E1A-XL-K-M**	**H3034**
	170	280	88	1 220	1 690	177 000	2 380	1 460	19,9	8,6	**23134-E1-XL-K-TVPB**	**H3134**
	170	280	88	1 220	1 690	177 000	2 380	1 460	19,5	8,6	**23134-E1A-XL-K-M**	**H3134**
	170	310	86	1 320	1 570	144 000	2 550	1 780	27,1	8,6	**22234-E1-XL-K**	**H3134**
	170	310	110	1 640	2 170	168 000	2 090	1 160	33,1	10,4	**23234-E1-XL-K-TVPB**	**H2334**
	170	310	110	1 640	2 170	168 000	2 090	1 160	34,6	10,4	**23234-E1A-XL-K-M**	**H2334**
	170	360	120	1 870	2 220	178 000	2 130	1 320	56,9	10,4	**22334-BE-XL-K**	**H2334**
160	180	250	52	445	840	59 000	3 200	1 850	7,8	6,01	**23936-S-K-MB**	**H3936**
	180	280	74	1 040	1 450	173 000	2 600	1 760	15,6	7,18	**23036-E1-XL-K-TVPB**	**H3036**
	180	280	74	1 040	1 450	173 000	2 600	1 760	16	7,18	**23036-E1A-XL-K-M**	**H3036**
	180	300	96	1 420	1 950	199 000	2 230	1 350	25,9	9,8	**23136-E1-XL-K-TVPB**	**H3136**
	180	300	96	1 420	1 950	199 000	2 230	1 350	25,5	9,8	**23136-E1A-XL-K-M**	**H3136**
	180	320	86	1 360	1 680	152 000	2 470	1 670	28,5	9,8	**22236-E1-XL-K**	**H3136**
	180	320	112	1 720	2 340	178 000	2 010	1 090	36	11,6	**23236-E1-XL-K-TVPB**	**H2336**
	180	320	112	1 720	2 340	178 000	2 010	1 090	37	11,6	**23236-E1A-XL-K-M**	**H2336**
	180	380	126	2 060	2 460	195 000	2 030	1 230	66,6	11,6	**22336-BE-XL-K**	**H2336**
170	190	290	75	1 080	1 550	183 000	2 490	1 660	16,3	7,8	**23038-E1-XL-K-TVPB**	**H3038**
	190	290	75	1 080	1 550	183 000	2 490	1 660	17,7	7,8	**23038-E1A-XL-K-M**	**H3038**
	190	320	104	1 610	2 220	222 000	2 070	1 260	30,3	7,8	**23138-E1-XL-K-TVPB**	**H3138**
	190	320	104	1 610	2 220	222 000	2 070	1 260	32,4	7,8	**23138-E1A-XL-K-M**	**H3138**
	190	340	92	1 360	1 760	164 000	2 480	1 620	36	7,8	**22238-BE-XL-K**	**H3138**
	190	340	120	1 740	2 400	206 000	1 990	1 070	42,6	12,9	**23238-BE-XL-K**	**H2338**
	190	400	132	2 220	2 650	213 000	1 940	1 160	77,2	12,9	**22338-BE-XL-K**	**H2338**

medias *https://www.schaeffler.de/std/1F9A*

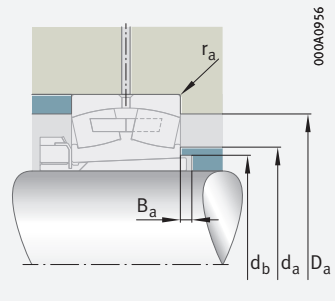

Mounting dimensions

Dimensions									Mounting dimensions					Calculation factors			
d_{1H}	r min.	D_1 ≈	d_2 ≈	d_s	n_s	D_m	B_1	B_2 ≈	d_a max.	D_a max.	d_b min.	B_a min.	r_a max.	e	Y_1	Y_2	Y_0
140	2,1	219,9	177	6,3	12,2	210	93	27,5	177	229,8	168	8	2,1	0,22	3,1	4,62	3,03
	2,1	219,9	–	6,3	12,2	210	93	27,5	177	229,8	168	8	2,1	0,22	3,1	4,62	3,03
	2,1	238,3	183,2	8	15	210	119	27,5	183	258	170	8	2,1	0,29	2,32	3,45	2,26
	2,1	238,3	–	8	15	210	119	27,5	183	258	170	8	2,1	0,29	2,32	3,45	2,26
	3	258,2	190,9	8	15	210	119	27,5	190	276	170	14	2,5	0,26	2,64	3,93	2,58
	3	249,3	186,7	8	15	210	147	27,5	186	276	174	18	2,5	0,34	2	2,98	1,96
	3	249,3	–	8	15	210	147	27,5	186	276	174	18	2,5	0,34	2	2,98	1,96
	4	286,7	201,2	9,5	17,7	210	147	27,5	191	323	174	8	3	0,35	1,94	2,88	1,89
150	2,1	237,2	189,8	6,3	12,2	220	101	28,5	189	249,8	179	8	2,1	0,23	2,98	4,44	2,92
	2,1	–	–	6,3	12,2	220	101	28,5	190	249,8	179	8	2,1	0,23	2,98	4,44	2,92
	2,1	248,1	193,4	8	15	220	122	28,5	193	268	180	8	2,1	0,28	2,37	3,53	2,32
	2,1	–	–	8	15	220	122	28,5	193	268	180	8	2,1	0,28	2,37	3,53	2,32
	4	275,4	199,8	9,5	17,7	220	122	28,5	199	293	180	10	3	0,26	2,6	3,87	2,54
	4	267,4	199,8	8	15	220	154	28,5	199	293	185	18	3	0,33	2,03	3,02	1,98
	4	267,4	–	8	15	220	154	28,5	199	293	185	18	3	0,33	2,03	3,02	1,98
	4	303,9	213,1	9,5	17,7	220	154	28,5	204	343	185	8	3	0,35	1,95	2,9	1,91
160	2	230,9	–	4,8	9,5	230	87	29,5	198	241,2	188	8	2	0,2	3,42	5,09	3,34
	2,1	254,3	201,8	8	15	230	109	29,5	201	269,8	189	8	2,1	0,23	2,9	4,31	2,83
	2,1	254,3	–	8	15	230	109	29,5	201	269,8	189	8	2,1	0,23	2,9	4,31	2,83
	3	264,8	204,1	8	15	230	131	29,5	204	286	191	8	2,5	0,29	2,32	3,45	2,26
	3	264,8	–	8	15	230	131	29,5	204	286	180	8	2,5	0,29	2,32	3,45	2,26
	4	285,9	211,3	9,5	17,7	230	131	29,5	211	303	191	18	3	0,25	2,71	4,04	2,65
	4	277,3	210,6	8	15	230	161	29,5	210	303	195	22	3	0,33	2,07	3,09	2,03
	4	277,3	–	8	15	230	161	29,5	210	303	195	22	3	0,33	2,07	3,09	2,03
	4	320,8	224,9	12,5	23,5	230	161	29,5	217	363	195	8	3	0,34	1,96	2,92	1,92
170	2,1	264,5	211,9	8	15	240	112	30,5	211	279,8	199	9	2,1	0,23	2,98	4,44	2,92
	2,1	264,5	–	8	15	240	112	30,5	211	279,8	199	9	2,1	0,23	2,98	4,44	2,92
	3	281,6	217	8	15	240	112	30,5	216	306	202	9	2,5	0,3	2,28	3,39	2,23
	3	281,6	–	8	15	240	112	30,5	216	306	202	9	2,5	0,3	2,28	3,39	2,23
	4	295,2	225,2	9,5	17,7	240	112	30,5	223	323	202	21	3	0,26	2,6	3,87	2,54
	4	289	222,4	9,5	17,7	240	169	30,5	222	323	206	21	3	0,34	1,98	2,94	1,93
	5	338,1	236,8	12,5	23,5	240	169	30,5	228	380	206	9	4	0,34	1,96	2,92	1,92

Spherical roller bearings

With adapter sleeve

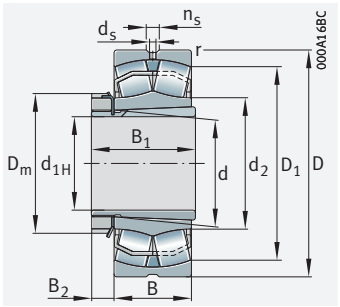

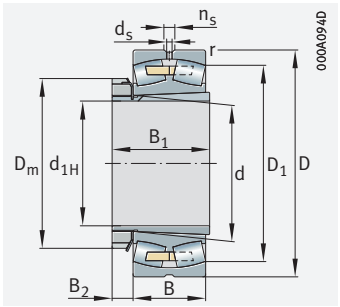

With solid cage, brass or steel

d_{1H} = 180 – 260 mm

Main dimensions				Basic load ratings		Fatigue limit load	Limiting speed	Speed rating	Mass m		Designation ➤695 | 1.12 ➤696 | 1.13 X-life ➤684	
d_{1H}	d	D	B	dyn. C_r kN	stat. C_{0r} kN	C_{ur} N	n_G min^{-1}	$n_{\vartheta r}$ min^{-1}	Bearing ≈ kg	Adapter sleeve ≈ kg	Bearing	Adapter sleeve
180	200	280	60	550	1 070	73 000	2 800	1 650	11,5	8,2	**23940-S-K-MB**	**H3940**
	200	310	82	1 270	1 800	206 000	2 330	1 550	20,8	9,5	**23040-E1-XL-K-TVPB**	**H3040**
	200	310	82	1 270	1 800	206 000	2 330	1 550	21,4	9,5	**23040-E1A-XL-K-M**	**H3040**
	200	340	112	1 610	2 270	193 000	2 040	1 230	40,9	12,5	**23140-BE-XL-K**	**H3140**
	200	360	98	1 520	1 990	180 000	2 330	1 510	42,3	12,5	**22240-BE-XL-K**	**H3140**
	200	360	128	1 940	2 700	226 000	1 870	1 000	57,3	14,2	**23240-BE-XL-K**	**H2340**
	200	420	138	2 440	2 950	232 000	1 830	1 080	87,4	14,2	**22340-BE-XL-K**	**H2340**
200	220	300	60	610	1 240	74 000	2 600	1 460	12,3	8,45	**23944-S-K-MB**	**H3944**
	220	340	90	1 260	1 900	182 000	2 230	1 450	28,5	10,5	**23044-BE-XL-K**	**H3044X**
	220	370	120	1 860	2 700	223 000	1 860	1 080	50,5	16	**23144-BE-XL-K**	**H3144X**
	220	400	108	1 840	2 360	216 000	2 140	1 350	58,3	16	**22244-BE-XL-K**	**H3144X**
	220	400	144	2 380	3 300	270 000	1 700	880	75,3	17,8	**23244-BE-XL-K**	**H2344X**
	220	460	145	2 800	3 400	270 000	1 690	950	114	17,8	**22344-BE-XL-K**	**H2344X**
220	240	320	60	640	1 370	96 000	2 440	1 310	13,4	11,3	**23948-K-MB**	**H3948**
	240	360	92	1 350	2 120	200 000	2 080	1 310	31,6	13,7	**23048-BE-XL-K**	**H3048**
	240	400	128	2 130	3 150	255 000	1 700	970	62	18,7	**23148-BE-XL-K**	**H3148X**
	240	440	120	2 230	2 900	255 000	1 900	1 200	81,8	18,7	**22248-BE-XL-K**	**H3148X**
	240	440	160	2 850	4 000	315 000	1 500	770	102	20,9	**23248-BE-XL-K**	**H2348X**
	240	500	155	3 200	4 050	315 000	1 510	830	148	20,9	**22348-BEA-XL-K-MB1**	**H2348X**
240	260	360	75	940	1 940	111 000	2 100	1 190	22,4	13,6	**23952-K-MB**	**H3952**
	260	400	104	1 670	2 600	239 000	1 850	1 170	45,9	16	**23052-BE-XL-K**	**H3052X**
	260	440	144	2 600	3 900	310 000	1 500	860	87,2	23,6	**23152-BE-XL-K**	**H3152X**
	260	480	130	2 600	3 450	295 000	1 720	1 070	104	23,6	**22252-BEA-XL-K-MB1**	**H3152X**
	260	480	174	3 350	4 750	370 000	1 360	690	134	25,8	**23252-BEA-XL-K-MB1**	**H2352X**
	260	540	165	3 650	4 650	360 000	1 390	740	179	25,8	**22352-BEA-XL-K-MB1**	**H2352X**
260	280	380	75	970	2 040	133 000	2 000	1 100	24,7	15,6	**23956-K-MB**	**H3956**
	280	420	106	1 780	2 850	260 000	1 740	1 090	49,3	18,5	**23056-BE-XL-K**	**H3056**
	280	460	146	2 750	4 200	325 000	1 420	790	93,1	26,3	**23156-BE-XL-K**	**H3156X**
	280	500	130	2 750	3 700	320 000	1 650	990	109	26,3	**22256-BEA-XL-K-MB1**	**H3156X**
	280	500	176	3 550	5 200	395 000	1 280	630	143,7	29,8	**23256-BEA-XL-K-MB1**	**H2356X**
	280	580	175	4 150	5 300	405 000	1 280	670	223	29,8	**22356-BEA-XL-K-MB1**	**H2356X**

medias *https://www.schaeffler.de/std/1F9A*

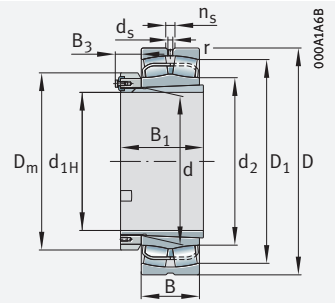

With locknut and retaining bracket

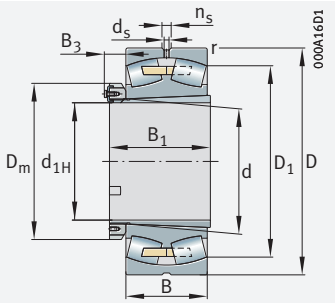

With solid cage, brass or steel; with locknut and retaining bracket

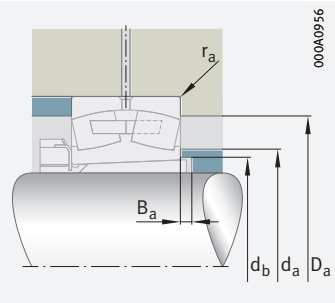

Mounting dimensions

Dimensions										Mounting dimensions					Calculation factors			
d_{1H}	r	D_1	d_2	d_s	n_s	D_m	B_1	B_2	B_3	d_a	D_a	d_b	B_a	r_a	e	Y_1	Y_2	Y_0
	min.	≈	≈					≈	≈	max.	max.	min.	min.	max.				
180	2,1	256,9	–	6,3	12,2	250	98	31,5	–	220	269,8	210	9	2,1	0,2	3,42	5,09	3,34
	2,1	281,6	223,4	8	15	250	120	31,5	–	223	299,8	210	10	2,1	0,23	2,9	4,31	2,83
	2,1	281,6	–	8	15	250	120	31,5	–	223	299,8	210	10	2,1	0,23	2,9	4,31	2,83
	3	295,8	230,4	9,5	17,7	250	150	31,5	–	231	326	212	10	2,5	0,32	2,1	3,13	2,06
	4	310,9	238,2	9,5	17,7	250	150	31,5	–	234	343	212	24	3	0,26	2,57	3,83	2,52
	4	305,3	235	9,5	17,7	250	176	31,5	–	237	343	216	20	3	0,35	1,95	2,9	1,91
	5	355,1	248,8	12,5	23,5	250	176	31,5	–	240	400	216	10	4	0,34	1,98	2,94	1,93
200	2,1	277,4	–	6,3	12,2	260	96	–	39	241	289,8	230	9	2,1	0,18	3,76	5,59	3,67
	3	304,5	248,8	8	15	260	126	–	39	247	327,6	231	12	2,5	0,24	2,81	4,19	2,75
	4	323	254,8	9,5	17,7	260	161	35	–	253	353	233	10	3	0,31	2,15	3,2	2,1
	4	346,6	260,1	9,5	17,7	260	161	35	–	258	383	233	22	3	0,26	2,57	3,83	2,52
	4	338	255,8	9,5	17,7	260	186	35	–	259	383	236	11	3	0,36	1,9	2,83	1,86
	5	391,1	273,4	12,5	23,5	260	186	35	–	272	440	236	10	4	0,33	2,06	3,06	2,01
220	2,1	297,8	–	6,3	12,2	290	101	–	45	261	309,8	250	11	2,1	0,17	4,05	6,04	3,96
	3	324,6	269,5	8	15	290	133	–	45	268	347,6	251	11	2,5	0,23	2,98	4,44	2,92
	4	349,9	275,9	9,5	17,7	290	172	37	–	276	383	254	11	3	0,31	2,18	3,24	2,13
	4	380,4	285,6	12,5	23,5	290	172	37	–	283	423	254	19	3	0,26	2,55	3,8	2,5
	4	370,8	280,8	12,5	23,5	290	199	37	–	284	423	257	6	3	0,36	1,87	2,79	1,83
	5	426,4	–	12,5	23,5	290	199	37	–	296	480	257	11	4	0,32	2,12	3,15	2,07
240	2,1	330,5	–	8	15	310	116	–	45	285	349,8	270	11	2,1	0,19	3,54	5,27	3,46
	4	358,7	295,5	9,5	17,7	310	145	–	45	291	385,4	272	13	3	0,23	2,9	4,31	2,83
	4	382,7	301,7	9,5	17,7	310	190	38	–	302	423	276	11	3	0,32	2,12	3,15	2,07
	5	415,1	–	12,5	23,5	310	190	38	–	308	460	276	25	4	0,26	2,57	3,83	2,52
	5	404,3	–	12,5	23,5	310	211	38	–	309	460	278	2	4	0,36	1,87	2,79	1,83
	6	460,6	–	12,5	23,5	310	211	38	–	322	514	278	11	5	0,31	2,15	3,2	2,1
260	2,1	350	–	8	15	330	121	–	49	303	369,8	290	12	2,1	0,18	3,76	5,59	3,67
	4	379,2	314,3	9,5	17,7	330	152	–	49	310	405,4	292	12	3	0,22	3,01	4,48	2,94
	5	403,4	321,4	9,5	17,7	330	195	39	–	321	440	296	12	4	0,31	2,21	3,29	2,16
	5	436	–	12,5	23,5	330	195	39	–	324	480	296	28	4	0,25	2,71	4,04	2,65
	5	425,4	–	12,5	23,5	330	224	39	–	329	480	299	11	4	0,34	1,96	2,92	1,92
	6	495,5	–	12,5	23,5	330	224	39	–	349	554	299	12	5	0,31	2,18	3,24	2,13

Spherical roller bearings

With adapter sleeve

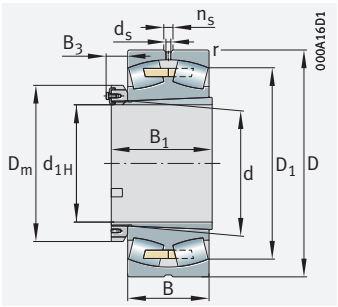

With solid cage, brass or steel; with locknut and retaining bracket

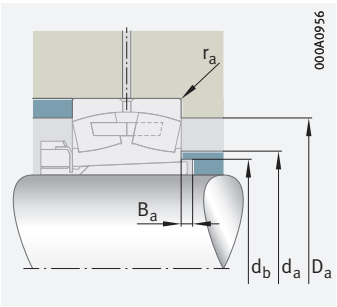

Mounting dimensions

d_{1H} = 280 – 400 mm

Main dimensions				Basic load ratings		Fatigue limit load	Limiting speed	Speed rating	Mass m		Designation ➤695|1.12 ➤696|1.13 X-life ➤684	
d_{1H}	d	D	B	dyn. C_r	stat. C_{0r}	C_{ur}	n_G	$n_{\vartheta r}$	Bearing	Adapter sleeve	Bearing	Adapter sleeve
				kN	kN	N	min^{-1}	min^{-1}	≈ kg	≈ kg		
280	300	420	90	1 270	2 650	170 000	1 780	1 000	39,1	20,9	**23960-B-K-MB**	**H3960**
	300	460	118	2 160	3 450	305 000	1 570	980	68,4	23,7	**23060-BE-XL-K**	**H3060**
	300	500	160	3 250	4 950	375 000	1 300	720	126	31,1	**23160-BEA-XL-K-MB1**	**H3160**
	300	540	140	3 100	4 250	360 000	1 500	900	139	31,1	**22260-BEA-XL-K-MB1**	**H3160**
	300	540	192	4 100	6 100	450 000	1 160	560	187	35,1	**23260-BEA-XL-K-MB1**	**H3260**
	300	620	185	4 650	6 000	450 000	1 190	610	263,6	35,1	**22360-BEA-XL-K-MB1**	**H3260-HG**
300	320	440	90	1 310	2 750	206 000	1 700	930	41	22,1	**23964-K-MB**	**H3964-HG**
	320	480	121	2 300	3 750	330 000	1 480	920	75,6	25,7	**23064-BEA-XL-K-MB1**	**H3064-HG**
	320	540	176	3 800	5 900	425 000	1 170	650	161	36,2	**23164-BEA-XL-K-MB1**	**H3164-HG**
	320	580	150	3 550	4 700	405 000	1 410	850	171	36,2	**22264-BEA-XL-K-MB1**	**H3164-HG**
	320	580	208	4 650	7 000	510 000	1 060	510	229,6	40,6	**23264-BEA-XL-K-MB1**	**H3264-HG**
320	340	520	133	2 700	4 400	375 000	1 360	840	101	30	**23068-BEA-XL-K-MB1**	**H3068-HG**
	340	580	190	4 350	6 600	480 000	1 090	600	204	51,8	**23168-BEA-XL-K-MB1**	**H3168-HG**
	340	620	224	5 300	7 900	580 000	1 000	475	292	57,2	**23268-BEA-XL-K-MB1**	**H3268-HG**
	340	710	212	6 000	8 000	570 000	1 010	500	403	57,2	**22368-BEA-XL-K-MB1**	**H3268-HG**
340	360	480	90	1 440	3 200	216 000	1 540	800	45	25,9	**23972-K-MB**	**H3972-HG**
	360	540	134	2 800	4 650	400 000	1 300	790	104	31,6	**23072-BEA-XL-K-MB1**	**H3072-HG**
	360	600	192	4 550	7 100	510 000	1 040	560	215	54,3	**23172-BEA-XL-K-MB1**	**H3172-HG**
	360	650	232	5 700	8 900	630 000	930	430	330,5	63,8	**23272-BEA-XL-K-MB1**	**H3272-HG**
	360	750	224	6 600	8 800	620 000	710	470	476	63,8	**22372-BEA-XL-K-MB1**	**H3272-HG**
360	380	520	106	1 780	4 000	270 000	1 340	750	66,3	32,1	**23976-K-MB**	**H3976-HG**
	380	560	135	2 900	5 000	420 000	1 230	740	109	36,2	**23076-BEA-XL-K-MB1**	**H3076-HG**
	380	620	194	4 700	7 600	540 000	990	530	227	64,1	**23176-BEA-XL-K-MB1**	**H3176-HG**
	380	680	240	6 200	9 600	680 000	890	400	374	72,4	**23276-BEA-XL-K-MB1**	**H3276-HG**
380	400	540	106	1 830	4 150	280 000	1 290	710	68,2	35,4	**23980-B-K-MB**	**H3980-HG**
	400	600	148	3 400	5 700	480 000	1 150	690	144	41,7	**23080-BEA-XL-K-MB1**	**H3080-HG**
	400	650	200	5 000	8 100	590 000	950	495	246	71,3	**23180-BEA-XL-K-MB1**	**H3180-HG**
	400	720	256	7 000	10 900	750 000	820	370	450	83,7	**23280-BEA-XL-K-MB1**	**H3280-HG**
	400	820	243	7 800	10 500	730 000	850	410	605	83,7	**22380-BEA-XL-K-MB1**	**H3280-HG**
400	420	560	106	1 910	4 450	310 000	1 230	660	72,1	38,6	**23984-K-MB**	**H3984-HG**
	420	620	150	3 650	6 300	520 000	1 090	650	153	45,7	**23084-BEA-XL-K-MB1**	**H3084X-HG**
	420	700	224	6 000	9 600	660 000	860	455	342	88,4	**23184-BEA-XL-K-MB1**	**H3184-HG**
	420	760	272	7 800	12 300	820 000	770	340	537	98,7	**23284-BEA-XL-K-MB1**	**H3284-HG**

medias *https://www.schaeffler.de/std/1F9A*

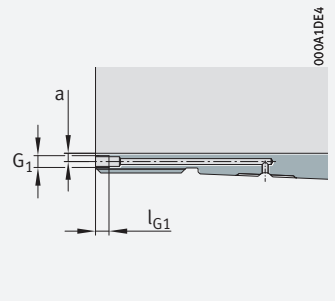

Hydraulic adapter sleeve (..-HG)
Mounting dimensions

Dimensions									Mounting dimensions								Calculation factors			
d_{1H}	r	D_1	d_2	d_s	n_s	D_m	B_1	B_3	d_a	D_a	d_b	B_a	r_a	G_1	a	l_{G1}	e	Y_1	Y_2	Y_0
	min.	≈	≈					≈	max.	max.	min.	min.	max.							
280	3	384,6	–	9,5	17,7	360	140	53	329	407,6	311	12	2,5	–	–	–	0,2	3,42	5,09	3,34
	4	413	340	9,5	17,7	360	168	53	337	445,4	313	12	3	–	–	–	0,23	2,92	4,35	2,86
	5	436,8	–	9,5	17,7	360	208	52	347	480	318	12	4	–	–	–	0,31	2,18	3,24	2,13
	5	470,5	–	12,5	23,5	360	208	52	352	520	318	32	4	–	–	–	0,25	2,71	4,04	2,65
	5	458	–	12,5	23,5	360	240	52	353	520	321	12	4	–	–	–	0,35	1,92	2,86	1,88
	7,5	530,3	–	12,5	23,5	380	240	52	332	588	321	12	6	M6	4,2	7	0,31	2,21	3,29	2,16
300	3	406,2	–	9,5	17,7	380	140	54	349	427,6	332	12	2,5	M6	3,5	7	0,19	3,62	5,39	3,54
	4	433	–	9,5	17,7	380	171	54	357	465,4	334	13	3	M6	3,5	7	0,22	3,01	4,48	2,94
	5	469,3	–	12,5	23,5	380	226	55	369	520	338	13	4	M6	3,5	7	0,32	2,13	3,17	2,08
	5	505,1	–	12,5	23,5	380	226	55	378	560	338	39	4	M6	3,5	7	0,25	2,71	4,04	2,65
	5	490,4	–	12,5	23,5	380	258	55	378	560	343	13	4	M6	3,5	7	0,35	1,91	2,85	1,87
320	5	467,1	–	12,5	23,5	320	187	57	382	502	355	14	4	M6	3,5	7	0,23	2,92	4,35	2,86
	5	502,6	–	12,5	23,5	320	254	70	395	560	360	14	4	M6	3,5	7	0,32	2,1	3,13	2,06
	6	523,5	–	12,5	23,5	320	288	70	402	594	364	14	5	M6	3,5	7	0,36	1,85	2,76	1,81
	7,5	605,95	–	12,5	23,5	440	288	70	372	678	364	14	6	M6	3,5	7	0,31	2,2	3,27	2,15
340	3	447,1	–	9,5	17,7	420	144	57	389	467,6	372	14	2,5	M6	3,5	7	0,17	4,05	6,04	3,96
	5	487,6	–	12,5	23,5	420	188	57	402	522	375	14	4	M6	3,5	7	0,22	3,04	4,53	2,97
	5	523,3	–	12,5	23,5	420	259	73	416	580	380	14	4	M6	3,5	7	0,31	2,18	3,24	2,13
	6	550,8	–	12,5	23,5	420	299	73	424	624	385	14	5	M6	3,5	7	0,36	1,9	2,83	1,86
	7,5	640	–	12,5	23,5	460	299	73	392	718	385	14	6	M6	3,5	7	0,31	2,2	3,27	2,15
360	4	477,6	–	9,5	17,7	450	164	61	415	505,4	393	15	3	M6	3,5	7	0,19	3,58	5,33	3,5
	5	508,1	–	12,5	23,5	450	193	61	422	542	396	15	4	M6	3,5	7	0,21	3,17	4,72	3,1
	5	543,6	–	12,5	23,5	450	264	75	436	600	401	15	4	M6	3,5	7	0,3	2,25	3,34	2,2
	6	578,1	–	12,5	23,5	450	310	75	447	654	405	15	5	M6	3,5	7	0,35	1,92	2,86	1,88
380	4	499	–	9,5	17,7	470	168	65	435	525,4	413	15	3	M6	3,5	7	0,18	3,71	5,52	3,63
	5	541,9	–	12,5	23,5	470	210	65	448	582	417	15	4	M6	3,5	7	0,22	3,07	4,57	3
	6	571,4	–	12,5	23,5	470	272	80	457	624	421	15	5	M6	3,5	7	0,29	2,3	3,42	2,25
	6	611,2	–	12,5	23,5	470	328	80	473	694	427	15	5	M6	3,5	7	0,36	1,9	2,83	1,86
	7,5	701,3	–	12,5	23,5	520	328	80	432	788	427	15	6	M6	3,5	7	0,31	2,21	3,29	2,16
400	4	519,5	–	9,5	17,7	490	168	65	455	545,4	433	15	3	M6	3,5	7	0,18	3,85	5,73	3,76
	5	560,7	–	12,5	23,5	490	212	65	468	602	437	16	4	M6	3,5	7	0,21	3,17	4,72	3,1
	6	609,8	–	12,5	23,5	490	304	88	483	674	443	16	5	M6	3,5	7	0,31	2,18	3,24	2,13
	7,5	643,4	–	12,5	23,5	490	352	88	495	728	449	16	6	M6	3,5	7	0,36	1,89	2,81	1,84

Spherical roller bearings

With adapter sleeve

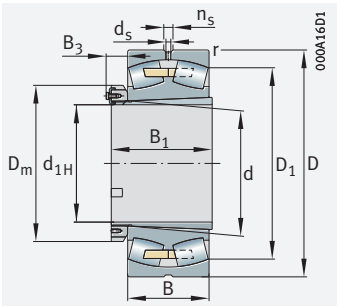

With solid cage, brass or steel; with locknut and retaining bracket

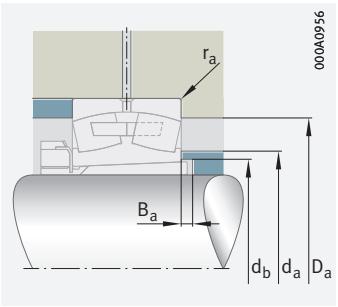

Mounting dimensions

d_{1H} = 410 – 560 mm

Main dimensions				Basic load ratings		C_{ur}	n_G	$n_{\vartheta r}$	Mass m		Designation ➤695|1.12 ➤696|1.13 X-life ➤684	
d_{1H}	d	D	B	dyn. C_r	stat. C_{0r}				Bearing	Adapter sleeve	Bearing	Adapter sleeve
				kN	kN	kN	min^{-1}	min^{-1}	≈ kg	≈ kg		
410	440	600	118	2 230	5 200	305	1 130	620	98,3	59	**23988-K-MB**	**H3988-HG**
	440	650	157	3 950	6 900	560	1 030	610	176	67,7	**23088-BEA-XL-K-MB1**	**H3088-HG**
	440	720	226	6 200	10 200	700	820	430	358	108	**23188-BEA-XL-K-MB1**	**H3188-HG**
	440	790	280	8 300	13 200	880	730	320	592	123	**23288-BEA-XL-K-MB1**	**H3288-HG**
430	460	620	118	2 270	5 400	380	1 080	590	103	62,4	**23992-B-K-MB**	**H3992-HG**
	460	680	163	4 300	7 500	610	980	580	201	71,8	**23092-BEA-XL-K-MB1**	**H3092-HG**
	460	760	240	6 900	11 500	760	770	395	431	118	**23192-BEA-XL-K-MB1**	**H3192-HG**
	460	830	296	9 200	14 700	960	690	295	695	138,9	**23292-BEA-XL-K-MB1**	**H3292-HG**
450	480	650	128	2 550	6 000	470	1 040	570	121	66,8	**23996-B-K-MB**	**H3996-HG**
	480	700	165	4 450	8 000	640	950	550	210	76,8	**23096-BEA-XL-K-MB1**	**H3096-HG**
	480	790	248	7 400	12 400	820	740	375	479	135	**23196-BEA-XL-K-MB1**	**H3196-HG**
	480	870	310	10 000	16 200	1 040	650	275	804	159,2	**23296-BEA-XL-K-MB1**	**H3296-HG**
470	500	670	128	2 600	6 300	410	990	540	124	76,1	**239/500-K-MB**	**H39/500-HG**
	500	720	167	4 700	8 700	760	890	510	223	85,2	**230/500-BEA-XL-K-MB1**	**H30/500-HG**
	500	830	264	8 300	13 900	890	690	350	574	149,9	**231/500-BEA-XL-K-MB1**	**H31/500-HG**
500	530	710	136	2 850	6 900	395	930	500	146	91,6	**239/530-K-MB**	**H39/530-HG**
	530	780	185	5 600	10 100	860	820	475	302	103	**230/530-BEA-XL-K-MB1**	**H30/530-HG**
	530	870	272	8 900	15 000	960	660	325	634	161	**231/530-BEA-XL-K-MB1**	**H31/530-HG**
	530	980	355	12 700	20 400	1 270	570	235	1 183	192	**232/530-BEA-XL-K-MB1**	**H32/530-HG**
530	560	750	140	3 100	7 600	540	880	465	176	98,5	**239/560-B-K-MB**	**H39/560-HG**
	560	820	195	6 100	11 200	940	760	440	350	112	**230/560-BEA-XL-K-MB1**	**H30/560-HG**
	560	920	280	9 700	16 400	1 060	630	300	731	184	**231/560-BEA-XL-K-MB1**	**H31/560-HG**
	560	1 030	355	13 000	21 800	1 380	540	220	1 346	218	**232/560-BEA-XL-K-MB1**	**H32/560-HG**
560	600	800	150	3 450	8 600	640	810	430	210	132,2	**239/600-B-K-MB**	**H39/600-HG**
	600	870	200	6 600	12 300	1 020	710	405	398	152,3	**230/600-BEA-XL-K-MB1**	**H30/600-HG**
	600	920	355	13 300	24 000	1 580	485	159	1 099	249	**241/600-BEA-XL-K30-MB1**	**H241/600-HG**
	600	980	300	10 900	18 600	1 180	580	275	880	241,8	**231/600-BEA-XL-K-MB1**	**H31/600-HG**
	600	1 090	388	15 200	25 500	1 530	495	194	1 584	279	**232/600-BEA-XL-K-MB1**	**H32/600-HG**

medias *https://www.schaeffler.de/std/1F9A*

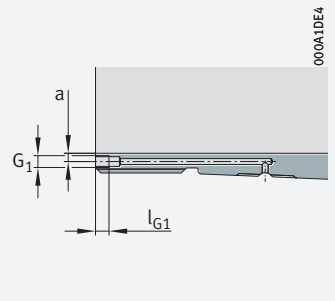

Hydraulic adapter sleeve (..-HG)
Mounting dimensions

Dimensions								Mounting dimensions							Calculation factors			
d_{1H}	r	D_1	d_s	n_s	D_m	B_1	B_3	d_a	D_a	d_b	B_a	r_a	G_1	a	l_{G1}	e	Y_1	Y_2	Y_0
	min.	≈					≈	max.	max.	min.	min.	max.							
410	4	552,8	12,5	23,5	520	189	75	482	585,4	454	17	3	M8	6,5	12	0,18	3,66	5,46	3,58
	6	589,3	12,5	23,5	520	228	75	488	627	458	17	5	M8	6,5	12	0,21	3,17	4,72	3,1
	6	630,2	12,5	23,5	520	307	88	504	694	463	17	5	M8	6,5	12	0,3	2,25	3,34	2,2
	7,5	670,7	12,5	23,5	520	361	88	516	758	469	17	6	M8	6,5	12	0,35	1,91	2,85	1,87
430	4	573,3	12,5	23,5	540	189	75	500	605,4	474	17	3	M8	6,5	12	0,18	3,85	5,73	3,76
	6	616,7	12,5	23,5	540	234	75	509	657	478	17	5	M8	6,5	12	0,21	3,17	4,72	3,1
	7,5	663,4	12,5	23,5	540	326	93	533	728	484	17	6	M8	6,5	12	0,31	2,21	3,29	2,16
	7,5	704,9	12,5	23,5	540	382	93	541	798	490	17	6	M8	6,5	12	0,36	1,9	2,83	1,86
450	5	598,8	12,5	23,5	560	200	75	523	632	496	18	4	M8	6,5	12	0,18	3,76	5,59	3,67
	6	637,3	12,5	23,5	560	237	75	529	677	499	18	5	M8	6,5	12	0,21	3,27	4,87	3,2
	7,5	690,4	12,5	23,5	560	335	93	554	758	505	18	6	M8	6,5	12	0,3	2,23	3,32	2,18
	7,5	737,6	12,5	23,5	560	397	93	568	838	512	18	6	M8	6,5	12	0,36	1,9	2,83	1,86
470	5	619,3	12,5	23,5	580	208	83	543	652	516	18	4	M8	6,5	12	0,17	3,9	5,81	3,81
	6	656,5	12,5	23,5	580	247	83	550	697	519	18	5	M8	6,5	12	0,21	3,24	4,82	3,16
	7,5	723,1	12,5	23,5	580	356	98	578	798	527	18	6	M8	6,5	12	0,31	2,2	3,27	2,15
500	5	656,5	12,5	23,5	630	216	88	576	692	546	18	4	M8	6	12	0,18	3,85	5,73	3,76
	6	708	12,5	23,5	630	265	88	589	757	550	18	5	M8	6	12	0,22	3,1	4,62	3,03
	7,5	760,5	12,5	23,5	630	364	102	609	838	558	18	6	M8	6	12	0,3	2,25	3,34	2,2
	9,5	826,4	12,5	23,5	670	447	102	570	940	566	20	8	M8	6	12	0,37	1,84	2,74	1,8
530	5	693,4	12,5	23,5	650	227	95	609	732	577	18	4	M8	6	12	0,17	3,95	5,88	3,86
	6	745	12,5	23,5	650	282	95	619	797	581	18	5	M8	6	12	0,22	3,1	4,62	3,03
	7,5	806,6	12,5	23,5	650	377	107	644	888	589	18	6	M8	6	12	0,29	2,32	3,45	2,26
	9,5	872,6	12,5	23,5	710	462	107	600	990	596	20	8	M8	6	12	0,36	1,89	2,81	1,84
560	5	740,5	12,5	23,5	700	239	95	653	782	618	20	4	$G^1/_8$	8	12	0,17	3,95	5,88	3,86
	6	793,3	12,5	23,5	700	289	95	661	847	622	20	5	$G^1/_8$	8	12	0,21	3,24	4,82	3,16
	7,5	791,5	12,5	23,5	750	490	108	592	888	–	–	6	$G^1/_8$	8	12	0,37	1,84	2,74	1,8
	7,5	859,35	12,5	23,5	750	399	108	632	948	632	22	6	$G^1/_8$	8	12	0,29	2,3	3,42	2,25
	9,5	924	12,5	23,5	750	487	108	640	1 050	639	22	8	$G^1/_8$	8	12	0,36	1,9	2,83	1,86

Spherical roller bearings

With adapter sleeve

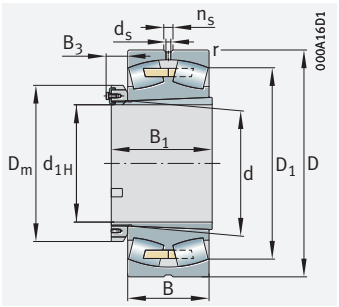

With solid cage, brass or steel; with locknut and retaining bracket

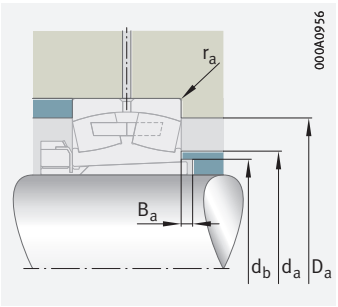

Mounting dimensions

d_{1H} = 600 – 750 mm

Main dimensions				Basic load ratings		C_{ur}	n_G	$n_{\vartheta r}$	Mass m		Designation ➤695|1.12 ➤696|1.13 X-life ➤684	
d_{1H}	d	D	B	dyn. C_r	stat. C_{0r}				Bearing	Adapter sleeve	Bearing	Adapter sleeve
				kN	kN	kN	min^{-1}	min^{-1}	≈ kg	≈ kg		
600	630	850	165	4 100	9 900	720	740	405	283	126,3	**239/630-B-K-MB**	**H39/630-HG**
	630	920	212	7 400	13 700	1 130	670	380	476	143,1	**230/630-BEA-XL-K-MB1**	**H30/630-HG**
	630	1 030	315	12 000	20 600	1 280	540	255	1 025	261,9	**231/630-BEA-XL-K-MB1**	**H31/630-HG**
	630	1 030	400	14 800	27 000	1 720	455	146	1 292	273,1	**241/630-BEA-XL-K30-MB1**	**H241/630-HG**
	630	1 150	412	16 900	28 500	1 680	460	179	1 885	297	**232/630-BEA-XL-K-MB1**	**H32/630-HG**
630	670	900	170	4 300	10 600	760	710	375	310	166	**239/670-B-K-MB**	**H39/670-HG**
	670	980	230	8 400	15 900	1 100	630	480	581	194	**230/670-BEA-XL-K-MB1**	**H30/670-HG**
	670	980	308	10 500	21 100	1 540	510	241	775	218	**240/670-BEA-XL-K30-MB1**	**H240/670-HG**
	670	1 090	336	13 300	23 800	1 410	370	231	1 211	353,3	**231/670-BEA-XL-K-MB1**	**H31/670-HG**
	670	1 090	412	16 100	29 500	1 900	430	134	1 485	355	**241/670-BEA-XL-K30-MB1**	**H241/670-HG**
	670	1 220	438	19 000	32 500	1 860	425	162	2 240	402	**232/670-BEA-XL-K-MB1**	**H32/670-HG**
670	710	950	180	4 800	12 100	740	670	350	336	206	**239/710-K-MB**	**H39/710-HG**
	710	1 030	236	9 000	17 300	1 390	580	320	658	234,2	**230/710-BEA-XL-K-MB1**	**H30/710-HG**
	710	1 030	315	11 000	22 500	1 660	485	225	866	254	**240/710-BEA-XL-K30-MB1**	**H240/710-HG**
	710	1 150	345	14 400	25 500	1 550	470	216	1 383	376	**231/710-BEA-XL-K-MB1**	**H31/710-HG**
	710	1 280	450	20 500	35 000	2 020	410	151	2 474	444	**232/710-BEA-XL-K-MB1**	**H32/710-HG**
710	750	1 000	185	5 200	13 000	810	640	325	394	219,6	**239/750-K-MB**	**H39/750-HG**
	750	1 090	250	10 100	19 300	1 540	550	300	797,4	248	**230/750-BEA-XL-K-MB1**	**H30/750-HG**
	750	1 090	355	12 300	25 500	1 860	450	207	1 053	278	**240/750-BEA-XL-K30-MB1**	**H240/750-HG**
	750	1 220	365	16 000	28 500	1 720	440	198	1 640	432	**231/750-BEA-XL-K-MB1**	**H31/750-HG**
	750	1 360	475	22 800	39 500	2 240	380	137	2 969	508	**232/750-BEA-XL-K-MB1**	**H32/750-HG**
750	800	1 060	195	5 900	15 100	1 030	580	295	490	268,9	**239/800-B-K-MB**	**H39/800-HG**
	800	1 150	258	10 900	21 200	1 680	520	275	865,4	311,6	**230/800-BEA-XL-K-MB1**	**H30/800-HG**
	800	1 150	345	13 300	28 000	1 980	420	189	1 168	349	**240/800-BEA-XL-K30-MB1**	**H240/800-HG**
	800	1 280	375	17 100	31 500	1 850	415	181	1 861	515	**231/800-BEA-XL-K-MB1**	**H31/800-HG**
	800	1 420	488	24 400	43 500	2 420	355	125	3 339	611	**232/800-BEA-XL-K-MB1**	**H32/800-HG**

medias *https://www.schaeffler.de/std/1F9A*

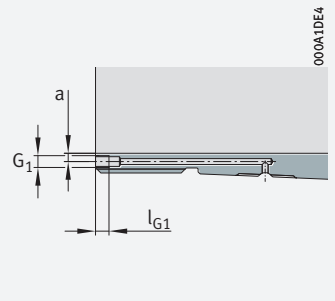

Hydraulic adapter sleeve (..-HG)
Mounting dimensions

Dimensions								Mounting dimensions								Calculation factors			
d_{1H}	r	D_1	d_s	n_s	D_m	B_1	B_3	d_a	D_a	d_b	B_a	r_a	G_1	a	l_{G1}	e	Y_1	Y_2	Y_0
	min.	≈					≈	max.	max.	min.	min.	max.							
600	6	784,5	12,5	23,5	730	254	95	688	827	649	20	5	M8	6	12	0,18	3,8	5,66	3,72
	7,5	838,2	12,5	23,5	730	301	95	696	892	653	20	6	M8	6	12	0,21	3,24	4,82	3,16
	7,5	902,1	12,5	23,5	800	424	118	662	998	663	22	6	M8	6	12	0,29	2,3	3,42	2,25
	7,5	876,2	12,5	23,5	800	525	118	662	998	–	–	6	M8	6	12	0,37	1,82	2,7	1,78
	12	973,4	12,5	23,5	800	521	118	678	1 102	672	22	10	M8	6	12	0,36	1,87	2,79	1,83
630	6	831,5	12,5	23,5	780	264	101	730	877	689	20	5	$G^1/_8$	8	12	0,17	3,95	5,88	3,86
	7,5	888,7	12,5	23,5	780	324	101	698	952	695	22	6	$G^1/_8$	8	12	0,22	3,14	4,67	3,07
	7,5	878,2	12,5	23,5	780	418	101	698	952	–	–	6	$G^1/_8$	8	12	0,28	2,39	3,56	2,34
	7,5	954,85	12,5	23,5	850	456	129	702	1 058	704	22	6	$G^1/_8$	8	12	0,29	2,3	3,42	2,25
	7,5	937	12,5	23,5	850	548	129	702	1 058	–	–	6	$G^1/_8$	8	12	0,36	1,87	2,79	1,83
	12	1 032,6	12,5	23,5	850	558	129	718	1 172	712	22	12	$G^1/_8$	8	12	0,36	1,87	2,79	1,83
670	6	877,5	12,5	23,5	830	286	110	770	927	730	22	5	$G^1/_8$	8	12	0,18	3,85	5,73	3,76
	7,5	939,6	12,5	23,5	830	342	110	738	1 002	736	26	6	$G^1/_8$	8	12	0,21	3,24	4,82	3,16
	7,5	925	12,5	23,5	830	438	110	738	1 002	–	–	6	$G^1/_8$	8	12	0,28	2,43	3,61	2,37
	9,5	1 010,8	12,5	23,5	900	467	132	750	1 110	745	26	8	$G^1/_8$	8	12	0,29	2,35	3,5	2,3
	12	1 089	12,5	23,5	900	572	132	758	1 232	753	26	10	$G^1/_8$	8	12	0,35	1,92	2,86	1,88
710	6	923,2	12,5	23,5	870	291	110	810	977	771	23	5	$G^1/_8$	8	12	0,17	3,95	5,88	3,86
	7,5	992,8	12,5	23,5	870	356	110	778	1 062	778	26	6	$G^1/_8$	8	12	0,21	3,24	4,82	3,16
	7,5	977,5	12,5	23,5	870	460	110	778	1 062	–	–	6	$G^1/_8$	8	12	0,28	2,41	3,59	2,35
	9,5	1 070,8	12,5	23,5	950	493	137	790	1 180	787	26	8	$G^1/_8$	8	12	0,28	2,37	3,53	2,32
	15	1 157,6	12,5	23,5	950	603	137	808	1 302	796	26	12	$G^1/_8$	8	12	0,35	1,94	2,88	1,89
750	6	983,7	12,5	23,5	920	303	110	865	1 037	822	25	5	$G^1/_8$	10	12	0,17	4,05	6,04	3,96
	7,5	1 050,4	12,5	23,5	920	366	110	828	1 122	829	28	6	$G^1/_8$	10	12	0,2	3,31	4,92	3,23
	7,5	1 035,7	12,5	23,5	920	475	110	828	1 122	–	–	6	$G^1/_8$	10	12	0,27	2,49	3,71	2,43
	9,5	1 129,5	12,5	23,5	1 000	505	137	840	1 240	838	28	8	$G^1/_8$	10	12	0,28	2,43	3,61	2,37
	15	1 215,3	12,5	23,5	1 000	618	137	858	1 362	848	28	12	$G^1/_8$	10	12	0,34	1,99	2,96	1,94

Spherical roller bearings

With adapter sleeve

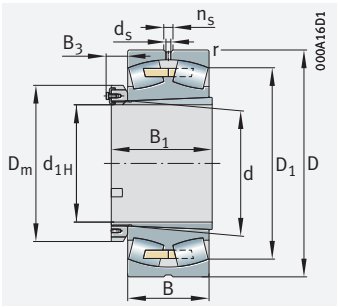

With solid cage, brass or steel; with locknut and retaining bracket

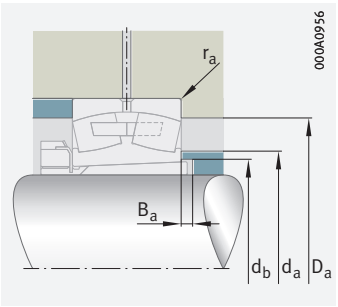

Mounting dimensions

d_{1H} = 800 – 1 060 mm

Main dimensions				Basic load ratings		C_{ur}	n_G	$n_{\vartheta r}$	Mass m		Designation ➤695 | 1.12 ➤696 | 1.13 X-life ➤684	
d_{1H}	d	D	B	dyn. C_r	stat. C_{0r}				Bearing	Adapter sleeve	Bearing	Adapter sleeve
				kN	kN	kN	min^{-1}	min^{-1}	≈ kg	≈ kg		
800	850	1 120	200	6 300	16 400	980	550	275	554	298,5	**239/850-K-MB**	**H39/850-HG**
	850	1 220	272	11 900	24 000	1 840	475	255	1 038	350,8	**230/850-BEA-XL-K-MB1**	**H30/850-HG**
	850	1 220	365	14 800	31 500	2 210	390	173	1 375	393	**240/850-BEA-XL-K30-MB1**	**H240/850-HG**
	850	1 360	400	19 200	36 000	2 060	385	164	2 241	590	**231/850-BEA-XL-K-MB1**	**H31/850-HG**
	850	1 500	515	27 000	48 500	2 650	335	115	3 905	696	**232/850-BEA-XL-K-MB1**	**H32/850-HG**
850	900	1 180	206	6 500	17 200	1 030	520	260	641	335	**239/900-K-MB**	**H39/900-HG**
	900	1 280	280	12 800	25 500	1 990	340	239	1 163	392	**230/900-BEA-XL-K-MB1**	**H30/900-HG**
	900	1 280	375	13 500	34 500	2 430	370	160	1 560	446	**240/900-BEA-XL-K30-MB1**	**H240/900-HG**
	900	1 420	412	20 700	38 500	2 230	365	155	2 456	674	**231/900-BEA-XL-K-MB1**	**H31/900-HG**
	900	1 580	515	28 500	52 000	2 900	320	105	4 336	775	**232/900-BEA-XL-K-MB1**	**H32/900-HG**
900	950	1 360	300	14 400	29 000	2 160	420	220	1 425	432	**230/950-BEA-XL-K-MB1**	**H30/950-HG**
	950	1 360	412	18 400	40 000	2 650	340	147	1 966	499	**240/950-BEA-XL-K30-MB1**	**H240/950-HG**
950	1 000	1 420	412	19 100	42 000	2 850	325	137	2 115	539	**240/1000-BEA-XL-K30-MB1**	**H240/1000-HG**
1 000	1 060	1 500	438	21 400	47 500	3 150	305	126	2 470	665	**240/1060-BEA-XL-K30-MB1**	**H240/1060-HG**
1 060	1 120	1 580	462	21 800	58 000	3 500	285	116	2 884	728	**240/1120-BEA-XL-K30-MB1**	**H240/1120-HG**

medias *https://www.schaeffler.de/std/1F9A*

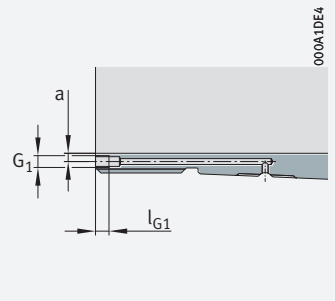

Hydraulic adapter sleeve (..-HG)
Mounting dimensions

Dimensions								Mounting dimensions								Calculation factors			
d_{1H}	r min.	D_1 ≈	d_s	n_s	D_m	B_1	B_3 ≈	d_a max.	D_a max.	d_b min.	B_a min.	r_a max.	G_1	a	l_{G1}	e	Y_1	Y_2	Y_0
800	6	1 039,9	12,5	23,5	980	308	113	917	1 097	873	25	5	$G^1/_8$	10	12	0,16	4,11	6,12	4,02
	7,5	1 115,1	12,5	23,5	980	380	113	878	1 192	880	28	6	$G^1/_8$	10	12	0,2	3,34	4,98	3,27
	7,5	1 099,4	12,5	23,5	980	495	113	878	1 192	–	–	6	$G^1/_8$	10	12	0,27	2,51	3,74	2,45
	12	1 199,1	12,5	23,5	1 060	536	144	898	1 312	890	28	10	$G^1/_8$	10	12	0,28	2,43	3,61	2,37
	15	1 285,3	12,5	23,5	1 060	651	144	908	1 442	900	28	12	$G^1/_8$	10	12	0,34	1,99	2,96	1,94
850	6	1 098,8	12,5	23,5	1 030	326	122	972	1 157	923	27	5	$G^1/_8$	10	12	0,16	4,28	6,37	4,19
	7,5	1 174,3	12,5	23,5	1 030	400	122	928	1 252	931	30	6	$G^1/_8$	10	12	0,2	3,42	5,09	3,34
	7,5	1 157,4	12,5	23,5	1 030	520	122	928	1 252	–	–	6	$G^1/_8$	10	12	0,26	2,57	3,83	2,52
	12	1 256,2	12,5	23,5	1 120	557	150	948	1 372	942	30	10	$G^1/_8$	10	12	0,27	2,47	3,67	2,41
	15	1 365,5	12,5	23,5	1 120	660	150	958	1 522	950	30	12	$G^1/_8$	10	12	0,32	2,12	3,15	2,07
900	7,5	1 245,7	12,5	23,5	1 080	420	122	978	1 332	983	30	6	$G^1/_8$	10	12	0,2	3,38	5,03	3,31
	7,5	1 220,4	12,5	23,5	1 080	557	122	978	1 332	–	–	6	$G^1/_8$	10	12	0,27	2,47	3,67	2,41
950	7,5	1 282,2	12,5	23,5	1 140	562	122	1 028	1 392	–	–	6	$G^1/_8$	10	12	0,26	2,6	3,87	2,54
1 000	9,5	1 354	12,5	23,5	1 200	588	122	1 094	1 466	–	–	8	$G^1/_4$	12	15	0,26	2,57	3,83	2,52
1 060	9,5	1 429,7	12,5	23,5	1 260	612	122	1 154	1 546	–	–	8	$G^1/_4$	12	15	0,26	2,57	3,83	2,52

Spherical roller bearings

With withdrawal sleeve

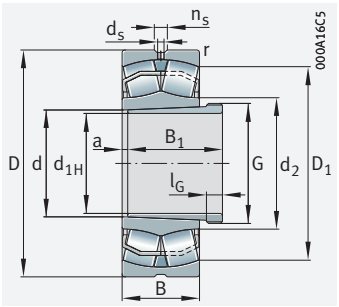

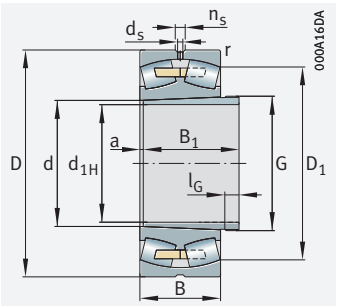

With solid cage, brass or steel

d_{1H} = 35 – 75 mm

Main dimensions				Basic load ratings		Fatigue limit load	Limiting speed	Speed rating	Mass m		Designation ➤695|1.12 ➤696|1.13 X-life ➤684	
d_{1H}	d	D	B	dyn. C_r	stat. C_{0r}	C_{ur}	n_G	$n_{\vartheta r}$	Bearing	Withdrawal sleeve	Bearing	Withdrawal sleeve
				kN	kN	N	min^{-1}	min^{-1}	≈ kg	≈ kg		
35	40	80	23	101	91	12 100	10 500	6 200	0,528	0,09	**22208-E1-XL-K**	**AH308**
	40	90	23	109	107	14 600	9 800	5 200	0,749	0,09	**21308-E1-XL-K**	**AH308**
	40	90	33	156	149	13 500	7 600	5 500	1	0,13	**22308-E1-XL-K**	**AH2308**
40	45	85	23	104	99	13 000	10 100	5 600	0,577	0,11	**22209-E1-XL-K**	**AH309**
	45	100	25	129	130	17 700	9 000	4 750	0,999	0,11	**21309-E1-XL-K**	**AH309**
	45	100	36	187	183	16 500	6 800	5 000	1,4	0,17	**22309-E1-XL-K**	**AH2309**
45	50	90	23	109	107	14 600	9 800	5 100	0,608	0,14	**22210-E1-XL-K**	**AHX310**
	50	110	27	129	130	17 700	9 000	5 400	1,32	0,14	**21310-E1-XL-K**	**AHX310**
	50	110	40	229	223	20 700	6 300	4 800	1,9	0,22	**22310-E1-XL-K**	**AHX2310**
50	55	100	25	129	130	17 700	9 000	4 650	0,825	0,17	**22211-E1-XL-K**	**AHX311**
	55	120	29	160	155	20 700	8 100	5 100	1,28	0,17	**21311-E1-XL-K**	**AHX311**
	55	120	43	265	260	24 600	5 800	4 500	2,2	0,26	**22311-E1-XL-K**	**AHX2311**
55	60	110	28	160	155	20 700	8 100	4 550	1,09	0,2	**22212-E1-XL-K**	**AHX312**
	60	130	31	211	226	28 500	6 700	4 100	1,89	0,2	**21312-E1-XL-K**	**AHX312**
	60	130	46	310	310	29 000	5 400	4 200	2,8	0,32	**22312-E1-XL-K**	**AHX2312**
60	65	120	31	202	210	26 500	7 000	4 200	1,52	0,23	**22213-E1-XL-K**	**AH313G**
	65	140	33	250	270	34 500	6 200	3 600	2,13	0,23	**21313-E1-XL-K**	**AH313G**
	65	140	48	350	365	33 500	5 000	3 800	3,5	0,36	**22313-E1-XL-K**	**AH2313G**
65	70	125	31	211	226	28 500	6 700	3 950	1,61	0,26	**22214-E1-XL-K**	**AH314G**
	70	150	35	250	270	34 500	6 200	3 950	3,13	0,26	**21314-E1-XL-K**	**AH314G**
	70	150	51	390	390	37 500	4 800	3 700	4,1	0,42	**22314-E1-XL-K**	**AHX2314G**
70	75	130	31	216	237	30 500	6 500	3 700	1,68	0,29	**22215-E1-XL-K**	**AH315G**
	75	160	37	305	325	39 000	5 700	3 750	3,74	0,29	**21315-E1-XL-K**	**AH315G**
	75	160	55	445	450	42 000	4 500	3 550	5,3	0,48	**22315-E1-XL-K**	**AHX2315G**
75	80	140	33	250	270	34 500	6 200	3 550	2,08	0,38	**22216-E1-XL-K**	**AH316**
	80	170	39	305	325	39 000	5 700	4 050	4,54	0,38	**21316-E1-XL-K**	**AH316**
	80	170	58	495	510	46 500	4 250	3 400	6,1	0,61	**22316-E1-XL-K**	**AHX2316**

medias *https://www.schaeffler.de/std/1F9A*

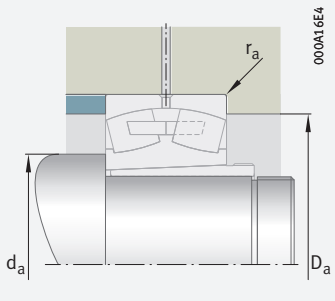

Mounting dimensions

Dimensions										Mounting dimensions			Calculation factors			
d_{1H}	r min.	D_1 ≈	d_2 ≈	d_s	n_s	a ≈	l_G	Thread G	B_1	d_a min.	D_a max.	r_a max.	e	Y_1	Y_2	Y_0
35	1,1	70,4	48,8	3,2	4,8	3	6	M45×1,5	29	47	73	1	0,27	2,49	3,71	2,43
	1,5	80,8	59,9	3,2	4,8	3	6	M45×1,5	29	49	81	1,5	0,23	2,95	4,4	2,89
	1,5	76	52,4	3,2	6,5	3	7	M45×1,5	40	49	81	1,5	0,36	1,86	2,77	1,82
40	1,1	75,6	55	3,2	4,8	3	6	M50×1,5	31	52	78	1	0,25	2,74	4,08	2,68
	1,5	89,8	67,6	3,2	4,8	3	6	M50×1,5	31	54	91	1,5	0,21	3,17	4,72	3,1
	1,5	84,7	58,9	3,2	6,5	3	7	M50×1,5	44	54	91	1,5	0,36	1,9	2,83	1,86
45	1,1	80,8	59,9	3,2	4,8	3	7	M55×2	35	57	83	1	0,23	2,95	4,4	2,89
	2	89,8	67,7	3,2	4,8	3	7	M55×2	35	61	99	2	0,21	3,17	4,72	3,1
	2	92,6	63	3,2	6,5	3	9	M55×2	50	61	99	2	0,36	1,86	2,77	1,82
50	1,5	89,8	67,6	3,2	4,8	3	7	M60×2	37	64	91	1,5	0,21	3,17	4,72	3,1
	2	98,3	71,6	3,2	6,5	3	7	M60×2	37	66	109	2	0,23	2,98	4,44	2,92
	2	101,4	68,9	3,2	6,5	3	10	M60×2	54	66	109	2	0,36	1,89	2,81	1,84
55	1,5	98,7	71,6	3,2	6,5	3	8	M65×2	40	69	101	1,5	0,23	2,98	4,44	2,92
	2,1	112,5	84,4	3,2	6,5	3	8	M65×2	40	72	118	2,1	0,23	2,95	4,4	2,89
	2,1	110,1	74,8	3,2	6,5	3	11	M65×2	58	72	118	2,1	0,35	1,91	2,85	1,87
60	1,5	107,3	79,1	3,2	6,5	3	8	M70×2	42	74	111	1,5	0,24	2,81	4,19	2,75
	2,1	126,8	94,9	3,2	6,5	3	8	M70×2	42	77	128	2,1	0,22	3,14	4,67	3,07
	2,1	119,3	83,2	4,8	9,5	3	12	M70×2	61	77	128	2,1	0,34	2	2,98	1,96
65	1,5	112,5	84,4	3,2	6,5	4	8	M75×2	43	79	116	1,5	0,23	2,95	4,4	2,89
	2,1	126,2	94,9	3,2	6,5	4	8	M75×2	43	82	138	2,1	0,22	3,14	4,67	3,07
	2,1	128	86,7	4,8	9,5	4	12	M75×2	64	82	138	2,1	0,34	2	2,98	1,96
70	1,5	117,7	89,8	3,2	6,5	4	8	M80×2	45	84	121	1,5	0,22	3,1	4,62	3,03
	2,1	135,2	99,7	3,2	6,5	4	8	M80×2	45	87	148	2,1	0,22	3,04	4,53	2,97
	2,1	136,3	92,4	4,8	9,5	4	12	M80×2	68	87	148	2,1	0,34	1,99	2,96	1,94
75	2	126,8	94,9	3,2	6,5	4	8	M90×2	48	91	129	2	0,22	3,14	4,67	3,07
	2,1	135,4	99,8	3,2	6,5	4	8	M90×2	48	92	158	2,1	0,22	3,04	4,53	2,97
	2,1	145,1	98,3	4,8	9,5	4	12	M90×2	71	92	158	2,1	0,34	1,99	2,96	1,94

Spherical roller bearings

With withdrawal sleeve

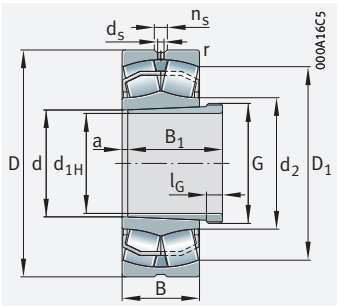

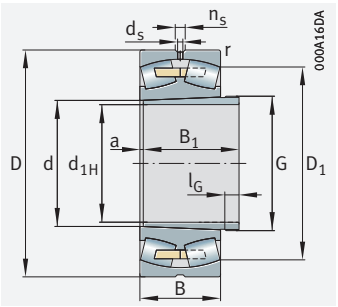

With solid cage, brass or steel

d_{1H} = 80 – 105 mm

Main dimensions				Basic load ratings		Fatigue limit load	Limiting speed	Speed rating	Mass m		Designation ➤695|1.12 ➤696|1.13 X-life ➤684	
d_{1H}	d	D	B	dyn. C_r	stat. C_{0r}	C_{ur}	n_G	$n_{\vartheta r}$	Bearing	Withdrawal sleeve	Bearing	Withdrawal sleeve
				kN	kN	N	min^{-1}	min^{-1}	≈ kg	≈ kg		
80	85	150	36	305	325	39 000	5 700	3 450	2,59	0,44	**22217-E1-XL-K**	**AHX317**
	85	180	41	345	375	43 500	5 200	3 800	5,3	0,44	**21317-E1-XL-K**	**AHX317**
	85	180	60	540	560	51 000	4 100	3 200	7,1	0,68	**22317-E1-XL-K**	**AHX2317**
85	90	160	40	345	375	43 500	5 200	3 400	3,35	0,48	**22218-E1-XL-K**	**AHX318**
	90	160	52,4	445	520	50 000	4 250	2 650	4,1	0,58	**23218-E1-XL-K-TVPB**	**AHX3218**
	90	160	52,4	445	520	50 000	4 250	2 650	4,3	0,58	**23218-E1A-XL-K-M**	**AHX3218**
	90	190	43	380	415	48 500	4 850	3 600	6,26	0,48	**21318-E1-XL-K**	**AHX318**
	90	190	64	610	630	56 000	3 850	3 000	8,5	0,78	**22318-E1-XL-K**	**AHX2318**
90	95	170	43	380	415	48 000	4 850	3 300	4,04	0,55	**22219-E1-XL-K**	**AHX319**
	95	200	45	425	450	48 500	4 600	3 250	6,63	0,55	**21319-E1-XL-K-TVPB**	**AHX319**
	95	200	67	670	700	61 000	3 700	2 800	9,5	0,91	**22319-E1-XL-K**	**AHX2319**
95	100	165	52	450	570	54 000	4 000	2 750	4,1	0,67	**23120-E1-XL-K-TVPB**	**AHX3120**
	100	165	52	450	570	54 000	4 000	2 750	4,2	0,67	**23120-E1A-XL-K-M**	**AHX3120**
	100	180	46	430	475	53 000	4 550	3 150	4,91	0,6	**22220-E1-XL-K**	**AHX320**
	100	180	60,3	560	660	61 000	3 750	2 410	6,1	0,78	**23220-E1-XL-K-TVPB**	**AHX3220**
	100	180	60,3	560	660	61 000	3 750	2 410	6,3	0,78	**23220-E1A-XL-K-M**	**AHX3220**
	100	215	47	495	530	62 000	4 400	3 050	8,08	0,6	**21320-E1-XL-K-TVPB**	**AHX320**
	100	215	73	810	920	77 000	3 300	2 380	13	1,03	**22320-E1-XL-K**	**AHX2320**
105	110	170	45	400	530	54 000	4 200	3 000	3,4	0,73	**23022-E1-XL-K-TVPB**	**AHX322**
	110	170	45	400	530	54 000	4 200	3 000	3,8	0,73	**23022-E1A-XL-K-M**	**AHX322**
	110	180	56	530	680	62 000	3 700	2 550	4,9	0,79	**23122-E1-XL-K-TVPB**	**AHX3122**
	110	180	56	530	680	62 000	3 700	2 550	5,1	0,79	**23122-E1A-XL-K-M**	**AHX3122**
	110	180	69	530	750	86 000	3 350	1 960	6,7	0,73	**24122-BE-XL-K30**	**AH24122**
	110	200	53	550	600	64 000	4 100	3 000	6,99	0,79	**22222-E1-XL-K**	**AHX3122**
	110	200	69,8	710	870	73 000	3 250	2 100	8,8	0,98	**23222-E1-XL-K-TVPB**	**AHX3222A**
	110	200	69,8	710	870	73 000	3 250	2 100	9,3	0,98	**23222-E1A-XL-K-M**	**AHX3222A**
	110	240	50	600	640	70 000	4 000	2 700	10,91	0,73	**21322-E1-XL-K-TVPB**	**AHX322**
	110	240	80	950	1 070	93 000	3 000	2 130	17,4	1,26	**22322-E1-XL-K**	**AHX2322G**

medias *https://www.schaeffler.de/std/1F9A*

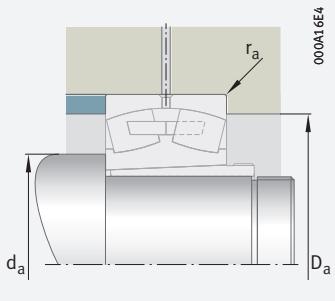

Mounting dimensions

Dimensions										Mounting dimensions			Calculation factors			
d_{1H}	r min.	D_1 ≈	d_2 ≈	d_s	n_s	a ≈	l_G	Thread G	B_1	d_a min.	D_a max.	r_a max.	e	Y_1	Y_2	Y_0
80	2	135,4	99,7	3,2	6,5	4	9	M95×2	52	96	139	2	0,22	3,04	4,53	2,97
	3	143,9	106,1	4,8	9,5	4	9	M95×2	52	99	166	2,5	0,23	2,9	4,31	2,83
	3	154,2	104,4	4,8	9,5	4	13	M95×2	74	99	166	2,5	0,33	2,04	3,04	2
85	2	143,9	106,1	3,2	6,5	4	9	M100×2	53	101	149	2	0,23	2,9	4,31	2,83
	2	140	104,1	3,2	6,5	4	10	M100×2	63	101	149	2	0,31	2,2	3,27	2,15
	2	140	–	3,2	6,5	4	10	M100×2	63	101	149	2	0,31	2,2	3,27	2,15
	3	152,7	112,6	4,8	9,5	4	9	M100×2	53	104	176	2,5	0,24	2,87	4,27	2,8
	3	162,5	110,2	6,3	12,2	4	14	M100×2	79	104	176	2,5	0,33	2,03	3,02	1,98
90	2,1	152,7	112,6	4,8	9,5	4	10	M105×2	57	107	158	2,1	0,24	2,87	4,27	2,8
	3	169,4	124,3	4,8	9,5	4	10	M105×2	57	109	186	2,5	0,22	3,04	4,53	2,97
	3	171,2	116	6,3	12,2	4	16	M105×2	85	109	186	2,5	0,33	2,03	3,02	1,98
95	2	146,3	113,9	3,2	6,5	4	11	M110×2	64	111	154	2	0,28	2,37	3,53	2,32
	2	146,3	–	3,2	6,5	4	11	M110×2	64	111	154	2	0,28	2,37	3,53	2,32
	2,1	161,4	119	4,8	9,5	4	10	M110×2	59	112	168	2,1	0,24	2,84	4,23	2,78
	2,1	156,7	116,7	4,8	9,5	4	11	M110×2	73	112	168	2,1	0,31	2,15	3,2	2,1
	2,1	156,7	–	4,8	9,5	4	11	M110×2	73	112	168	2,1	0,31	2,15	3,2	2,1
	3	182	132	4,8	9,5	4	10	M110×2	59	114	201	2,5	0,22	3,14	4,67	3,07
	3	184,7	130,2	6,3	12,2	4	16	M110×2	90	114	201	2,5	0,33	2,03	3,02	1,98
105	2	154,6	123,7	3,2	6,5	4	12	M120×2	63	118,8	161,2	2	0,23	2,9	4,31	2,83
	2	154,6	–	3,2	6,5	4	12	M120×2	63	118,8	161,2	2	0,23	2,9	4,31	2,83
	2	160	124,6	4,8	9,5	4	11	M120×2	68	121	169	2	0,28	2,39	3,56	2,34
	2	160	–	4,8	9,5	4	11	M120×2	68	121	169	2	0,28	2,41	3,59	2,35
	2	154,9	125,6	3,2	6,5	9	13	M115×2	82	121	169	2	0,34	1,96	2,92	1,92
	2,1	178,7	129,4	4,8	9,5	4	11	M120×2	68	122	188	2,1	0,25	2,71	4,04	2,65
	2,1	172,7	129,1	4,8	9,5	4	11	M120×2	82	122	188	2,1	0,33	2,06	3,06	2,01
	2,1	172,7	–	4,8	9,5	4	11	M120×2	82	122	188	2,1	0,33	2,06	3,06	2,01
	3	202,5	146,4	6,3	12,2	4	12	M120×2	63	124	226	2,5	0,21	3,24	4,82	3,16
	3	204,9	143,1	8	15	4	16	M120×2	98	124	226	2,5	0,33	2,07	3,09	2,03

Spherical roller bearings

With withdrawal sleeve

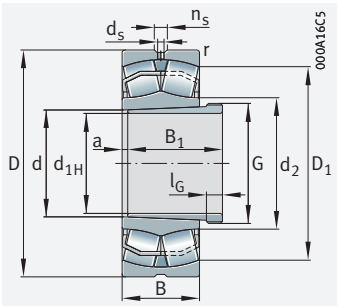

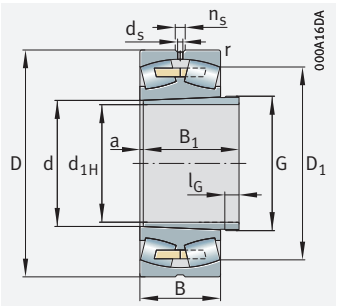

With solid cage, brass or steel

d_{1H} = 115 – 135 mm

Main dimensions				Basic load ratings		Fatigue limit load	Limiting speed	Speed rating	Mass m		Designation ➤695|1.12 ➤696|1.13 X-life ➤684	
d_{1H}	d	D	B	dyn. C_r	stat. C_{0r}	C_{ur}	n_G	$n_{\vartheta r}$	Bearing	Withdrawal sleeve	Bearing	Withdrawal sleeve
				kN	kN	N	min^{-1}	min^{-1}	≈ kg	≈ kg		
115	120	180	46	430	580	60 000	3 950	2 800	3,7	0,77	**23024-E1-XL-K-TVPB**	**AHX3024**
	120	180	46	430	580	60 000	3 950	2 800	4,1	0,77	**23024-E1A-XL-K-M**	**AHX3024**
	120	180	60	450	690	86 000	3 450	2 360	5,4	0,71	**24024-BE-XL-K30**	**AH24024**
	120	200	62	630	800	74 000	3 400	2 290	7,1	0,97	**23124-E1-XL-K-TVPB**	**AHX3124**
	120	200	62	630	800	74 000	3 400	2 290	7,6	0,97	**23124-E1A-XL-K-M**	**AHX3124**
	120	200	80	680	950	103 000	2 950	1 740	10,2	1,02	**24124-BE-XL-K30**	**AH24124**
	120	215	58	640	740	70 000	3 650	2 700	8,84	0,97	**22224-E1-XL-K**	**AHX3124**
	120	215	76	820	1 020	82 000	3 000	1 910	11,1	1,22	**23224-E1-XL-K-TVPB**	**AHX3224A**
	120	215	76	820	1 020	82 000	3 000	1 910	11,4	1,22	**23224-E1A-XL-K-M**	**AHX3224A**
	120	260	86	1 080	1 170	105 000	2 850	2 000	22,1	1,5	**22324-E1-XL-K**	**AHX2324G**
125	130	200	52	540	730	71 000	3 600	2 600	5,4	0,94	**23026-E1-XL-K-TVPB**	**AHX3026**
	130	200	52	540	730	71 000	3 600	2 600	5,7	0,94	**23026-E1A-XL-K-M**	**AHX3026**
	130	200	69	570	860	103 000	3 100	2 130	8,1	0,89	**24026-BE-XL-K30**	**AH24026**
	130	210	64	680	890	81 000	3 200	2 110	7,8	1,1	**23126-E1-XL-K-TVPB**	**AHX3126**
	130	210	64	680	890	81 000	3 200	2 110	8,1	1,1	**23126-E1A-XL-K-M**	**AHX3126**
	130	210	80	710	1 050	112 000	2 800	1 560	10,8	1,13	**24126-BE-XL-K30**	**AH24126**
	130	230	64	760	890	81 000	3 350	2 500	10,9	1,1	**22226-E1-XL-K**	**AHX3126**
	130	230	80	910	1 150	91 000	2 850	1 740	12,6	1,48	**23226-E1-XL-K-TVPB**	**AHX3226G**
	130	230	80	910	1 150	91 000	2 850	1 740	13,6	1,48	**23226-E1A-XL-K-M**	**AHX3226G**
	130	280	93	1 250	1 370	120 000	2 650	1 820	27,4	1,84	**22326-E1-XL-K**	**AHX2326G**
135	140	210	53	570	800	77 000	3 450	2 390	5,8	1,03	**23028-E1-XL-K-TVPB**	**AHX3028**
	140	210	53	570	800	77 000	3 450	2 390	6	1,03	**23028-E1A-XL-K-M**	**AHX3028**
	140	210	69	590	930	111 000	2 950	1 950	8,1	0,96	**24028-BE-XL-K30**	**AH24028**
	140	225	68	760	1 010	90 000	3 000	1 930	9,5	1,29	**23128-E1-XL-K-TVPB**	**AHX3128**
	140	225	68	760	1 010	90 000	3 000	1 930	10,2	1,29	**23128-E1A-XL-K-M**	**AHX3128**
	140	225	85	800	1 190	127 000	2 650	1 430	13,5	1,29	**24128-BE-XL-K30**	**AH24128**
	140	250	68	870	1 040	100 000	3 150	2 250	13,7	1,29	**22228-E1-XL-K**	**AHX3128**
	140	250	88	1 090	1 400	116 000	2 600	1 550	17,1	1,72	**23228-E1-XL-K-TVPB**	**AHX3228G**
	140	250	88	1 090	1 400	116 000	2 600	1 550	17,6	1,72	**23228-E1A-XL-K-M**	**AHX3228G**
	140	300	102	1 460	1 630	135 000	2 420	1 660	34,4	2,21	**22328-E1-XL-K**	**AHX2328G**

medias *https://www.schaeffler.de/std/1F9A*

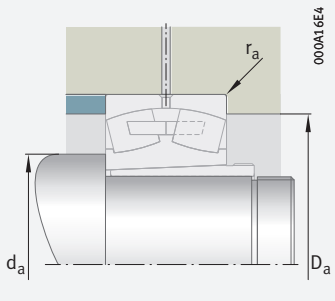

Mounting dimensions

Dimensions										Mounting dimensions			Calculation factors			
d_{1H}	r min.	D_1 ≈	d_2 ≈	d_s	n_s	a ≈	l_G	Thread G	B_1	d_a min.	D_a max.	r_a max.	e	Y_1	Y_2	Y_0
115	2	164,7	133	3,2	6,5	4	13	M130×2	60	128,8	171,2	2	0,22	3,04	4,53	2,97
	2	164,7	–	3,2	6,5	4	13	M130×2	60	128,8	171,2	2	0,22	3,04	4,53	2,97
	2	159,8	134,5	3,2	6,5	9	13	M125×2	73	128,8	171,2	2	0,29	2,33	3,47	2,28
	2	177,4	136,2	4,8	9,5	4	12	M130×2	75	131	189	2	0,28	2,39	3,56	2,34
	2	177,4	–	4,8	9,5	4	12	M130×2	75	131	189	2	0,28	2,39	3,56	2,34
	2	170,3	136,6	3,2	6,5	9	13	M130×2	93	131	189	2	0,37	1,84	2,74	1,8
	2,1	192	141,9	6,3	12,2	4	12	M130×2	75	132	203	2,1	0,25	2,71	4,04	2,65
	2,1	185,5	139	4,8	9,5	4	13	M130×2	90	132	203	2,1	0,33	2,03	3,02	1,98
	2,1	185,5	–	4,8	9,5	4	13	M130×2	90	132	203	2,1	0,33	2,03	3,02	1,98
	3	222,4	150,7	8	15	4	17	M130×2	105	134	246	2,5	0,33	2,06	3,06	2,01
125	2	182,3	145,9	4,8	9,5	4	14	M140×2	67	138,8	191,2	2	0,23	2,95	4,4	2,89
	2	182,3	–	4,8	9,5	4	14	M140×2	67	138,8	191,2	2	0,23	2,95	4,4	2,89
	2	176,1	146,2	3,2	6,5	10	14	M135×2	83	138,8	191,2	2	0,31	2,21	3,29	2,16
	2	187,3	146	4,8	9,5	4	12	M140×2	78	141	199	2	0,28	2,45	3,64	2,39
	2	187,3	–	4,8	9,5	4	12	M140×2	78	141	199	2	0,28	2,45	3,64	2,39
	2	181,2	148,3	3,2	6,5	10	14	M140×2	94	141	199	2	0,34	1,98	2,94	1,93
	3	205	151,7	6,3	12,2	4	12	M140×2	78	144	216	2,5	0,26	2,62	3,9	2,56
	3	199,3	150	4,8	9,5	4	15	M140×2	98	144	216	2,5	0,33	2,07	3,09	2,03
	3	–	–	4,8	9,5	4	15	M140×2	98	144	216	2,5	0,33	2,07	3,09	2,03
	4	239,5	162,2	9,5	17,7	4	19	M140×2	115	147	263	3	0,33	2,06	3,06	2,01
135	2	192,3	155,4	4,8	9,5	5	14	M150×2	68	148,8	201,2	2	0,22	3,07	4,57	3
	2	192,3	–	4,8	9,5	5	14	M150×2	68	148,8	201,2	2	0,22	3,07	4,57	3
	2	186,4	157,1	3,2	6,5	10	14	M145×2	83	148,8	201,2	2	0,28	2,37	3,53	2,32
	2,1	201	157,1	4,8	9,5	5	14	M150×2	83	152	213	2,1	0,27	2,49	3,71	2,43
	2,1	201	–	4,8	9,5	5	14	M150×2	83	152	213	2,1	0,27	2,49	3,71	2,43
	2,1	194,4	158,9	4,8	9,5	10	14	M150×2	99	152	213	2,1	0,34	1,99	2,96	1,94
	3	223,1	164,9	6,3	12,2	5	14	M150×2	83	154	236	2,5	0,25	2,67	3,97	2,61
	3	216	162	6,3	12,2	5	15	M150×2	104	154	236	2,5	0,33	2,04	3,04	2
	3	216	–	6,3	12,2	5	15	M150×2	104	154	236	2,5	0,33	2,04	3,04	2
	4	255,7	173,5	9,5	17,7	5	20	M150×2	125	157	283	3	0,34	2	2,98	1,96

Spherical roller bearings

With withdrawal sleeve

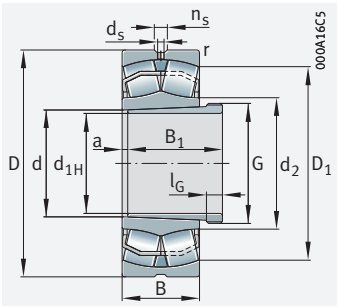

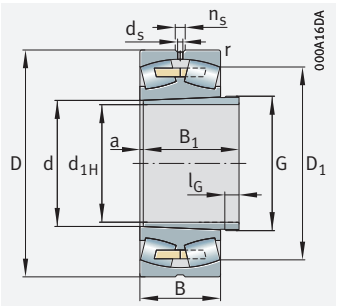

With solid cage, brass or steel

d_{1H} = 145 – 160 mm

Main dimensions				Basic load ratings		Fatigue limit load	Limiting speed	Speed rating	Mass m		Designation ➤695|1.12 ➤696|1.13 X-life ➤684	
d_{1H}	d	D	B	dyn. C_r	stat. C_{0r}	C_{ur}	n_G	$n_{\vartheta r}$	Bearing	Withdrawal sleeve	Bearing	Withdrawal sleeve
				kN	kN	N	min^{-1}	min^{-1}	≈ kg	≈ kg		
145	150	225	56	630	880	87 000	3 250	2 210	7,3	1,18	**23030-E1-XL-K-TVPB**	**AHX3030**
	150	225	56	630	880	87 000	3 250	2 210	7,3	1,18	**23030-E1A-XL-K-M**	**AHX3030**
	150	225	75	680	1 090	125 000	2 750	1 790	10,7	1,12	**24030-BE-XL-K30**	**AH24030**
	150	250	80	1 000	1 330	145 000	2 650	1 720	14,5	1,66	**23130-E1-XL-K-TVPB**	**AHX3130G**
	150	250	80	1 000	1 330	145 000	2 650	1 720	15,8	1,66	**23130-E1A-XL-K-M**	**AHX3130G**
	150	250	100	1 050	1 520	153 000	2 370	1 270	20,2	1,63	**24130-BE-XL-K30**	**AH24130**
	150	270	73	1 010	1 210	114 000	2 900	2 050	17,8	1,66	**22230-E1-XL-K**	**AHX3130G**
	150	270	96	1 280	1 660	133 000	2 400	1 400	22,3	2,09	**23230-E1-XL-K-TVPB**	**AHX3230G**
	150	270	96	1 280	1 660	133 000	2 400	1 400	22,9	2,09	**23230-E1A-XL-K-M**	**AHX3230G**
	150	320	108	1 640	1 850	151 000	2 290	1 520	40,9	2,64	**22330-E1-XL-K**	**AHX2330G**
150	160	240	60	720	1 010	98 000	3 050	2 060	8,7	2,09	**23032-E1-XL-K-TVPB**	**AH3032**
	160	240	60	720	1 010	98 000	3 050	2 060	9,4	2,09	**23032-E1A-XL-K-M**	**AH3032**
	160	240	80	770	1 240	140 000	2 550	1 660	12,2	2,31	**24032-BE-XL-K30**	**AH24032**
	160	270	86	1 160	1 550	166 000	2 490	1 560	18,5	2,9	**23132-E1-XL-K-TVPB**	**AH3132A**
	160	270	86	1 160	1 550	166 000	2 490	1 560	18,6	2,9	**23132-E1A-XL-K-M**	**AH3132A**
	160	270	109	1 220	1 800	173 000	2 180	1 140	24,9	3,04	**24132-BE-XL-K30**	**AH24132**
	160	290	80	1 150	1 400	129 000	2 650	1 900	22,4	2,9	**22232-E1-XL-K**	**AH3132A**
	160	290	104	1 460	1 910	150 000	2 210	1 280	27,7	3,65	**23232-E1-XL-K-TVPB**	**AH3232G**
	160	290	104	1 460	1 910	150 000	2 210	1 280	28,5	3,65	**23232-E1A-XL-K-M**	**AH3232G**
	160	340	114	1 680	1 990	162 000	2 250	1 420	47,3	4,26	**22332-BE-XL-K**	**AH2332G**
160	170	260	67	880	1 230	151 000	2 800	1 890	11,9	2,48	**23034-E1-XL-K-TVPB**	**AH3034**
	170	260	67	880	1 230	151 000	2 800	1 890	12,5	2,48	**23034-E1A-XL-K-M**	**AH3034**
	170	260	90	940	1 480	162 000	2 380	1 540	16,5	2,76	**24034-BE-XL-K30**	**AH24034**
	170	280	88	1 220	1 690	177 000	2 380	1 460	19,9	3,12	**23134-E1-XL-K-TVPB**	**AH3134A**
	170	280	88	1 220	1 690	177 000	2 380	1 460	19,5	3,12	**23134-E1A-XL-K-M**	**AH3134A**
	170	280	109	1 260	1 900	184 000	2 110	1 060	25,9	3,27	**24134-BE-XL-K30**	**AH24134**
	170	310	86	1 320	1 570	144 000	2 550	1 780	27,1	3,12	**22234-E1-XL-K**	**AH3134A**
	170	310	110	1 640	2 170	168 000	2 090	1 160	33,1	4,29	**23234-E1-XL-K-TVPB**	**AH3234G**
	170	310	110	1 640	2 170	168 000	2 090	1 160	34,6	4,29	**23234-E1A-XL-K-M**	**AH3234G**
	170	360	120	1 870	2 220	178 000	2 130	1 320	56,9	4,78	**22334-BE-XL-K**	**AH2334G**

medias *https://www.schaeffler.de/std/1F9A*

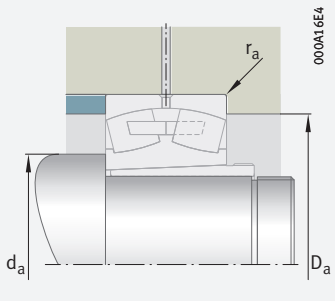

Mounting dimensions

Dimensions										Mounting dimensions			Calculation factors			
d_{1H}	r min.	D_1 ≈	d_2 ≈	d_s	n_s	a ≈	l_G	Thread G	B_1	d_a min.	D_a max.	r_a max.	e	Y_1	Y_2	Y_0
145	2,1	206,3	166,6	4,8	9,5	5	15	M160×3	72	160,2	214,8	2,1	0,22	3,1	4,62	3,03
	2,1	206,3	–	4,8	9,5	5	15	M160×3	72	160,2	214,8	2,1	0,22	3,1	4,62	3,03
	2,1	199,4	168,1	3,2	6,5	11	15	M155×3	90	160,2	214,8	2,1	0,29	2,32	3,45	2,26
	2,1	220,8	170,1	6,3	12,2	5	15	M160×3	96	162	238	2,1	0,29	2,32	3,45	2,26
	2,1	220,8	–	6,3	12,2	5	15	M160×3	96	162	238	2,1	0,29	2,32	3,45	2,26
	2,1	213	170,3	4,8	9,5	11	15	M160×3	115	162	238	2,1	0,37	1,83	2,72	1,79
	3	240,8	177,9	8	15	5	15	M160×3	96	164	256	2,5	0,25	2,69	4	2,63
	3	232,6	174	6,3	12,2	5	17	M160×3	114	164	256	2,5	0,33	2,02	3	1,97
	3	232,6	–	6,3	12,2	5	17	M160×3	114	164	256	2,5	0,33	2,02	3	1,97
	4	273,2	185,3	9,5	17,7	5	24	M160×3	135	167	303	3	0,33	2,02	3	1,97
150	2,1	219,9	177	6,3	12,2	5	16	M170×3	77	170,2	229,8	2,1	0,22	3,1	4,62	3,03
	2,1	219,9	–	6,3	12,2	5	16	M170×3	77	170,2	229,8	2,1	0,22	3,1	4,62	3,03
	2,1	212,5	179,3	4,8	9,5	11	15	M170×3	95	170,2	229,8	2,1	0,29	2,32	3,45	2,26
	2,1	238,3	183,2	8	15	5	16	M170×3	103	172	258	2,1	0,29	2,32	3,45	2,26
	2,1	238,3	–	8	15	5	16	M170×3	103	172	258	2,1	0,29	2,32	3,45	2,26
	2,1	228,9	183,4	4,8	9,5	11	15	M170×3	124	172	258	2,1	0,37	1,8	2,69	1,76
	3	258,2	190,9	8	15	5	16	M170×3	103	174	276	2,5	0,26	2,64	3,93	2,58
	3	249,3	186,7	8	15	6	20	M170×3	124	174	276	2,5	0,34	2	2,98	1,96
	3	249,3	–	8	15	6	20	M170×3	124	174	276	2,5	0,34	2	2,98	1,96
	4	286,7	201,2	9,5	17,7	6	24	M170×3	140	177	323	3	0,35	1,94	2,88	1,89
160	2,1	237,2	189,8	6,3	12,2	5	17	M180×3	85	180,2	249,8	2,1	0,23	2,98	4,44	2,92
	2,1	–	–	6,3	12,2	5	17	M180×3	85	180,2	249,8	2,1	0,23	2,98	4,44	2,92
	2,1	228,4	190	4,8	9,5	11	16	M180×3	106	180,2	249,8	2,1	0,31	2,2	3,27	2,15
	2,1	248,1	193,4	8	15	5	16	M180×3	104	182	268	2,1	0,28	2,37	3,53	2,32
	2,1	–	–	8	15	5	16	M180×3	104	182	268	2,1	0,28	2,37	3,53	2,32
	2,1	240	194,1	4,8	9,5	11	16	M180×3	125	182	268	2,1	0,36	1,9	2,83	1,86
	4	275,4	199,8	9,5	17,7	5	16	M180×3	104	187	293	3	0,26	2,6	3,87	2,54
	4	267,4	199,8	8	15	6	24	M180×3	134	187	293	3	0,33	2,03	3,02	1,98
	4	267,4	–	8	15	6	24	M180×3	134	187	293	3	0,33	2,03	3,02	1,98
	4	303,9	213,1	9,5	17,7	6	24	M180×3	146	187	343	3	0,35	1,95	2,9	1,91

Spherical roller bearings

With withdrawal sleeve

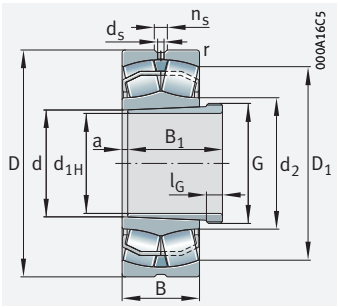

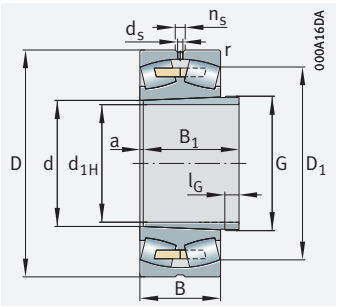

With solid cage, brass or steel

d_{1H} = 170 – 190 mm

Main dimensions				Basic load ratings		Fatigue limit load	Limiting speed	Speed rating	Mass m		Designation ➤695|1.12 ➤696|1.13 X-life ➤684	
d_{1H}	d	D	B	dyn. C_r	stat. C_{0r}	C_{ur}	n_G	$n_{\vartheta r}$	Bearing	Withdrawal sleeve	Bearing	Withdrawal sleeve
				kN	kN	N	min^{-1}	min^{-1}	≈ kg	≈ kg		
170	180	250	52	445	840	59 000	3 200	1 850	7,8	1,96	**23936-S-K-MB**	**AH3936**
	180	280	74	1 040	1 450	173 000	2 600	1 760	15,6	2,87	**23036-E1-XL-K-TVPB**	**AH3036**
	180	280	74	1 040	1 450	173 000	2 600	1 760	16	2,87	**23036-E1A-XL-K-M**	**AH3036**
	180	280	100	1 130	1 770	185 000	2 200	1 420	21,8	3,21	**24036-BE-XL-K30**	**AH24036**
	180	300	96	1 420	1 950	199 000	2 230	1 350	25,9	3,79	**23136-E1-XL-K-TVPB**	**AH3136A**
	180	300	96	1 420	1 950	199 000	2 230	1 350	25,5	3,79	**23136-E1A-XL-K-M**	**AH3136A**
	180	300	118	1 460	2 170	208 000	2 000	980	32,5	3,74	**24136-BE-XL-K30**	**AH24136**
	180	320	86	1 360	1 680	152 000	2 470	1 670	28,5	3,35	**22236-E1-XL-K**	**AH2236G**
	180	320	112	1 720	2 340	178 000	2 010	1 090	36	4,8	**23236-E1-XL-K-TVPB**	**AH3236G**
	180	320	112	1 720	2 340	178 000	2 010	1 090	37	4,8	**23236-E1A-XL-K-M**	**AH3236G**
	180	380	126	2 060	2 460	195 000	2 030	1 230	66,6	5,42	**22336-BE-XL-K**	**AH2336G**
180	190	290	75	1 080	1 550	183 000	2 490	1 660	16,3	3,19	**23038-E1-XL-K-TVPB**	**AH3038G**
	190	290	75	1 080	1 550	183 000	2 490	1 660	17,7	3,19	**23038-E1A-XL-K-M**	**AH3038G**
	190	290	100	1 160	1 860	197 000	2 140	1 330	22,8	3,48	**24038-BE-XL-K30**	**AH24038**
	190	320	104	1 610	2 220	222 000	2 070	1 260	30,3	4,39	**23138-E1-XL-K-TVPB**	**AH3138G**
	190	320	104	1 610	2 220	222 000	2 070	1 260	32,4	4,39	**23138-E1A-XL-K-M**	**AH3138G**
	190	320	128	1 680	2 550	232 000	1 850	880	40,7	4,37	**24138-BE-XL-K30**	**AH24138**
	190	340	92	1 360	1 760	164 000	2 480	1 620	36	3,83	**22238-BE-XL-K**	**AH2238G**
	190	340	120	1 740	2 400	206 000	1 990	1 070	42,6	5,3	**23238-BE-XL-K**	**AH3238G**
	190	400	132	2 220	2 650	213 000	1 940	1 160	77,2	6,02	**22338-BE-XL-K**	**AH2338G**
190	200	280	60	550	1 070	73 000	2 800	1 650	11,5	2,62	**23940-S-K-MB**	**AH3940**
	200	310	82	1 270	1 800	206 000	2 330	1 550	20,8	3,62	**23040-E1-XL-K-TVPB**	**AH3040G**
	200	310	82	1 270	1 800	206 000	2 330	1 550	21,4	3,62	**23040-E1A-XL-K-M**	**AH3040G**
	200	310	109	1 350	2 150	221 000	2 010	1 240	28,9	3,96	**24040-BE-XL-K30**	**AH24040**
	200	340	112	1 610	2 270	193 000	2 040	1 230	40,9	5,6	**23140-BE-XL-K**	**AH3140**
	200	340	140	1 880	2 800	260 000	1 780	840	48,5	5,02	**24140-BE-XL-K30**	**AH24140**
	200	360	98	1 520	1 990	180 000	2 330	1 510	42,3	4,8	**22240-BE-XL-K**	**AH2240**
	200	360	128	1 940	2 700	226 000	1 870	1 000	57,3	6,61	**23240-BE-XL-K**	**AH3240**
	200	420	138	2 440	2 950	232 000	1 830	1 080	87,4	7,64	**22340-BE-XL-K**	**AH2340**

medias *https://www.schaeffler.de/std/1F9A*

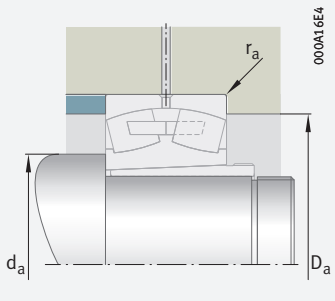

Mounting dimensions

Dimensions										Mounting dimensions			Calculation factors			
d_{1H}	r min.	D_1 ≈	d_2 ≈	d_s	n_s	a ≈	l_G	Thread G	B_1	d_a min.	D_a max.	r_a max.	e	Y_1	Y_2	Y_0
170	2	230,9	–	4,8	9,5	5	13	M190×3	66	188,8	241,2	2	0,2	3,42	5,09	3,34
	2,1	254,3	201,8	8	15	6	17	M190×3	92	190,2	269,8	2,1	0,23	2,9	4,31	2,83
	2,1	254,3	–	8	15	6	17	M190×3	92	190,2	269,8	2,1	0,23	2,9	4,31	2,83
	2,1	244,6	201,7	4,8	9,5	11	16	M190×3	116	190,2	269,8	2,1	0,32	2,1	3,13	2,06
	3	264,8	204,1	8	15	6	19	M190×3	116	194	286	2,5	0,29	2,32	3,45	2,26
	3	264,8	–	8	15	6	19	M190×3	116	194	286	2,5	0,29	2,32	3,45	2,26
	3	255,7	204,8	6,3	12,2	11	16	M190×3	134	194	286	2,5	0,36	1,86	2,77	1,82
	4	285,9	211,3	9,5	17,7	5	17	M190×3	105	197	303	3	0,25	2,71	4,04	2,65
	4	277,3	210,6	8	15	6	25	M190×3	140	197	303	3	0,33	2,07	3,09	2,03
	4	277,3	–	8	15	6	25	M190×3	140	197	303	3	0,33	2,07	3,09	2,03
	4	320,8	224,9	12,5	23,5	6	26	M190×3	154	197	363	3	0,34	1,96	2,92	1,92
180	2,1	264,5	211,9	8	15	6	18	M200×3	96	200,2	279,8	2,1	0,23	2,98	4,44	2,92
	2,1	264,5	–	8	15	6	18	M200×3	96	200,2	279,8	2,1	0,23	2,98	4,44	2,92
	2,1	255	211,9	4,8	9,5	13	18	M200×3	118	200,2	279,8	2,1	0,31	2,2	3,27	2,15
	3	281,6	217	8	15	6	20	M200×3	125	204	306	2,5	0,3	2,28	3,39	2,23
	3	281,6	–	8	15	6	20	M200×3	125	204	306	2,5	0,3	2,28	3,39	2,23
	3	271,6	217,4	6,3	12,2	13	18	M200×3	146	204	306	2,5	0,37	1,82	2,7	1,78
	4	295,2	225,2	9,5	17,7	5	18	M200×3	112	207	323	3	0,26	2,6	3,87	2,54
	4	289	222,4	9,5	17,7	7	25	M200×3	145	207	323	3	0,34	1,98	2,94	1,93
	5	338,1	236,8	12,5	23,5	7	26	M200×3	160	210	380	4	0,34	1,96	2,92	1,92
190	2,1	256,9	–	6,3	12,2	6	16	Tr210×4	77	210,2	269,8	2,1	0,2	3,42	5,09	3,34
	2,1	281,6	223,4	8	15	6	19	Tr210×4	102	210,2	299,8	2,1	0,23	2,9	4,31	2,83
	2,1	281,6	–	8	15	6	19	Tr210×4	102	210,2	299,8	2,1	0,23	2,9	4,31	2,83
	2,1	271,6	223,6	6,3	12,2	13	18	Tr210×4	127	210,2	299,8	2,1	0,32	2,13	3,17	2,08
	3	295,8	230,4	9,5	17,7	6	21	Tr220×4	134	214	326	2,5	0,32	2,1	3,13	2,06
	3	287,9	227,1	6,3	12,2	13	18	Tr210×4	158	214	326	2,5	0,39	1,71	2,54	1,67
	4	310,9	238,2	9,5	17,7	5	19	Tr220×4	118	217	343	3	0,26	2,57	3,83	2,52
	4	305,3	235	9,5	17,7	7	24	Tr220×4	153	217	343	3	0,35	1,95	2,9	1,91
	5	355,1	248,8	12,5	23,5	7	30	Tr220×4	170	220	400	4	0,34	1,98	2,94	1,93

Spherical roller bearings

With withdrawal sleeve

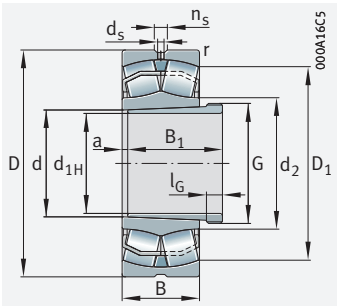

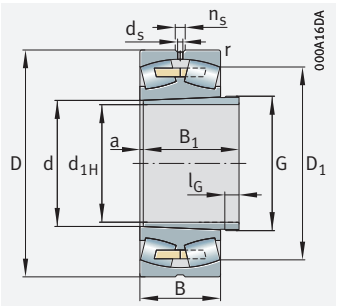

With solid cage, brass or steel

d_{1H} = 200 – 260 mm

Main dimensions				Basic load ratings		Fatigue limit load	Limiting speed	Speed rating	Mass m		Designation ➤695|1.12 ➤696|1.13 X-life ➤684	
d_{1H}	d	D	B	dyn. C_r	stat. C_{0r}	C_{ur}	n_G	$n_{\vartheta r}$	Bearing	Withdrawal sleeve	Bearing	Withdrawal sleeve
				kN	kN	N	min^{-1}	min^{-1}	≈ kg	≈ kg		
200	220	300	60	610	1 240	74 000	2 600	1 460	12,3	4,81	**23944-S-K-MB**	**AH3944**
	220	340	90	1 260	1 900	182 000	2 230	1 450	28,5	7,18	**23044-BE-XL-K**	**AH3044G**
	220	340	118	1 620	2 600	260 000	1 830	1 090	37,7	8,22	**24044-BE-XL-K30**	**AH24044**
	220	370	120	1 860	2 700	223 000	1 860	1 080	50,5	10,4	**23144-BE-XL-K**	**AH3144**
	220	370	150	2 190	3 250	300 000	1 650	750	62,7	10,3	**24144-BE-XL-K30**	**AH24144**
	220	400	108	1 840	2 360	216 000	2 140	1 350	58,3	9,17	**22244-BE-XL-K**	**AH2244**
	220	400	144	2 380	3 300	270 000	1 700	880	75,3	13,6	**23244-BE-XL-K**	**AH2344**
	220	460	145	2 800	3 400	270 000	1 690	950	114	13,6	**22344-BE-XL-K**	**AH2344**
220	240	320	60	640	1 370	96 000	2 440	1 310	13,4	5,26	**23948-K-MB**	**AH3948**
	240	360	92	1 350	2 120	200 000	2 080	1 310	31,6	8,92	**23048-BE-XL-K**	**AH3048**
	240	360	118	1 670	2 850	280 000	1 710	980	42,3	9,03	**24048-BE-XL-K30**	**AH24048**
	240	400	128	2 130	3 150	255 000	1 700	970	62	12,3	**23148-BE-XL-K**	**AH3148**
	240	400	160	2 600	3 900	340 000	1 470	650	81,5	12,6	**24148-BE-XL-K30**	**AH24148**
	240	440	120	2 230	2 900	255 000	1 900	1 200	81,8	11,3	**22248-BE-XL-K**	**AH2248**
	240	440	160	2 850	4 000	315 000	1 500	770	102	15,6	**23248-BE-XL-K**	**AH2348**
	240	500	155	3 200	4 050	315 000	1 510	830	148	15,6	**22348-BEA-XL-K-MB1**	**AH2348**
240	260	360	75	940	1 940	111 000	2 100	1 190	22,4	7,7	**23952-K-MB**	**AH3952G**
	260	400	104	1 670	2 600	239 000	1 850	1 170	45,9	10,8	**23052-BE-XL-K**	**AH3052**
	260	400	140	2 210	3 650	345 000	1 510	880	61,2	11,6	**24052-BE-XL-K30**	**AH24052**
	260	440	144	2 600	3 900	310 000	1 500	860	87,2	15,1	**23152-BE-XL-K**	**AH3152G**
	260	440	180	3 150	4 900	400 000	1 290	560	108	15,5	**24152-BE-XL-K30**	**AH24152**
	260	480	130	2 600	3 450	295 000	1 720	1 070	104	13,3	**22252-BEA-XL-K-MB1**	**AH2252G**
	260	480	174	3 350	4 750	370 000	1 360	690	134	18,7	**23252-BEA-XL-K-MB1**	**AH2352G**
	260	540	165	3 650	4 650	360 000	1 390	740	179	18,7	**22352-BEA-XL-K-MB1**	**AH2352G**
260	280	380	75	970	2 040	133 000	2 000	1 100	24,7	8,3	**23956-K-MB**	**AH3956G**
	280	420	106	1 780	2 850	260 000	1 740	1 090	49,3	12	**23056-BE-XL-K**	**AH3056**
	280	420	140	2 290	3 950	370 000	1 420	800	67,8	12,6	**24056-BE-XL-K30**	**AH24056**
	280	460	146	2 750	4 200	325 000	1 420	790	93,1	16,7	**23156-BE-XL-K**	**AH3156G**
	280	460	180	3 300	5 200	435 000	1 230	520	114	16,7	**24156-BE-XL-K30**	**AH24156**
	280	500	130	2 750	3 700	320 000	1 650	990	109	14,4	**22256-BEA-XL-K-MB1**	**AH2256G**
	280	500	176	3 550	5 200	395 000	1 280	630	143,7	20,9	**23256-BEA-XL-K-MB1**	**AH2356G**
	280	580	175	4 150	5 300	405 000	1 280	670	223	20,9	**22356-BEA-XL-K-MB1**	**AH2356G**

medias *https://www.schaeffler.de/std/1F9A*

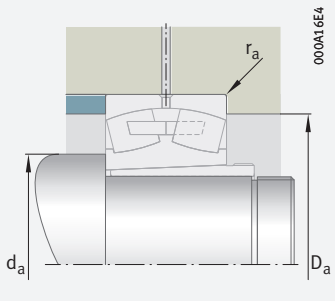

Mounting dimensions

Dimensions										Mounting dimensions			Calculation factors			
d_{1H}	r min.	D_1 ≈	d_2 ≈	d_s	n_s	a ≈	l_G	Thread G	B_1	d_a min.	D_a max.	r_a max.	e	Y_1	Y_2	Y_0
200	2,1	277,4	–	6,3	12,2	6	16	Tr230×4	77	230,2	289,8	2,1	0,18	3,76	5,59	3,67
	3	304,5	248,8	8	15	6	20	Tr230×4	111	232,4	327,6	2,5	0,24	2,81	4,19	2,75
	3	295,7	245	6,3	12,2	14	18	Tr230×4	138	232,4	327,6	2,5	0,32	2,1	3,13	2,06
	4	323	254,8	9,5	17,7	6	23	Tr240×4	145	237	353	3	0,31	2,15	3,2	2,1
	4	314,3	247,6	6,3	12,2	14	20	Tr230×4	170	237	353	3	0,39	1,74	2,59	1,7
	4	346,6	260,1	9,5	17,7	6	20	Tr240×4	130	237	383	3	0,26	2,57	3,83	2,52
	4	338	255,8	9,5	17,7	8	30	Tr240×4	181	237	383	3	0,36	1,9	2,83	1,86
	5	391,1	273,4	12,5	23,5	8	30	Tr240×4	181	240	440	4	0,33	2,06	3,06	2,01
220	2,1	297,8	–	6,3	12,2	6	16	Tr250×4	77	250,2	309,8	2,1	0,17	4,05	6,04	3,96
	3	324,6	269,5	8	15	7	21	Tr260×4	116	252,4	347,6	2,5	0,23	2,98	4,44	2,92
	3	317,2	268,5	6,3	12,2	15	20	Tr250×4	138	252,4	347,6	2,5	0,3	2,28	3,39	2,23
	4	349,9	275,9	9,5	17,7	7	25	Tr260×4	154	257	383	3	0,31	2,18	3,24	2,13
	4	339	267,3	6,3	12,2	15	20	Tr260×4	180	257	383	3	0,39	1,71	2,54	1,67
	4	380,4	285,6	12,5	23,5	6	21	Tr260×4	144	257	423	3	0,26	2,55	3,8	2,5
	4	370,8	280,8	12,5	23,5	8	30	Tr260×4	189	257	423	3	0,36	1,87	2,79	1,83
	5	426,4	–	12,5	23,5	8	30	Tr260×4	189	260	480	4	0,32	2,12	3,15	2,07
240	2,1	330,5	–	8	15	6	18	Tr280×4	94	270,2	349,8	2,1	0,19	3,54	5,27	3,46
	4	358,7	295,5	9,5	17,7	7	23	Tr280×4	128	274,6	385,4	3	0,23	2,9	4,31	2,83
	4	349	288,3	6,3	12,2	16	20	Tr270×4	162	274,6	385,4	3	0,32	2,09	3,11	2,04
	4	382,7	301,7	9,5	17,7	7	26	Tr280×4	172	277	423	3	0,32	2,12	3,15	2,07
	4	370,6	292,2	8	15	16	22	Tr280×4	202	277	423	3	0,4	1,67	2,49	1,63
	5	415,1	–	12,5	23,5	6	23	Tr280×4	155	280	460	4	0,26	2,57	3,83	2,52
	5	404,3	–	12,5	23,5	8	30	Tr280×4	205	280	460	4	0,36	1,87	2,79	1,83
	6	460,6	–	12,5	23,5	8	30	Tr280×4	205	286	514	5	0,31	2,15	3,2	2,1
260	2,1	350	–	8	15	6	18	Tr300×4	94	290,2	369,8	2,1	0,18	3,76	5,59	3,67
	4	379,2	314,3	9,5	17,7	8	24	Tr300×4	131	294,6	405,4	3	0,22	3,01	4,48	2,94
	4	370,5	310,3	6,3	12,2	17	22	Tr290×4	162	294,6	405,4	3	0,3	2,23	3,32	2,18
	5	403,4	321,4	9,5	17,7	8	28	Tr300×4	175	300	440	4	0,31	2,21	3,29	2,16
	5	392,4	312,8	8	15	17	22	Tr300×4	202	300	440	4	0,38	1,76	2,62	1,72
	5	436	–	12,5	23,5	8	24	Tr300×4	155	300	480	4	0,25	2,71	4,04	2,65
	5	425,4	–	12,5	23,5	8	30	Tr300×4	212	300	480	4	0,34	1,96	2,92	1,92
	6	495,5	–	12,5	23,5	8	30	Tr300×4	212	306	554	5	0,31	2,18	3,24	2,13

Spherical roller bearings

With withdrawal sleeve

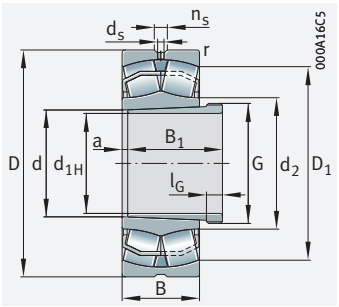

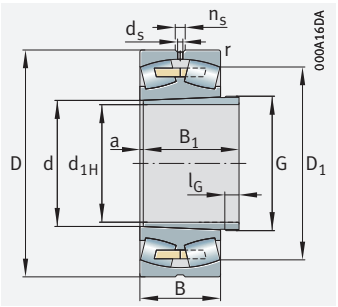

With solid cage, brass or steel

d_{1H} = 280 – 360 mm

Main dimensions				Basic load ratings		Fatigue limit load	Limiting speed	Speed rating	Mass m		Designation ➤695 | 1.12 ➤696 | 1.13 X-life ➤684	
d_{1H}	d	D	B	dyn. C_r	stat. C_{0r}	C_{ur}	n_G	$n_{\vartheta r}$	Bearing	Withdrawal sleeve	Bearing	Withdrawal sleeve
				kN	kN	N	min^{-1}	min^{-1}	≈ kg	≈ kg		
280	300	420	90	1 270	2 650	170 000	1 780	1 000	39,1	10,8	**23960-B-K-MB**	**AH3960G**
	300	460	118	2 160	3 450	305 000	1 570	980	68,4	14,4	**23060-BE-XL-K**	**AH3060**
	300	460	160	2 850	4 900	435 000	1 250	720	97	15,5	**24060-BE-XL-K30**	**AH24060**
	300	500	160	3 250	4 950	375 000	1 300	720	126	20	**23160-BEA-XL-K-MB1**	**AH3160G**
	300	500	200	3 950	6 400	500 000	1 100	450	161	20,1	**24160-BE-XL-K30**	**AH24160**
	300	540	140	3 100	4 250	360 000	1 500	900	139	17,2	**22260-BEA-XL-K-MB1**	**AH2260G**
	300	540	192	4 100	6 100	450 000	1 160	560	187	24,6	**23260-BEA-XL-K-MB1**	**AH3260G-H**
	300	620	185	4 650	6 000	450 000	1 190	610	263,6	26	**22360-BEA-XL-K-MB1**	**AH3260-H**
300	320	440	90	1 310	2 750	206 000	1 700	930	41	11,5	**23964-K-MB**	**AH3964G-H**
	320	480	121	2 300	3 750	330 000	1 480	920	75,6	15,9	**23064-BEA-XL-K-MB1**	**AH3064G-H**
	320	480	160	2 950	5 200	465 000	1 200	670	99	16,6	**24064-BEA-XL-K30-MB1**	**AH24064-H**
	320	540	176	3 800	5 900	425 000	1 170	650	161	23,6	**23164-BEA-XL-K-MB1**	**AH3164G-H**
	320	540	218	4 600	7 300	570 000	1 010	415	205	23,4	**24164-BE-XL-K30**	**AH24164-H**
	320	580	150	3 550	4 700	405 000	1 410	850	171	19,6	**22264-BEA-XL-K-MB1**	**AH2264G-H**
	320	580	208	4 650	7 000	510 000	1 060	510	229,6	28,9	**23264-BEA-XL-K-MB1**	**AH3264G-H**
320	340	520	133	2 700	4 400	375 000	1 360	840	101	18,6	**23068-BEA-XL-K-MB1**	**AH3068G-H**
	340	520	180	3 550	6 200	530 000	1 080	610	136	21,1	**24068-BEA-XL-K30-MB1**	**AH24068-H**
	340	580	190	4 350	6 600	480 000	1 090	600	204	27,5	**23168-BEA-XL-K-MB1**	**AH3168G-H**
	340	580	243	5 400	8 800	640 000	900	370	263	28	**24168-BE-XL-K30**	**AH24168-H**
	340	620	224	5 300	7 900	580 000	1 000	475	292	33,6	**23268-BEA-XL-K-MB1**	**AH3268G-H**
	340	710	212	6 000	8 000	570 000	1 010	500	403	35,3	**22368-BEA-XL-K-MB1**	**AH3268-H**
340	360	480	90	1 440	3 200	216 000	1 540	800	45	13	**23972-K-MB**	**AH3972G-H**
	360	540	134	2 800	4 650	400 000	1 300	790	104	20,5	**23072-BEA-XL-K-MB1**	**AH3072G-H**
	360	540	180	3 650	6 600	570 000	1 040	570	141	22,3	**24072-BEA-XL-K30-MB1**	**AH24072-H**
	360	600	192	4 550	7 100	510 000	1 040	560	215	29,8	**23172-BEA-XL-K-MB1**	**AH3172G-H**
	360	600	243	5 600	9 100	680 000	890	350	272	29,7	**24172-BE-XL-K30**	**AH24172-H**
	360	650	232	5 700	8 900	630 000	930	430	330,5	37,3	**23272-BEA-XL-K-MB1**	**AH3272G-H**
	360	750	224	6 600	8 800	620 000	710	470	476	41,1	**22372-BEA-XL-K-MB1**	**AH3272-H**
360	380	520	106	1 780	4 000	270 000	1 340	750	66,3	16,1	**23976-K-MB**	**AH3976G-H**
	380	560	135	2 900	5 000	420 000	1 230	740	109	22,1	**23076-BEA-XL-K-MB1**	**AH3076G-H**
	380	560	180	3 750	7 000	590 000	990	530	151	24	**24076-BEA-XL-K30-MB1**	**AH24076-H**
	380	620	194	4 700	7 600	540 000	990	530	227	32	**23176-BEA-XL-K-MB1**	**AH3176G-H**
	380	620	243	5 800	9 700	730 000	850	325	285	31,8	**24176-BE-XL-K30**	**AH24176-H**
	380	680	240	6 200	9 600	680 000	890	400	374	41,3	**23276-BEA-XL-K-MB1**	**AH3276G-H**

medias *https://www.schaeffler.de/std/1F9A*

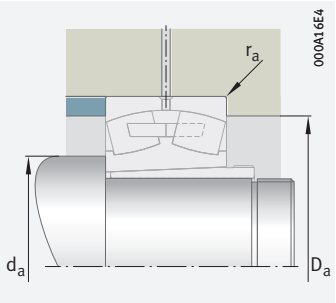

Mounting dimensions

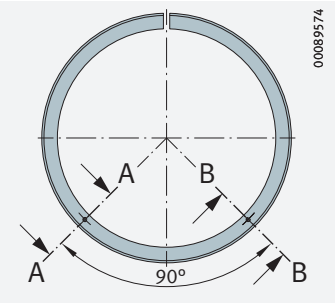

Pump connectors for hydraulic withdrawal sleeve

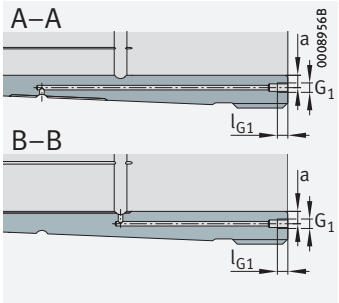

Hydraulic withdrawal sleeve (..-H) Mounting dimensions

Dimensions										Mounting dimensions						Calculation factors			
d_{1H}	r min.	D_1 ≈	d_2 ≈	d_s	n_s	a ≈	l_G	Thread G	B_1	d_a min.	D_a max.	r_a max.	G_1	a	l_{G1}	e	Y_1	Y_2	Y_0
280	3	384,6	–	9,5	17,7	7	21	Tr320×5	112	312,4	407,6	2,5	–	–	–	0,2	3,42	5,09	3,34
	4	413	340	9,5	17,7	8	26	Tr320×5	145	314,6	445,4	3	–	–	–	0,23	2,92	4,35	2,86
	4	403	334,8	8	15	18	24	Tr310×5	184	314,6	445,4	3	–	–	–	0,32	2,12	3,15	2,07
	5	436,8	–	9,5	17,7	8	30	Tr320×5	192	320	480	4	–	–	–	0,31	2,18	3,24	2,13
	5	422,8	338,2	8	15	18	24	Tr320×5	224	320	480	4	–	–	–	0,39	1,72	2,56	1,68
	5	470,5	–	12,5	23,5	8	26	Tr320×5	170	320	520	4	–	–	–	0,25	2,71	4,04	2,65
	5	458	–	12,5	23,5	8	34	Tr320×5	228	320	520	4	$G^1/_8$	8,5	12	0,35	1,92	2,86	1,88
	7,5	530,3	–	12,5	23,5	8	34	Tr330×5	228	332	588	6	$G^1/_8$	8,5	12	0,31	2,21	3,29	2,16
300	3	406,2	–	9,5	17,7	7	21	Tr340×5	112	332,4	427,6	2,5	M8	8,5	12	0,19	3,62	5,39	3,54
	4	433	–	9,5	17,7	8	27	Tr340×5	149	334,6	465,4	3	$G^1/_8$	8,5	12	0,22	3,01	4,48	2,94
	4	422,3	–	8	15	18	24	Tr330×5	184	334,6	465,4	3	M6	8,5	7	0,3	2,23	3,32	2,18
	5	469,3	–	12,5	23,5	8	31	Tr340×5	209	340	520	4	$G^1/_8$	8,5	12	0,32	2,13	3,17	2,08
	5	455,5	359	9,5	17,7	18	24	Tr340×5	242	340	520	4	$G^1/_8$	8,5	12	0,4	1,69	2,52	1,65
	5	505,1	–	12,5	23,5	10	27	Tr340×5	180	340	560	4	$G^1/_8$	8,5	12	0,25	2,71	4,04	2,65
	5	490,4	–	12,5	23,5	8	36	Tr340×5	246	340	560	4	$G^1/_8$	8,5	12	0,35	1,91	2,85	1,87
320	5	467,1	–	12,5	23,5	9	28	Tr360×5	162	358	502	4	$G^1/_8$	8,5	12	0,23	2,92	4,35	2,86
	5	456,1	–	9,5	17,7	19	26	Tr360×5	206	358	502	4	$G^1/_8$	8,5	12	0,32	2,12	3,15	2,07
	5	502,6	–	12,5	23,5	9	33	Tr360×5	225	360	560	4	$G^1/_8$	8,5	12	0,32	2,1	3,13	2,06
	5	484,1	382,8	9,5	17,7	19	26	Tr360×5	269	360	560	4	$G^1/_8$	8,5	12	0,42	1,62	2,42	1,59
	6	523,5	–	12,5	23,5	9	38	Tr360×5	264	366	594	5	$G^1/_8$	8,5	12	0,36	1,85	2,76	1,81
	7,5	605,95	–	12,5	23,5	9	38	Tr370×5	264	372	678	6	$G^1/_8$	8,5	12	0,31	2,2	3,27	2,15
340	3	447,1	–	9,5	17,7	7	21	Tr380×5	112	372,4	467,6	2,5	M8	8,5	12	0,17	4,05	6,04	3,96
	5	487,6	–	12,5	23,5	9	30	Tr380×5	167	378	522	4	$G^1/_8$	8,5	12	0,22	3,04	4,53	2,97
	5	476,4	–	9,5	17,7	20	26	Tr380×5	206	378	522	4	$G^1/_8$	8,5	12	0,3	2,23	3,32	2,18
	5	523,3	–	12,5	23,5	9	35	Tr380×5	229	380	580	4	$G^1/_8$	8,5	12	0,31	2,18	3,24	2,13
	5	505,9	399,4	9,5	17,7	20	26	Tr380×5	269	380	580	4	$G^1/_8$	8,5	12	0,4	1,69	2,52	1,65
	6	550,8	–	12,5	23,5	9	40	Tr380×5	274	386	624	5	$G^1/_8$	8,5	12	0,36	1,9	2,83	1,86
	7,5	640	–	12,5	23,5	9	40	Tr400×5	274	392	718	6	$G^1/_8$	8,5	12	0,31	2,2	3,27	2,15
360	4	477,6	–	9,5	17,7	8	22	Tr400×5	130	394,6	505,4	3	M8	8,5	12	0,19	3,58	5,33	3,5
	5	508,1	–	12,5	23,5	10	31	Tr400×5	170	398	542	4	$G^1/_8$	8,5	12	0,21	3,17	4,72	3,1
	5	497,9	–	9,5	17,7	20	28	Tr400×5	208	398	542	4	$G^1/_8$	8,5	12	0,29	2,33	3,47	2,28
	5	543,6	–	12,5	23,5	10	36	Tr400×5	232	400	600	4	$G^1/_8$	8,5	12	0,3	2,25	3,34	2,2
	5	528,4	421	9,5	17,7	20	28	Tr400×5	271	400	600	4	$G^1/_8$	8,5	12	0,38	1,76	2,62	1,72
	6	578,1	–	12,5	23,5	10	42	Tr400×5	284	406	654	5	$G^1/_8$	8,5	12	0,35	1,92	2,86	1,88

Spherical roller bearings

With withdrawal sleeve

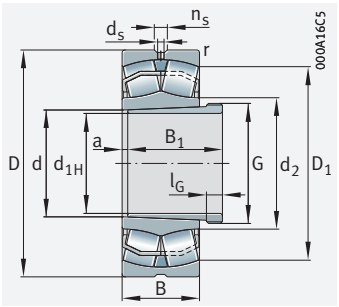

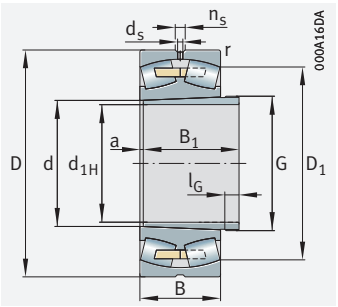

With solid cage, brass or steel

d_{1H} = 380 – 480 mm

Main dimensions				Basic load ratings		Fatigue limit load	Limiting speed	Speed rating	Mass m		Designation ➤695 | 1.12 ➤696 | 1.13 X-life ➤684	
d_{1H}	d	D	B	dyn. C_r	stat. C_{0r}	C_{ur}	n_G	$n_{\vartheta r}$	Bearing	Withdrawal sleeve	Bearing	Withdrawal sleeve
				kN	kN	N	min^{-1}	min^{-1}	≈ kg	≈ kg		
380	400	540	106	1 830	4 150	280 000	1 290	710	68,2	17	**23980-B-K-MB**	**AH3980G-H**
	400	600	148	3 400	5 700	480 000	1 150	690	144	25,4	**23080-BEA-XL-K-MB1**	**AH3080G-H**
	400	600	200	4 500	8 100	680 000	920	495	196	27,8	**24080-BEA-XL-K30-MB1**	**AH24080-H**
	400	650	200	5 000	8 100	590 000	950	495	246	35,1	**23180-BEA-XL-K-MB1**	**AH3180G-H**
	400	650	250	6 200	10 600	790 000	800	300	323	34,4	**24180-BE-XL-K30**	**AH24180-H**
	400	720	256	7 000	10 900	750 000	820	370	450	47,1	**23280-BEA-XL-K-MB1**	**AH3280G-H**
	400	820	243	7 800	10 500	730 000	850	410	605	51,7	**22380-BEA-XL-K-MB1**	**AH3280-H**
400	420	560	106	1 910	4 450	310 000	1 230	660	72,1	17,8	**23984-K-MB**	**AH3984G-H**
	420	620	150	3 650	6 300	520 000	1 090	650	153	27,2	**23084-BEA-XL-K-MB1**	**AH3084G-H**
	420	620	200	4 600	8 500	720 000	890	465	205	29,6	**24084-BEA-XL-K30-MB1**	**AH24080-H**
	420	700	224	6 000	9 600	660 000	860	455	342	42	**23184-BEA-XL-K-MB1**	**AH3184G-H**
	420	700	280	7 400	12 600	890 000	720	270	431	41	**24184-BE-XL-K30**	**AH24184-H**
	420	760	272	7 800	12 300	820 000	770	340	537	53,6	**23284-BEA-XL-K-MB1**	**AH3284G-H**
420	440	600	118	2 230	5 200	305 000	1 130	620	98,3	21,2	**23988-K-MB**	**AH3988-H**
	440	650	157	3 950	6 900	560 000	1 030	610	176	30	**23088-BEA-XL-K-MB1**	**AHX3088G-H**
	440	650	212	5 100	9 500	780 000	830	435	238	32,8	**24088-BEA-XL-K30-MB1**	**AH24088-H**
	440	720	226	6 200	10 200	700 000	820	430	358	44,9	**23188-BEA-XL-K-MB1**	**AHX3188G-H**
	440	720	280	7 600	12 900	940 000	710	260	446	42,9	**24188-BE-XL-K30**	**AH24188-H**
	440	790	280	8 300	13 200	880 000	730	320	592	58,2	**23288-BEA-XL-K-MB1**	**AHX3288G-H**
440	460	620	118	2 270	5 400	380 000	1 080	590	103	22,2	**23992-B-K-MB**	**AH3992-H**
	460	680	163	4 300	7 500	610 000	980	580	201	32,9	**23092-BEA-XL-K-MB1**	**AHX3092G-H**
	460	760	240	6 900	11 500	760 000	770	395	431	50,3	**23192-BEA-XL-K-MB1**	**AHX3192G-H**
	460	760	300	8 500	14 500	1 030 000	660	241	531	48,7	**24192-BEA-XL-K30-MB1**	**AH24192-H**
	460	830	296	9 200	14 700	960 000	690	295	695	65,6	**23292-BEA-XL-K-MB1**	**AHX3292G-H**
460	480	650	128	2 550	6 000	470 000	1 040	570	121	25,7	**23996-B-K-MB**	**AH3996-H**
	480	700	165	4 450	8 000	640 000	950	550	210	35	**23096-BEA-XL-K-MB1**	**AHX3096G-H**
	480	700	218	5 600	10 700	890 000	770	385	279	37,2	**24096-BEA-XL-K30-MB1**	**AH24096-H**
	480	790	248	7 400	12 400	820 000	740	375	479	54,8	**23196-BEA-XL-K-MB1**	**AHX3196G-H**
	480	790	308	9 000	15 500	1 100 000	640	227	594	52,9	**24196-BEA-XL-K30-MB1**	**AH24196-H**
	480	870	310	10 000	16 200	1 040 000	650	275	804	72,4	**23296-BEA-XL-K-MB1**	**AHX3296G-H**
480	500	670	128	2 600	6 300	410 000	990	540	124	27,7	**239/500-K-MB**	**AH39/500-H**
	500	720	167	4 700	8 700	760 000	890	510	223	42,5	**230/500-BEA-XL-K-MB1**	**AHX30/500-H**
	500	830	264	8 300	13 900	890 000	690	350	574	70,9	**231/500-BEA-XL-K-MB1**	**AHX31/500-H**
	500	830	325	10 000	17 300	1 190 000	600	209	692	58,8	**241/500-BEA-XL-K30-MB1**	**AH241/500-H**

medias *https://www.schaeffler.de/std/1F9A*

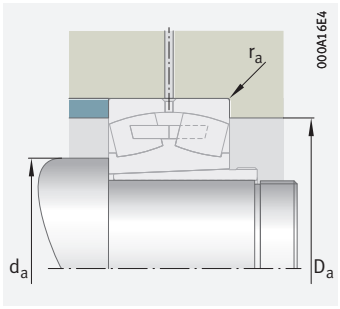

Mounting dimensions

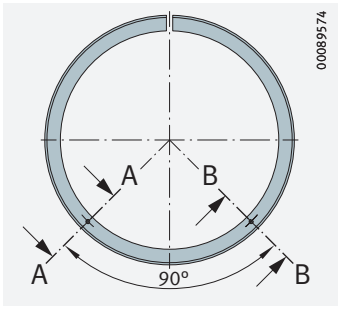

Pump connectors for hydraulic withdrawal sleeve

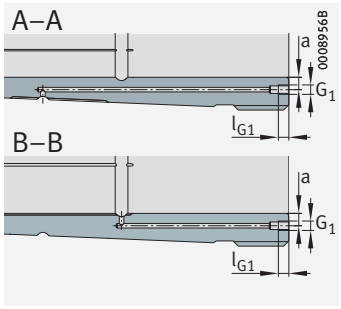

Hydraulic withdrawal sleeve (..-H) Mounting dimensions

Dimensions										Mounting dimensions						Calculation factors			
d_{1H}	r min.	D_1 ≈	d_2 ≈	d_s	n_s	a ≈	l_G	Thread G	B_1	d_a min.	D_a max.	r_a max.	G_1	a	l_{G1}	e	Y_1	Y_2	Y_0
380	4	499	–	9,5	17,7	8	22	Tr420×5	130	414,6	525,4	3	M8	8,5	12	0,18	3,71	5,52	3,63
	5	541,9	–	12,5	23,5	10	33	Tr420×5	183	418	582	4	$G^1/_8$	8,5	12	0,22	3,07	4,57	3
	5	529,4	–	12,5	23,5	20	28	Tr420×5	228	418	582	4	$G^1/_8$	8,5	12	0,3	2,23	3,32	2,18
	6	571,4	–	12,5	23,5	10	38	Tr420×5	240	426	624	5	$G^1/_8$	8,5	12	0,29	2,3	3,42	2,25
	6	556,5	448,8	12,5	23,5	20	28	Tr420×5	278	426	624	5	$G^1/_8$	8,5	12	0,37	1,82	2,7	1,78
	6	611,2	–	12,5	23,5	10	44	Tr420×5	302	426	694	5	$G^1/_8$	8,5	12	0,36	1,9	2,83	1,86
	7,5	701,3	–	12,5	23,5	10	44	Tr440×5	302	432	788	6	$G^1/_8$	8,5	12	0,31	2,21	3,29	2,16
400	4	519,5	–	9,5	17,7	8	22	Tr440×5	130	434,6	545,4	3	M8	8,5	12	0,18	3,85	5,73	3,76
	5	560,7	–	12,5	23,5	10	34	Tr440×5	186	438	602	4	$G^1/_8$	8,5	12	0,21	3,17	4,72	3,1
	5	529,4	–	12,5	23,5	22	30	Tr440×5	230	438	602	4	$G^1/_8$	8,5	12	0,29	2,32	3,45	2,26
	6	609,8	–	12,5	23,5	10	40	Tr440×5	266	446	674	5	$G^1/_8$	8,5	12	0,31	2,18	3,24	2,13
	6	592,2	472,7	12,5	23,5	22	30	Tr440×5	310	446	674	5	$G^1/_8$	8,5	12	0,39	1,72	2,56	1,68
	7,5	643,4	–	12,5	23,5	10	46	Tr440×5	321	452	728	6	$G^1/_8$	8,5	12	0,36	1,89	2,81	1,84
420	4	552,8	–	12,5	23,5	8	25	Tr460×5	145	454,6	585,4	3	$G^1/_8$	8,5	12	0,18	3,66	5,46	3,58
	6	589,3	–	12,5	23,5	11	35	Tr460×5	194	463	627	5	$G^1/_8$	8,5	12	0,21	3,17	4,72	3,1
	6	578,8	–	12,5	23,5	22	30	Tr460×5	242	463	627	5	$G^1/_8$	8,5	12	0,29	2,3	3,42	2,25
	6	630,2	–	12,5	23,5	11	42	Tr460×5	270	466	694	5	$G^1/_8$	8,5	12	0,3	2,25	3,34	2,2
	6	614,3	614,2	12,5	23,5	22	30	Tr460×5	310	466	694	5	$G^1/_8$	8,5	12	0,38	1,78	2,65	1,74
	7,5	670,7	–	12,5	23,5	11	48	Tr460×5	330	472	758	6	$G^1/_8$	8,5	12	0,35	1,91	2,85	1,87
440	4	573,3	–	12,5	23,5	8	25	Tr480×5	145	474,6	605,4	3	$G^1/_8$	8,5	12	0,18	3,85	5,73	3,76
	6	616,7	–	12,5	23,5	11	37	Tr480×5	202	483	657	5	$G^1/_8$	8,5	12	0,21	3,17	4,72	3,1
	7,5	663,4	–	12,5	23,5	11	43	Tr480×5	285	492	728	6	$G^1/_8$	8,5	12	0,31	2,21	3,29	2,16
	7,5	647,1	–	12,5	23,5	23	32	Tr480×5	332	492	728	6	$G^1/_8$	8,5	12	0,38	1,76	2,62	1,72
	7,5	704,9	–	12,5	23,5	11	50	Tr480×5	349	492	798	6	$G^1/_8$	8,5	12	0,36	1,9	2,83	1,86
460	5	598,8	–	12,5	23,5	9	28	Tr500×5	158	498	632	4	$G^1/_8$	8,5	12	0,18	3,76	5,59	3,67
	6	637,3	–	12,5	23,5	12	38	Tr500×5	205	503	677	5	$G^1/_8$	8,5	12	0,21	3,27	4,87	3,2
	6	628,1	–	12,5	23,5	23	32	Tr500×5	250	503	677	5	$G^1/_8$	8,5	12	0,28	2,43	3,61	2,37
	7,5	690,4	–	12,5	23,5	12	45	Tr500×5	295	512	758	6	$G^1/_8$	8,5	12	0,3	2,23	3,32	2,18
	7,5	673,14	–	12,5	23,5	25	35	Tr500×5	343	512	758	6	$G^1/_8$	8,5	12	0,38	1,79	2,67	1,75
	7,5	737,6	–	12,5	23,5	12	52	Tr500×5	364	512	838	6	$G^1/_8$	8,5	12	0,36	1,9	2,83	1,86
480	5	619,3	–	12,5	23,5	10	32	Tr520×6	162	518	652	4	$G^1/_8$	8,5	12	0,17	3,9	5,81	3,81
	6	656,5	–	12,5	23,5	12	40	Tr540×6	209	523	697	5	$G^1/_8$	8,5	12	0,21	3,24	4,82	3,16
	7,5	723,1	–	12,5	23,5	12	47	Tr550×6	313	532	798	6	$G^1/_8$	8,5	12	0,31	2,2	3,27	2,15
	7,5	705,2	–	12,5	23,5	25	37	Tr520×6	362	532	798	6	$G^1/_8$	8,5	12	0,38	1,78	2,65	1,74

Spherical roller bearings

With withdrawal sleeve

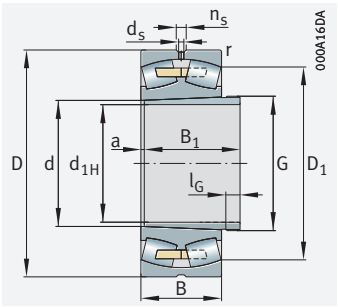

With solid cage, brass or steel

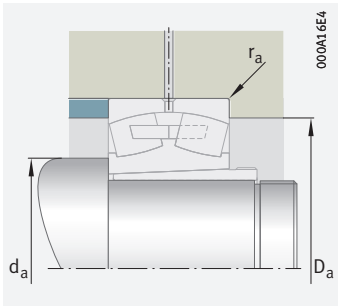

Mounting dimensions

d_{1H} = 500 – 630 mm

Main dimensions				Basic load ratings		C_{ur}	n_G	$n_{\vartheta r}$	Mass m		Designation ➤695|1.12 ➤696|1.13 X-life ➤684	
d_{1H}	d	D	B	dyn. C_r	stat. C_{0r}				Bearing	With-drawal sleeve	Bearing	Withdrawal sleeve
				kN	kN	kN	min^{-1}	min^{-1}	≈ kg	≈ kg		
500	530	710	136	2 850	6 900	395	930	500	146	43,1	**239/530-K-MB**	**AH39/530-H**
	530	780	185	5 600	10 100	860	820	475	302	61,7	**230/530-BEA-XL-K-MB1**	**AH30/530A-H**
	530	870	272	8 900	15 000	960	660	325	634	92,3	**231/530-BEA-XL-K-MB1**	**AH31/530A-H**
	530	870	335	10 700	19 100	1 290	560	190	778	88,2	**241/530-BEA-XL-K30-MB1**	**AH241/530-H**
	530	980	355	12 700	20 400	1 270	570	235	1 183	132	**232/530-BEA-XL-K-MB1**	**AH32/530A-H**
530	560	750	140	3 100	7 600	540	880	465	176	47	**239/560-B-K-MB**	**AH39/560-H**
	560	820	195	6 100	11 200	940	760	440	350	68,4	**230/560-BEA-XL-K-MB1**	**AH30/560A-H**
	560	920	280	9 700	16 400	1 060	630	300	731	101	**231/560-BEA-XL-K-MB1**	**AH31/560A-H**
	560	920	355	12 000	21 000	1 440	530	177	914	101	**241/560-BEA-XL-K30-MB1**	**AH241/560-H**
	560	1 030	355	13 000	21 800	1 380	540	220	1 346	144	**232/560-BEA-XL-K-MB1**	**AH32/560A-H**
570	600	800	150	3 450	8 600	640	810	430	210	55,6	**239/600-B-K-MB**	**AH39/600-H**
	600	870	200	6 600	12 300	1 020	710	405	398	75	**230/600-BEA-XL-K-MB1**	**AH30/600A-H**
	600	920	355	13 300	24 000	1 580	485	159	1 099	118	**241/600-BEA-XL-K30-MB1**	**AH241/600-H**
	600	980	300	10 900	18 600	1 180	580	275	880	116	**231/600-BEA-XL-K-MB1**	**AH31/600A-H**
	600	1 090	388	15 200	25 500	1 530	495	194	1 584	164	**232/600-BEA-XL-K-MB1**	**AH32/600A-H**
600	630	850	165	4 100	9 900	720	740	405	283	64,5	**239/630-B-K-MB**	**AH39/630-H**
	630	920	212	7 400	13 700	1 130	670	380	476	87,3	**230/630-BEA-XL-K-MB1**	**AH30/630A-H**
	630	920	290	9 400	18 600	1 390	550	265	645	95,1	**240/630-BEA-XL-K30-MB1**	**AH240/630-H**
	630	1 030	315	12 000	20 600	1 280	540	255	1 025	136	**231/630-BEA-XL-K-MB1**	**AH31/630A-H**
	630	1 030	400	14 800	27 000	1 720	455	146	1 292	132	**241/630-BEA-XL-K30-MB1**	**AH241/630-H**
	630	1 150	412	16 900	28 500	1 680	460	179	1 885	188	**232/630-BEA-XL-K-MB1**	**AH32/630A-H**
630	670	900	170	4 300	10 600	760	710	375	310	87,7	**239/670-B-K-MB**	**AH39/670-H**
	670	980	230	8 400	15 900	1 100	630	480	581	124	**230/670-BEA-XL-K-MB1**	**AH30/670A-H**
	670	980	308	10 500	21 100	1 540	510	241	775	137	**240/670-BEA-XL-K30-MB1**	**AH240/670-H**
	670	1 090	336	13 300	23 800	1 410	370	231	1 211	185	**231/670-BEA-XL-K-MB1**	**AH31/670A-H**
	670	1 090	412	16 100	29 500	1 900	430	134	1 485	183	**241/670-BEA-XL-K30-MB1**	**AH241/670-H**
	670	1 220	438	19 000	32 500	1 860	425	162	2 240	252	**232/670-BEA-XL-K-MB1**	**AH32/670A-H**

medias *https://www.schaeffler.de/std/1F9A*

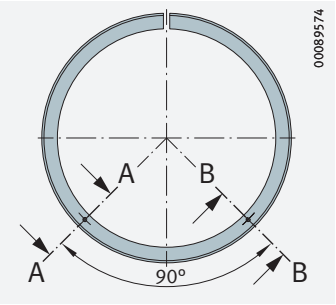

Pump connectors for hydraulic withdrawal sleeve

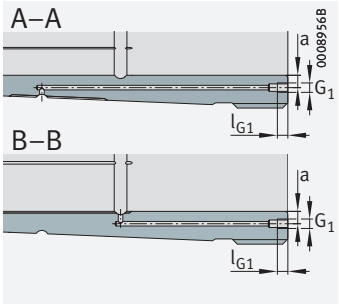

Hydraulic withdrawal sleeve (..-H) Mounting dimensions

Dimensions									Mounting dimensions						Calculation factors			
d_{1H}	r	D_1	d_s	n_s	a	l_G	Thread G	B_1	d_a	D_a	r_a	G_1	a	l_{G1}	e	Y_1	Y_2	Y_0
	min.	≈			≈				min.	max.	max.							
500	5	656,5	12,5	23,5	10	37	Tr550×6	175	548	692	4	$G^1/_4$	10	15	0,18	3,85	5,73	3,76
	6	708	12,5	23,5	12	45	Tr560×6	230	553	757	5	$G^1/_4$	10	15	0,22	3,1	4,62	3,03
	7,5	760,5	12,5	23,5	12	53	Tr560×6	325	562	838	6	$G^1/_4$	10	15	0,3	2,25	3,34	2,2
	7,5	742,9	12,5	23,5	25	40	Tr550×6	375	562	838	6	$G^1/_4$	10	15	0,37	1,83	2,72	1,79
	9,5	826,4	12,5	23,5	12	57	Tr580×6	412	570	940	8	$G^1/_4$	10	15	0,37	1,84	2,74	1,8
530	5	693,4	12,5	23,5	10	37	Tr580×6	180	578	732	4	$G^1/_4$	12	15	0,17	3,95	5,88	3,86
	6	745	12,5	23,5	12	45	Tr590×6	240	583	797	5	$G^1/_4$	12	15	0,22	3,1	4,62	3,03
	7,5	806,6	12,5	23,5	12	55	Tr590×6	335	592	888	6	$G^1/_4$	12	15	0,29	2,32	3,45	2,26
	7,5	791,5	12,5	23,5	28	45	Tr580×6	400	592	888	6	$G^1/_4$	12	15	0,37	1,83	2,72	1,79
	9,5	872,6	12,5	23,5	12	57	Tr610×6	422	600	990	8	$G^1/_4$	12	15	0,36	1,89	2,81	1,84
570	5	740,5	12,5	23,5	10	38	Tr625×6	192	618	782	4	$G^1/_4$	12	15	0,17	3,95	5,88	3,86
	6	793,3	12,5	23,5	14	45	Tr630×6	245	623	847	5	$G^1/_4$	12	15	0,21	3,24	4,82	3,16
	7,5	791,5	12,5	23,5	30	50	Tr625×6	425	592	888	6	$G^1/_4$	12	15	0,37	1,84	2,74	1,8
	7,5	859,35	12,5	23,5	14	55	Tr630×6	355	632	948	6	$G^1/_4$	12	15	0,29	2,3	3,42	2,25
	9,5	924	12,5	23,5	14	57	Tr650×6	445	640	1 050	8	$G^1/_4$	12	15	0,36	1,9	2,83	1,86
600	6	784,5	12,5	23,5	12	40	Tr655×6	210	653	827	5	$G^1/_4$	12	15	0,18	3,8	5,66	3,72
	7,5	838,2	12,5	23,5	14	46	Tr670×6	258	658	892	6	$G^1/_4$	12	15	0,21	3,24	4,82	3,16
	7,5	821,5	12,5	23,5	30	45	Tr655×6	335	658	892	6	$G^1/_4$	12	15	0,28	2,39	3,56	2,34
	7,5	902,1	12,5	23,5	14	60	Tr670×6	375	662	998	6	$G^1/_4$	12	15	0,29	2,3	3,42	2,25
	7,5	876,2	12,5	23,5	30	50	Tr655×6	450	662	998	6	$G^1/_4$	12	15	0,37	1,82	2,7	1,78
	12	973,4	12,5	23,5	14	63	Tr680×6	475	678	1 102	10	$G^1/_4$	12	15	0,36	1,87	2,79	1,83
630	6	831,5	12,5	23,5	12	41	Tr695×6	216	693	877	5	$G^1/_4$	12	15	0,17	3,95	5,88	3,86
	7,5	888,7	12,5	23,5	14	50	Tr710×7	280	698	952	6	$G^1/_4$	12	15	0,22	3,14	4,67	3,07
	7,5	878,2	12,5	23,5	30	50	Tr695×6	358	698	952	6	$G^1/_4$	12	15	0,28	2,39	3,56	2,34
	7,5	954,85	12,5	23,5	14	60	Tr710×7	395	702	1 058	6	$G^1/_4$	12	15	0,29	2,3	3,42	2,25
	7,5	937	12,5	23,5	30	55	Tr695×6	467	702	1 058	6	$G^1/_4$	12	15	0,36	1,87	2,79	1,83
	12	1 032,6	12,5	23,5	14	63	Tr720×7	500	718	1 172	12	$G^1/_4$	12	15	0,36	1,87	2,79	1,83

Spherical roller bearings

With withdrawal sleeve

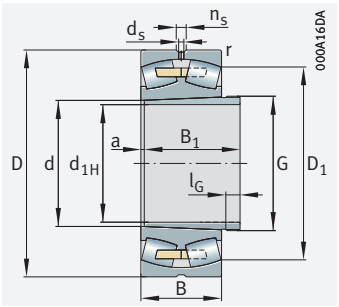

With solid cage, brass or steel

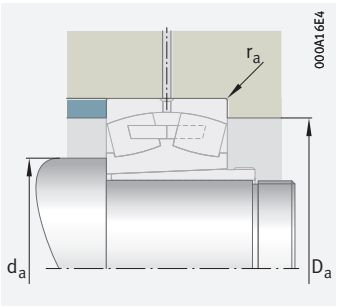

Mounting dimensions

d_{1H} = 670 – 1 060 mm

Main dimensions				Basic load ratings		C_{ur}	n_G	$n_{\vartheta r}$	Mass m		Designation ➤695|1.12 ➤696|1.13 X-life ➤684	
d_{1H}	d	D	B	dyn. C_r	stat. C_{0r}				Bearing	AH	Bearing	Withdrawal sleeve AH
				kN	kN	kN	min^{-1}	min^{-1}	≈ kg	≈ kg		
670	710	950	180	4 800	12 100	740	670	350	336	101	**239/710-K-MB**	**AH39/710-H**
	710	1 030	236	9 000	17 300	1 390	580	320	658	135	**230/710-BEA-XL-K-MB1**	**AH30/710A-H**
	710	1 030	315	11 000	22 500	1 660	485	225	866	151	**240/710-BEA-XL-K30-MB1**	**AH240/710-H**
	710	1 150	438	15 600	35 500	2 340	395	116	1 791	209	**241/710-B-K30-MB**	**AH241/710-H**
	710	1 150	345	14 400	25 500	1 550	470	216	1 383	202	**231/710-BEA-XL-K-MB1**	**AH31/710A-H**
	710	1 280	450	20 500	35 000	2 020	410	151	2 474	278	**232/710-BEA-XL-K-MB1**	**AH32/710A-H**
710	750	1 000	185	5 200	13 000	810	640	325	394	110	**239/750-K-MB**	**AH39/750-H**
	750	1 090	250	10 100	19 300	1 540	550	300	797,4	155	**230/750-BEA-XL-K-MB1**	**AH30/750A-H**
	750	1 090	355	12 300	25 500	1 860	450	207	1 053	169	**240/750-BEA-XL-K30-MB1**	**AH240/750-H**
	750	1 220	365	16 000	28 500	1 720	440	198	1 640	232	**231/750-BEA-XL-K-MB1**	**AH31/750A-H**
	750	1 360	475	22 800	39 500	2 240	380	137	2 969	312	**232/750-BEA-XL-K-MB1**	**AH32/750A-H**
750	800	1 060	195	5 900	15 100	1 030	580	295	490	146	**239/800-B-K-MB**	**AH39/800-H**
	800	1 150	258	10 900	21 200	1 680	520	275	865,4	198	**230/800-BEA-XL-K-MB1**	**AH30/800A-H**
	800	1 150	345	13 300	28 000	1 980	420	189	1 168	221	**240/800-BEA-XL-K30-MB1**	**AH240/800-H**
	800	1 280	375	17 100	31 500	1 850	415	181	1 861	297	**231/800-BEA-XL-K-MB1**	**AH31/800A-H**
	800	1 420	488	24 400	43 500	2 420	355	125	3 339	396	**232/800-BEA-XL-K-MB1**	**AH32/800A-H**
800	850	1 120	200	6 300	16 400	980	550	275	554	165	**239/850-K-MB**	**AH39/850-H**
	850	1 220	272	11 900	24 000	1 840	475	255	1 038	224	**230/850-BEA-XL-K-MB1**	**AH30/850A-H**
	850	1 220	365	14 800	31 500	2 210	390	173	1 375	250	**240/850-BEA-XL-K30-MB1**	**AH240/850-H**
	850	1 360	400	19 200	36 000	2 060	385	164	2 241	336	**231/850-BEA-XL-K-MB1**	**AH31/850A-H**
	850	1 500	515	27 000	48 500	2 650	335	115	3 905	450	**232/850-BEA-XL-K-MB1**	**AH32/850A-H**
850	900	1 180	206	6 500	17 200	1 030	520	260	641	180	**239/900-K-MB**	**AH39/900-H**
	900	1 280	280	12 800	25 500	1 990	340	239	1 163	246	**230/900-BEA-XL-K-MB1**	**AH30/900A-H**
	900	1 280	375	13 500	34 500	2 430	370	160	1 560	274	**240/900-BEA-XL-K30-MB1**	**AH240/900-H**
	900	1 420	412	20 700	38 500	2 230	365	155	2 456	368	**231/900-BEA-XL-K-MB1**	**AH31/900A-H**
	900	1 580	515	28 500	52 000	2 900	320	105	4 336	476	**232/900-BEA-XL-K-MB1**	**AH32/900A-H**
900	950	1 360	300	14 400	29 000	2 160	420	220	1 425	277	**230/950-BEA-XL-K-MB1**	**AH30/950A-H**
	950	1 360	412	18 400	40 000	2 650	340	147	1 966	316	**240/950-BEA-XL-K30-MB1**	**AH240/950-H**
950	1 000	1 420	412	19 100	42 000	2 850	325	137	2 115	339	**240/1000-BEA-XL-K30-MB1**	**AH240/1000-H**
1 000	1 060	1 500	438	21 400	47 500	3 150	305	126	2 470	445	**240/1060-BEA-XL-K30-MB1**	**AH240/1060-H**
1 060	1 120	1 580	462	21 800	58 000	3 500	285	116	2 884	501	**240/1120-BEA-XL-K30-MB1**	**AH240/1120-H**

medias *https://www.schaeffler.de/std/1F9A*

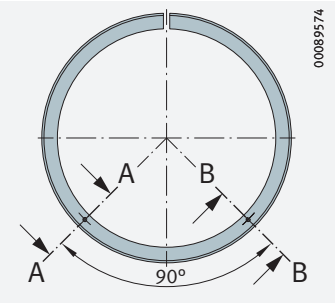

Pump connectors for hydraulic withdrawal sleeve

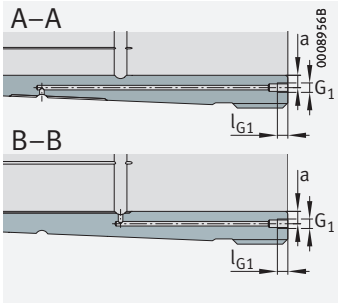

Hydraulic withdrawal sleeve (..-H) Mounting dimensions

Dimensions									Mounting dimensions						Calculation factors			
d_{1H}	r min.	D_1 ≈	d_s	n_s	a ≈	l_G	Thread G	B_1	d_a min.	D_a max.	r_a max.	G_1	a	l_{G1}	e	Y_1	Y_2	Y_0
670	6	877,5	12,5	23,5	12	43	Tr740×7	228	733	927	5	$G^1/_4$	15	15	0,18	3,85	5,73	3,76
	7,5	939,6	12,5	23,5	16	50	Tr750×7	286	738	1 002	6	$G^1/_4$	15	15	0,21	3,24	4,82	3,16
	7,5	925	12,5	23,5	33	50	Tr740×7	365	738	1 002	6	$G^1/_4$	15	15	0,28	2,43	3,61	2,37
	9,5	980,2	12,5	23,5	33	55	Tr740×7	493	750	1 110	8	$G^1/_4$	15	15	0,38	1,79	2,67	1,75
	9,5	1 010,8	12,5	23,5	16	60	Tr750×7	405	750	1 110	8	$G^1/_4$	15	15	0,29	2,35	3,5	2,3
	12	1 089	12,5	23,5	16	65	Tr760×7	515	758	1 232	10	$G^1/_4$	15	15	0,35	1,92	2,86	1,88
710	6	923,2	12,5	23,5	12	44	Tr780×7	234	773	977	5	$G^1/_4$	15	15	0,17	3,95	5,88	3,86
	7,5	992,8	12,5	23,5	16	50	Tr800×7	300	778	1 062	6	$G^1/_4$	15	15	0,21	3,24	4,82	3,16
	7,5	977,5	12,5	23,5	35	50	Tr780×7	385	778	1 062	6	$G^1/_4$	15	15	0,28	2,41	3,59	2,35
	9,5	1 070,8	12,5	23,5	16	60	Tr800×7	425	790	1 180	8	$G^1/_4$	15	15	0,28	2,37	3,53	2,32
	15	1 157,6	12,5	23,5	16	65	Tr800×7	540	808	1 302	12	$G^1/_4$	15	15	0,35	1,94	2,88	1,89
750	6	983,7	12,5	23,5	12	45	Tr830×7	245	823	1 037	5	$G^1/_4$	15	15	0,17	4,05	6,04	3,96
	7,5	1 050,4	12,5	23,5	18	50	Tr850×7	308	828	1 122	6	$G^1/_4$	15	15	0,2	3,31	4,92	3,23
	7,5	1 035,7	12,5	23,5	40	50	Tr830×7	395	828	1 122	6	$G^1/_4$	15	15	0,27	2,49	3,71	2,43
	9,5	1 129,5	12,5	23,5	18	63	Tr850×7	438	840	1 240	8	$G^1/_4$	15	15	0,28	2,43	3,61	2,37
	15	1 215,3	12,5	23,5	18	67	Tr850×7	555	858	1 362	12	$G^1/_4$	15	15	0,34	1,99	2,96	1,94
800	6	1 039,9	12,5	23,5	12	50	Tr880×7	258	873	1 097	5	$G^1/_4$	15	15	0,16	4,11	6,12	4,02
	7,5	1 115,1	12,5	23,5	18	53	Tr900×7	325	878	1 192	6	$G^1/_4$	15	15	0,2	3,34	4,98	3,27
	7,5	1 099,4	12,5	23,5	40	53	Tr880×7	418	878	1 192	6	$G^1/_4$	15	15	0,27	2,51	3,74	2,45
	12	1 199,1	12,5	23,5	18	63	Tr900×7	462	898	1 312	10	$G^1/_4$	15	15	0,28	2,43	3,61	2,37
	15	1 285,3	12,5	23,5	18	70	Tr900×7	585	908	1 442	12	$G^1/_4$	15	15	0,34	1,99	2,96	1,94
850	6	1 098,8	12,5	23,5	12	51	Tr930×8	265	923	1 157	5	$G^1/_4$	15	15	0,16	4,28	6,37	4,19
	7,5	1 174,3	12,5	23,5	20	55	Tr950×8	335	928	1 252	6	$G^1/_4$	15	15	0,2	3,42	5,09	3,34
	7,5	1 157,4	12,5	23,5	45	55	Tr930×8	430	928	1 252	6	$G^1/_4$	15	15	0,26	2,57	3,83	2,52
	12	1 256,2	12,5	23,5	20	63	Tr950×8	475	948	1 372	10	$G^1/_4$	15	15	0,27	2,47	3,67	2,41
	15	1 365,5	12,5	23,5	20	70	Tr950×8	585	958	1 522	12	$G^1/_4$	15	15	0,32	2,12	3,15	2,07
900	7,5	1 245,7	12,5	23,5	20	55	Tr1000×8	355	978	1 332	6	$G^1/_4$	15	15	0,2	3,38	5,03	3,31
	7,5	1 220,4	12,5	23,5	45	55	Tr980×8	467	978	1 332	6	$G^1/_4$	15	15	0,27	2,47	3,67	2,41
950	7,5	1 282,2	12,5	23,5	50	57	Tr1035×8	469	1 028	1 392	6	$G^1/_4$	15	15	0,26	2,6	3,87	2,54
1 000	9,5	1 354	12,5	23,5	50	60	Tr1095×8	498	1 094	1 466	8	$G^1/_4$	15	15	0,26	2,57	3,83	2,52
1 060	9,5	1 429,7	12,5	23,5	50	65	Tr1155×8	527	1 154	1 546	8	$G^1/_4$	15	15	0,26	2,57	3,83	2,52

Spherical roller bearings

For vibratory machinery
Cylindrical or tapered bore

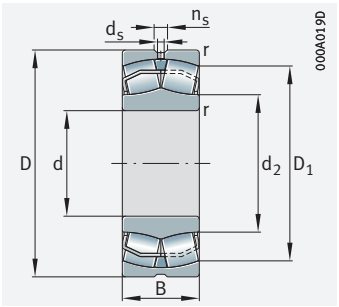

Cylindrical bore

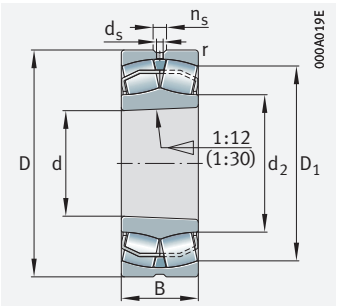

Tapered bore

d = 40 – 110 mm

Main dimensions			Basic load ratings		Fatigue limit load	Limiting speed	Speed rating	Mass	Designation
d	D	B	dyn. C_r	stat. C_{0r}	C_{ur}	n_G	$n_{\vartheta r}$	m	➤*695*|*1.12* ➤*696*|*1.13* X-life ➤*684*
			kN	kN	N	min^{-1}	min^{-1}	≈ kg	
40	90	33	156	149	13 500	7 600	5 500	1,05	**22308-E1-XL-T41A**
	90	33	156	149	13 500	7 600	5 500	1	**22308-E1-XL-K-T41A**
45	100	36	187	183	16 500	6 800	5 000	1,39	**22309-E1-XL-T41A**
	100	36	187	183	16 500	6 800	5 000	1,4	**22309-E1-XL-K-T41A**
50	110	40	229	223	20 700	6 300	4 800	1,9	**22310-E1-XL-T41A**
	110	40	229	223	20 700	6 300	4 800	1,9	**22310-E1-XL-K-T41A**
55	120	43	265	260	24 600	5 800	4 500	2,27	**22311-E1-XL-T41A**
	120	43	265	260	24 600	5 800	4 500	2,2	**22311-E1-XL-K-T41A**
60	130	46	310	310	29 000	5 400	4 200	2,97	**22312-E1-XL-T41A**
	130	46	310	310	29 000	5 400	4 200	2,8	**22312-E1-XL-K-T41A**
65	140	48	350	365	33 500	5 000	3 800	3,57	**22313-E1-XL-T41A**
	140	48	350	365	33 500	5 000	3 800	3,5	**22313-E1-XL-K-T41A**
70	150	51	390	390	37 500	4 800	3 700	4,21	**22314-E1-XL-T41A**
	150	51	390	390	37 500	4 800	3 700	4,1	**22314-E1-XL-K-T41A**
75	160	55	445	450	41 500	4 500	3 550	5,38	**22315-E1-XL-T41A**
	160	55	445	450	42 000	4 500	3 550	5,3	**22315-E1-XL-K-T41A**
80	170	58	495	510	46 500	4 250	3 400	6,27	**22316-E1-XL-T41A**
	170	58	495	510	46 500	4 250	3 400	6,1	**22316-E1-XL-K-T41A**
85	180	60	540	560	51 000	4 100	3 200	7,06	**22317-E1-XL-T41D**
	180	60	540	560	51 000	4 100	3 200	7,1	**22317-E1-XL-K-T41A**
90	190	64	610	630	56 000	3 850	3 000	8,69	**22318-E1-XL-T41D**
	190	64	610	630	56 000	3 850	3 000	8,5	**22318-E1-XL-K-T41A**
95	200	67	670	700	61 000	3 700	2 800	9,69	**22319-E1-XL-T41D**
	200	67	670	700	61 000	3 700	2 800	9,5	**22319-E1-XL-K-T41A**
100	215	82,6	680	900	69 000	2 800	–	15,5	**23320-AS-MA-T41A**
	215	73	810	920	77 000	3 300	2 380	13,1	**22320-E1-XL-T41D**
	215	73	810	920	77 000	3 300	2 380	13	**22320-E1-XL-K-T41A**
110	240	80	950	1 070	93 000	3 000	2 130	17,7	**22322-E1-XL-T41D**
	240	80	950	1 070	93 000	3 000	2 130	17,4	**22322-E1-XL-K-T41A**

medias *https://www.schaeffler.de/std/1F9A*

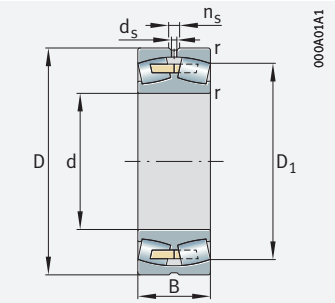

Solid cage, brass or steel; cylindrical bore

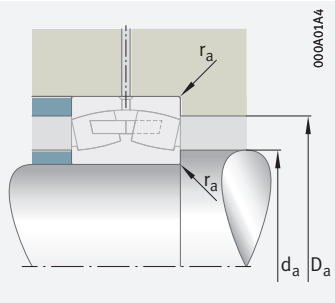

Mounting dimensions

Dimensions						Mounting dimensions			Calculation factors			
d	r min.	D_1 ≈	d_2 ≈	d_s	n_s	d_a min.	D_a max.	r_a max.	e	Y_1	Y_2	Y_0
40	1,5	76	52,4	3,2	6,5	49	81	1,5	0,36	1,86	2,77	1,82
	1,5	76	52,4	3,2	6,5	49	81	1,5	0,36	1,86	2,77	1,82
45	1,5	84,7	58,9	3,2	6,5	54	91	1,5	0,36	1,9	2,83	1,86
	1,5	84,7	58,9	3,2	6,5	54	91	1,5	0,36	1,9	2,83	1,86
50	2	92,6	63	3,2	6,5	61	99	2	0,36	1,86	2,77	1,82
	2	92,6	63	3,2	6,5	61	99	2	0,36	1,86	2,77	1,82
55	2	101,4	68,9	3,2	6,5	66	109	2	0,36	1,89	2,81	1,84
	2	101,4	68,9	3,2	6,5	66	109	2	0,36	1,89	2,81	1,84
60	2,1	110,1	74,8	3,2	6,5	72	118	2,1	0,35	1,91	2,85	1,87
	2,1	110,1	74,8	3,2	6,5	72	118	2,1	0,35	1,91	2,85	1,87
65	2,1	119,3	83,2	4,8	9,5	77	128	2,1	0,34	2	2,98	1,96
	2,1	119,3	83,2	4,8	9,5	77	128	2,1	0,34	2	2,98	1,96
70	2,1	128	86,7	4,8	9,5	82	138	2,1	0,34	2	2,98	1,96
	2,1	128	86,7	4,8	9,5	82	138	2,1	0,34	2	2,98	1,96
75	2,1	136,3	92,4	4,8	9,5	87	148	2,1	0,34	1,99	2,96	1,94
	2,1	136,3	92,4	4,8	9,5	87	148	2,1	0,34	1,99	2,96	1,94
80	2,1	145,1	98,3	4,8	9,5	92	158	2,1	0,34	1,99	2,96	1,94
	2,1	145,1	98,3	4,8	9,5	92	158	2,1	0,34	1,99	2,96	1,94
85	3	154,2	104,4	4,8	9,5	99	166	2,5	0,33	2,04	3,04	2
	3	154,2	104,4	4,8	9,5	99	166	2,5	0,33	2,04	3,04	2
90	3	162,5	110,2	6,3	12,2	104	176	2,5	0,33	2,03	3,02	1,98
	3	162,5	110,2	6,3	12,2	104	176	2,5	0,33	2,03	3,02	1,98
95	3	171,2	116	6,3	12,2	109	186	2,5	0,33	2,03	3,02	1,98
	3	171,2	116	6,3	12,2	109	186	2,5	0,33	2,03	3,02	1,98
100	3	–	–	4,8	9,5	114	201	2,5	0,43	1,57	2,34	1,53
	3	184,7	130,2	6,3	12,2	114	201	2,5	0,33	2,03	3,02	1,98
	3	184,7	130,2	6,3	12,2	114	201	2,5	0,33	2,03	3,02	1,98
110	3	204,9	143,1	8	15	124	226	2,5	0,33	2,07	3,09	2,03
	3	204,9	143,1	8	15	124	226	2,5	0,33	2,07	3,09	2,03

Spherical roller bearings

For vibratory machinery
Cylindrical or tapered bore

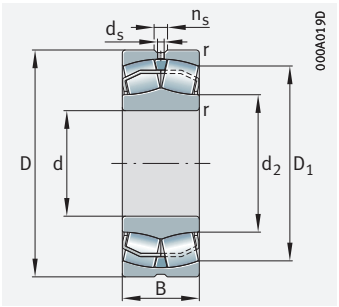

Cylindrical bore

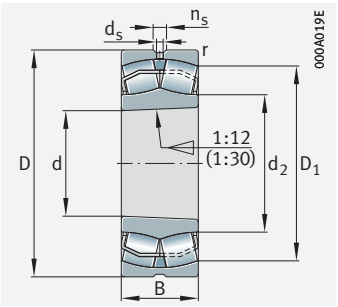

Tapered bore

d = 120 – 220 mm

Main dimensions			Basic load ratings		Fatigue limit load	Limiting speed	Speed rating	Mass	Designation
d	D	B	dyn. C_r	stat. C_{0r}	C_{ur}	n_G	$n_{\vartheta r}$	m	➤*695|1.12* ➤*696|1.13* X-life ➤*684*
			kN	kN	N	min^{-1}	min^{-1}	≈ kg	
120	260	86	1 080	1 170	105 000	2 850	2 000	22,3	**22324-E1-XL-T41D**
	260	86	1 080	1 170	105 000	2 850	2 000	22,1	**22324-E1-XL-K-T41A**
130	280	93	1 250	1 370	120 000	2 650	1 820	28	**22326-E1-XL-T41D**
	280	93	1 250	1 370	120 000	2 650	1 820	27,4	**22326-E1-XL-K-T41A**
140	300	102	1 460	1 630	135 000	2 420	1 660	34,6	**22328-E1-XL-T41D**
	300	102	1 460	1 630	135 000	2 420	1 660	34,4	**22328-E1-XL-K-T41A**
150	320	108	1 640	1 850	151 000	2 290	1 520	42,2	**22330-E1-XL-T41D**
	320	108	1 640	1 850	151 000	2 290	1 520	40,9	**22330-E1-XL-K-T41A**
160	340	114	1 680	1 990	162 000	2 250	1 420	47,3	**22332-BE-XL-K-JPA-T41A**
	340	136	2 000	2 370	186 000	2 010	–	60,4	**23332-BEA-XL-MA1-T41A**
	340	114	1 680	1 990	162 000	2 250	1 420	48,4	**22332-BE-XL-JPA-T41A**
170	360	120	1 870	2 220	178 000	2 130	1 320	56,9	**22334-BE-XL-K-JPA-T41A**
	360	140	2 190	2 700	207 000	1 890	–	69	**23334-BEA-XL-MA1-T41A**
	360	120	1 870	2 220	178 000	2 130	1 320	58,2	**22334-BE-XL-JPA-T41A**
180	380	126	2 060	2 460	195 000	2 030	1 230	66,6	**22336-BE-XL-K-JPA-T41A**
	380	150	2 460	3 100	227 000	1 780	–	81	**23336-BEA-XL-MA1-T41A**
	380	126	2 060	2 460	195 000	2 030	1 230	68,1	**22336-BE-XL-JPA-T41A**
190	400	132	2 220	2 650	213 000	1 940	1 160	77,2	**22338-BE-XL-K-JPA-T41A**
	400	155	2 650	3 350	248 000	1 710	–	93,5	**23338-BEA-XL-MA1-T41A**
	400	132	2 220	2 650	213 000	1 940	1 160	78,9	**22338-BE-XL-JPA-T41A**
200	420	138	2 440	2 950	232 000	1 830	1 080	87,4	**22340-BE-XL-K-JPA-T41A**
	420	165	2 950	3 700	270 000	1 600	–	112,6	**23340-BEA-XL-MA1-T41A**
	420	138	2 440	2 950	232 000	1 830	1 080	89,4	**22340-BE-XL-JPA-T41A**
220	460	145	2 800	3 400	270 000	1 690	950	114	**22344-BE-XL-K-JPA-T41A**
	460	180	3 450	4 450	315 000	1 430	–	147,1	**23344-BEA-XL-MA1-T41A**
	460	145	2 800	3 400	270 000	1 690	950	117	**22344-BE-XL-JPA-T41A**

medias *https://www.schaeffler.de/std/1F9A*

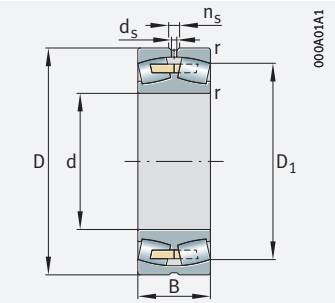

Solid cage, brass or steel; cylindrical bore

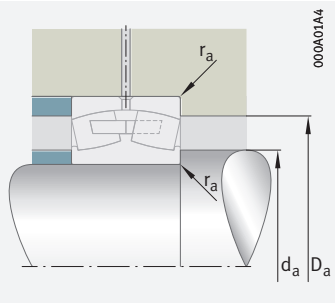

Mounting dimensions

Dimensions						Mounting dimensions			Calculation factors			
d	r min.	D_1 ≈	d_2 ≈	d_s	n_s	d_a min.	D_a max.	r_a max.	e	Y_1	Y_2	Y_0
120	3	222,4	150,8	8	15	134	246	2,5	0,33	2,06	3,06	2,01
	3	222,4	150,7	8	15	134	246	2,5	0,33	2,06	3,06	2,01
130	4	239,5	162,2	9,5	17,7	147	263	3	0,33	2,06	3,06	2,01
	4	239,5	162,2	9,5	17,7	147	263	3	0,33	2,06	3,06	2,01
140	4	255,7	173,5	9,5	17,7	157	283	3	0,34	2	2,98	1,96
	4	255,7	173,5	9,5	17,7	157	283	3	0,34	2	2,98	1,96
150	4	273,2	185,3	9,5	17,7	167	303	3	0,33	2,02	3	1,97
	4	273,2	185,3	9,5	17,7	167	303	3	0,33	2,02	3	1,97
160	4	286,7	201,2	9,5	17,7	177	323	3	0,35	1,94	2,88	1,89
	4	280,8	–	9,5	17,7	192	323	3	0,42	1,6	2,38	1,56
	4	286,7	201,2	9,5	17,7	177	323	3	0,35	1,94	2,88	1,89
170	4	303,9	213,1	9,5	17,7	187	343	3	0,35	1,95	2,9	1,91
	4	299,4	–	9,5	17,7	210	343	3	0,4	1,67	2,49	1,63
	4	303,9	213,1	9,5	17,7	187	343	3	0,35	1,95	2,9	1,91
180	4	320,8	224,9	12,5	23,5	197	363	3	0,34	1,96	2,92	1,92
	4	315	–	9,5	17,7	197	363	3	0,41	1,64	2,44	1,6
	4	320,8	224,9	12,5	23,5	197	363	3	0,34	1,96	2,92	1,92
190	5	338,1	236,8	12,5	23,5	210	380	4	0,34	1,96	2,92	1,92
	5	333,1	–	9,5	17,7	210	380	4	0,4	1,67	2,49	1,63
	5	338,1	236,8	12,5	23,5	210	380	4	0,34	1,96	2,92	1,92
200	5	355,1	248,8	12,5	23,5	220	400	4	0,34	1,98	2,94	1,93
	5	348,6	–	9,5	17,7	220	400	4	0,41	1,64	2,44	1,6
	5	355,1	248,8	12,5	23,5	220	400	4	0,34	1,98	2,94	1,93
220	5	391,1	273,4	12,5	23,5	240	440	4	0,33	2,06	3,06	2,01
	5	382,4	–	9,5	17,7	240	440	4	0,41	1,65	2,46	1,61
	5	391,1	273,4	12,5	23,5	240	440	4	0,33	2,06	3,06	2,01

Spherical roller bearings

For vibratory machinery
With adapter sleeve

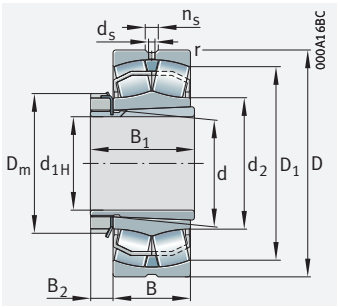

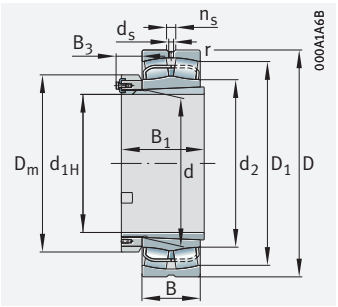

With locknut and retaining bracket

d_{1H} = 35 – 200 mm

Main dimensions				Basic load ratings		Fatigue limit load	Limiting speed	Speed rating	Mass m		Designation ➤695|1.12 ➤696|1.13 X-life ➤684	
d_{1H}	d	D	B	dyn. C_r kN	stat. C_{0r} kN	C_{ur} N	n_G min^{-1}	$n_{\vartheta r}$ min^{-1}	Bearing ≈ kg	Adapter sleeve ≈ kg	Bearing	Adapter sleeve
35	40	90	33	156	149	13 500	7 600	5 500	1	0,23	**22308-E1-XL-K-T41A**	**H2308**
40	45	100	36	187	183	16 500	6 800	5 000	1,4	0,298	**22309-E1-XL-K-T41A**	**H2309**
45	50	110	40	229	223	20 700	6 300	4 800	1,9	0,36	**22310-E1-XL-K-T41A**	**H2310**
50	55	120	43	265	260	24 600	5 800	4 500	2,2	0,435	**22311-E1-XL-K-T41A**	**H2311**
55	60	130	46	310	310	29 000	5 400	4 200	2,8	0,493	**22312-E1-XL-K-T41A**	**H2312**
60	65	140	48	350	365	33 500	5 000	3 800	3,5	0,57	**22313-E1-XL-K-T41A**	**H2313**
	70	150	51	390	390	37 500	4 800	3 700	4,1	0,92	**22314-E1-XL-K-T41A**	**H2314**
65	75	160	55	445	450	42 000	4 500	3 550	5,3	1,06	**22315-E1-XL-K-T41A**	**H2315**
70	80	170	58	495	510	46 500	4 250	3 400	6,1	1,31	**22316-E1-XL-K-T41A**	**H2316**
75	85	180	60	540	560	51 000	4 100	3 200	7,1	1,47	**22317-E1-XL-K-T41A**	**H2317**
80	90	190	64	610	630	56 000	3 850	3 000	8,5	1,71	**22318-E1-XL-K-T41A**	**H2318**
85	95	200	67	670	700	61 000	3 700	2 800	9,5	1,95	**22319-E1-XL-K-T41A**	**H2319**
90	100	215	73	810	920	77 000	3 300	2 380	13	2,2	**22320-E1-XL-K-T41A**	**H2320**
100	110	240	80	950	1 070	93 000	3 000	2 130	17,4	2,78	**22322-E1-XL-K-T41A**	**H2322**
110	120	260	86	1 080	1 170	105 000	2 850	2 000	22,1	3,24	**22324-E1-XL-K-T41A**	**H2324**
115	130	280	93	1 250	1 370	120 000	2 650	1 820	27,4	4,69	**22326-E1-XL-K-T41A**	**H2326**
125	140	300	102	1 460	1 630	135 000	2 420	1 660	34,4	5,66	**22328-E1-XL-K-T41A**	**H2328**
135	150	320	108	1 640	1 850	151 000	2 290	1 520	40,9	6,76	**22330-E1-XL-K-T41A**	**H2330**
140	160	340	114	1 680	1 990	162 000	2 250	1 420	47,3	9,32	**22332-BE-XL-K-JPA-T41A**	**H2332**
150	170	360	120	1 870	2 220	178 000	2 130	1 320	56,9	10,4	**22334-BE-XL-K-JPA-T41A**	**H2334**
160	180	380	126	2 060	2 460	195 000	2 030	1 230	66,6	11,6	**22336-BE-XL-K-JPA-T41A**	**H2336**
170	190	400	132	2 220	2 650	213 000	1 940	1 160	77,2	12,9	**22338-BE-XL-K-JPA-T41A**	**H2338**
180	200	420	138	2 440	2 950	232 000	1 830	1 080	87,4	14,2	**22340-BE-XL-K-JPA-T41A**	**H2340**
200	220	460	145	2 800	3 400	270 000	1 690	950	114	17,8	**22344-BE-XL-K-JPA-T41A**	**H2344X**

medias *https://www.schaeffler.de/std/1F9A*

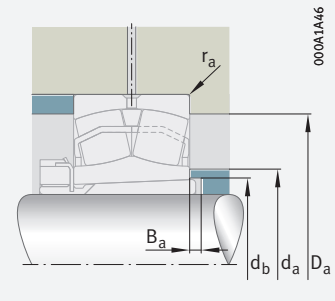

Mounting dimensions

Dimensions									Mounting dimensions					Calculation factors			
d_{1H}	r	D_1	d_2	d_s	n_s	D_m	B_1	B_2	d_a	D_a	d_b	B_a	r_a	e	Y_1	Y_2	Y_0
	min.	≈	≈					≈	max.	max.	min.	min.	max.				
35	1,5	76	52,4	3,2	6,5	58	46	10,25	49	81	45	5	1,5	0,36	1,86	2,77	1,82
40	1,5	84,7	58,9	3,2	6,5	65	50	11,25	54	91	50	5	1,5	0,36	1,9	2,83	1,86
45	2	92,6	63	3,2	6,5	70	55	12,25	61	99	56	5	2	0,36	1,86	2,77	1,82
50	2	101,4	68,9	3,2	6,5	75	59	12,5	66	109	61	6	2	0,36	1,89	2,81	1,84
55	2,1	110,1	74,8	3,2	6,5	80	62	12,5	72	118	66	5	2,1	0,35	1,91	2,85	1,87
60	2,1	119,3	83,2	4,8	9,5	85	65	13,5	77	128	72	5	2,1	0,34	2	2,98	1,96
	2,1	128	86,7	4,8	9,5	92	68	13,5	82	138	77	5	2,1	0,34	2	2,98	1,96
65	2,1	136,3	92,4	4,8	9,5	98	73	14,5	87	148	82	5	2,1	0,34	1,99	2,96	1,94
70	2,1	145,1	98,3	4,8	9,5	105	78	16,75	92	158	88	5	2,1	0,34	1,99	2,96	1,94
75	3	154,2	104,4	4,8	9,5	110	82	17,75	99	166	94	6	2,5	0,33	2,04	3,04	2
80	3	162,5	110,2	6,3	12,2	120	86	17,75	104	176	100	6	2,5	0,33	2,03	3,02	1,98
85	3	171,2	116	6,3	12,2	125	90	18,75	109	186	105	7	2,5	0,33	2,03	3,02	1,98
90	3	184,7	130,2	6,3	12,2	130	97	19,75	114	201	110	7	2,5	0,33	2,03	3,02	1,98
100	3	204,9	143,1	8	15	145	105	20,75	124	226	121	7	2,5	0,33	2,07	3,09	2,03
110	3	222,4	150,7	8	15	155	112	22	134	246	131	7	2,5	0,33	2,06	3,06	2,01
115	4	239,5	162,2	9,5	17,7	165	121	23	147	263	142	8	3	0,33	2,06	3,06	2,01
125	4	255,7	173,5	9,5	17,7	180	131	24	157	283	152	8	3	0,34	2	2,98	1,96
135	4	273,2	185,3	9,5	17,7	195	139	26	167	303	163	8	3	0,33	2,02	3	1,97
140	4	286,7	201,2	9,5	17,7	210	147	27,5	177	323	174	8	3	0,35	1,94	2,88	1,89
150	4	303,9	213,1	9,5	17,7	220	154	28,5	187	343	185	8	3	0,35	1,95	2,9	1,91
160	4	320,8	224,9	12,5	23,5	230	161	29,5	197	363	195	8	3	0,34	1,96	2,92	1,92
170	5	338,1	236,8	12,5	23,5	240	169	30,5	210	380	206	9	4	0,34	1,96	2,92	1,92
180	5	355,1	248,8	12,5	23,5	250	176	31,5	220	400	216	10	4	0,34	1,98	2,94	1,93
200	5	391,1	273,4	12,5	23,5	280	186	35	240	440	236	10	4	0,33	2,06	3,06	2,01

Spherical roller bearings

For vibratory machinery
With withdrawal sleeve

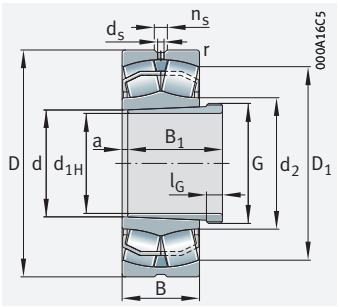

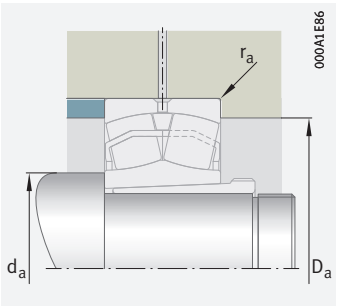

Mounting dimensions

d_{1H} = 35 – 200 mm

Main dimensions				Basic load ratings		Fatigue limit load	Limiting speed	Speed rating	Mass m		Designation ➤695|1.12 ➤696|1.13 X-life ➤684	
d_{1H}	d	D	B	dyn. C_r	stat. C_{0r}	C_{ur}	n_G	$n_{\vartheta r}$	Bearing	Withdrawal sleeve	Bearing	Withdrawal sleeve
				kN	kN	N	min^{-1}	min^{-1}	≈ kg	≈ kg		
35	40	90	33	156	149	13 500	7 600	5 500	1	0,13	**22308-E1-XL-K-T41A**	**AH2308**
40	45	100	36	187	183	16 500	6 800	5 000	1,4	0,17	**22309-E1-XL-K-T41A**	**AH2309**
45	50	110	40	229	223	20 700	6 300	4 800	1,9	0,22	**22310-E1-XL-K-T41A**	**AHX2310**
50	55	120	43	265	260	24 600	5 800	4 500	2,2	0,26	**22311-E1-XL-K-T41A**	**AHX2311**
55	60	130	46	310	310	29 000	5 400	4 200	2,8	0,32	**22312-E1-XL-K-T41A**	**AHX2312**
60	65	140	48	350	365	33 500	5 000	3 800	3,5	0,36	**22313-E1-XL-K-T41A**	**AH2313G**
65	70	150	51	390	390	37 500	4 800	3 700	4,1	0,42	**22314-E1-XL-K-T41A**	**AHX2314G**
70	75	160	55	445	450	42 000	4 500	3 550	5,3	0,48	**22315-E1-XL-K-T41A**	**AHX2315G**
75	80	170	58	495	510	46 500	4 250	3 400	6,1	0,61	**22316-E1-XL-K-T41A**	**AHX2316**
80	85	180	60	540	560	51 000	4 100	3 200	7,1	0,68	**22317-E1-XL-K-T41A**	**AHX2317**
85	90	190	64	610	630	56 000	3 850	3 000	8,5	0,78	**22318-E1-XL-K-T41A**	**AHX2318**
90	95	200	67	670	700	61 000	3 700	2 800	9,5	0,91	**22319-E1-XL-K-T41A**	**AHX2319**
95	100	215	73	810	920	77 000	3 300	2 380	13	1,03	**22320-E1-XL-K-T41A**	**AHX2320**
105	110	240	80	950	1 070	93 000	3 000	2 130	17,4	1,26	**22322-E1-XL-K-T41A**	**AHX2322G**
115	120	260	86	1 080	1 170	105 000	2 850	2 000	22,1	1,5	**22324-E1-XL-K-T41A**	**AHX2324G**
125	130	280	93	1 250	1 370	120 000	2 650	1 820	27,4	1,84	**22326-E1-XL-K-T41A**	**AHX2326G**
135	140	300	102	1 460	1 630	135 000	2 420	1 660	34,4	2,21	**22328-E1-XL-K-T41A**	**AHX2328G**
145	150	320	108	1 640	1 850	151 000	2 290	1 520	40,9	2,64	**22330-E1-XL-K-T41A**	**AHX2330G**
150	160	340	114	1 680	1 990	162 000	2 250	1 420	47,3	4,26	**22332-BE-XL-K-JPA-T41A**	**AH2332G**
160	170	360	120	1 870	2 220	178 000	2 130	1 320	56,9	4,78	**22334-BE-XL-K-JPA-T41A**	**AH2334G**
170	180	380	126	2 060	2 460	195 000	2 030	1 230	66,6	5,42	**22336-BE-XL-K-JPA-T41A**	**AH2336G**
180	190	400	132	2 220	2 650	213 000	1 940	1 160	77,2	6,02	**22338-BE-XL-K-JPA-T41A**	**AH2338G**
190	200	420	138	2 440	2 950	232 000	1 830	1 080	87,4	7,64	**22340-BE-XL-K-JPA-T41A**	**AH2340**
200	220	460	145	2 800	3 400	270 000	1 690	950	114	13,6	**22344-BE-XL-K-JPA-T41A**	**AH2344**

medias *https://www.schaeffler.de/std/1F9A*

Dimensions										Mounting dimensions			Calculation factors			
d_{1H}	r min.	D_1 ≈	d_2 ≈	d_s	n_s	a ≈	B_1	l_G	Thread G	d_a min.	D_a max.	r_a max.	e	Y_1	Y_2	Y_0
35	1,5	76	52,4	3,2	6,5	3	7	40	M45×1,5	49	81	1,5	0,36	1,86	2,77	1,82
40	1,5	84,7	58,9	3,2	6,5	3	7	44	M50×1,5	54	91	1,5	0,36	1,9	2,83	1,86
45	2	92,6	63	3,2	6,5	3	9	50	M55×2	61	99	2	0,36	1,86	2,77	1,82
50	2	101,4	68,9	3,2	6,5	3	10	54	M60×2	66	109	2	0,36	1,89	2,81	1,84
55	2,1	110,1	74,8	3,2	6,5	3	11	58	M65×2	72	118	2,1	0,35	1,91	2,85	1,87
60	2,1	119,3	83,2	4,8	9,5	3	12	61	M70×2	77	128	2,1	0,34	2	2,98	1,96
65	2,1	128	86,7	4,8	9,5	4	12	64	M75×2	82	138	2,1	0,34	2	2,98	1,96
70	2,1	136,3	92,4	4,8	9,5	4	12	68	M80×2	87	148	2,1	0,34	1,99	2,96	1,94
75	2,1	145,1	98,3	4,8	9,5	4	12	71	M90×2	92	158	2,1	0,34	1,99	2,96	1,94
80	3	154,2	104,4	4,8	9,5	4	13	74	M95×2	99	166	2,5	0,33	2,04	3,04	2
85	3	162,5	110,2	6,3	12,2	4	14	79	M100×2	104	176	2,5	0,33	2,03	3,02	1,98
90	3	171,2	116	6,3	12,2	4	16	85	M105×2	109	186	2,5	0,33	2,03	3,02	1,98
95	3	184,7	130,2	6,3	12,2	4	16	90	M110×2	114	201	2,5	0,33	2,03	3,02	1,98
105	3	204,9	143,1	8	15	4	16	98	M120×2	124	226	2,5	0,33	2,07	3,09	2,03
115	3	222,4	150,7	8	15	4	17	105	M130×2	134	246	2,5	0,33	2,06	3,06	2,01
125	4	239,5	162,2	9,5	17,7	4	19	115	M140×2	147	263	3	0,33	2,06	3,06	2,01
135	4	255,7	173,5	9,5	17,7	5	20	125	M150×2	157	283	3	0,34	2	2,98	1,96
145	4	273,2	185,3	9,5	17,7	5	24	135	M160×3	167	303	3	0,33	2,02	3	1,97
150	4	286,7	201,2	9,5	17,7	6	24	140	M170×3	177	323	3	0,35	1,94	2,88	1,89
160	4	303,9	213,1	9,5	17,7	6	24	146	M180×3	187	343	3	0,35	1,95	2,9	1,91
170	4	320,8	224,9	12,5	23,5	6	26	154	M190×3	197	363	3	0,34	1,96	2,92	1,92
180	5	338,1	236,8	12,5	23,5	7	26	160	M200×3	210	380	4	0,34	1,96	2,92	1,92
190	5	355,1	248,8	12,5	23,5	7	30	170	Tr220×4	220	400	4	0,34	1,98	2,94	1,93
200	5	391,1	273,4	12,5	23,5	8	30	181	Tr240×4	240	440	4	0,33	2,06	3,06	2,01

Needle roller and cage assemblies

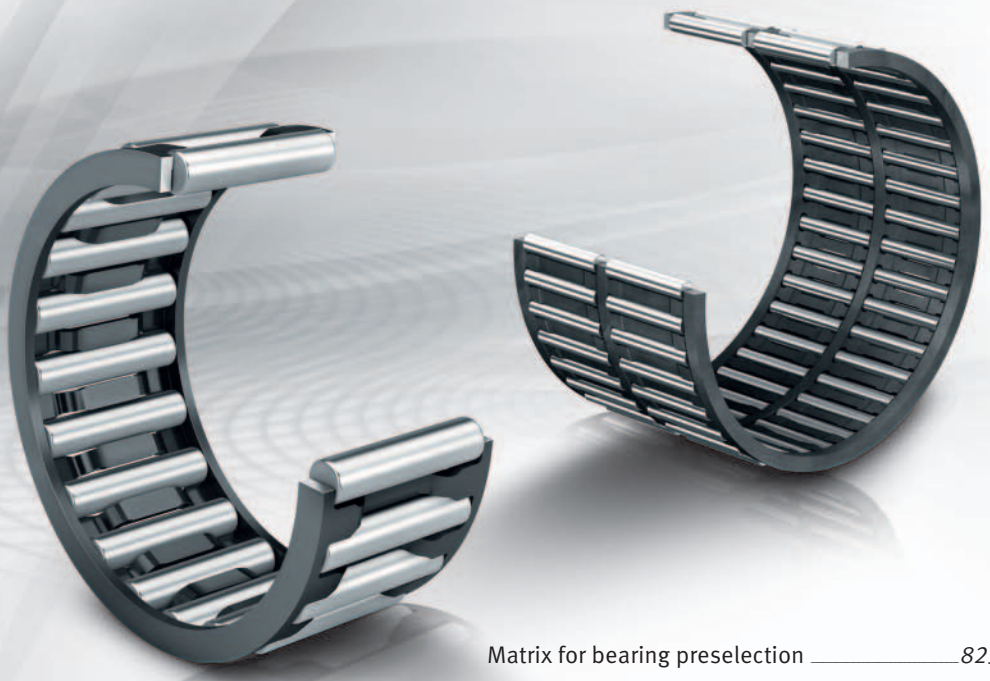

Matrix for bearing preselection 823

1 Needle roller and cage assemblies 824

1.1 Bearing designs 824
1.2 Load carrying capacity 829
1.3 Compensation of angular misalignments 829
1.4 Lubrication 830
1.5 Sealing 830
1.6 Speeds 830

1.7 Noise *830*
1.8 Temperature range *831*
1.9 Cages *831*
1.10 Internal clearance *831*
1.11 Dimensions, tolerances *832*
1.12 Suffixes *832*
1.13 Structure of bearing designation *832*
1.14 Dimensioning *833*
1.15 Minimum load *833*
1.16 Design of bearing arrangements *834*
1.17 Mounting and dismounting *837*
1.18 Legal notice regarding data freshness *837*
1.19 Further information *837*
Product table *838*
Needle roller and cage assemblies *838*

Matrix for bearing preselection

The matrix gives an overview of the types and design features.

It can be used to make a preliminary assessment of whether a bearing is fundamentally suitable for the envisaged application.

The additional information provided in the product chapter (see column "detailed information") and in the Technical principles must, however, be observed in addition to this overview in selection of the bearing.

Design features and suitability			Needle roller and cage assemblies	
+++ extremely suitable ++ highly suitable + suitable (+) suitable with restrictions – not suitable/not applicable ✓ available			single or double row	detailed information ➤ 824
Load carrying capacity	radial		+++	➤ 829|1.2
	axial, one direction		–	➤ 829|1.2
	axial, both directions		–	➤ 829|1.2
	moments		–	➤ 829|1.2
Compensation of angular misalignments	static		–	➤ 829|1.3
	dynamic		–	➤ 829|1.3
Bearing design	cylindrical bore		–	➤ 824|1.1
	tapered bore		–	➤ 824|1.1
	separable		–	➤ 837|1.17
Lubrication	greased		–	➤ 830|1.4
Sealing	open		✓	➤ 830|1.5
	non-contact		–	➤ 830|1.5
	contact		–	➤ 830|1.5
Operating temperature in °C	from to		–30 +140[1]	➤ 831|1.8
Suitability for	high speeds		+++	➤ 830|1.6
	high running accuracy		++	➤ 832|1.11 ➤ 115
	low-noise running		+	➤ 830|1.7 ➤ 27
	high rigidity		++	➤ 54
	reduced friction		+	➤ 56
	length compensation within bearing		–	
	non-locating bearing arrangement		++	➤ 141
	locating bearing arrangement		–	➤ 141
X-life bearings		X-life	–	
Enveloping circle diameter F_w in mm	from to		3 265	➤ 838
Product tables	from page ➤		838	

[1] Data valid for needle roller and cage assemblies with sheet steel cage and with cages made from copper-zinc alloy

1 Needle roller and cage assemblies

Radial needle roller and cage assemblies:
- are suitable for applications with a very small radial design envelope, where the raceways on the shaft and in the housing are designed as rolling bearing raceways (direct bearing arrangement)
- can support high radial loads
- allow high speeds
- combine the load carrying capacity advantages of full complement needle roller bearing arrangements with the speed advantages of a cage bearing
- have a high running accuracy
- result in rigid bearing arrangements
- are easy to mount
- permit technically straightforward, economical and cost-effective designs

For an overview of other product-specific features, see the Matrix for bearing preselection ➤*823*.

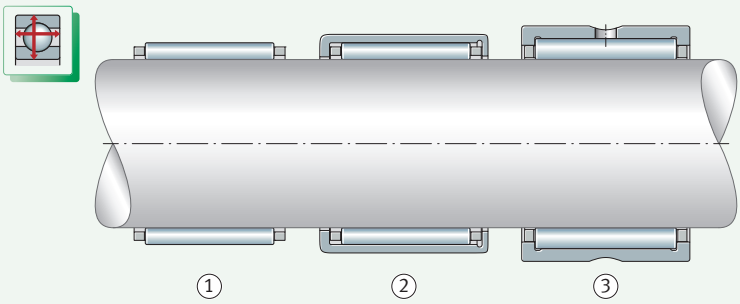

1
Radial needle roller and cage assembly – comparison of radial design envelope with drawn cup needle roller bearing with open ends and machined needle roller bearing

① *Radial needle roller and cage assembly*
② *Drawn cup needle roller bearing with open ends*
③ *Machined needle roller bearing*

1.1 Bearing designs

✎ *Design variants*

Radial needle roller and cage assemblies:
- are available in the basic design (K) ➤*825*|*2* and ➤*826*|*3*
- are available for centrifugal forces and high acceleration forces (KZK, KBK) ➤*827*|*4*
- can be customised from profiled strip (K) ➤*828*|*6*

Needle roller and cage assemblies of basic design

Bearings with a very small radial section height

Needle roller and cage assemblies are part of the group of radial needle roller bearings. These ready-to-fit bearing arrangement elements comprise needle cages, which are fitted with needle rollers ➤*825*|*2* and ➤*826*|*1*. They are rolling bearings with a very small radial section height and, apart from full complement needle roller bearing arrangements, are the simplest design of radial needle roller bearing. However, while the design envelope is completely filled with loose needle rollers in full complement needle roller bearing arrangements and, depending on the position, the rolling elements are therefore in contact with each other, these are guided in the cage pockets in needle roller and cage assemblies. The pockets, which are separated from each other by bars and are uniformly distributed around the circumference of the cage, maintain the spacing of the rolling elements relative to each other. The cage and rolling elements thus create a ready-to-fit unit.

The needle rollers are guided parallel to the axis

In addition, the bars prevent sliding friction between adjacent rolling elements and guide the rolling elements parallel to the bearing axis in the load-free zone. Guidance parallel to the axis prevents skewing of the needle rollers in the load-free zone. Compared with full complement needle roller bearing arrangements, needle roller and cage assemblies are suitable for higher speeds. As a result, the cage compensates for the disadvantages of a full complement needle roller bearing arrangement.

For bearing arrangements with a particularly small radial design envelope

Standard needle roller sorts are used as needle rollers ➤*826*|*1*. Due to the absence of an inner and outer ring, the radial section height of the bearings is only equivalent to the diameter of the needle rollers. As a result, needle roller and cage assemblies are particularly suitable for applications requiring only a very small radial design envelope. The majority of the bearings are of a single row design ➤*825*|*2*. This variant has the prefix K.

Needle roller and cage assemblies are only functional once they have been fitted between the housing and shaft. In this case, the raceways must be designed as rolling bearing raceways ➤*834*|*1.16*.

2
Single row needle roller and cage assembly

F_r = *radial load*

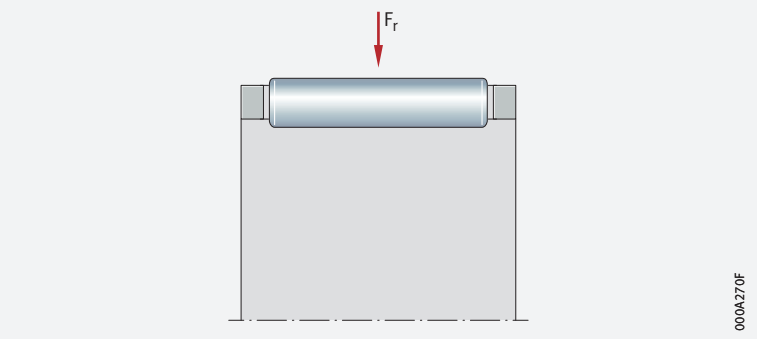

Double row needle roller and cage assemblies

Particularly high radial load carrying capacity

Double row needle roller and cage assemblies have a higher load carrying capacity than single row designs, but are correspondingly wider ➤*826*|*3*. These bearings have the prefix K and the suffix ZW and are only available in particular enveloping circle diameters F_w ➤*832*|*1.12* and ➤*838*|.

3
Double row needle roller and cage assembly

F_r = *radial load*

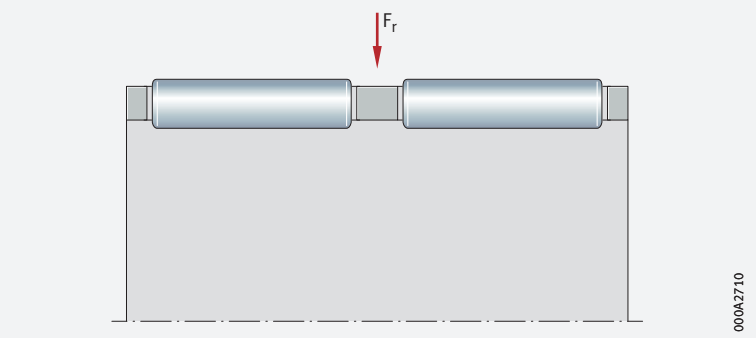

Needle rollers

Standard needle roller sorts are used as needle rollers

Needle roller and cage assemblies are supplied with standard needle roller sorts of grade G2 in accordance with the table ➤*826*| ▦ *1*. In all cases, needle rollers of only one sort are used in any one needle roller and cage assembly. The sort is printed on the packaging and colour coded ➤*826*| ▦ *1*. The sorts are designated by the upper and lower deviations (in µm), the diameter tolerance is a maximum of 2 µm. In each case, two neighbouring needle roller sorts are matched as sort pairs.

1
Dimensional and geometrical accuracy of needle rollers of grade G2

Grade	Deviations and tolerances for diameter D_w [1]							Length tolerance
	Deviation	Variation of needle roller diameter within a single sort	Sort pair colour code	Sorts		Roundness	Roughness	
		V_{DwL}				t_{Dw}	Ra	
	µm	µm		µm		µm	µm	
		max.				max.	max.	
G2	0 – 7	2	red	0 –2	–1 –3	1	0,1	h13
			blue	–2 –4	–3 –5			
			white (grey)	–4 –6	–5 –7			

[1] *The tolerance values apply to the centre point of the needle roller.*

Needle roller and cage assemblies for centrifugal forces and high acceleration forces (KZK, KBK)

Needle roller and cage assemblies for connecting rod bearing arrangements

Designed for piston pin and crank pin bearing arrangements

Needle roller and cage assemblies for connecting rod bearing arrangements are used in the crank mechanisms of 2 and 4 stroke combustion engines as well as in compressors, for supporting crank pins and piston pins ➤*827*| ⧉ *4*. These cages support high centrifugal and acceleration forces and are suitable for high speeds.

For piston pin bearing arrangements, only needle roller and cage assemblies with the designation KZK and KBK may be used TPI 94. As catalogue needle roller and cage assemblies of type K are not designed to accommodate loads generated by centrifugal forces and high acceleration forces, non-compliance may result in failures.

The needle roller and cage assemblies for piston pin and crank pin bearing arrangements are described in detail in Technical Product Information TPI 94. This publication can be requested from Schaeffler.

4
Crank pin and piston pin bearing arrangement

① *Needle roller and cage assembly for crank pins, externally guided*
② *Needle roller and cage assembly for piston pins, internally guided*

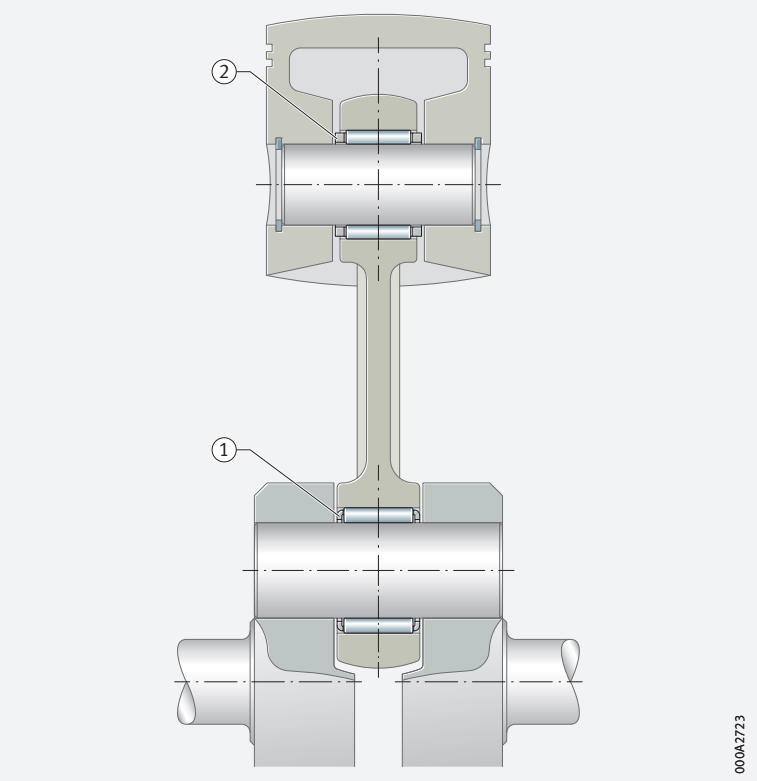

Needle roller and cage assemblies for crank pins (KZK)

Needle roller and cage assemblies for crank pins (series KZK) are externally guided, which means that the connecting rod bore guides the cage radially with little clearance ➤827|4. The radial movement of the cage in relation to the connecting rod bore and the rolling elements is as small as possible. The cages are made from quenched and tempered steel, have good wear resistance, high strength and large guidance surfaces which are designed for optimum lubrication.

Needle roller and cage assemblies for piston pins (KBK)

The needle roller and cage assemblies for piston pins (series KBK) are internally guided, which means that the piston pin guides the cage radially with little clearance ➤827|4. Due to the small radial internal clearance, tilting of the connecting rod is reduced to a minimum.
The bearings support high-frequency oscillating loads and are available for the majority of piston pin diameters in various widths, in accordance with the spacing between the piston centres. The low-wear steel cages are case hardened or quenched and tempered and have high strength.

Needle roller and cage assemblies for planetary gear bearing arrangements (KZK)

Needle roller and cage assemblies for planetary gear bearing arrangements

Needle roller and cage assemblies are also used for applications in planetary gear bearing arrangements, such as automatic gearboxes ➤828|5. As very high speeds, as well as centrifugal and acceleration forces, can occur in planetary gear bearing arrangements and the cage is therefore subject to high demands, the responsible Application Engineering and Design functions should select or design a suitable needle roller and cage assembly. In such cases, please consult Schaeffler.

5
Planetary gear bearing arrangement

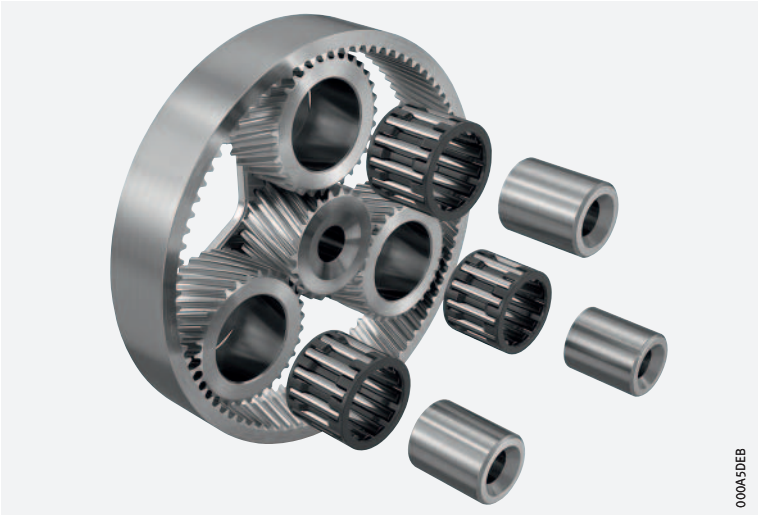

Needle roller and cage assemblies customised from profiled strip (K)

Customised radial needle roller and cage assemblies for specific requirements

These radial needle roller and cage assemblies are produced by bending flat cages BF and fitted with needle rollers after forming ➤*828*| 6. As a result, it is possible to achieve simple designs of clearance-free bearing arrangements with high running accuracy, load carrying capacity and speed suitability, in combination with very small radial and axial section height. Due to their high radial runout accuracy, the bearings are also suitable for precision applications. Since the needle roller and cage assemblies are not tied to defined dimension series but can be precisely produced to a wide range of diameter values in accordance with the specific application (shaft diameter of 105 mm to 1000 mm), they are an economical alternative to catalogue standard bearings. They are normally supplied bent into their final shape but can also be formed by the customer from BF flat cages. After forming, there is an open joint ➤*828*| 6. As a result, radial needle roller and cage assemblies can be easily mounted in recessed raceways. The function of the cages is not impaired by the opening.

BF flat cages and radial needle roller and cage assemblies produced from BF flat cages are described in detail in Technical Product Information TPI 203. This publication can be requested from Schaeffler.

6
Radial needle roller and cage assembly produced by bending from a flat cage BF

① *Open joint*



1.2 Load carrying capacity

Capable of supporting high radial loads, but not axial loads

Due to the line contact of the needle rollers, needle roller and cage assemblies are suitable for supporting high radial loads. In contrast to the ball, the needle has a larger contact area perpendicular to its axis. As a result, it can transmit higher forces, has greater rigidity and can support the same loads with smaller rolling element diameters. Due to the needle roller set, double row bearings have a particularly high radial load carrying capacity. They are used when the load carrying capacity of single row bearings is no longer sufficient.

Needle roller and cage assemblies cannot support axial forces ➤*833*|*1.14*. For axial loads, they can be combined with a bearing which is capable of supporting axial load, such as a deep groove ball bearing or a cylindrical roller bearing with axial load carrying capacity. In such cases, the axial bearing is arranged adjacent to the needle roller and cage assembly ➤*829*|*7*.

7
Passenger car gearbox: bearing arrangement of main shaft

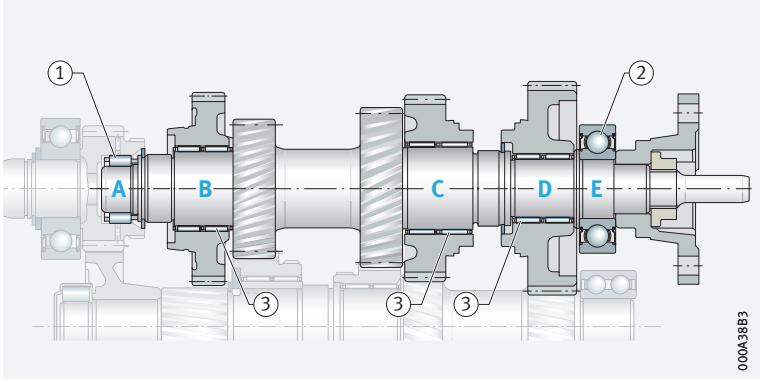

A – E = *bearing positions*

① *Cylindrical roller bearing and cage assembly as pilot bearing (non-locating bearing)*
② *Deep groove ball bearing (locating bearing, capable of supporting axial loads)*
③ *Needle roller and cage assemblies (non-locating bearing, capable of supporting radial loads only)*

1.3 Compensation of angular misalignments

The bearings are not suitable for the compensation of shaft misalignments relative to the housing bore

Needle roller and cage assemblies are not suitable for the compensation of angular misalignments. The extent to which a misalignment of the shaft can be tolerated relative to the housing bore is dependent on factors such as the design of the bearing arrangement, the size of the bearing, the operating clearance and the load. As a result, no guide value can be specified here for a possible misalignment.

In all cases, misalignments cause increased running noise, place increased strain on the cages and have a harmful influence on the operating life of the bearings.

1.4 Lubrication

Oil or grease lubrication is possible

Needle roller and cage assemblies are not greased. In order to prevent direct metallic contact between rolling elements, raceways and cages, they must be lubricated. Oil or grease lubrication is suitable.
The lubricant reduces the wear and also protects the surfaces against corrosion. The choice of lubricant is essentially dependent on the operating temperatures and speeds, but is also influenced by other factors.

The use of oil lubrication is preferred

For most applications involving needle roller and cage assemblies, oil should be used in preference as the lubricant.

Compatibility with plastic cages

When using bearings with plastic cages, compatibility between the lubricant and the cage material must be ensured if synthetic oils, lubricating greases with a synthetic oil base or lubricants containing a high proportion of EP additives are used.

Observe oil change intervals

Aged oil and additives in the oil can impair the operating life of plastics at high temperatures. As a result, stipulated oil change intervals must be strictly observed.

If there is any uncertainty regarding the suitability of the selected lubricant for the application, please consult Schaeffler or the lubricant manufacturer.

1.5 Sealing

The bearings are of an open design

Needle roller and cage assemblies are supplied without seals. As a result, sealing of the bearing position must be carried out in the adjacent construction. This must reliably prevent:

- moisture and contaminants from entering the bearing
- the egress of lubricant from the bearing position

1.6 Speeds

Speeds in the product tables

The product tables generally give two speeds for the bearings:

- the kinematic limiting speed n_G
- the thermal speed rating $n_{\vartheta r}$

Limiting speeds

The limiting speed n_G is the kinematically permissible speed of the bearing. Even under favourable mounting and operating conditions, this value should not be exceeded without prior consultation with Schaeffler ➤*64*.

The values in the product tables are valid for oil lubrication.

Values for grease lubrication

For grease lubrication, 60% of the value stated in the product tables is permissible in each case.

Reference speeds

$n_{\vartheta r}$ is used to calculate n_ϑ

The thermal speed rating $n_{\vartheta r}$ is not an application-oriented speed limit, but is a calculated ancillary value for determining the thermally safe operating speed n_ϑ ➤*64*.

1.7 Noise

Schaeffler Noise Index

The Schaeffler Noise Index (SGI) is not yet available for this bearing type ➤*69*. The data for these bearing series will be introduced and updated in stages.

Further information:

- ***medias*** *https://medias.schaeffler.com*

1.8 Temperature range

Limiting values

The operating temperature of the bearings is limited by:

- the dimensional stability of the rolling elements
- the cage
- the lubricant

Possible operating temperatures of needle roller and cage assemblies ➤*831*|▦*2*.

▦**2** *Permissible temperature ranges*

Operating temperature	Needle roller and cage assemblies	
	with plastic cage	with sheet steel cage and with cages made from copper-zinc alloy
	–20 °C to +120 °C	–30 °C to +140 °C

In the event of anticipated temperatures which lie outside the stated values, please contact Schaeffler.

1.9 Cages

The standard cages are made from sheet steel

The standard cages are made from sheet steel and, with an enveloping circle diameter $F_w \geqq 195$ mm, from a copper-zinc alloy. Bearings with a plastic cage are only available in particular sizes and have the suffix TV ➤*832*|▦*3* and ➤*838*|▦. Other cages are available by agreement. With such cages, however, suitability for high speeds and temperatures as well as the basic load ratings may differ from the values for the bearings with standard cages.

For high continuous temperatures and applications with difficult operating conditions, bearings with sheet steel cages should be used. If there is any uncertainty regarding cage suitability, please consult Schaeffler.

1.10 Internal clearance

Radial internal clearance

Influencing factors on the radial internal clearance

The radial internal clearance can be influenced by the needle roller sort as well as by the shaft and housing tolerances. When standard needle roller sorts are used, a radial internal clearance of C2 to CN is achieved (radial internal clearance for needle and cylindrical roller bearings to DIN 620-4), if the shaft and housing tolerances are observed ➤*834*|▦*4* and normal operating conditions are present. If the actual dimensions have a plus tolerance, a radial internal clearance of 0 can be achieved.

Checking the enveloping circle diameter

F_w can only be checked in a mounted condition

The outer and inner enveloping circle diameters E_w and F_w cannot be measured in an unmounted condition. As a result, the function of the bearings is checked using plug gauges and locating rings in accordance with the methods indicated in DIN 620-1/ISO 1132-2. In order to carry out the check, the needle roller and cage assemblies are placed in a locating ring, which corresponds to the specific nominal dimension E_w of the needle roller and cage assembly. The function of the needle roller and cage assembly is ensured if the plug gauge, which corresponds to the nominal dimension F_w, can be inserted and rotated without jamming.

1.11 Dimensions, tolerances

Dimension standards

The main dimensions of single row needler roller and cage assemblies correspond to DIN 5405-1:2016 and ISO 3030:2011, where standardised.

Tolerances

Needle rollers

The needle rollers correspond to DIN 5402-3:2012 and ISO 3096:1996. The diameters of all needle rollers in a needle roller and cage assembly lie within the tolerance of 2 µm ➤831|▦2.

Width B_c

The deviations for cage width B_c are as follows for all needle roller and cage assemblies: B_c –0,2/–0,8 ➤838|▦.

1.12 Suffixes

Suffixes describe the design and features of a bearing in more detail.

▦3 *Suffixes and corresponding descriptions*

Suffix	Description of suffix	
TV	Cage made from glass fibre reinforced polyamide PA66	Standard
ZW	Double row design (only available in certain enveloping circle diameters)	

1.13 Structure of bearing designation

With ***medias*** interchange, equivalent Schaeffler bearing designations can be determined for bearing designations from other rolling bearing manufacturers *https://www.schaeffler.de/std/1B69*.

The designation of bearings follows a set model. Examples ➤832|8 and ➤832|9. The composition of designations is subject to DIN 623-1 ➤102|10.

8 *Single row needle roller and cage assembly: designation structure*

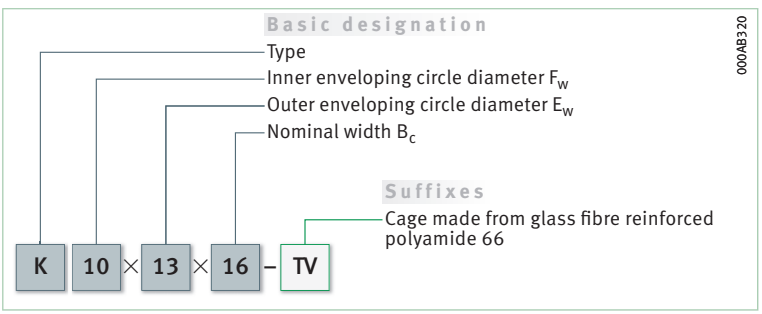

9 *Double row needle roller and cage assembly: designation structure*

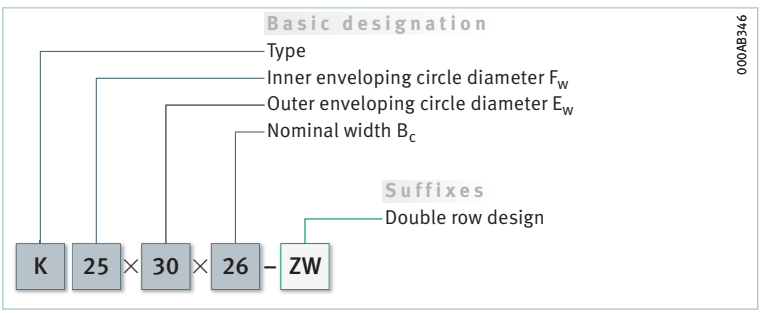

1.14 Dimensioning

Equivalent dynamic bearing load

✎ *$P = F_r$ under purely radial load of constant magnitude and direction*

The basic rating life equation $L = (C_r/P)^p$ used in the dimensioning of bearings under dynamic load assumes a load of constant magnitude and direction. In radial bearings, this is a purely radial load F_r. If this condition is met, the bearing load F_r is used in the rating life equation for P ($P = F_r$).

Needle roller and cage assemblies can only support radial loads. Thus, for these bearings ➤*833*| *1*.

1
Equivalent dynamic load

$$P = F_r$$

Legend

P	N	Equivalent dynamic bearing load
F_r	N	Radial load.

Equivalent static bearing load

For needle roller and cage assemblies subjected to static load ➤*833*| *2*.

2
Equivalent static load

$$P_0 = F_{0r}$$

Legend

P_0	N	Equivalent static bearing load
F_{0r}	N	Largest radial load present (maximum load).

Static load safety factor

✎ *$S_0 = C_0/P_0$*

In addition to the basic rating life L (L_{10h}), it is also always necessary to check the static load safety factor S_0 ➤*833*| *3*.

3
Static load safety factor

$$S_0 = \frac{C_0}{P_0}$$

Legend

S_0	–	Static load safety factor
C_0	N	Basic static load rating
P_0	N	Equivalent static bearing load.

1.15 Minimum load

✎ *In order to prevent damage due to slippage, a minimum radial load of $P > C_{0r}/60$ is required*

In order that no slippage occurs between the contact partners, the needle roller and cage assemblies must be constantly subjected to a sufficiently high load. Based on experience, a minimum radial load of the order of $P > C_{0r}/60$ is thus necessary. In most cases, however, the radial load is already higher than the requisite minimum load due to the weight of the supported parts and the external forces.

If the minimum radial load is lower than indicated above, please consult Schaeffler.

1.16 Design of bearing arrangements

The shaft and housing design and the lateral restriction (axial location) of the bearing position is crucial to the correct function of needle roller and cage assemblies ➤834|▦4, ➤835|⧉10 and ➤835|⧉11.

Raceways for bearings without bearing rings (direct bearing arrangement)

✎ Produce the raceway as a rolling bearing raceway

If the needle roller and cage assemblies run directly on the shaft and/or in the housing bore (so-called direct bearing arrangement), then the raceway for the rolling elements on the shaft and in the housing must be produced as a rolling bearing raceway (hardened and ground). Design of raceways ➤834|▦4. The surface hardness of the raceways must be 670 HV to 840 HV, the hardening depth CHD or SHD must be sufficiently large. The values in the table refer to commonly encountered application examples. If the shaft cannot be produced as a raceway, the needle roller and cage assemblies can be combined with Schaeffler bearing rings. However, the section height of the bearings will then be increased by the thickness of the rings.

▦4 *Tolerance classes and surface design of raceways for needle roller and cage assemblies (direct bearing arrangement)*

Shaft diameter Nominal dimension mm		Bore tolerance[1]	Shaft tolerance[1] Operating clearance			Design of raceway		
						Recommended mean roughness value Ramax (Rzmax)	Roundness tolerance	Parallelism tolerance
over	incl.		small	normal	large	µm	max.	max.
–	80	G6	j5	h5	g6	0,2 (1)	IT3	IT3
		H6	h5	g5	f6			
80	120	G6	h5	g5	f6	0,3 (1,6)		
120	–	G6	h5	g5	f6	0,4 (2,5)		
		H6	–	f5	e6			

[1] *The envelope requirement Ⓔ applies.*

Raceway width for direct bearing arrangement and axial running surfaces

✎ Mounting dimensions for needle roller and cage assemblies and surface quality of the running surfaces

The raceway width must be at least equal to the nominal width B_c (B_c is produced with a (–) tolerance); values for B_c ➤838|▦ and ➤835|⧉10. The spacing between the axial running surfaces of the cage must be sufficiently large. The spacing dimension for running surfaces is given as B_c H12 Ⓔ, in order to avoid jamming of the needle roller and cage assemblies (H12 in accordance with ISO 286-2).
The lateral running surfaces for the needle roller and cage assemblies must be designed as precision machined (Ramax 2 recommended) and wear-resistant ➤835|⧉10. Interruptions in the running surfaces should be avoided.

✎ Example

For a design envelope of B_c = 10 mm, a needle roller and cage assembly with the nominal width B_c = 10 mm is suitable, as the maximum cage width is 9,8 (0/–0,6) mm.

10
Raceway width and axial running surfaces for needle roller and cage assemblies

B_c H12 = *nominal width*
B_c −0,2/−0,8 = *cage width*
Ramax = *maximum roughness of running surfaces*

① *Location by means of shaft shoulder, axial washer and snap ring*
② *Axial washer*
③ *Snap ring*

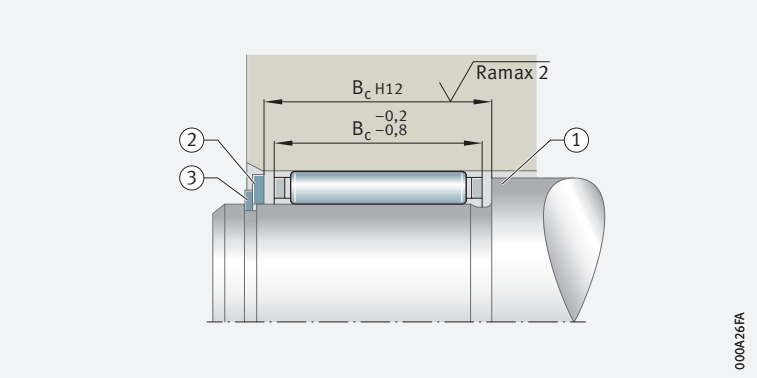

Axial guidance and location of needle roller and cage assemblies

Guidance can be provided by the shaft or on the housing

Needle roller and cage assemblies must be axially guided and located. Guidance can be provided by the shaft or on the housing ➤*835*|*10* and ➤*835*|*11*. Snap rings or an appropriately designed adjacent construction are suitable for this purpose. If location is by means of snap rings or retaining rings, a washer must be arranged in front of the rings ➤*835*|*10*. The overlap between the ring and washer must be sufficiently large.

11
Axial location by means of housing parts (lateral guidance on housing)

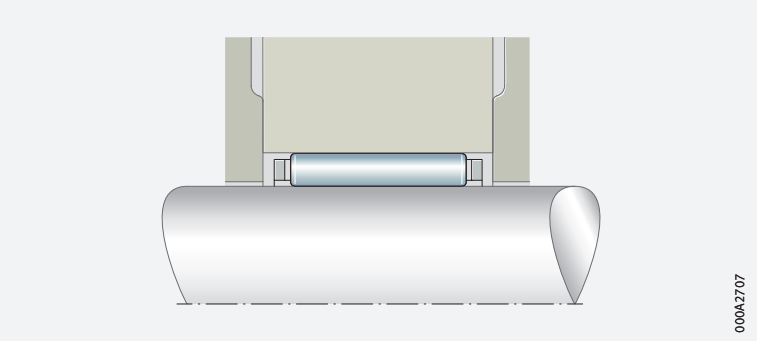

Steels for the raceway (direct bearing arrangement)

Through hardening steels

Through hardening steels in accordance with ISO 683-17 (e.g. 100Cr6) are suitable as materials for rolling bearing raceways in direct bearing arrangements. These steels can also be surface layer hardened.

Case hardening steels

Case hardening steels must correspond to DIN EN ISO 683-17 (such as 17MnCr5, 18CrNiMo7-6) or DIN EN ISO 683-3 (such as 16MnCr5).

Steels for inductive surface layer hardening

For flame and induction hardening, steels in accordance with DIN EN ISO 683-17 (e.g. C56E2, 43CrMo4) or DIN 17212 (e.g. Cf53) should be used.

Raceway hardness of less than 670 HV

If the raceway fulfils the requirements for rolling bearing materials but the raceway hardness is less than 670 HV (58 HRC), the static and dynamic load carrying capacity of the bearing is reduced. In order to determine the dynamic and static load carrying capacity of the bearing arrangement, the basic dynamic load rating C of the bearings must be multiplied by the reduction factor f_H (dynamic hardness factor) and the basic static load rating C_{0r} by the reduction factor f_{H0} (static hardness factor).

12
Dynamic hardness factor for raceway hardness values of less than 670 HV

f_H = *dynamic hardness factor*
HV, HRC = *surface hardness*

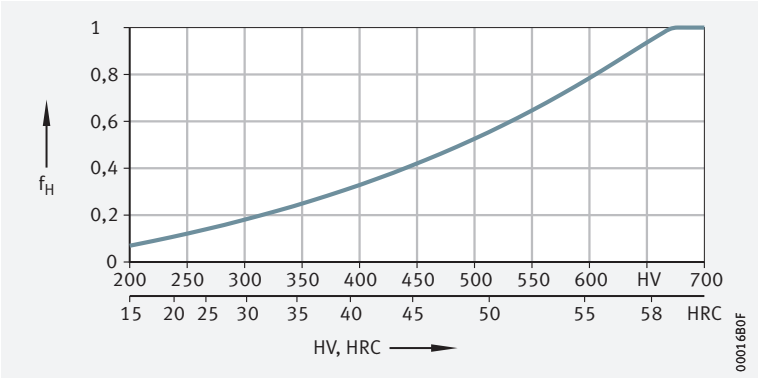

13
Static hardness factor for raceway hardness values of less than 670 HV

f_{H0} = *static hardness factor*
HV, HRC = *surface hardness*

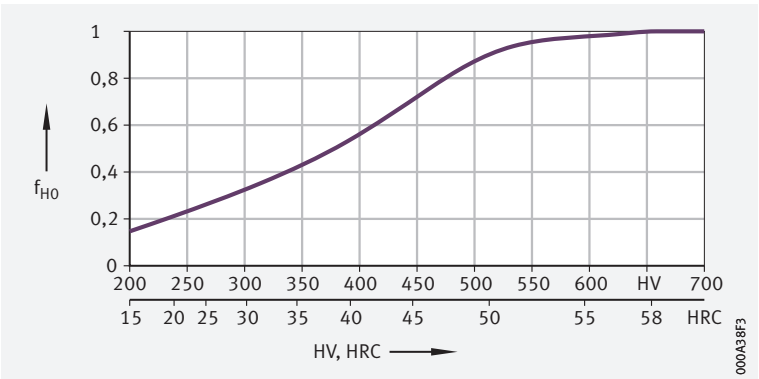

Determining the case hardening depth

Approximation value for case hardening depth

The reference value for the load present is the equivalent stress in accordance with the distortion energy hypothesis (DEH) as a function of the rolling element diameter D_w and the magnitude of the load.

For calculation of the case hardening depth CHD, the following applies:

4
Case hardening depth

$$CHD \geqq 0{,}052 \cdot D_w$$

Legend

CHD	mm	Case hardening depth
D_w	mm	Rolling element diameter.

The local hardness must always be above the local requisite hardness, which can be calculated from the equivalent stress.

Determining the surface hardening depth

In these surface hardening methods, the load and contact geometry must be taken into consideration when determining the requisite hardening depth.

For the calculation of the surface hardening depth SHD applies:

5
Surface hardening depth

$$SHD \geqq 140 \cdot D_w / R_{p0,2}$$

Legend

SHD	mm	Surface hardening depth
D_w	mm	Rolling element diameter
$R_{p0,2}$	N/mm²	Yield point of base material.

Paired arrangement of needle roller and cage assemblies

The needle rollers must correspond to the same tolerance sort

If two needle roller and cage assemblies are arranged immediately adjacent to each other, it must be ensured that the bearings are loaded uniformly. In this case, the needle rollers used in these needle roller and cage assemblies must belong to the same diameter sort (tolerance sort). The dimensions of the needle rollers fitted in the bearings must be indicated on the specific bearing packaging.

1.17 Mounting and dismounting

Ensure that the bearings are not damaged during mounting

Needle roller and cage assemblies are either slid onto the shaft and then inserted in the housing or are mounted in the housing and the shaft is then inserted. Mounting is carried out without load and using a screwdriver type motion.

Schaeffler Mounting Handbook

Rolling bearings must be handled with great care

Rolling bearings are well-proven precision machine elements for the design of economical and reliable bearing arrangements, which offer high operational security. In order that these products can function correctly and achieve the envisaged operating life without detrimental effect, they must be handled with care.

The Schaeffler Mounting Handbook MH 1 gives comprehensive information about the correct storage, mounting, dismounting and maintenance of rotary rolling bearings *https://www.schaeffler.de/std/1D53*. It also provides information which should be observed by the designer, in relation to the mounting, dismounting and maintenance of bearings, in the original design of the bearing position. This book is available from Schaeffler on request.

1.18 Legal notice regarding data freshness

The further development of products may also result in technical changes to catalogue products

Of central interest to Schaeffler is the further development and optimisation of its products and the satisfaction of its customers. In order that you, as the customer, can keep yourself optimally informed about the progress that is being made here and with regard to the current technical status of the products, we publish any product changes which differ from the printed version in our electronic product catalogue.

§ We therefore reserve the right to make changes to the data and illustrations in this catalogue. This catalogue reflects the status at the time of printing. More recent publications released by us (as printed or digital media) will automatically precede this catalogue if they involve the same subject. Therefore, please always use our electronic product catalogue to check whether more up-to-date information or modification notices exist for your desired product.

Link to electronic product catalogue

The following link will take you to the Schaeffler electronic product catalogue: *https://medias.schaeffler.com*.

1.19 Further information

In addition to the data in this chapter, the following chapters in Technical principles must also be observed in the design of bearing arrangements:

- Determining the bearing size ➤*34*
- Rigidity ➤*54*
- Friction and increases in temperature ➤*56*
- Speeds ➤*64*
- Bearing data ➤*97*
- Lubrication ➤*70*
- Sealing ➤*185*
- Design of bearing arrangements ➤*141*
- Mounting and dismounting ➤*194*

Needle roller and cage assemblies

Single row

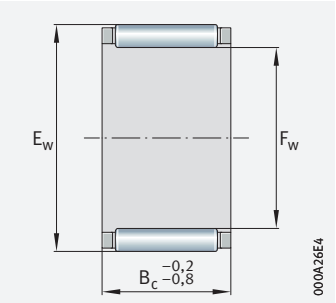

Single row

F_w = 3 – 19 mm

Main dimensions			Basic load ratings		Fatigue limit load	Limiting speed	Speed rating	Mass	Designation
F_w	E_w	B_c	dyn. C_r	stat. C_{0r}	C_{ur}	n_G	$n_{\vartheta r}$	m	➤*832|1.12* ➤*832|1.13*
			N	N	N	min^{-1}	min^{-1}	≈ g	
3	5	7	1 540	1 290	155	50 000	78 000	0,3	**K3×5×7-TV**
	5	9	1 710	1 480	192	50 000	80 000	0,4	**K3×5×9-TV**
	6	7	1 430	970	112	47 000	75 000	0,4	**K3×6×7-TV**
4	7	10	2 330	1 840	241	42 500	59 000	0,7	**K4×7×10-TV**
	7	7	1 740	1 270	148	42 500	59 000	0,5	**K4×7×7-TV**
5	8	10	3 000	2 650	360	39 000	47 000	0,9	**K5×8×10-TV**
	8	8	2 350	1 920	242	39 000	48 000	0,7	**K5×8×8-TV**
6	10	13	3 800	3 100	400	35 500	40 000	1,9	**K6×10×13-TV**
	9	10	3 350	3 150	425	36 500	40 000	1,1	**K6×9×10-TV**
	9	8	2 600	2 280	290	36 500	41 000	0,8	**K6×9×8-TV**
7	10	10	3 650	3 600	495	34 500	35 000	1	**K7×10×10-TV**
	10	8	2 850	2 650	335	34 500	36 000	0,9	**K7×10×8-TV**
	9	7	1 680	1 700	207	35 500	40 500	0,6	**K7×9×7-TV**
8	11	10	3 950	4 100	570	32 500	31 000	1,2	**K8×11×10-TV**
	11	13	5 100	5 800	800	32 500	30 500	1,7	**K8×11×13-TV**
	11	8	3 100	3 000	385	32 500	32 000	1	**K8×11×8-TV**
	12	10	5 000	4 700	570	31 500	29 000	2	**K8×12×10-TV**
9	12	10	4 500	5 000	690	31 000	27 500	1,5	**K9×12×10-TV**
	12	13	5 900	7 100	980	31 000	27 000	2,1	**K9×12×13-TV**
10	13	10	4 750	5 500	760	29 500	24 900	1,6	**K10×13×10-TV**
	13	13	6 200	7 800	1 080	29 500	24 400	2,3	**K10×13×13-TV**
	13	16	7 100	9 300	1 330	29 500	24 600	2,9	**K10×13×16-TV**
	14	10	5 800	6 000	730	29 000	23 500	2,5	**K10×14×10-TV**
	14	13	7 500	8 400	1 040	29 000	23 000	4,6	**K10×14×13-TV**
	16	12	8 100	7 200	1 020	27 500	21 800	5,5	**K10×16×12-TV**
12	15	10	4 900	6 100	840	27 000	21 500	2,9	**K12×15×10-TV**
	15	13	6 400	8 500	1 190	27 000	21 100	2,3	**K12×15×13-TV**
	16	13	8 000	9 400	1 170	26 500	19 900	3,6	**K12×16×13-TV**
	17	13	9 600	10 400	1 350	26 500	18 800	4,9	**K12×17×13-TV**
	18	12	10 000	9 900	1 430	26 000	18 100	6	**K12×18×12-TV**

medias *https://www.schaeffler.de/std/1F9A*

Main dimensions			Basic load ratings		Fatigue limit load	Limiting speed	Speed rating	Mass	Designation
F_w	E_w	B_c	dyn. C_r	stat. C_{0r}	C_{ur}	n_G	$n_{\vartheta r}$	m	➤*832|1.12* ➤*832|1.13*
			N	N	N	min^{-1}	min^{-1}	≈ g	
14	18	10	7 100	8 500	1 070	25 000	17 300	4	**K14×18×10**
	18	13	8 200	10 100	1 340	25 000	17 700	6,5	**K14×18×13**
	18	15	9 500	12 300	1 570	25 000	17 400	5	**K14×18×15-TV**
	18	17	10 800	14 400	1 920	25 000	17 300	8	**K14×18×17**
	20	12	10 300	10 600	1 520	24 300	16 200	8,5	**K14×20×12**
15	18	17	8 000	12 100	1 760	24 600	17 700	4,6	**K15×18×17-TV**
	19	10	7 500	9 200	1 160	24 300	16 200	5	**K15×19×10**
	19	13	8 500	10 900	1 450	24 300	16 600	7	**K15×19×13**
	19	17	11 300	15 600	2 070	24 300	16 200	9,5	**K15×19×17**
	20	13	9 900	11 500	1 460	23 900	15 900	7	**K15×20×13**
	21	15	14 300	16 400	2 250	23 600	14 700	11	**K15×21×15**
	21	21	19 400	24 300	3 350	23 600	14 400	17	**K15×21×21**
16	20	10	7 800	9 900	1 250	23 600	15 200	5,5	**K16×20×10**
	20	13	8 900	11 800	1 560	23 600	15 600	7,5	**K16×20×13**
	20	17	11 700	16 800	2 230	23 600	15 200	10	**K16×20×17**
	22	12	11 500	12 500	1 810	22 900	14 300	10	**K16×22×12**
	22	16	14 800	17 500	2 430	22 900	14 100	12	**K16×22×16**
	22	20	18 300	22 800	3 100	22 900	14 000	17	**K16×22×20**
	24	20	21 400	23 500	3 000	22 400	13 200	22	**K16×24×20**
17	21	10	8 100	10 600	1 340	22 900	14 400	5,5	**K17×21×10**
	21	13	10 400	14 600	1 840	22 900	14 100	6,5	**K17×21×13**
	21	17	12 200	17 900	2 390	22 900	14 400	9,5	**K17×21×17**
18	22	10	8 400	11 300	1 430	22 400	13 600	6	**K18×22×10**
	22	13	9 200	12 700	1 680	22 400	14 200	8	**K18×22×13**
	22	17	12 100	18 000	2 400	22 400	13 900	11	**K18×22×17**
	24	12	12 800	14 900	2 160	21 800	12 700	12	**K18×24×12**
	24	13	13 100	15 300	2 030	21 800	12 900	13	**K18×24×13**
	24	20	20 200	27 000	3 600	21 800	12 400	18	**K18×24×20**
	25	22	23 100	29 000	3 800	21 600	12 200	23	**K18×25×22**
19	23	13	9 500	13 500	1 790	21 800	13 500	8	**K19×23×13**
	23	17	12 500	19 200	2 550	21 800	13 200	11	**K19×23×17**

medias *https://www.schaeffler.de/std/1F9A*

Needle roller and cage assemblies

Single row
Double row

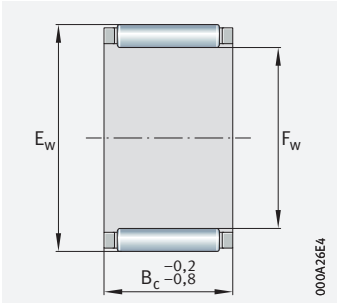

Single row

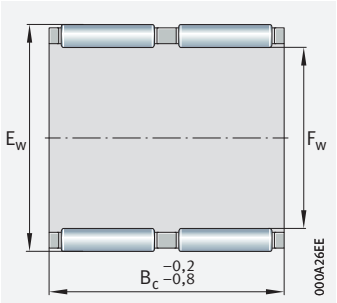

Double row (K..-ZW)

F_w = 20 – 30 mm

Main dimensions			Basic load ratings		Fatigue limit load	Limiting speed	Speed rating	Mass	Designation
F_w	E_w	B_c	dyn. C_r	stat. C_{0r}	C_{ur}	n_G	$n_{\vartheta r}$	m	➤*832|1.12* ➤*832|1.13*
			N	N	N	min^{-1}	min^{-1}	≈ g	
20	24	10	8 900	12 600	1 600	21 300	12 400	6,5	**K20×24×10**
	24	13	9 800	14 300	1 900	21 300	12 800	9	**K20×24×13**
	24	17	12 900	20 400	2 700	21 300	12 500	12	**K20×24×17**
	26	12	13 400	16 200	2 350	20 900	11 700	11	**K20×26×12**
	26	13	14 400	17 900	2 380	20 900	11 600	12	**K20×26×13**
	26	17	19 200	26 000	3 350	20 900	11 200	16	**K20×26×17**
	26	20	21 100	29 000	3 950	20 900	11 400	19	**K20×26×20**
	28	16	19 800	22 400	3 050	20 400	11 100	20	**K20×28×16**
	28	20	23 900	28 500	3 650	20 400	11 100	27	**K20×28×20**
	28	25	30 500	39 000	5 400	20 400	10 800	32	**K20×28×25**
	30	30	35 500	41 500	5 600	19 600	10 800	49	**K20×30×30**
21	25	13	10 100	15 100	2 010	20 900	12 300	9	**K21×25×13**
22	26	10	9 100	13 400	1 700	20 400	11 500	7,5	**K22×26×10**
	26	13	10 400	15 900	2 120	20 400	11 800	9,5	**K22×26×13**
	26	17	13 700	22 700	3 050	20 400	11 500	12	**K22×26×17**
	28	17	19 400	27 000	3 500	19 600	10 500	18	**K22×28×17**
	29	16	20 000	25 500	3 450	19 200	10 300	16	**K22×29×16**
	30	15	20 100	23 400	3 100	18 800	10 200	18	**K22×30×15-TV**
	32	24	34 000	40 000	5 000	18 100	9 700	43	**K22×32×24**
23	35	16	24 500	23 900	3 050	16 900	9 500	29	**K23×35×16-TV**
24	28	10	9 600	14 800	1 870	18 800	10 600	8,5	**K24×28×10**
	28	13	11 000	17 600	2 330	18 800	10 800	10	**K24×28×13**
	28	17	14 500	25 000	3 350	18 800	10 600	13	**K24×28×17**
	30	17	19 500	27 500	3 600	18 100	10 000	19	**K24×30×17**
	30	31	27 500	43 500	5 900	18 100	10 400	32	**K24×30×31-ZW**

medias *https://www.schaeffler.de/std/1F9A*

Main dimensions			Basic load ratings		Fatigue limit load	Limiting speed	Speed rating	Mass	Designation
F_w	E_w	B_c	dyn. C_r	stat. C_{0r}	C_{ur}	n_G	$n_{\vartheta r}$	m	➤*832|1.12* ➤*832|1.13*
			N	N	N	min^{-1}	min^{-1}	≈ g	
25	29	10	9 900	15 400	1 960	18 100	10 200	8,5	**K25×29×10**
	29	13	11 300	18 400	2 440	18 100	10 400	11	**K25×29×13**
	29	17	14 900	26 000	3 500	18 100	10 200	14	**K25×29×17**
	30	13	14 600	21 800	2 850	17 800	9 800	12	**K25×30×13**
	30	17	18 700	30 000	3 900	17 800	9 600	16	**K25×30×17**
	30	20	21 700	36 500	4 950	17 800	9 500	18	**K25×30×20**
	30	26	21 400	35 500	4 550	17 800	10 400	19	**K25×30×26-ZW**
	31	17	19 600	28 500	3 650	17 500	9 600	19	**K25×31×17**
	31	21	24 700	38 000	5 200	17 500	9 400	20	**K25×31×21**
	32	16	20 800	27 500	3 750	17 200	9 400	21	**K25×32×16**
	33	20	28 500	38 000	4 950	16 900	9 000	33	**K25×33×20**
	33	24	34 000	47 000	6 500	16 900	8 900	39	**K25×33×24**
	35	30	47 000	62 000	8 400	16 300	8 500	65	**K25×35×30**
26	30	13	11 600	19 200	2 550	17 500	10 100	11	**K26×30×13**
	30	17	15 200	27 500	3 650	17 500	9 800	15	**K26×30×17**
	30	22	15 700	28 500	3 600	17 500	10 400	12	**K26×30×22-ZW**
28	33	13	15 300	24 200	3 150	16 100	8 900	13	**K28×33×13**
	33	17	19 700	33 500	4 350	16 100	8 700	17	**K28×33×17**
	34	17	21 800	33 500	4 350	15 800	8 600	24	**K28×34×17**
	35	16	21 500	29 500	4 000	15 600	8 700	24	**K28×35×16**
	35	18	24 000	34 000	4 800	15 600	8 600	27	**K28×35×18**
	40	25	45 500	55 000	6 800	14 400	7 700	70	**K28×40×25**
30	34	13	12 300	21 700	2 900	15 300	8 900	14	**K30×34×13**
	35	13	15 600	25 500	3 350	15 100	8 400	14	**K30×35×13**
	35	17	19 600	34 000	4 350	15 100	8 300	19	**K30×35×17**
	35	27	30 500	59 000	8 600	15 100	8 100	30	**K30×35×27**
	37	16	23 100	33 500	4 550	14 600	8 000	27	**K30×37×16**
	37	18	26 000	38 500	5 400	14 600	8 000	30	**K30×37×18**
	40	18	32 000	40 000	5 100	14 000	7 600	48	**K30×40×18**
	40	30	49 000	69 000	9 400	14 000	7 500	73	**K30×40×30**

medias *https://www.schaeffler.de/std/1F9A*

Needle roller and cage assemblies

Single row
Double row

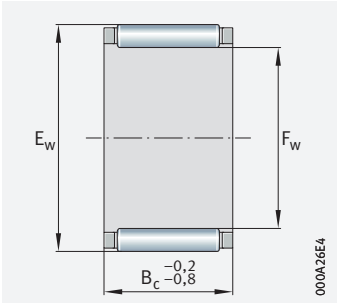

Single row

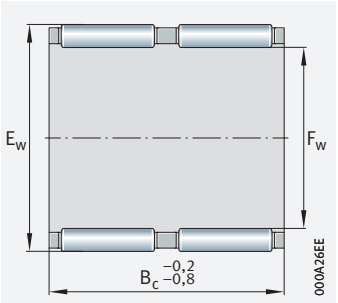

Double row (K..-ZW)

F_w = 32 – 47 mm

Main dimensions			Basic load ratings		Fatigue limit load	Limiting speed	Speed rating	Mass	Designation
F_w	E_w	B_c	dyn. C_r	stat. C_{0r}	C_{ur}	n_G	$n_{\vartheta r}$	m	➤*832|1.12* ➤*832|1.13*
			N	N	N	min^{-1}	min^{-1}	≈ g	
32	37	13	15 500	25 500	3 350	14 200	8 100	18	**K32×37×13**
	37	17	19 900	35 500	4 600	14 200	7 900	19	**K32×37×17**
	37	27	30 000	60 000	8 600	14 200	7 800	30	**K32×37×27**
	38	20	26 500	45 000	6 100	14 000	7 700	30	**K32×38×20**
	39	16	23 800	35 500	4 800	13 800	7 600	37	**K32×39×16**
	39	18	26 500	41 000	5 700	13 800	7 500	31	**K32×39×18**
	40	25	37 500	58 000	8 000	13 600	7 400	49	**K32×40×25**
	40	42	50 000	84 000	10 700	13 600	7 800	77	**K32×40×42-ZW-TV**
	46	32	66 000	84 000	11 300	12 600	6 700	119	**K32×46×32**
35	40	13	16 200	28 000	3 650	13 100	7 500	19	**K35×40×13**
	40	17	20 800	38 500	5 000	13 100	7 400	21	**K35×40×17**
	40	25	29 500	60 000	8 500	13 100	7 200	31	**K35×40×25**
	40	27	25 000	48 500	6 800	13 100	7 900	39	**K35×40×27-TV**
	42	16	24 400	37 500	5 100	12 700	7 100	34	**K35×42×16**
	42	18	27 500	43 000	6 100	12 700	7 100	34	**K35×42×18**
	42	20	30 000	49 000	6 300	12 700	7 000	37	**K35×42×20**
	42	30	39 000	68 000	9 500	12 700	7 200	67	**K35×42×30**
	45	20	37 000	50 000	6 600	12 300	6 800	56	**K35×45×20**
	45	30	53 000	79 000	10 700	12 300	6 700	80	**K35×45×30**
37	42	17	22 400	43 000	5 600	12 400	6 900	22	**K37×42×17**
38	43	17	20 500	38 500	4 950	12 100	7 000	29	**K38×43×17**
	43	27	31 500	68 000	9 700	12 100	6 800	43	**K38×43×27**
	46	20	35 500	57 000	7 300	11 700	6 300	47	**K38×46×20**
	46	32	55 000	99 000	14 400	11 700	6 200	76	**K38×46×32**
39	44	26	27 500	56 000	7 200	11 800	7 000	45	**K39×44×26-ZW**

medias *https://www.schaeffler.de/std/1F9A*

Main dimensions			Basic load ratings		Fatigue limit load	Limiting speed	Speed rating	Mass	Designation
F_w	E_w	B_c	dyn. C_r	stat. C_{0r}	C_{ur}	n_G	$n_{\vartheta r}$	m	➤*832*|*1.12* ➤*832*|*1.13*
			N	N	N	min^{-1}	min^{-1}	≈ g	
40	45	13	17 600	32 500	4 250	11 500	6 600	22	**K40×45×13**
	45	17	21 400	41 500	5 300	11 500	6 700	31	**K40×45×17**
	45	27	33 000	73 000	10 500	11 500	6 500	46	**K40×45×27**
	47	18	29 500	50 000	7 000	11 300	6 300	39	**K40×47×18**
	47	20	32 500	57 000	7 300	11 300	6 200	42	**K40×47×20**
	48	20	36 000	59 000	7 700	11 100	6 100	49	**K40×48×20**
42	47	13	17 800	33 500	4 400	11 000	6 400	18	**K42×47×13**
	47	17	21 700	43 000	5 500	11 000	6 400	32	**K42×47×17**
	47	30	33 500	76 000	10 200	11 000	6 400	54	**K42×47×30-ZW**
	50	20	35 000	57 000	7 400	10 700	6 000	53	**K42×50×20**
43	48	17	21 600	43 000	5 500	10 800	6 300	30	**K43×48×17**
	48	27	33 500	75 000	10 800	10 800	6 200	50	**K43×48×27**
45	50	17	22 500	46 000	5 900	10 300	6 100	34	**K45×50×17**
	50	27	34 500	80 000	11 600	10 300	5 900	51	**K45×50×27**
	52	18	31 500	57 000	8 000	10 100	5 700	42	**K45×52×18**
	53	20	39 000	67 000	8 800	10 000	5 500	55	**K45×53×20**
	53	21	38 500	67 000	8 800	10 000	5 600	60	**K45×53×21**
	53	28	52 000	98 000	13 900	10 000	5 400	81	**K45×53×28**
	59	18	44 500	54 000	7 000	9 400	5 400	72	**K45×59×18-TV**
	59	32	73 000	103 000	14 000	9 400	5 300	148	**K45×59×32**
47	52	17	23 300	49 000	6 300	9 900	5 800	35	**K47×52×17**
	52	27	35 000	83 000	12 000	9 900	5 700	51	**K47×52×27**

medias *https://www.schaeffler.de/std/1F9A*

Needle roller and cage assemblies

Single row
Double row

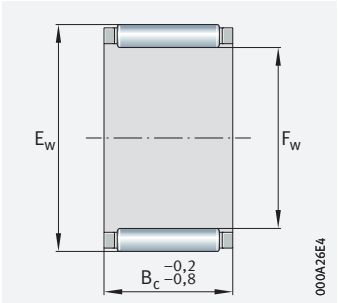

Single row

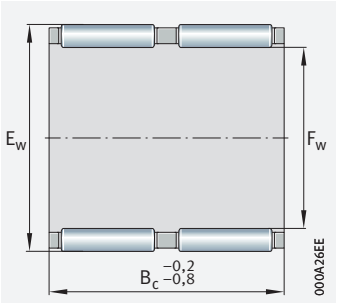

Double row (K..-ZW)

F_w = 50 – 95 mm

Main dimensions			Basic load ratings		Fatigue limit load	Limiting speed	Speed rating	Mass	Designation
F_w	E_w	B_c	dyn. C_r	stat. C_{0r}	C_{ur}	n_G	$n_{\vartheta r}$	m	➤*832|1.12* ➤*832|1.13*
			N	N	N	min^{-1}	min^{-1}	≈ g	
50	55	13,5	18 200	36 500	4 700	9 300	5 700	30	**K50×55×13,5**
	55	17	26 000	57 000	7 500	9 300	5 300	35	**K50×55×17**
	55	20	26 500	60 000	7 900	9 300	5 500	43	**K50×55×20**
	55	30	39 000	97 000	14 100	9 300	5 400	65	**K50×55×30**
	57	18	33 500	63 000	9 000	9 200	5 200	47	**K50×57×18**
	58	20	35 500	62 000	8 900	9 100	5 400	75	**K50×58×20**
	58	25	44 000	81 000	11 000	9 100	5 300	90	**K50×58×25**
52	57	12	18 000	36 500	4 700	9 000	5 400	24	**K52×57×12**
55	60	20	28 500	66 000	8 800	8 500	5 100	40	**K55×60×20**
	60	27	38 000	97 000	13 800	8 500	4 950	60	**K55×60×27**
	60	30	41 000	108 000	15 700	8 500	4 950	71	**K55×60×30**
	62	18	35 500	70 000	9 900	8 400	4 750	52	**K55×62×18**
	63	20	40 000	74 000	9 700	8 300	4 800	67	**K55×63×20**
	63	25	50 000	100 000	13 900	8 300	4 700	80	**K55×63×25**
	63	32	62 000	130 000	18 900	8 300	4 650	102	**K55×63×32**
58	65	18	35 000	70 000	10 000	8 000	4 650	52	**K58×65×18**
	65	36	49 000	107 000	14 900	8 000	5 100	127	**K58×65×36-ZW**
60	65	20	29 500	72 000	9 500	7 800	4 750	52	**K60×65×20**
	65	30	42 500	116 000	16 900	7 800	4 650	77	**K60×65×30**
	66	33	46 000	112 000	15 400	7 800	4 800	104	**K60×66×33-ZW**
	66	40	58 000	151 000	20 200	7 800	4 650	116	**K60×66×40-ZW**
	68	20	43 500	85 000	11 200	7 700	4 400	71	**K60×68×20**
	68	23	49 500	101 000	13 800	7 700	4 350	94	**K60×68×23**
	68	25	53 000	111 000	15 500	7 700	4 350	89	**K60×68×25**
	68	30	44 500	88 000	11 500	7 700	4 950	129	**K60×68×30-ZW**
	75	42	118 000	199 000	27 500	7 300	4 050	240	**K60×75×42**
62	70	40	66 000	146 000	20 900	7 400	4 550	174	**K62×70×40-ZW**
64	70	16	28 000	60 000	8 300	7 300	4 500	53	**K64×70×16**

medias *https://www.schaeffler.de/std/1F9A*

Main dimensions			Basic load ratings		Fatigue limit load	Limiting speed	Speed rating	Mass	Designation
F_w	E_w	B_c	dyn. C_r	stat. C_{0r}	C_{ur}	n_G	$n_{\vartheta r}$	m	➤*832|1.12* ➤*832|1.13*
			N	N	N	min^{-1}	min^{-1}	≈ g	
65	70	20	30 500	77 000	10 200	7 300	4 450	56	**K65×70×20**
	70	30	44 000	124 000	18 100	7 300	4 350	83	**K65×70×30**
	73	23	46 000	94 000	12 400	7 100	4 300	108	**K65×73×23**
	73	30	57 000	123 000	17 400	7 100	4 300	141	**K65×73×30**
68	74	20	35 500	84 000	11 200	6 900	4 200	71	**K68×74×20**
	74	30	46 500	118 000	17 200	6 900	4 300	100	**K68×74×30**
	74	35	48 500	125 000	17 500	6 900	4 450	120	**K68×74×35-ZW**
70	76	20	36 000	86 000	11 500	6 700	4 100	71	**K70×76×20**
	76	30	52 000	139 000	20 400	6 700	4 000	110	**K70×76×30**
	78	30	60 000	135 000	19 100	6 600	4 000	148	**K70×78×30**
72	80	20	41 500	85 000	12 200	6 400	4 000	98	**K72×80×20**
73	79	20	37 000	90 000	12 000	6 400	4 000	75	**K73×79×20**
75	81	20	37 500	94 000	12 600	6 300	3 850	79	**K75×81×20**
	81	30	52 000	143 000	20 700	6 300	3 850	114	**K75×81×30**
	83	23	50 000	109 000	14 400	6 200	3 800	124	**K75×83×23**
	83	30	62 000	143 000	20 300	6 200	3 800	147	**K75×83×30**
	83	35	63 000	147 000	20 300	6 200	3 950	182	**K75×83×35-ZW**
	83	40	73 000	177 000	25 500	6 200	3 900	211	**K75×83×40-ZW**
80	86	20	38 500	98 000	13 100	5 900	3 700	60	**K80×86×20**
	88	30	71 000	176 000	25 500	5 800	3 400	138	**K80×88×30**
	88	40	76 000	192 000	27 500	5 800	3 700	227	**K80×88×40-ZW**
	88	46	88 000	231 000	30 500	5 800	3 650	260	**K80×88×46-ZW**
85	92	20	44 500	108 000	15 400	5 500	3 450	102	**K85×92×20**
90	97	20	45 000	113 000	16 100	5 200	3 300	109	**K90×97×20**
	98	27	61 000	150 000	20 600	5 200	3 300	150	**K90×98×27**
	98	30	68 000	172 000	24 400	5 200	3 300	172	**K90×98×30**
95	103	30	69 000	180 000	25 500	4 950	3 150	165	**K95×103×30**
	103	40	83 000	228 000	33 000	4 950	3 200	266	**K95×103×40-ZW**

medias *https://www.schaeffler.de/std/1F9A*

Needle roller and cage assemblies

Single row

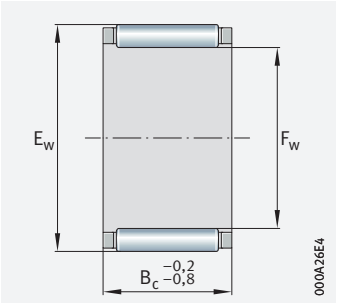

Single row

F_w = 100 – 265 mm

Main dimensions			Basic load ratings		Fatigue limit load	Limiting speed	Speed rating	Mass	Designation
F_w	E_w	B_c	dyn. C_r	stat. C_{0r}	C_{ur}	n_G	$n_{\vartheta r}$	m	➤*832|1.12* ➤*832|1.13*
			N	N	N	min^{-1}	min^{-1}	≈ g	
100	107	21	48 000	127 000	17 900	4 750	3 100	120	**K100×107×21**
	108	27	57 000	143 000	19 200	4 700	3 200	185	**K100×108×27**
	108	30	71 000	188 000	26 500	4 700	3 050	180	**K100×108×30**
105	112	21	47 500	127 000	17 700	4 500	3 000	129	**K105×112×21**
110	117	24	56 000	158 000	20 200	4 300	2 850	172	**K110×117×24**
	118	30	78 000	219 000	30 000	4 300	2 750	217	**K110×118×30**
115	123	27	63 000	170 000	22 000	4 100	2 850	200	**K115×123×27**
120	127	24	59 000	174 000	21 800	3 950	2 650	165	**K120×127×24**
125	133	35	86 000	260 000	35 000	3 800	2 600	275	**K125×133×35**
130	137	24	61 000	186 000	22 700	3 650	2 500	170	**K130×137×24**
135	143	35	91 000	290 000	38 000	3 550	2 390	300	**K135×143×35**
145	153	26	74 000	225 000	27 500	3 300	2 280	262	**K145×153×26**
150	160	46	147 000	470 000	61 000	3 150	2 100	570	**K150×160×46**
155	163	26	75 000	236 000	28 500	3 100	2 180	265	**K155×163×26**
160	170	46	152 000	510 000	64 000	2 950	1 970	550	**K160×170×46**
165	173	26	81 000	265 000	31 000	2 900	2 030	320	**K165×173×26**
175	183	32	99 000	350 000	42 000	2 750	1 930	400	**K175×183×32**
185	195	37	128 000	425 000	49 500	2 600	1 840	607	**K185×195×37**
195	205	37	133 000	450 000	52 000	2 450	1 760	620	**K195×205×37**
210	220	42	154 000	560 000	64 000	2 280	1 590	740	**K210×220×42**
220	230	42	158 000	590 000	67 000	2 180	1 510	790	**K220×230×42**
240	250	42	164 000	630 000	70 000	2 000	1 390	850	**K240×250×42**
265	280	50	255 000	860 000	93 000	1 800	1 160	1 810	**K265×280×50**

medias *https://www.schaeffler.de/std/1F9A*



Drawn cup needle roller bearings



Matrix for bearing preselection 851

1 Drawn cup needle roller bearings 852

1.1 Bearing design 853
1.2 Load carrying capacity 855
1.3 Compensation of angular misalignments 855
1.4 Lubrication 856
1.5 Sealing 856
1.6 Speeds 857

1.7 Noise *857*
1.8 Temperature range *858*
1.9 Cages *858*
1.10 Internal clearance *858*
1.11 Dimensions, tolerances *859*
1.12 Suffixes *860*
1.13 Structure of bearing designation *860*
1.14 Dimensioning *860*
1.15 Minimum load *861*
1.16 Design of bearing arrangements *861*
1.17 Mounting and dismounting *864*
1.18 Legal notice regarding data freshness *865*
1.19 Further information *865*
Product tables *866*
Drawn cup needle roller bearings with open ends, drawn cup needle roller bearings with closed end, unsealed *866*
Drawn cup needle roller bearings with open ends, drawn cup needle roller bearings with closed end, sealed *872*
Drawn cup needle roller bearings with open ends, full complement, unsealed *874*

Matrix for bearing preselection

The matrix gives an overview of the types and design features.

It can be used to make a preliminary assessment of whether a bearing is fundamentally suitable for the envisaged application.

The additional information provided in the product chapter (see column "detailed information") and in the Technical principles must, however, be observed in addition to this overview in selection of the bearing.

+++ extremely suitable
++ highly suitable
+ suitable
(+) suitable with restrictions
– not suitable/not applicable
✓ available

Design features and suitability			Drawn cup needle roller bearings			
			open	sealed	full complement, open	detailed information ➤ 852
Load carrying capacity	radial		+++	+++	+++	➤ 855|1.2
	axial, one direction		–	–	–	➤ 855|1.2
	axial, both directions		–	–	–	➤ 855|1.2
	moments		–	–	–	
Compensation of angular misalignments	static		–	–	–	➤ 855|1.3
	dynamic		–	–	–	➤ 855|1.3
Bearing design	cylindrical bore		✓	✓	✓	➤ 853|1.1
	tapered bore		–	–	–	
	separable		–	–	–	➤ 864|1.17
Lubrication	greased		–	✓	–[1]	➤ 856|1.4
Sealing	open		✓	–	✓	➤ 856|1.5
	non-contact		–	–	–	➤ 856|1.5
	contact		–	✓	–	➤ 856|1.5
Operating temperature in °C	from to		–30 +140[2]	–20 +100	–30 +140	➤ 858|1.8
Suitability for	high speeds		+++	+++	+	➤ 857|1.6
	high running accuracy		++	++	++	➤ 859|1.11 ➤ 115
	low-noise running		+	+	+	➤ 857|1.7 ➤ 27
	high rigidity		++	++	++	➤ 54
	reduced friction		+	+	+	➤ 56
	length compensation within bearing		–	–	–	
	non-locating bearing arrangement		++	++	++	➤ 141
	locating bearing arrangement		–	–	–	➤ 141
X-life bearings			–	–	–	
Enveloping circle diameter F_w in mm	from to		2 60	8 50	8 50	➤ 866
Product tables	from page ➤		866	872	874	

[1] Delivery with special grease for mounting only, bearings must be relubricated

[2] Valid for open, ungreased bearings with sheet steel cage. With polyamide cage –20 °C to +120 °C

1 Drawn cup needle roller bearings

The bearings:

- are particularly suitable for applications with a very small radial section height on account of their very low cross-sectional height ➤*852*|*1*
- are used if the housing bore is not suitable as a raceway for needle roller and cage assemblies
- can support high radial loads (are pure radial bearings) ➤*854*|*3*, ➤*854*|*4*, ➤*854*|*5*, ➤*855*|*6*
- require a considerably smaller radial design envelope than machined needle roller bearings ➤*852*|*1*
- usually run directly on the shaft (no inner ring) ➤*852*|*1*, ➤*855*|*7*
- permit relatively high speeds
- are easy to mount ➤*864*|*1.17*
- require no additional means of axial retention (as a result of which the housing bore is easy to produce) ➤*861*|*1.16*
- can be readily used to close off the shaft ends of bearing positions (drawn cup needle roller bearings with closed end) ➤*855*|*6*
- result in particularly compact, cost-effective and economical bearing arrangements

For an overview of other product-specific features, see the Matrix for bearing preselection ➤*851*.

1
Comparison of radial design envelope

① *Drawn cup needle roller bearing with open ends and cage*
② *Needle roller bearing with cage*

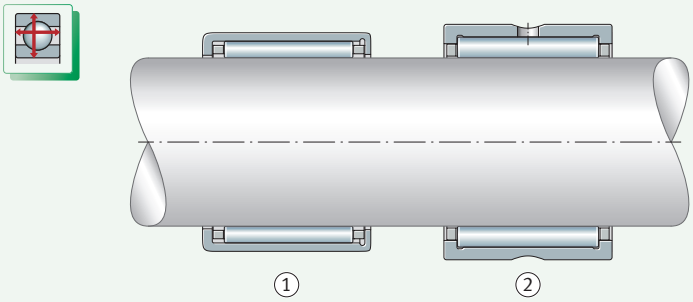

1.1 Bearing design

✎ *Design variants*

Drawn cup needle roller bearings with open ends are available as:

- standard drawn cup needle roller bearings with open ends and cage ➤*854*|🗀*3* and ➤*854*|🗀*4*
- full complement drawn cup needle roller bearings with open ends ➤*854*|🗀*5*
- special bearings ➤*855* and ➤*856*

Drawn cup needle roller bearings with closed end are available as:

- standard drawn cup needle roller bearings with closed end ➤*855*|🗀*6*
- special bearings ➤*855* and ➤*856*
- universal joint bearings ➤*855*

Drawn cup needle roller bearings

✎ *The outer cups are thin-walled and produced by forming methods*

Drawn cup needle roller bearings are part of the group of radial needle roller bearings. These ready-to-fit bearing arrangement elements are rolling bearings with a very small radial section height. They comprise thin-walled, drawn outer cups and needle roller and cage assemblies which together form a complete unit ➤*853*|🗀*2*, ➤*854*|🗀*3*, ➤*854*|🗀*5*, ➤*855*|🗀*6*. The cage guides the needle rollers parallel to the axis in pockets.

✎ *For bearing arrangements with a very small radial design envelope*

Due to the thin-walled outer cup and the absence of an inner ring, the bearings have a very low cross-sectional height ➤*852*|🗀*1*. As a result, they are particularly suitable for applications with a very small radial design envelope. The majority of the bearings are of a single row design and do not have a lubrication hole.

✎ *Drawn cup needle roller bearings can also be combined with inner rings IR or LR*

Due to the absence of an inner ring, drawn cup needle roller bearings require a hardened and ground bearing raceway on the shaft ➤*861*|*1.16*. If the shaft cannot be produced as a rolling bearing raceway, the bearings can be combined with inner rings IR or LR ➤*853*|🗀*2*. If wider inner rings are used, these can also serve as the running surface for sealing rings G and SD ➤*853*|🗀*2*.

🗀*2*

Drawn cup needle roller bearings with open ends and inner ring

① *Drawn cup needle roller bearing with open ends*
② *Standard inner ring*
③ *Wider inner ring*
④ *Sealing ring G*

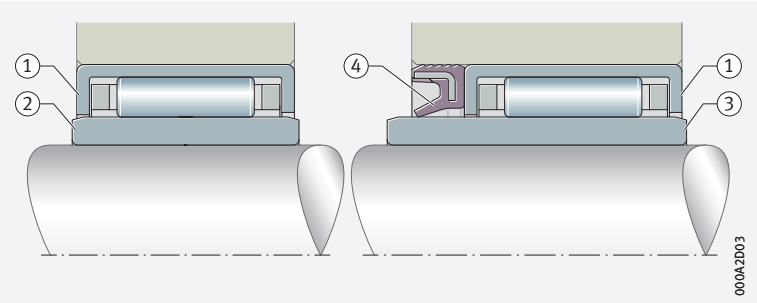

Standard drawn cup needle roller bearings with open ends and cage

✎ *In contrast to drawn cup needle roller bearings with closed end, the bearings are open*

Drawn cup needle roller bearings of this design are open at both ends and have the basic designation HK ➤*854*|🗀*3* and ➤*860*|*1.12*. They are supplied with needle roller and cage assemblies. Bearings with needle roller and cage assemblies allow higher speeds than the full complement designs. The bearings are available in open and sealed versions ➤*854*|🗀*3* and ➤*856*|*1.5*. Double row designs have a lubrication hole in the outer cup and the suffix ZW ➤*854*|🗀*4*.

3
Single row drawn cup needle roller bearings with open ends

F_r = *radial load*

① *Single row drawn cup needle roller bearing with open ends, open version*

② *Single row drawn cup needle roller bearing with open ends, sealed on both sides*

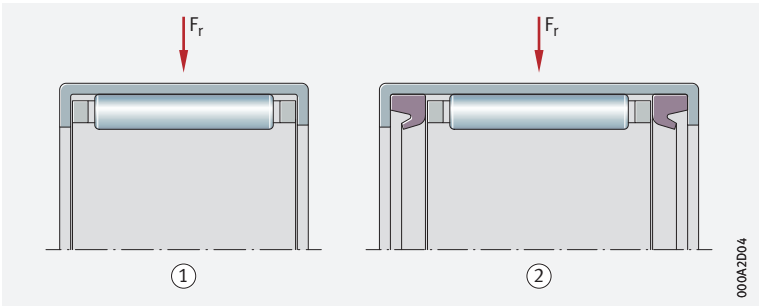

4
Double row drawn cup needle roller bearing with open ends

F_r = *radial load*

① *Lubrication hole*

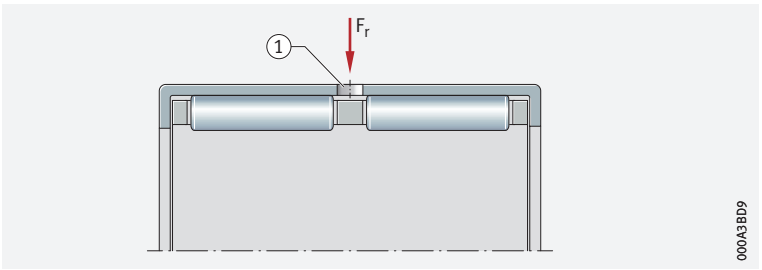

Full complement drawn cup needle roller bearings with open ends

✎ Particularly high load carrying capacity within a very small radial design envelope

Full complement drawn cup needle roller bearings with open ends have the basic designation HN ➤*854*|*5*. As these bearings have the maximum number of needle rollers, they offer extremely high load carrying capacity. However, they do not permit the speeds that are possible when drawn cup needle roller bearings with open ends are used in conjunction with rolling elements retained by a cage.

5
Full complement drawn cup needle roller bearing with open ends

F_r = *radial load*

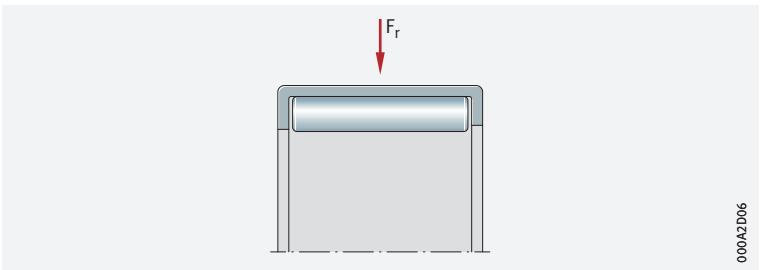

Drawn cup needle roller bearings with closed end

✎ In contrast to drawn cup needle roller bearings with open ends, the bearings are closed at one end

Drawn cup needle roller bearings of this design are closed at one end ➤*855*|*6*. They are thus suitable for closing off the shaft ends of bearing positions. This gives protection against injury by rotating shafts and protects the bearings against contamination and moisture. Depending on the size, the base is either smooth or lock-beaded (stiffened). The profiled base can also support small axial guidance forces. Drawn cup needle roller bearings with closed end are available in open and sealed versions ➤*855*|*6* and ➤*856*|*1.5*.

6
Drawn cup needle roller bearings with closed end

F_r = *radial load*

① *Drawn cup needle roller bearing with closed end, open version*

② *Drawn cup needle roller bearing with closed end, sealed version*

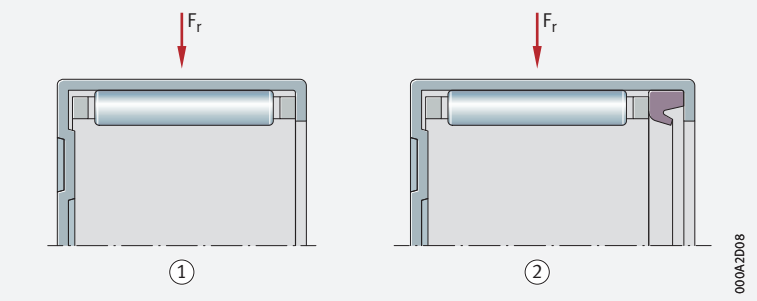

Special bearings

In addition to the standard catalogue range, special designs are available by agreement:

- with enveloping circle F_w from 2 mm to 100 mm
- for special noise requirements (bearings with special noise testing)

Universal joint bearings

For universal joints, universal joint bearings of series BU and BBU are available by agreement.

1.2 Load carrying capacity

The bearings are pure radial bearings

Drawn cup needle roller bearings can support high radial forces, but may only be subjected to radial load. If the bearing position is also required to support axial forces, the bearings can, for example, be combined with axial needle roller bearings AXW ➤855| 7.

7
Drawn cup needle roller bearing with open ends combined with axial needle roller bearing

F_r = *radial load*

F_a = *axial load*

① *Drawn cup needle roller bearing with open ends HK (for supporting radial loads)*

② *Axial needle roller bearing AXW (for supporting axial loads)*

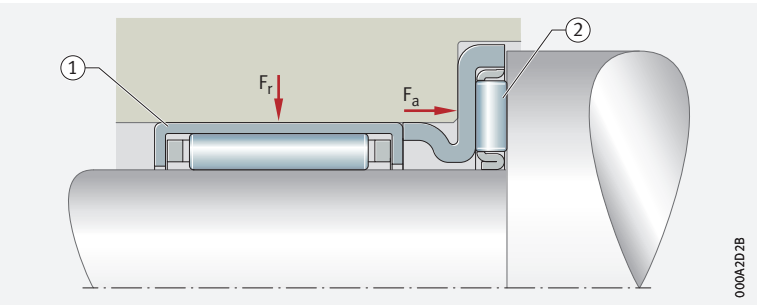

1.3 Compensation of angular misalignments

The bearings are not suitable for the compensation of shaft misalignments relative to the housing

Drawn cup needle roller bearings are not suitable for the compensation of angular misalignments. The extent to which a misalignment of the shaft can be tolerated relative to the housing bore is dependent on factors such as the design of the bearing position, the size of the bearing, the operating clearance and the load. For this reason, it is not possible to give a guide value for misalignment.

In all cases, misalignments cause increased running noise, place increased strain on the cages and have a harmful influence on the operating life of the bearings.

1.4 Lubrication

Greased bearings

Sealed bearings are greased with a lithium complex soap grease to GA08. The grease filling is measured so that it is sufficient for the entire operating life of the bearing. As a result, the bearings are maintenance-free.

Greased bearings should not be washed out or heated to temperatures of > +80 °C prior to mounting.

Ungreased bearings

Ungreased bearings must be lubricated with oil or grease. The majority of single row bearings do not have a lubrication hole.

Compatibility with plastic cages

When using bearings with plastic cages, compatibility between the lubricant and the cage material must be ensured if synthetic oils, lubricating greases with a synthetic oil base or lubricants containing a high proportion of EP additives are used.

Observe oil change intervals

Aged oil and additives in the oil can impair the operating life of plastics at high temperatures. As a result, stipulated oil change intervals must be strictly observed.

Lubrication of full complement drawn cup needle roller bearings with open ends

The needle rollers are retained by a special grease

Since the needle rollers in full complement bearings are not retained by mechanical means (no cage is present), they are retained for transport and fitting by means of a special grease (DIN 51825-K1/2K-30). However, this grease does not have an adequate long term lubrication capacity. Relubrication is therefore recommended after fitting.

If there is any uncertainty regarding relubrication, please consult Schaeffler.

Bearings of special design

The following special designs are available by agreement:

- unsealed bearings, greased using a lithium complex soap grease to GA08 (suffix GA08)
- bearings with a lubrication hole for sizes from HK0609 (suffix AS1)

1.5 Sealing

The bearings are open or sealed

Drawn cup needle roller bearings are available in an open design in accordance with DIN 618:2008 (ISO 3245:2015) and a sealed design in accordance with DIN 618:2008.

Sealed bearings

Integrated seals are particularly space-saving

Under normal operating conditions, contact seals give protection against contamination, spray water and the loss of lubricant. The integration of such seals into the bearing provides a compact, reliable, proven and economical sealing solution.

Unsealed bearings

Provide seals in the adjacent construction

In the case of unsealed bearings, sealing of the bearing position must be carried out in the adjacent construction. This must reliably prevent:

- moisture and contaminants from entering the bearing
- the egress of lubricant from the bearing

Sealing of the bearing position with sealing rings G or SD

✎ *Effective sealing elements for use in sealing open bearings*

Bearing positions with open drawn cup needle roller bearings can be sealed economically using sealing rings G or SD. The sealing rings are designed as contact seals and are arranged in front of the bearing ➤*853*|⧉ *2*, ➤*857*|⧉ *8*. They are suitable for circumferential velocities at the running surface of up to 10 m/s and protect the bearing position reliably against contamination, spray water and excessive loss of lubricant. The sealing rings are matched to the low radial dimensions of drawn cup needle roller bearings with open ends. They are very easy to fit, since they are simply pressed into the housing bore.

⧉ ***8***
Sealing of the bearing position with sealing rings G or SD

① *Drawn cup needle roller bearing with open ends, open version*
② *Sealing ring G*
③ *Sealing ring SD*

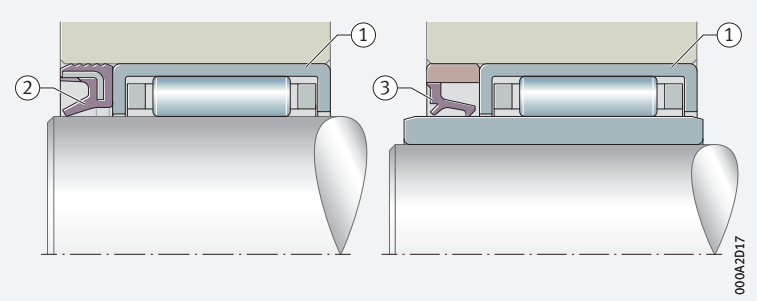

1.6 Speeds

✎ *Speeds in the product tables*

The product tables generally give two speeds for the bearings:
- the kinematic limiting speed n_G
- the thermal speed rating $n_{\vartheta r}$

Limiting speeds

The limiting speed n_G is the kinematically permissible speed of the bearing. Even under favourable mounting and operating conditions, this value should not be exceeded without prior consultation with Schaeffler ➤*64*.

The values in the product tables are valid for oil lubrication.

✎ *Values for grease lubrication*

For the grease lubrication of open cage bearings, 60% of the value stated in the product tables is permissible in each case.

✎ *Speeds for full complement bearings*

Due to the bearing kinematics and higher temperatures within the bearing, the speeds for full complement bearings are lower than for bearings with a cage.

Reference speeds

✎ $n_{\vartheta r}$ *is used to calculate* n_{ϑ}

The thermal speed rating $n_{\vartheta r}$ is not an application-oriented speed limit, but is a calculated ancillary value for determining the thermally safe operating speed n_{ϑ} ➤*64*.

✎ *Bearings with contact seals*

For bearings with contact seals, no reference speeds are defined in accordance with DIN ISO 15312:2004. As a result, only the limiting speed n_G is given in the product tables for these bearings.

1.7 Noise

Schaeffler Noise Index

The Schaeffler Noise Index (SGI) is not yet available for this bearing type ➤*69*. The data for these bearing series will be introduced and updated in stages.

Further information:
- ***medias*** *https://medias.schaeffler.com*

1.8 Temperature range

✎ *Limiting values*

The operating temperature of the bearings is limited by:

- the dimensional stability of the bearing rings and rolling elements
- the cage
- the lubricant
- the seals

Possible operating temperatures of drawn cup needle roller bearings ➤*858*|▦ *1*.

▦ **1** *Permissible temperature ranges*

Operating temperature	Open drawn cup needle roller bearings		Sealed drawn cup needle roller bearings
	with sheet steel cage or full complement	with polyamide cage PA66	
	–30 °C to +140 °C	–30 °C to +120 °C	–20 °C to +100 °C, limited by the lubricant and seal material



In the event of anticipated temperatures which lie outside the stated values, please contact Schaeffler.

1.9 Cages

✎ *Sheet steel cages are used as standard*

With only a few exceptions, the cages are made from sheet steel. Bearings with a plastic cage have the suffix TV. Other cage designs are available by agreement. With such cages, however, suitability for high speeds and temperatures as well as the basic load ratings may differ from the values for the bearings with standard cages.



For high continuous temperatures and applications with difficult operating conditions, bearings with sheet steel cages should be used. If there is any uncertainty regarding cage suitability, please consult Schaeffler.

1.10 Internal clearance

✎ *The enveloping circle diameter F_w applies instead of the radial internal clearance*

In the case of bearings without an inner ring, the dimension for the inner enveloping circle diameter F_w is used instead of the radial internal clearance. The enveloping circle is the inner inscribed circle of the needle rollers in clearance-free contact with the outer raceway. Once the bearings are mounted, the inner enveloping circle diameter F_w is approximately in tolerance class F8. The precondition for this is that the bore tolerances are observed for bearings without an inner ring ➤*861*|*1.16*, ➤*862*|▦ *6* and ➤*861*|▦ *4*.

Checking the enveloping circle diameter F_w

✎ *F_w can only be checked in a mounted condition*

In the case of drawn cup needle roller bearings, the inner enveloping circle diameter F_w can only be checked once the bearings are mounted. In order to carry out the check, the bearing is pressed into a steel ring gauge, which has a cylindrical bore with the nominal dimension D and lower deviation of tolerance class N6 (in accordance with ISO 286-2). The ring gauge must have a minimum wall thickness of 20 mm, the minimum width must correspond to the width of the bearing. A plug gauge to ISO 1132-2 is used for checking purposes. The tolerance class of the enveloping circle is within the range of values defined in the table ➤*859*|▦ *2*.

Example

Example of checking of F_w

For drawn cup needle roller bearing with open ends HK1010 (F_w = 10 mm), F_w must be between 10,013 mm and 10,031 mm (lower deviation = +13 µm, upper deviation = +31 µm), the ring gauge bore must be 13,980 mm ➤*859*|▦ *2*.

Bearings intended for enveloping circle measurements should not be repeatedly pushed in and out of the gauge. Bearings that have been checked in the ring gauge should not be used again.

▦ **2**
Ring gauge bore and enveloping circle deviations (to DIN 618:2008)

Enveloping circle F_w mm	Outside diameter D mm	Ring gauge bore mm	Enveloping circle deviation Upper µm	Lower µm
2	4,6	4,587	+24	+6
3	6,5	6,484	+24	+6
4	8	7,984	+28	+10
5	9	8,984	+28	+10
6	10	9,984	+28	+10
7	11	10,980	+31	+13
8	12	11,980	+31	+13
9	13	12,980	+31	+13
10	14	13,980	+31	+13
12	16	15,980	+34	+16
12	18	17,980	+34	+16
13	19	18,976	+34	+16
14	20	19,976	+34	+16
15	21	20,976	+34	+16
16	22	21,976	+34	+16
17	23	22,976	+34	+16
18	24	23,976	+34	+16
20	26	25,976	+41	+20
22	28	27,976	+41	+20
25	32	31,972	+41	+20
28	35	34,972	+41	+20
30	37	36,972	+41	+20
32	39	38,972	+50	+25
35	42	41,972	+50	+25
40	47	46,972	+50	+25
45	52	51,967	+50	+25
50	58	57,967	+50	+25
55	63	62,967	+60	+30
60	68	67,967	+60	+30

1.11 Dimensions, tolerances

Dimension standards

DIN ISO

The main dimensions of the bearings correspond to DIN 618:2008 and ISO 3245:2015, where standardised. Nominal dimensions of bearings ➤*866*|▦.

Tolerances

DIN ISO

The tolerances correspond to DIN 618:2008 (ISO 3245:2015), where standardised. The inner enveloping circle diameter F_w is approximately in tolerance class F8 ➤*858*|*1.10*.

1.12 Suffixes

Suffixes describe the design and features of a bearing in more detail.

3 *Suffixes and corresponding descriptions*

Suffix	Description of suffix	
AS1	With lubrication hole from HK0609	Special design, available by agreement
GA08	Unsealed, greased bearings for operating temperatures from –20 °C to +140 °C	
RS	Contact seal on one side	Standard
TV	Cage made from glass fibre reinforced polyamide PA66	
ZW	Double row design, with lubrication hole	
2RS	Contact seal on both sides	

1.13 Structure of bearing designation

With ***medias*** interchange, equivalent Schaeffler bearing designations can be determined for bearing designations from other rolling bearing manufacturers *https://www.schaeffler.de/std/1B69*.

The designation of bearings follows a set model.
The composition of designations is subject to DIN 623-1 ➤*102*|*10*.

9 *Drawn cup needle roller bearing with closed end, open version: designation structure*

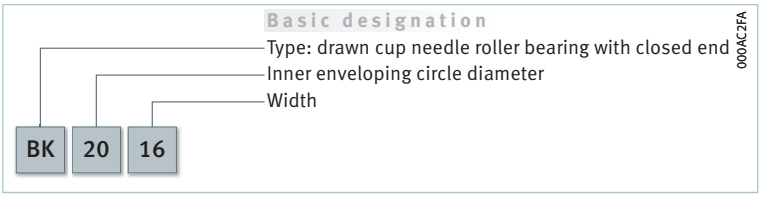

10 *Drawn cup needle roller bearing with open ends, sealed on both sides: designation structure*

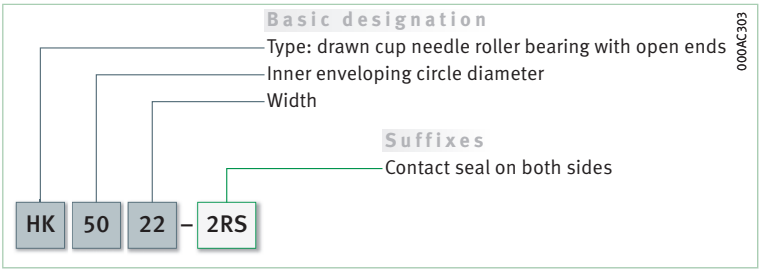

1.14 Dimensioning

Equivalent dynamic bearing load

✎ *$P = F_r$ under purely radial load of constant magnitude and direction*

The basic rating life equation $L = (C_r/P)^p$ used in the dimensioning of bearings under dynamic load assumes a load of constant magnitude and direction. In radial bearings, this is a purely radial load F_r ➤*855*|*1.2*. The bearing load F_r is therefore used in the rating life equation for P ($P = F_r$) ➤*860*|*1*.

1 *Equivalent dynamic load*

$$P = F_r$$

Legend

P	N	Equivalent dynamic bearing load
F_r	N	Radial load.

Equivalent static bearing load

For drawn cup needle roller bearings subjected to static load ➤*861*| *f 2*.

f 2
Equivalent static load

$$P_0 = F_{0r}$$

Legend

P_0	N	Equivalent static bearing load
F_{0r}	N	Largest radial load present (maximum load).

Static load safety factor

✎ $S_0 = C_0/P_0$

In addition to the basic rating life L (L_{10h}), it is also always necessary to check the static load safety factor S_0 ➤*861*| *f 3*. For drawn cup needle roller bearings, $S_0 \geqq 3$ is necessary.

f 3
Static load safety factor

$$S_0 = \frac{C_0}{P_0}$$

Legend

S_0	–	Static load safety factor
C_0	N	Basic static load rating
P_0	N	Equivalent static bearing load.

1.15 Minimum load

✎ *In order to prevent damage due to slippage, a minimum radial load of $P > C_{0r}/60$ is required*

In order that no slippage occurs between the contact partners, the drawn cup needle roller bearings must be constantly subjected to a sufficiently high load. Based on experience, a minimum radial load of the order of $P > C_{0r}/60$ is thus necessary. In most cases, however, the radial load is already higher than the requisite minimum load due to the weight of the supported parts and the external forces.

If the minimum radial load is lower than indicated above, please consult Schaeffler.

1.16 Design of bearing arrangements

Radial location of bearings

✎ *Support outer cup/ inner ring over entire circumference and width*

In order to allow full utilisation of the load carrying capacity of the bearings and achieve the requisite rating life, sufficient rigid support must be provided for the thin-walled outer cups in the housing.
Due to the thin-walled outside surface, the bearings only adopt their precise geometry once they have a tight fit. The support for the outer cup in the housing bore can be produced as a cylindrical seating surface.
The seating surfaces for the outer cup and the raceway for the rolling elements or inner ring (if the bearing arrangement is not produced as a direct bearing arrangement) should not be interrupted by grooves, holes or other recesses. The accuracy of the mating parts must meet specific requirements, the bore tolerances for the housing bore (recommended tolerance classes) are dependent on the housing material ➤*861*| ▦ *4*.
If the housings are not rigid, tests must be carried out to determine which shaft tolerance the desired operating clearance will be achieved with. Numerical values for IT grades ➤*862*| ▦ *5*. For the bearings to be mounted without damage, the shaft must have a lead chamfer of 10° to 15°.

▦ *4*
Tolerance classes and surface design for housings, as a function of the material

Housing material	Bore tolerance to ISO 286-2	Roundness tolerance max.	Parallelism tolerance max.	Recommended mean roughness value Ramax (Rzmax) µm
Steel or cast iron	N6 Ⓔ	IT5/2	IT5/2	0,8 (4)
Aluminium (Al)	R6 Ⓔ			
Magnesium (Mg)	S6 Ⓔ			

5
Numerical values for ISO standard tolerances (IT grades) to ISO 286-1:2010

IT grade	Nominal dimension in mm						
	over –	**3**	**6**	**10**	**18**	**30**	**50**
	incl. **3**	**6**	**10**	**18**	**30**	**50**	**80**
	Values in µm						
IT3	2	2,5	2,5	3	4	4	5
IT4	3	4	4	5	6	7	8
IT5	4	5	6	8	9	11	13

Axial location of bearings

✎ A tight fit is usually sufficient for axial location

If axial locating elements such as shoulders and snap rings are not used, the housing bore can be produced easily and particularly economically. This also gives simplified mounting of the bearings.

Raceway for bearing arrangements without an inner ring (direct bearing arrangement)

✎ Produce the raceway as a rolling bearing raceway

Where drawn cup needle roller bearings run directly on the shaft (without an inner ring), the raceway for the rolling elements must be produced as a rolling bearing raceway (hardened and ground). Design of raceways ➤*862* | 6. The values in the table refer to commonly encountered application examples. If the shaft cannot be produced as a raceway, the bearings can be combined with Schaeffler bearing rings. However, the section height of the bearings will then be increased by the thickness of the rings.

6
Tolerance class and surface design for the shaft (direct bearing arrangement)

Shaft tolerance to ISO 286-2	Roundness tolerance max.	Parallelism tolerance max.	Recommended mean roughness value Ramax (Rzmax) µm
h6 Ⓔ	IT3	IT3	0,2 (1)

Steels for the raceway (direct bearing arrangement)

Through hardening steels

Through hardening steels in accordance with ISO 683-17 (e.g. 100Cr6) are suitable as materials for rolling bearing raceways in direct bearing arrangements. These steels can also be surface layer hardened.

Case hardening steels

Case hardening steels must correspond to DIN EN ISO 683-17 (such as 17MnCr5, 18CrNiMo7-6) or DIN EN ISO 683-3 (such as 16MnCr5).

Steels for inductive surface layer hardening

For flame and induction hardening, steels in accordance with DIN EN ISO 683-17 (e.g. C56E2, 43CrMo4) or DIN 17212 (e.g. Cf53) should be used.

Surface hardness and hardening depth

✎ Nominal surface hardness: ≧ 670 HV

The requisite minimum surface hardness of 670 HV is valid for raceways, axial washers and shaft shoulders. Steels hardened by means of case, flame or induction hardening must have a surface hardness of 670 HV to 840 HV and an adequate hardening depth CHD or SHD.

Raceway hardness of less than 670 HV

If the raceway fulfils the requirements for rolling bearing materials but the raceway hardness is less than 670 HV (58 HRC), the static and dynamic load carrying capacity of the bearing is reduced. In order to determine the dynamic and static load carrying capacity of the bearing arrangement, the basic dynamic load rating C of the bearings must be multiplied by the reduction factor f_H (dynamic hardness factor) and the basic static load rating C_{0r} by the reduction factor f_{H0} (static hardness factor).

11
Dynamic hardness factor for raceway hardness values of less than 670 HV

f_H = *dynamic hardness factor*
HV, HRC = *surface hardness*

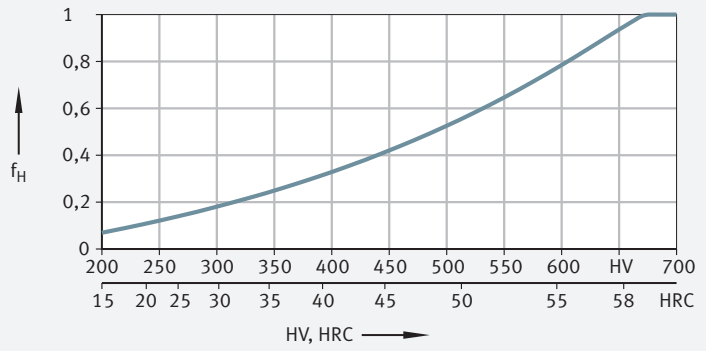

12
Static hardness factor for raceway hardness values of less than 670 HV

f_{H0} = *static hardness factor*
HV, HRC = *surface hardness*

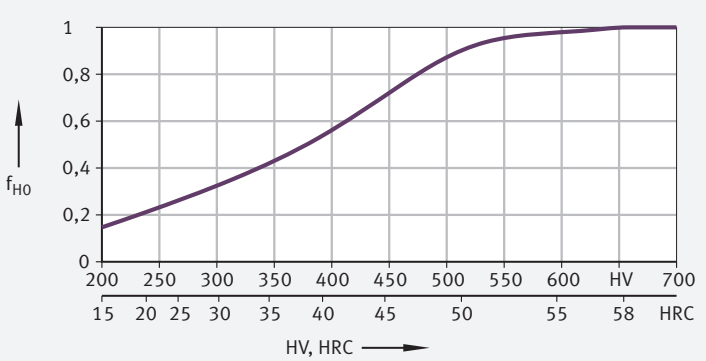

Determining the case hardening depth

Approximation value for case hardening depth

The reference value for the load present is the equivalent stress in accordance with the distortion energy hypothesis (DEH) as a function of the rolling element diameter D_w and the magnitude of the load.

For calculation of the case hardening depth CHD, the following applies:

4
Case hardening depth

$$CHD \geqq 0{,}052 \cdot D_w$$

Legend

CHD	mm	Case hardening depth
D_w	mm	Rolling element diameter.

The local hardness must always be above the local requisite hardness, which can be calculated from the equivalent stress.

Determining the surface hardening depth

In these surface hardening methods, the load and contact geometry must be taken into consideration when determining the requisite hardening depth.

For the calculation of the surface hardening depth SHD applies:

5
Surface hardening depth

$$SHD \geqq 140 \cdot D_w / R_{p0,2}$$

Legend

SHD	mm	Surface hardening depth
D_w	mm	Rolling element diameter
$R_{p0,2}$	N/mm²	Yield point of base material.

1.17 Mounting and dismounting

Ensure that the bearings are not damaged during mounting

The bearings are self-retaining (not separable). They are mounted using a special fitting mandrel ➤*864*| *13*. The shoulder of the fitting mandrel must rest against the marked end face (designation) of the bearing.
A toroidal ring should be used to retain the bearing. The length and oversize of the ring must be matched by the customer to the dimensions and mass of the bearing. The press-in forces occurring during mounting are dependent on several factors. Mounting must be carried out so that the bearing rib on the end face is not deformed. If the application requires a mounting procedure different from the one described, mounting trials must be carried out in order to ensure that the bearings can be mounted correctly and without causing damage.

Drawn cup needle roller bearings must not be tilted during pressing-in, as this may damage the bearing. If grease lubrication is to be used, the bearings should be lubricated with grease before mounting.

13
Mounting of a drawn cup needle roller bearing with open ends using a fitting mandrel: design of the fitting mandrel

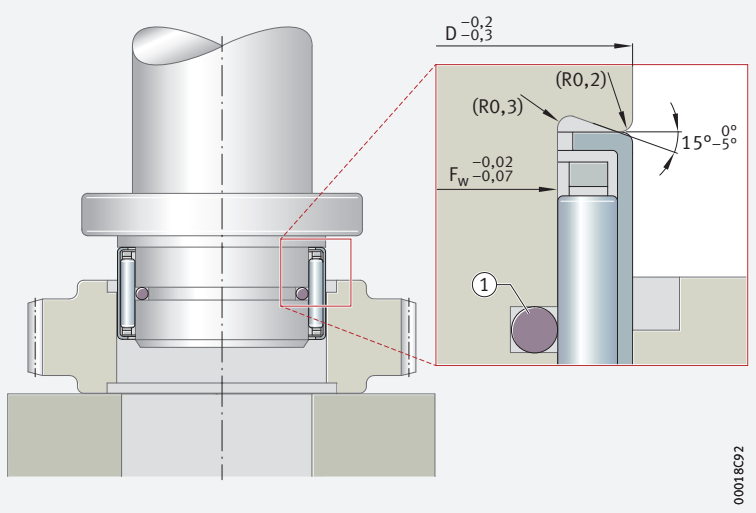

General tolerances to ISO 2768-1

F_w = *inner enveloping circle diameter*
D = *bearing outside diameter*
R = *radii of fitting mandrel*

① *Toroidal ring*

Schaeffler Mounting Handbook

Rolling bearings must be handled with great care

Rolling bearings are well-proven precision machine elements for the design of economical and reliable bearing arrangements, which offer high operational security. In order that these products can function correctly and achieve the envisaged operating life without detrimental effect, they must be handled with care.

The Schaeffler Mounting Handbook MH 1 gives comprehensive information about the correct storage, mounting, dismounting and maintenance of rotary rolling bearings *https://www.schaeffler.de/std/1D53*.
It also provides information which should be observed by the designer, in relation to the mounting, dismounting and maintenance of bearings, in the original design of the bearing position. This book is available from Schaeffler on request.

1.18 Legal notice regarding data freshness

✎ The further development of products may also result in technical changes to catalogue products

Of central interest to Schaeffler is the further development and optimisation of its products and the satisfaction of its customers. In order that you, as the customer, can keep yourself optimally informed about the progress that is being made here and with regard to the current technical status of the products, we publish any product changes which differ from the printed version in our electronic product catalogue.

§ We therefore reserve the right to make changes to the data and illustrations in this catalogue. This catalogue reflects the status at the time of printing. More recent publications released by us (as printed or digital media) will automatically precede this catalogue if they involve the same subject. Therefore, please always use our electronic product catalogue to check whether more up-to-date information or modification notices exist for your desired product.

Link to electronic product catalogue

The following link will take you to the Schaeffler electronic product catalogue: *https://medias.schaeffler.com*.

1.19 Further information

In addition to the data in this chapter, the following chapters in Technical principles must also be observed in the design of bearing arrangements:

- Determining the bearing size ➤*34*
- Rigidity ➤*54*
- Friction and increases in temperature ➤*56*
- Speeds ➤*64*
- Bearing data ➤*97*
- Lubrication ➤*70*
- Sealing ➤*185*
- Design of bearing arrangements ➤*141*
- Mounting and dismounting ➤*194*

Drawn cup needle roller bearings with open ends

Drawn cup needle roller bearings with closed end

Unsealed

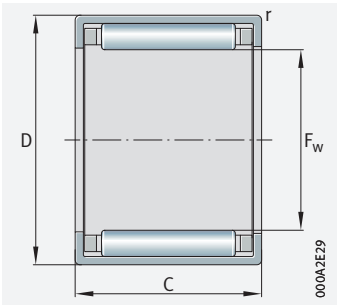

HK

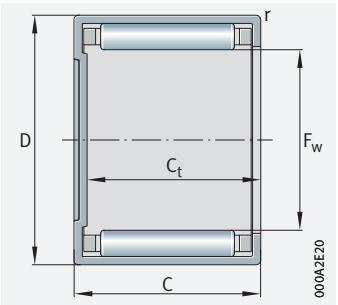

BK

F_w = 2 – 16 mm

Main dimensions			Basic load ratings		Fatigue limit load	Limiting speed	Speed rating	Drawn cup needle roller bearings with open ends		Drawn cup needle roller bearings with closed end	
F_w	D	C	dyn. C_r	stat. C_{0r}	C_{ur}	n_G	$n_{\vartheta r}$	Mass m	Designation ➤860|1.12 ➤860|1.13	Mass m	Designation ➤860|1.12 ➤860|1.13
		–0,3	N	N	N	min^{-1}	min^{-1}	≈ g		≈ g	
2	4,6	5	465	265	45,5	58 000	93 000	0,3	**HK0205-TV**[1]	–	–
3	6,5	6	1 230	840	145	48 000	57 000	1	**HK0306-TV**[1]	1	**BK0306-TV**[1]
4	8	8	1 780	1 310	147	42 500	44 500	1,5	**HK0408**[1]	1,6	**BK0408**[1]
5	9	9	2 400	1 990	243	39 000	36 500	2	**HK0509**[1]	2,1	**BK0509**[1]
6	10	6	1 610	1 220	212	36 500	31 500	1,5	**HK0606**[1]	–	–
	10	8	2 030	1 650	187	36 500	31 500	2,1	**HK0608**[1]	–	–
	10	9	2 850	2 600	320	36 500	30 500	2,5	**HK0609**	2,6	**BK0609**
7	11	9	3 100	2 950	360	33 000	26 500	2,6	**HK0709**	2,9	**BK0709**
8	12	8	2 750	2 600	300	29 500	23 800	2,7	**HK0808**	3	**BK0808**
	12	10	3 800	3 950	510	29 500	23 200	3	**HK0810**	3,4	**BK0810**
9	13	8	3 550	3 750	450	26 500	20 600	3	**HK0908**	–	–
	13	10	4 250	4 650	610	26 500	20 600	4	**HK0910**	4,3	**BK0910**
	13	12	5 300	6 300	870	26 500	20 200	4,6	**HK0912**	4,9	**BK0912**
10	14	10	4 400	5 100	670	24 300	18 700	4,1	**HK1010**	4,3	**BK1010**
	14	12	5 500	6 800	950	24 300	18 400	4,8	**HK1012**	5	**BK1012**
	14	15	6 800	8 800	1 230	24 300	18 200	6	**HK1015**	6,2	**BK1015**
12	16	10	4 950	6 200	820	20 700	15 700	4,6	**HK1210**	5,2	**BK1210**
	18	12	6 500	7 300	880	20 000	15 500	9	**HK1212**	10	**BK1212**
	18	16	9 300	11 500	1 450	20 000	15 100	13	**HK1216**	–	–
13	19	12	6 800	7 900	960	18 700	14 400	10	**HK1312**	11	**BK1312**
14	20	12	7 100	8 500	1 030	17 500	13 500	10,5	**HK1412**	12	**BK1412**
15	21	12	7 900	9 400	1 170	16 300	12 300	11	**HK1512**	13	**BK1512**
	21	16	10 500	14 400	1 810	16 500	12 300	15	**HK1516**	17	**BK1516**
	21	22	13 400	19 500	2 420	16 500	12 300	20	**HK1522-ZW**	–	–
16	22	12	7 600	9 700	1 180	15 600	11 900	12	**HK1612**	14	**BK1612**
	22	16	10 900	15 300	1 940	15 600	11 600	16	**HK1616**	18	**BK1616**
	22	22	13 100	19 400	2 360	15 600	11 700	22	**HK1622-ZW**	24	**BK1622-ZW**

medias *https://www.schaeffler.de/std/1F9A*

[1] Not available with lubrication hole.

[2] For unsealed drawn cup needle roller bearings, dimensionally matched sealing rings of series G or SD can be used to provide protection against contamination.

Dimensions			Suitable inner rings		Suitable sealing rings[2]	
F_w	C_t min.	r min.	LR designation	IR designation		
2	–	0,3	–	–	–	–
3	5,2	0,3	–	–	–	–
4	6,4	0,3	–	–	**GR4×8×2**	–
5	7,4	0,4	–	–	**GR5×9×2**	–
6	–	0,4	–	–	**GR6×10×2**	–
	–	0,4	–	–	**GR6×10×2**	–
	7,4	0,4	–	–	**GR6×10×2**	–
7	7,4	0,4	–	–	**GR7×11×2**	–
8	6,4	0,4	–	–	–	**G8×12×3**
	8,4	0,4	–	**IR5×8×12-XL**	–	**G8×12×3**
9	–	0,4	–	–	**GR9×13×3**	**G9×13×3**
	8,4	0,4	–	–	**GR9×13×3**	**G9×13×3**
	10,4	0,4	–	**IR6×9×12-XL**	**GR9×13×3**	**G9×13×3**
10	8,4	0,4	**LR7×10×10,5**	**IR7×10×10,5-XL**	**GR10×14×3**	**G10×14×3**
	10,4	0,4	–	**IR7×10×12-XL**	**GR10×14×3**	**G10×14×3**
	13,4	0,4	–	**IR7×10×16-XL**	**GR10×14×3**	**G10×14×3**
12	8,4	0,4	**LR8×12×10,5**	**IR8×12×10,5-XL**	**SD12×18×3**	**G12×18×3**
	9,3	0,8	**LR8×12×12,5**	**IR8×12×12,5-XL**	**SD12×18×3**	**G12×18×3**
	–	0,8	–	**IR9×12×16-XL**	**SD12×18×3**	**G12×18×3**
13	9,3	0,8	**LR10×13×12,5**	**IR10×13×12,5-XL**	–	**G13×19×3**
14	9,3	0,8	–	**IR10×14×13-XL**	**SD14×20×3**	**G14×20×3**
15	9,3	0,8	**LR12×15×12,5**	**IR12×15×12-XL**	**SD15×21×3**	**G15×21×3**
	13,3	0,8	**LR12×15×16,5**	**IR12×15×16-XL**	**SD15×21×3**	**G15×21×3**
	–	0,8	**LR12×15×22,5**	**IR12×15×22,5-XL**	**SD15×21×3**	**G15×21×3**
16	9,3	0,8	–	**IR12×16×13-XL**	**SD16×22×3**	**G16×22×3**
	13,3	0,8	–	**IR12×16×16-XL**	**SD16×22×3**	**G16×22×3**
	19,3	0,8	–	**IR12×16×22-XL**	**SD16×22×3**	**G16×22×3**



Drawn cup needle roller bearings with open ends

Drawn cup needle roller bearings with closed end

Unsealed

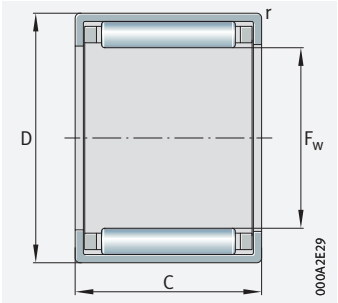

HK

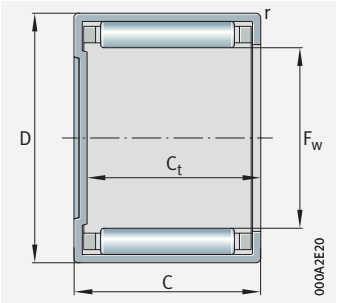

BK with $F_w < 25$ mm

F_w = 17 – 30 mm

Main dimensions			Basic load ratings		Fatigue limit load	Limiting speed	Speed rating	Drawn cup needle roller bearings with open ends		Drawn cup needle roller bearings with closed end	
F_w	D	C	dyn. C_r	stat. C_{0r}	C_{ur}	n_G	$n_{\vartheta r}$	Mass m	Designation ➤860|1.12 ➤860|1.13	Mass m	Designation ➤860|1.12 ➤860|1.13
		–0,3	N	N	N	min^{-1}	min^{-1}	≈ g		≈ g	
17	23	12	7 900	10 300	1 260	14 700	11 200	12	**HK1712**	–	–
18	24	12	8 100	10 900	1 330	14 000	10 700	13	**HK1812**	15	**BK1812**
	24	16	11 600	17 300	2 180	14 000	10 400	18	**HK1816**	20	**BK1816**
20	26	10	6 400	8 200	1 060	12 700	10 000	12	**HK2010**	–	–
	26	12	8 600	12 100	1 480	12 700	9 700	14	**HK2012**	–	–
	26	16	12 700	20 100	2 550	12 700	9 300	19	**HK2016**	22	**BK2016**
	26	20	15 700	26 000	3 600	12 700	9 300	24	**HK2020**	27	**BK2020**
	26	30	21 800	40 000	5 100	12 700	9 200	35	**HK2030-ZW**	–	–
22	28	10	7 500	10 500	1 390	11 700	9 000	13	**HK2210**	–	–
	28	12	9 100	13 400	1 630	11 700	8 900	15	**HK2212**	18	**BK2212**
	28	16	13 400	22 100	2 850	11 700	8 500	21	**HK2216**	24	**BK2216**
	28	20	16 500	29 000	3 950	11 700	8 500	26	**HK2220**	–	–
25	32	12	11 000	15 200	2 030	10 200	7 800	20	**HK2512**	–	–
	32	16	15 600	24 000	3 200	10 200	7 500	27	**HK2516**	32	**BK2516**
	32	20	19 900	33 000	4 300	10 200	7 400	33	**HK2520**	38	**BK2520**
	32	26	25 500	45 000	6 300	10 200	7 300	44	**HK2526**	48	**BK2526**
	32	38	34 000	66 000	8 600	10 200	7 300	64	**HK2538-ZW**	68	**BK2538-ZW**
28	35	16	16 400	26 500	3 500	9 200	6 800	29	**HK2816**	–	–
	35	20	20 900	36 000	4 700	9 200	6 700	36	**HK2820**	–	–
30	37	12	12 100	18 200	2 440	8 600	6 600	23	**HK3012**	28	**BK3012**
	37	16	17 200	29 000	3 850	8 600	6 400	31	**HK3016**	38	**BK3016**
	37	20	22 000	39 500	5 100	8 600	6 300	39	**HK3020**	47	**BK3020**
	37	22	24 800	46 000	6 200	8 600	6 200	42	**HK3022**	–	–
	37	26	28 000	54 000	7 600	8 600	6 200	51	**HK3026**	58	**BK3026**
	37	38	37 500	79 000	10 300	8 600	6 200	76	**HK3038-ZW**	84	**BK3038-ZW**

medias *https://www.schaeffler.de/std/1F9A*

[1] For unsealed drawn cup needle roller bearings, dimensionally matched sealing rings of series G or SD can be used to provide protection against contamination.

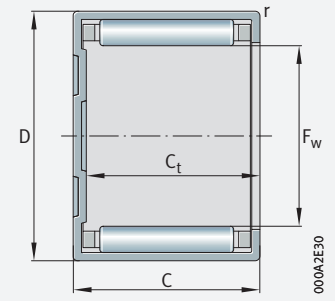

BK with $F_w \geqq 25$ mm

Dimensions			Suitable inner rings		Suitable sealing rings[1)]	
F_w	C_t min.	r min.	LR designation	IR designation		
17	–	0,8	–	–	**SD17×23×3**	**G17×23×3**
18	9,3	0,8	**LR15×18×12,5**	–	**SD18×24×3**	**G18×24×3**
	13,3	0,8	**LR15×18×16,5**	**IR15×18×16-XL**	**SD18×24×3**	**G18×24×3**
20	–	0,8	–	–	**SD20×26×4**	**G20×26×4**
	–	0,8	–	**IR15×20×13-XL**	**SD20×26×4**	**G20×26×4**
	13,3	0,8	**LR17×20×16,5**	**IR17×20×16-XL**	**SD20×26×4**	**G20×26×4**
	17,3	0,8	**LR17×20×20,5**	**IR17×20×20-XL**	**SD20×26×4**	**G20×26×4**
	–	0,8	**LR17×20×30,5**	**IR17×20×30,5-XL**	**SD20×26×4**	**G20×26×4**
22	–	0,8	–	–	**SD22×28×4**	**G22×28×4**
	9,3	0,8	–	**IR17×22×13-XL**	**SD22×28×4**	**G22×28×4**
	13,3	0,8	–	**IR17×22×16-XL**	**SD22×28×4**	**G22×28×4**
	–	0,8	–	**IR17×22×23-XL**	**SD22×28×4**	**G22×28×4**
25	–	0,8	**LR20×25×12,5**	–	**SD25×32×4**	**G25×32×4**
	13,3	0,8	**LR20×25×16,5**	**IR20×25×17-XL**	**SD25×32×4**	**G25×32×4**
	17,3	0,8	**LR20×25×20,5**	**IR20×25×20-XL**	**SD25×32×4**	**G25×32×4**
	23,3	0,8	**LR20×25×26,5**	**IR20×25×26,5-XL**	**SD25×32×4**	**G25×32×4**
	35,3	0,8	**LR20×25×38,5**	**IR20×25×38,5-XL**	**SD25×32×4**	**G25×32×4**
28	–	0,8	–	**IR22×28×17-XL**	**SD28×35×4**	**G28×35×4**
	–	0,8	**LR22×28×20,5**	**IR22×28×20-XL**	**SD28×35×4**	**G28×35×4**
30	9,3	0,8	**LR25×30×12,5**	–	**SD30×37×4**	**G30×37×4**
	13,3	0,8	**LR25×30×16,5**	**IR25×30×17-XL**	**SD30×37×4**	**G30×37×4**
	17,3	0,8	**LR25×30×20,5**	**IR25×30×20-XL**	**SD30×37×4**	**G30×37×4**
	–	0,8	–	–	**SD30×37×4**	**G30×37×4**
	23,3	0,8	**LR25×30×26,5**	**IR25×30×26,5-XL**	**SD30×37×4**	**G30×37×4**
	35,3	0,8	**LR25×30×38,5**	**IR25×30×38,5-XL**	**SD30×37×4**	**G30×37×4**

Drawn cup needle roller bearings with open ends

Drawn cup needle roller bearings with closed end

Unsealed

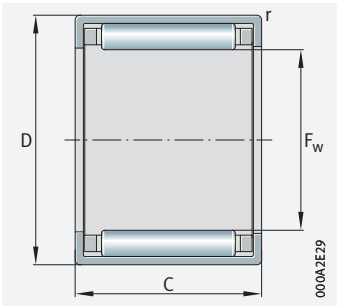

HK

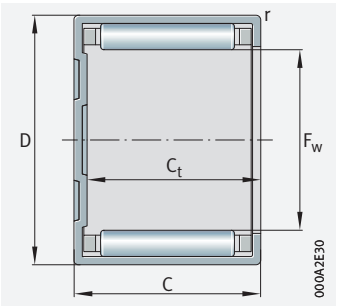

BK

F_w = 32 – 60 mm

Main dimensions			Basic load ratings		Fatigue limit load	Limiting speed	Speed rating	Drawn cup needle roller bearings with open ends		Drawn cup needle roller bearings with closed end	
F_w	D	C	dyn. C_r	stat. C_{0r}	C_{ur}	n_G	$n_{\vartheta r}$	Mass m	Designation ➤*860|1.12* ➤*860|1.13*	Mass m	Designation ➤*860|1.12* ➤*860|1.13*
		–0,3	N	N	N	min^{-1}	min^{-1}	≈ g		≈ g	
32	39	20	23 000	42 500	5 600	8 100	5 900	40,6	**HK3220**	–	–
	39	24	27 500	54 000	7 500	8 100	5 900	49	**HK3224**	–	–
35	42	12	13 100	21 300	2 850	7 500	5 800	27	**HK3512**	–	–
	42	16	18 700	33 500	4 450	7 500	5 600	36	**HK3516**	–	–
	42	20	23 800	46 000	6 000	7 500	5 500	44	**HK3520**	53	**BK3520**
40	47	12	14 000	24 300	3 250	6 600	5 200	30	**HK4012**	–	–
	47	16	20 000	38 500	5 100	6 600	5 000	39	**HK4016**	–	–
	47	20	25 500	52 000	6 900	6 600	4 900	54	**HK4020**	62	**BK4020**
45	52	12	14 900	27 500	3 650	5 900	4 650	33	**HK4512**	–	–
	52	16	21 300	43 000	5 800	5 900	4 550	46	**HK4516**	–	–
	52	20	27 000	59 000	7 700	5 900	4 450	56	**HK4520**	72	**BK4520**
50	58	20	31 000	63 000	8 400	5 300	4 050	70	**HK5020**	–	–
	58	25	38 500	84 000	11 900	5 300	4 000	90	**HK5025**	109	**BK5025**
55	63	20	31 500	67 000	8 900	4 850	3 800	74	**HK5520**	–	–
	63	28	44 000	103 000	14 900	4 850	3 700	105	**HK5528**	–	–
60	68	12	17 400	32 000	4 350	4 450	3 750	49	**HK6012**	–	–
	68	20	33 500	75 000	9 900	4 450	3 500	81	**HK6020**	–	–
	68	32	53 000	135 000	20 000	4 450	3 400	136	**HK6032**	–	–

medias *https://www.schaeffler.de/std/1F9A*

[1] For unsealed drawn cup needle roller bearings, dimensionally matched sealing rings of series G or SD can be used to provide protection against contamination.

Dimensions			Suitable inner rings		Suitable sealing rings[1]	
F_w	C_t min.	r min.	LR designation	IR designation		
32	–	0,8	–	**IR28×32×20-XL**	–	–
	–	0,8	–	–	–	–
35	–	0,8	**LR30×35×12,5**	**IR30×35×13-XL**	**SD35×42×4**	**G35×42×4**
	–	0,8	**LR30×35×16,5**	**IR30×35×16-XL**	**SD35×42×4**	**G35×42×4**
	17,3	0,8	**LR30×35×20,5**	**IR30×35×20-XL**	**SD35×42×4**	**G35×42×4**
40	–	0,8	**LR35×40×12,5**	–	**SD40×47×4**	**G40×47×4**
	–	0,8	**LR35×40×16,5**	**IR35×40×17-XL**	**SD40×47×4**	**G40×47×4**
	17,3	0,8	**LR35×40×20,5**	**IR35×40×20-XL**	**SD40×47×4**	**G40×47×4**
45	–	0,8	–	–	**SD45×52×4**	**G45×52×4**
	–	0,8	**LR40×45×16,5**	**IR40×45×17-XL**	**SD45×52×4**	**G45×52×4**
	17,3	0,8	**LR40×45×20,5**	**IR40×45×20-XL**	**SD45×52×4**	**G45×52×4**
50	–	0,8	**LR45×50×20,5**	–	**SD50×58×4**	**G50×58×4**
	22,3	0,8	–	**IR45×50×25-XL**	**SD50×58×4**	**G50×58×4**
55	–	0,8	**LR50×55×20,5**	–	**SD55×63×5**	**G55×63×5**
	–	0,8	–	–	**SD55×63×5**	**G55×63×5**
60	–	0,8	–	–	–	–
	–	0,8	–	–	–	–
	–	0,8	–	–	–	–

Drawn cup needle roller bearings with open ends

Drawn cup needle roller bearings with closed end

Sealed

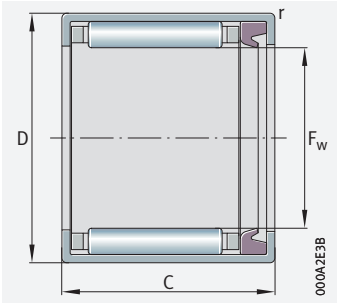

HK..-RS

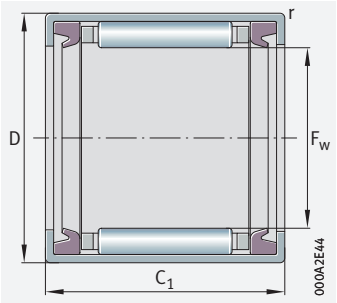

HK..-2RS

F_w = 8 – 50 mm

Main dimensions				Basic load ratings		Fatigue limit load	Limiting speed	Drawn cup needle roller bearings with open ends			
								Sealed on one side		Sealed on both sides	
F_w	D	C 0 −0,3	C_1 0 −0,3	dyn. C_r N	stat. C_{0r} N	C_{ur} N	n_G grease min^{-1}	Mass m ≈ g	Designation ➤*860|1.12* ➤*860|1.13*	Mass m ≈ g	Designation ➤*860|1.12* ➤*860|1.13*
8	12	–	10	2 180	1 930	270	17 700	–	–	3,2	**HK0810-2RS**
	12	10	12	2 750	2 600	300	17 700	3	**HK0810-RS**	3,3	**HK0812-2RS**
	12	12	–	3 800	3 950	510	17 700	3,1	**HK0812-RS**	–	–
10	14	–	10	2 410	2 330	405	14 600	–	–	4	**HK1010-2RS**
	14	12	12	3 200	3 350	385	14 600	–	–	4,3	**HK1012-2RS**
	14	12	14	4 400	5 100	670	14 600	4,2	**HK1012-RS**	4,6	**HK1014-2RS**
12	16	–	14	4 950	6 200	820	12 400	–	–	11	**HK1214-2RS**
	18	14	16	6 500	7 300	880	12 000	10	**HK1214-RS**	11	**HK1216-2RS**
14	20	14	16	7 100	8 500	1 030	10 500	12	**HK1414-RS**	13	**HK1416-2RS**
15	21	14	16	7 800	9 800	1 210	9 900	12	**HK1514-RS**	15	**HK1516-2RS**
	21	18	20	10 500	14 400	1 810	9 900	16	**HK1518-RS**	18	**HK1520-2RS**
16	22	14	16	7 600	9 700	1 180	9 300	13	**HK1614-RS**	14	**HK1616-2RS**
	22	–	20	10 900	15 300	1 940	9 300	–	–	18	**HK1620-2RS**
18	24	14	16	8 100	10 900	1 330	8 400	14	**HK1814-RS**	15	**HK1816-2RS**
20	26	–	16	8 600	12 100	1 480	7 600	–	–	18	**HK2016-2RS**
	26	18	20	12 700	20 100	2 550	7 600	21	**HK2018-RS**	23	**HK2020-2RS**
22	28	14	16	9 100	13 400	1 630	7 000	16	**HK2214-RS**	18	**HK2216-2RS**
	28	18	20	13 400	22 100	2 850	7 000	24	**HK2218-RS**	26	**HK2220-2RS**
25	32	–	16	11 000	15 200	2 030	6 100		–	27	**HK2516-2RS**
	32	18	20	15 600	24 000	3 200	6 100	29	**HK2518-RS**	31	**HK2520-2RS**
	32	–	24	19 900	33 000	4 300	6 100	–	–	40	**HK2524-2RS**
	32	–	30	25 500	45 000	6 300	6 100	–	–	47	**HK2530-2RS**
28	35	18	20	16 400	26 500	3 500	5 500	31	**HK2818-RS**	34	**HK2820-2RS**
30	37	–	16	12 100	18 200	2 440	5 200	–	–	31	**HK3016-2RS**
	37	18	20	17 200	29 000	3 850	5 200	37	**HK3018-RS**	36	**HK3020-2RS**
	37	–	24	22 000	39 500	5 100	5 200	–	–	44	**HK3024-2RS**
35	42	–	16	13 100	21 300	2 850	4 500	–	–	32	**HK3516-2RS**
	42	18	20	18 700	33 500	4 450	4 500	39	**HK3518-RS**	41	**HK3520-2RS**
40	47	–	16	14 000	24 300	3 250	3 950	–	–	37	**HK4016-2RS**
	47	18	20	20 000	38 500	5 100	3 950	45	**HK4018-RS**	48	**HK4020-2RS**
45	52	18	20	21 300	43 000	5 800	3 550	50	**HK4518-RS**	54	**HK4520-2RS**
50	58	22	24	31 000	63 000	8 400	3 150	76	**HK5022-RS**	81	**HK5024-2RS**

medias *https://www.schaeffler.de/std/1F9A*

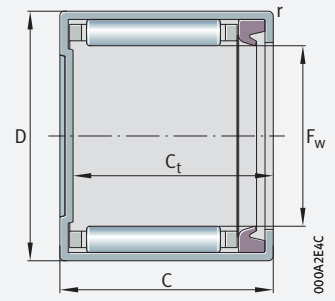

BK..-RS with F_w < 25 mm

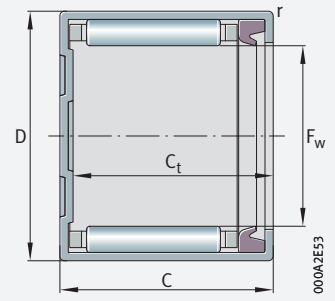

BK..-RS with F_w ≧ 25 mm

	Drawn cup needle roller bearings with closed end Sealed		Dimensions		Suitable inner rings		
					for HK..-RS and HK..-2RS		for BK..-RS
F_w	Mass m ≈ g	Designation ➤*860|1.12* ➤*860|1.13*	C_t min.	r min.	LR Designation	IR Designation	Designation
8	–	–	–	0,4	–	–	–
	–	–	–	0,4	–	**IR5×8×12-XL**	–
	–	–	–	0,4	–	**IR5×8×12-XL**	–
10	–	–	–	0,4	**LR7×10×10,5**	**IR7×10×10,5-XL**	–
	4,3	**BK1012-RS**	10,4	0,4	–	**IR7×10×12-XL**	–
	–	–	–	0,4	–	–	–
12	–	–	–	0,8	–	–	–
	–	–	–	0,8	–	**IR9×12×16-XL**	–
14	13	**BK1414-RS**	11,3	0,8	–	–	–
15	14	**BK1514-RS**	11,3	0,8	**LR12×15×16,5**	**IR12×15×16-XL**	–
	–	–	–	0,8	–	–	–
16	15	**BK1614-RS**	11,3	0,8	–	**IR12×16×16-XL**	**IR12×16×13-XL**
	–	–	–	0,8	–	**IR12×16×20-XL**	–
18	–	–	–	0,8	**LR15×18×16,5**	**IR15×18×16-XL**	–
20	–	–	–	0,8	**LR17×20×16,5**	**IR17×20×16-XL**	–
	24	**BK2018-RS**	15,3	0,8	**LR17×20×20,5**	**IR17×20×20-XL**	–
22	–	–	–	0,8	–	**IR17×22×16-XL**	–
	–	–	–	0,8	–	**IR17×22×23-XL**	–
25	–	–	–	0,8	**LR20×25×16,5**	**IR20×25×17-XL**	–
	34	**BK2518-RS**	15,3	0,8	**LR20×25×20,5**	**IR20×25×20-XL**	**LR20×25×20,5**
	–	–	–	0,8	–	–	–
	–	–	–	0,8	–	**IR20×25×30-XL**	–
28	–	–	–	0,8	**LR22×28×20,5**	**IR22×28×20-XL**	–
30	–	–	–	0,8	**LR25×30×16,5**	**IR25×30×17-XL**	–
	–	–	–	0,8	**LR25×30×20,5**	**IR25×30×20-XL**	–
	–	–	–	0,8	–	–	–
35	–	–	–	0,8	**LR30×35×16,5**	**IR30×35×16-XL**	–
	–	–	–	0,8	**LR30×35×20,5**	**IR30×35×20-XL**	–
40	–	–	–	0,8	**LR35×40×16,5**	**IR35×40×17-XL**	–
	–	–	–	0,8	**LR35×40×20,5**	**IR35×40×20-XL**	–
45	–	–	–	0,8	**LR40×45×20,5**	**IR40×45×20-XL**	–
50	–	–	–	0,8	–	**IR45×50×25-XL**	–

Drawn cup needle roller bearings with open ends

Full complement
Unsealed

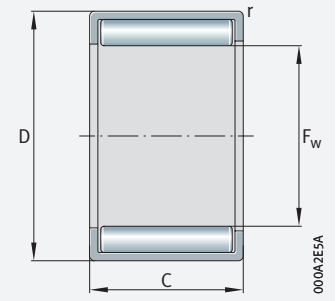

HN

F_w = 8 – 50 mm

Main dimensions			Basic load ratings		Fatigue limit load	Limiting speed	Speed rating	Mass	Designation ➤860|1.12 ➤860|1.13
F_w	D	C	dyn. C_r N	stat. C_{0r} N	C_{ur} N	n_G grease min^{-1}	$n_{\vartheta r}$ min^{-1}	m ≈ g	
8	12	8	5 000	6 700	880	12 700	18 000	3	**HN0808**
12	16	10	8 000	13 400	1 880	8 900	11 900	5,3	**HN1210**
	18	12	10 200	15 200	1 990	8 600	12 000	10,5	**HN1212**
14	20	12	11 000	17 500	2 300	7 500	10 400	12	**HN1412**
15	21	16	15 400	27 500	3 700	7 100	9 600	14	**HN1516**
16	22	12	12 000	20 300	2 650	6 700	9 200	13	**HN1612**
18	24	16	17 000	32 500	4 350	6 000	8 000	20	**HN1816**
20	26	20	22 400	48 000	6 700	5 400	7 200	29,5	**HN2020**
25	32	20	28 000	59 000	8 000	4 350	5 800	39,6	**HN2520**
28	35	20	30 000	67 000	9 100	3 950	5 200	44	**HN2820**
35	42	20	33 500	83 000	11 300	3 200	4 250	54	**HN3520**
40	47	20	36 000	95 000	12 900	2 800	3 750	60,5	**HN4020**
45	52	20	38 500	108 000	14 700	2 500	3 400	66	**HN4520**
	52	25	47 000	139 000	19 900	2 500	3 350	85	**HN4525**
50	58	20	44 500	119 000	16 500	2 260	3 100	85,3	**HN5020**
	58	25	54 000	152 000	22 000	2 260	3 050	107	**HN5025**

medias *https://www.schaeffler.de/std/1F9A*

Dimensions		Suitable inner rings	
F_w	r min.	LR designation	IR designation
8	0,4	–	–
12	0,4	**LR8×12×10,5**	**IR8×12×10,5-XL**
	0,8	**LR8×12×12,5**	**IR8×12×12,5-XL**
14	0,8	–	**IR10×14×13-XL**
15	0,8	**LR12×15×16,5**	**IR12×15×16-XL**
16	0,8	–	**IR12×16×13-XL**
18	0,8	**LR15×18×16,5**	**IR15×18×16-XL**
20	0,8	**LR17×20×20,5**	**IR17×20×20-XL**
25	0,8	**LR20×25×20,5**	**IR20×25×20-XL**
28	0,8	**LR22×28×20,5**	**IR20×28×20-XL**
35	0,8	**LR30×35×20,5**	**IR30×35×20-XL**
40	0,8	**LR35×40×20,5**	**IR32×40×20-XL**
45	0,8	**LR40×45×20,5**	**IR40×45×20-XL**
	0,8	–	–
50	0,8	**LR45×50×20,5**	–
	0,8	**LR45×50×25,5**	**IR45×50×25-XL**

Needle roller bearings



Matrix for bearing preselection *878*

1 Needle roller bearings, aligning needle roller bearings **880**

1.1 Bearing design *880*
1.2 Load carrying capacity *887*
1.3 Compensation of angular misalignments *887*
1.4 Lubrication *888*
1.5 Sealing *888*
1.6 Speeds *889*
1.7 Noise *889*
1.8 Temperature range *890*
1.9 Cages *890*
1.10 Internal clearance *890*
1.11 Dimensions, tolerances *892*
1.12 Suffixes *892*
1.13 Structure of bearing designation *893*
1.14 Dimensioning *894*

1.15 Minimum load 894
1.16 Design of bearing arrangements 894
1.17 Mounting and dismounting 899
1.18 Legal notice regarding data freshness 900
1.19 Further information 900

Product tables 902
Needle roller bearings with ribs 902
Needle roller bearings without ribs 922
Aligning needle roller bearings 928

2 Combined needle roller bearings 930

2.1 Bearing design 930
2.2 Load carrying capacity 934
2.3 Compensation of angular misalignments 937
2.4 Lubrication 937
2.5 Sealing 938
2.6 Speeds 938
2.7 Noise 939
2.8 Temperature range 939
2.9 Cages 939
2.10 Internal clearance 939
2.11 Dimensions, tolerances 940
2.12 Suffixes 941
2.13 Structure of bearing designation 941
2.14 Dimensioning 942
2.15 Minimum load 943
2.16 Design of bearing arrangements 943
2.17 Mounting and dismounting 947
2.18 Legal notice regarding data freshness 948
2.19 Further information 948

Product tables 950
Needle roller/axial deep groove ball bearings 950
Needle roller/axial cylindrical roller bearings 954
Needle roller/angular contact ball bearings 956

3 Inner rings 958

3.1 Product design 958
3.2 Temperature range 960
3.3 Internal clearance 960
3.4 Tolerances 961
3.5 Suffixes 961
3.6 Structure of bearing designation 962
3.7 Design of bearing arrangements 962
3.8 Mounting and dismounting 963
3.9 Legal notice regarding data freshness 963

Product tables 964
Inner rings without lubrication hole 964
Inner rings with lubrication hole 970

Matrix for bearing preselection

The matrix gives an overview of the types and design features.

It can be used to make a preliminary assessment of whether a bearing is fundamentally suitable for the envisaged application.

The additional information provided in the product chapter (see column "detailed information") and in the Technical principles must, however, be observed in addition to this overview in selection of the bearing.

Design features and suitability			Machined needle roller bearings		
+++ extremely suitable ++ highly suitable + suitable (+) suitable with restrictions – not suitable/not applicable ✓ available			with ribs, with or without inner ring	without ribs, with or without inner ring	detailed information ➤ 880
Load carrying capacity	radial	F_r	+++	+++	➤ 887 | 1.2
	axial, one direction	F_a	–	–	➤ 887 | 1.2
	axial, both directions	F_a	–	–	➤ 887 | 1.2
	moments	M	–	–	
Compensation of angular misalignments	static		–	–	➤ 887 | 1.3
	dynamic		–	–	➤ 887 | 1.3
Bearing design	cylindrical bore		✓	✓	➤ 880 | 1.1
	tapered bore		–	–	
	separable		✓[1]	✓	➤ 880 | 1.1
Lubrication	greased		✓[3]	–	➤ 888 | 1.4
Sealing	open		✓	✓	➤ 888 | 1.5
	non-contact		–	–	➤ 888 | 1.5
	contact		✓	–	➤ 888 | 1.5
Operating temperature in °C	from to		–30[6] +120	–30[6] +120	➤ 890 | 1.8
Suitability for	high speeds	n	+++	+++	➤ 889 | 1.6
	high running accuracy		++	++	➤ 892 | 1.11 ➤ 115
	low-noise running		+	+	➤ 889 | 1.7 ➤ 27
	high rigidity		+++	+++	➤ 54
	reduced friction		++	++	➤ 56
	length compensation within bearing		+++	+++	➤ 880 | 1.1 ➤ 25
	non-locating bearing arrangement		+++	+++	➤ 141
	locating bearing arrangement		–	–	➤ 141
X-life bearings		X-life	✓	✓	➤ 886
Inside diameter d and F_w in mm	from to		5 415	5 100	➤ 902
Product tables	from page ➤		902	922	

1) Only the inner rings can be mounted separately
2) Valid for axial component only in bearings without an end cap
3) Sealed bearings only
4) NKX..-Z is greased
5) NKXR..-Z is greased
6) Valid for bearings with sheet steel cage. With plastic cage: –20 °C to +120 °C
7) For mounting in pairs
8) Valid for NKIB only

	Aligning needle roller bearings		Combined needle roller bearings				
	with or without inner ring	detailed information ➤ 880	needle roller/ axial deep groove ball bearings	needle roller/ axial cylindrical roller bearings	needle roller/ angular contact ball bearings	detailed information ➤ 930	
	+++	➤ 887 | 1.2	+++	+++	+++	➤ 934 | 2.2	F_r
	–	➤ 887 | 1.2	++	+++	+	➤ 934 | 2.2	F_a
	–	➤ 887 | 1.2	–	–	++ [8]	➤ 934 | 2.2	F_a
	–		–	–	–		M
	++	➤ 887 | 1.3	–	–	–	➤ 937 | 2.3	
	–	➤ 887 | 1.3	–	–	–	➤ 937 | 2.3	
	✓	➤ 880 | 1.1	✓	✓	✓	➤ 930 | 2.1	
	–		–	–	–		
	✓ [1]	➤ 880 | 1.1	✓ [2]	✓ [2]	✓ [1]	➤ 930 | 2.1	
	–	➤ 888 | 1.4	– [4]	– [5]	–	➤ 937 | 2.4	
	✓	➤ 888 | 1.5	✓	✓	✓	➤ 938 | 2.5	
	–	➤ 888 | 1.5	–	–	–	➤ 938 | 2.5	
	–	➤ 888 | 1.5	–	–	–	➤ 938 | 2.5	
	–20 +100	➤ 890 | 1.8	–30 +120	–30 +120	–30 +120	➤ 939 | 2.8	
	++	➤ 889 | 1.6	+++	++	+++	➤ 938 | 2.6	n
	+	➤ 892 | 1.11 ➤ 115	++	++	++	➤ 940 | 2.11 ➤ 115	
	(+)	➤ 889 | 1.7 ➤ 27	(+)	(+)	(+)	➤ 939 | 2.7 ➤ 27	
	+	➤ 54	+++	+++	+++	➤ 54	
	++	➤ 56	++	++	++	➤ 56	
	+++	➤ 880 | 1.1 ➤ 25	(+)	(+)	(+)	➤ 25	
	+++	➤ 141	–	–	–	➤ 141	
	–	➤ 141	(+) [7]	(+) [7]	+	➤ 141	
	✓	➤ 886	✓	✓	✓	➤ 934	X-life
	12 45	➤ 928	7 70	15 50	12 70	➤ 950	
	928		950	954	956		

1 Needle roller bearings, aligning needle roller bearings

The bearings:

- can support high to very high radial forces
- are used when the load carrying capacity or accuracy of drawn cup needle roller bearings with open ends is no longer sufficient and the high load capacity of cylindrical roller bearings is not yet required
- can only support radial loads and, as a result, are highly suitable for use as non-locating bearings (they permit axial displacement of the shaft relative to the housing in the bearing)
- permit high speeds in spite of line contact
- compensate misalignments between the shaft and housing (aligning needle roller bearings)
- require only a very small radial design envelope, particularly if the bearing arrangement is designed without an inner ring
- are available in numerous sizes and designs
- result in particularly compact, cost-effective and economical bearing arrangements

For an overview of other product-specific features, see the Matrix for bearing preselection ➤*878*.

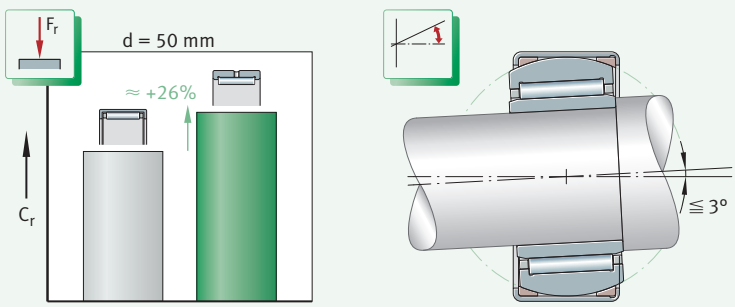

1 *Needle roller bearing in X-life quality: comparison of load carrying capacity with drawn cup needle roller bearing (open ends) of almost identical dimensions; angular adjustment facility of aligning needle roller bearings (permissible adjustment angle)*

C_r = *basic dynamic load rating*

1.1 Bearing design

✎ *Design variants*

Needle roller bearings are available as:

- needle roller bearings with ribs on the outer ring ➤*881*|*2* to ➤*883*|*5*
- needle roller bearings without ribs on the outer ring ➤*884*|*6* and ➤*884*|*7*
- aligning needle roller bearings ➤*885*|*8* and ➤*885*|*9*
- combined needle roller bearings ➤*930*

Needle roller bearings are X-life bearings ➤*886*.
In addition to the bearings described in this chapter, needle roller bearings are also available in other series, designs and sizes, as well as for specific applications, by agreement.

Needle roller bearings

Needle roller bearings are non-locating bearings

Needle roller bearings are rolling bearings with a low radial section height and high load carrying capacity, which are used as non-locating bearings and are part of the group of radial needle roller bearings. These bearings comprise machined outer rings, needle roller and cage assemblies and removable inner rings, i.e. they can be supplied with or without an inner ring in accordance with the application ➤*881*|*2* to ➤*885*|*8*.
In contrast to the outer cups of drawn cup needle roller bearings, which are produced by forming methods, the bearing rings are machined.
Due to their non-locating bearing function, the bearings cannot guide the shaft axially in any direction.

Needle roller bearings with ribs on the outer ring

The needle roller and cage assembly is guided by the ribs

Needle roller bearings with ribs are ready-to-fit units. The outer ring and needle roller and cage assembly form a self-retaining unit. The needle roller and cage assembly is guided by the ribs on the outer ring. The outer ring has a lubrication groove and at least one lubrication hole. There is no relubrication facility in types NK with $F_w \leqq 10$ mm and NKI with $d \leqq 7$ mm.
The bearings are predominantly of a single row design, type RNA69 is of a double row design above an enveloping circle diameter $F_w = 40$ mm and is therefore fitted with two needle roller and cage assemblies.
The bearings are available:

- with or without an inner ring ➤*881*|*2* and ➤*882*|*4*
- in a single or double row design ➤*881*|*2* and ➤*882*|*4*
- as open or sealed versions ➤*882*|*3*, ➤*882*|*4*, ➤*888*|*1.5*

Needle roller bearings with ribs on the outer ring, without inner ring

Available types

Needle roller bearings with ribs on the outer ring and without an inner ring are available in the following types and dimension series:

- NK, NKS, RNA48, RNA49, RNA69 (single row) ➤*881*|*2*
- RNA69..-ZW (double row) ➤*881*|*2*
- RNA49..-RSR, RNA49..-2RSR (sealed on one or both sides) ➤*882*|*3* and ➤*888*|*1.5*

For bearing arrangements with particularly compact radial dimensions

Bearings without an inner ring are highly suitable for bearing arrangements with particularly compact radial dimensions, if the shaft raceway can be hardened and ground ➤*894*|*1.16*. If no inner ring is used, the shaft can be designed to a greater thickness and thus with increased rigidity.

Length compensation (axial displacement facility)

Radial needle roller bearings are used as non-locating bearings, i.e. when the shaft must allow axial length compensation relative to the housing. For bearings without an inner ring, the axial displacement facility of the shaft is dependent on the width of the shaft raceway.

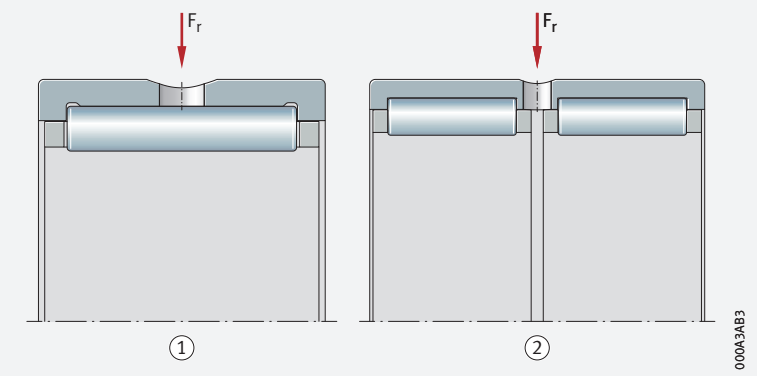

2
Needle roller bearings with ribs on the outer ring, without inner ring, open

F_r = *radial load*

① *Single row needle roller bearing*
② *Double row needle roller bearing*

3
Needle roller bearings with ribs on the outer ring, without inner ring, sealed on one or both sides

F_r = *radial load*

① *Single row needle roller bearing, contact seal on one side*

② *Single row needle roller bearing, contact seal on both sides*

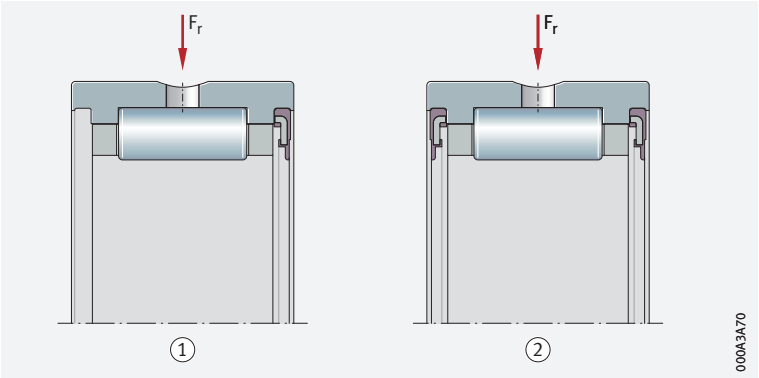

Needle roller bearings with ribs on the outer ring, with inner ring

Available types

Needle roller bearings with ribs on the outer ring and with an inner ring are available in the following types and dimension series:

- NKI, NKIS, NA48, NA49, NA69 (single row) ➤*882*| *4*
- NA69..-ZW (double row) ➤*882*| *4*
- NA49..-RSR, NA49..-2RSR (sealed on one or both sides) ➤*883*| *5* and ➤*888*| *1.5*

Bearings with an inner ring are used if the shaft cannot be configured as a rolling bearing raceway. The bearings are of a single row design, NA69 is of a double row design from d ≧ 32 mm.

Axial displacement of the inner ring

For bearings with an inner ring, the axial displacement of the shaft relative to the housing occurs during rotational motion, without constraint in the bearing, between the needle rollers and the inner ring raceway without ribs. The maximum axial displacement s is given in the product tables. Where larger displacements occur, the standard ring can be replaced by a wider inner ring IR. Inner rings ➤*958*.

Replacement of inner rings

In the case of the standard bearings, the inner rings are matched to the enveloping circle tolerance F6 and can be interchanged with each other (mixed use) within the same accuracy class.

4
Needle roller bearings with ribs on the outer ring, with inner ring, open

F_r = *radial load*

① *Single row needle roller bearing*

② *Double row needle roller bearing*

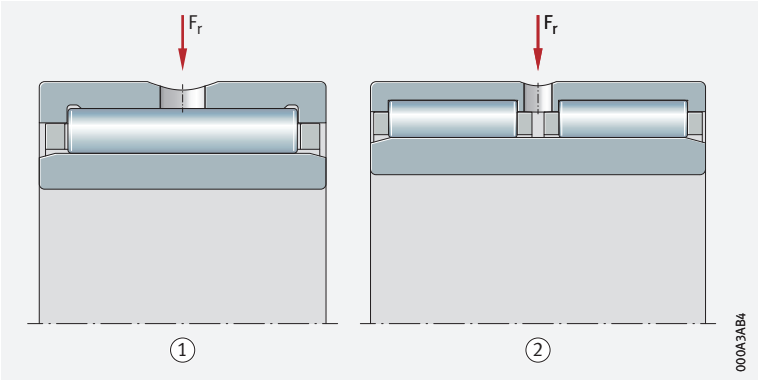

5
Needle roller bearings with ribs on the outer ring, with inner ring, sealed on one or both sides

F_r = *radial load*

① *Single row needle roller bearing, contact seal on one side*

② *Single row needle roller bearing, contact seal on both sides*

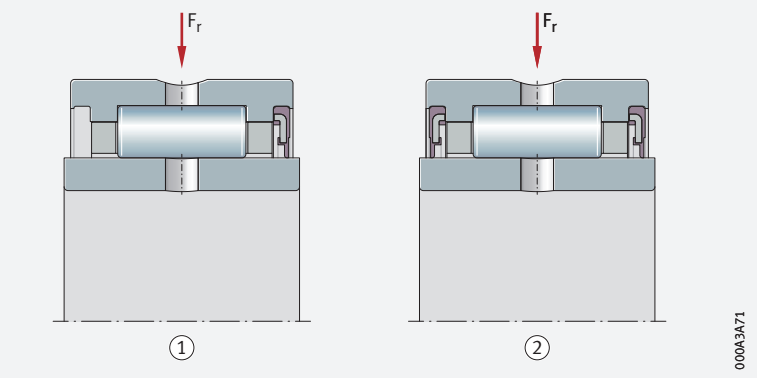

Needle roller bearings without ribs on the outer ring

The bearing components can be mounted independently of each other

Needle roller bearings without ribs on the outer ring are ready-to-fit units. The bearings are not self-retaining. This means that the outer ring, needle roller and cage assembly and inner ring can be fitted independently of each other. The needle roller and cage assembly can be mounted in different ways: it can be fitted together with the shaft, the outer ring or the inner ring, or it can be subsequently inserted between the outer ring and shaft or inner ring. The needle roller and cage assembly and outer ring must not, however, be interchanged with identical components from other bearings during mounting, but should always be fitted as supplied. The majority of the bearings are of a single row design. Double row bearings comprise two single row needle roller and cage assemblies arranged adjacent to each other. They have a lubrication groove in the circumference of the outer ring, at least one lubrication hole in the outer ring and the suffix ZW-ASR1 ➤*892|1.12*. Bearings are also available with a lubrication hole in the inner ring; these have the suffix IS1 ➤*892|1.12*.

Needle roller bearings without ribs on the outer ring are available:

- with and without an inner ring ➤*884|6* and ➤*884|7*
- in a single or double row design ➤*882|3* and ➤*883|5*

Needle roller bearings without ribs on the outer ring, without inner ring

Available types

Needle roller bearings without ribs on the outer ring and without an inner ring are available in the following types:

- RNAO (single row) ➤*884|6*
- RNAO..-ZW-ASR1 (double row) ➤*884|6*

For bearing arrangements with particularly compact radial dimensions

Bearings without an inner ring are highly suitable for bearing arrangements with particularly compact radial dimensions, if the shaft raceway can be hardened and ground ➤*894|1.16*. If no inner ring is used, the shaft can be designed to a greater thickness and thus with increased rigidity. If the shaft raceway is produced to the appropriate dimensional and geometrical accuracy, bearing arrangements with increased running accuracy can be achieved.

Length compensation (axial displacement facility)

Radial needle roller bearings are used as non-locating bearings, i. e. when the shaft must allow axial length compensation relative to the housing. For bearings without an inner ring, the axial displacement facility of the shaft is dependent on the width of the shaft raceway.

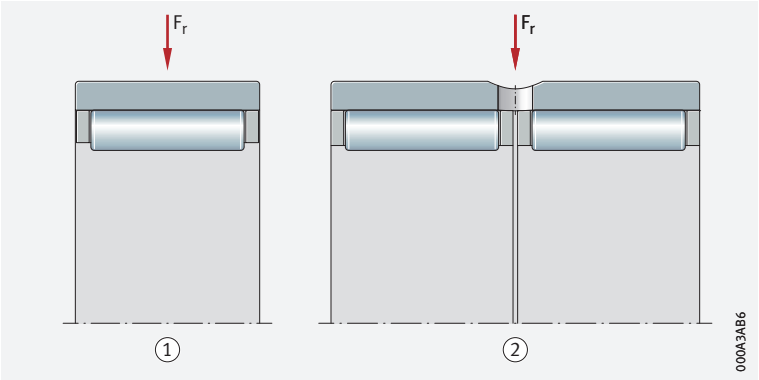

6
Needle roller bearings without ribs on the outer ring, without inner ring, open

F_r = *radial load*

① *Single row needle roller bearing*

② *Double row needle roller bearing*

Needle roller bearings without ribs on the outer ring, with inner ring

Available types

Needle roller bearings without ribs on the outer ring and with an inner ring are available in the following types:

- NAO (single row) ➤*884* | *7*
- NAO..-ZW-ASR1 (double row) ➤*884* | *7*

Bearings with an inner ring are used if the shaft cannot be configured as a rolling bearing raceway.

Axial displacement of the inner ring

For bearings with an inner ring, the axial displacement of the shaft relative to the housing occurs during rotational motion, without constraint in the bearing, between the needle rollers and the inner ring raceway without ribs. The maximum axial displacement s is given in the product tables ➤*926*. Where larger displacements occur, the standard ring can be replaced by a wider inner ring IR. Inner rings ➤*958*.

Replacement of inner rings

The outer ring and the needle roller and cage assembly are matched to each other and must not be interchanged during mounting with components from other bearings of the same size. In the case of the standard bearings, the inner rings are matched to the enveloping circle tolerance F6 and can be interchanged with each other (mixed use) within the same accuracy class.

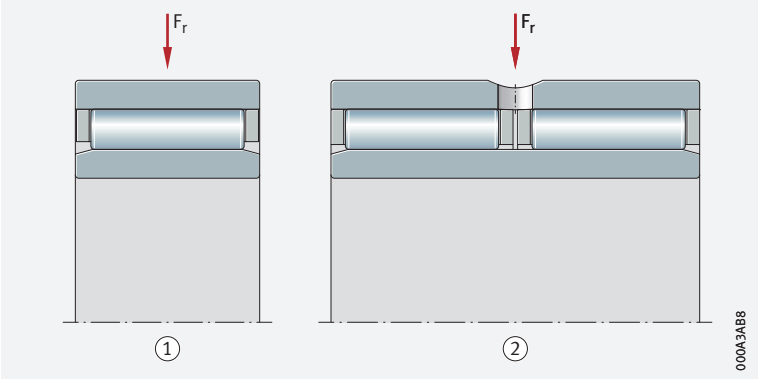

7
Needle roller bearings without ribs on the outer ring, with inner ring, open

F_r = *radial load*

① *Single row needle roller bearing*

② *Double row needle roller bearing*

Aligning needle roller bearings

Suitable for the compensation of angular misalignments

Aligning needle roller bearings comprise drawn outer cups, plastic support rings with a concave inner profile, outer rings with a spherical outside surface, needle roller and cage assemblies and removable inner rings ➤*885* | *8*. As a result of their design, these bearings can compensate misalignments, since the outer ring, with its spherical outside surface, is able to move in the concave plastic support ring ➤*887* | *1.3*. Due to their non-locating bearing function, the bearings cannot guide the shaft axially in any direction.

Aligning needle roller bearings without inner ring

✎ *Available types*

Aligning needle roller bearings are available in type RPNA ➤*885*|*8*.

✎ *For bearing arrangements with particularly compact radial dimensions*

Bearings without an inner ring are highly suitable for bearing arrangements with low section height and particularly compact dimensions, if the shaft raceway can be hardened and ground ➤*894*|*1.16*. If no inner ring is used, the shaft can be designed to a greater thickness and thus with increased rigidity.

8
Aligning needle roller bearing without inner ring

F_r = *radial load*

① *Drawn outer cup*
② *Plastic support rings with concave inner profile*
③ *Outer ring with spherical outside surface*
④ *Needle roller and cage assembly*

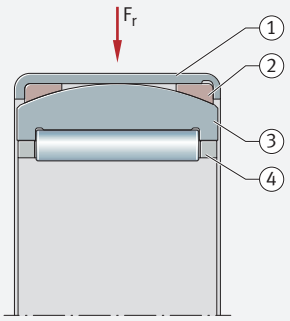

Aligning needle roller bearings with inner ring

✎ *Available types*

Aligning needle roller bearings are available in type PNA ➤*885*|*9*.

Bearings with an inner ring are used if the shaft cannot be configured as a rolling bearing raceway.

✎ *Axial displacement of the inner ring*

For bearings with an inner ring, the axial displacement of the shaft relative to the housing occurs during rotational motion, without constraint in the bearing, between the needle rollers and the inner ring raceway without ribs. The maximum axial displacement s is given in the product tables ➤*928*|▦. Where larger displacements occur, the standard ring can be replaced by a wider inner ring of series IR. Inner rings ➤*958*.

Replacement of inner rings

In the case of the standard bearings, the inner rings are matched to the enveloping circle tolerance F6 and can be interchanged with each other (mixed use) within the same accuracy class.

9
Aligning needle roller bearing with inner ring

F_r = *radial load*

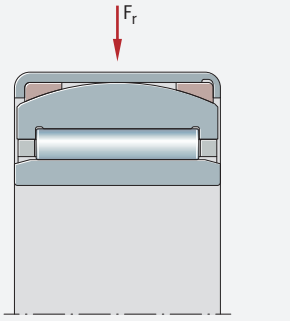

X-life premium quality

The radial needle roller bearings described here are X-life bearings. These bearings are characterised by a very high load carrying capacity and long rating life. This is achieved, for example, through the modified internal construction and optimised contact geometry between the needle rollers and raceways, as well as through the higher quality of the steel and rolling elements, higher surface quality and appropriate heat treatment and/or coating.

Advantages

Increased customer benefits due to X-life

The technical enhancements offer a range of advantages, such as:

- a more favourable load distribution in the bearing and thus a higher dynamic load carrying capacity of the bearings
- quieter running
- running with reduced friction and greater energy efficiency
- lower heat generation in the bearing
- higher possible speeds
- lower lubricant consumption and, consequently, longer maintenance intervals
- a measurably longer operating life
- high operational security
- compact, environmentally-friendly bearing arrangements

Lower operating costs, higher machine availability

In conclusion, these advantages improve the overall cost-efficiency of the bearing position significantly and thus bring about a sustainable increase in the efficiency of the machine and equipment.

Suffix XL

X-life radial needle roller bearings include the suffix XL in the designation ➤*886*|*10*, ➤*893*|*14* and ➤*902*|.

10

Calculated rating life and rating life verified in tests – comparison between X-life needle roller bearing and bearings without X-life quality

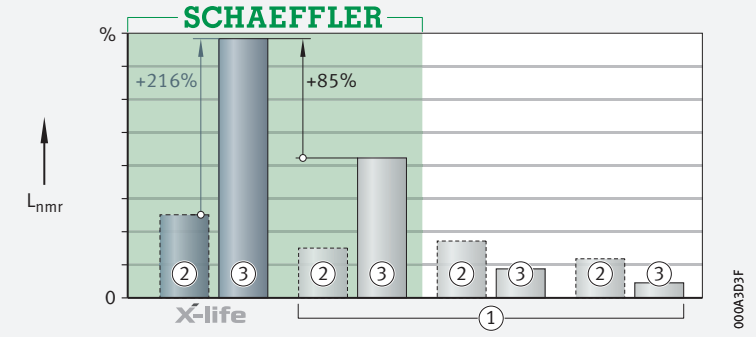

L_{nmr} = *adjusted reference rating life*

① *Bearing without X-life quality*
② *Calculated rating life*
③ *Rating life verified in tests*

Areas of application

Wide application range

Due to their special technical features, X-life needle roller bearings are highly suitable for bearing arrangements in:

- printing machinery
- the food and packaging industry
- compressors
- fluid and hydraulic pumps
- automotive chassis and gearboxes
- gearboxes for industrial, rail and wind turbine applications
- agricultural vehicles and equipment

X-life indicates a high product performance density and thus a particularly significant benefit to the customer. Further information on X-life ➤*10*.

1.2 Load carrying capacity

The bearings are pure radial bearings

Radial needle roller bearings support very high radial forces due to the presence of line contact, but may only be subjected to purely radial load. If the bearing position is also required to support axial forces, the needle roller bearings can, for example, be combined with axial needle roller bearings AXW ➤887|11. An extensive range of combined needle roller bearings is also available for combined loads ➤930.

If the surface of the shaft raceway is produced to DIN 617, the basic load ratings C_r in the product tables must be reduced by 15%.

11
Radial needle roller bearing combined with axial needle roller bearing

F_r = *radial load*
F_a = *axial load*

① *Needle roller bearing NK*
② *Axial needle roller bearing AXW*

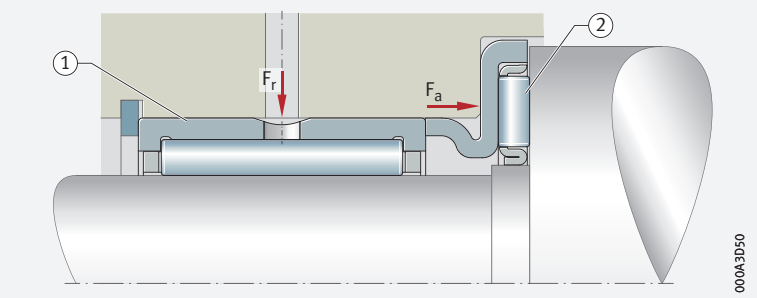

1.3 Compensation of angular misalignments

The bearings are not suitable for the compensation of shaft misalignments relative to the housing.

Needle roller bearings with or without ribs on the outer ring are not suitable for the compensation of angular misalignments. The extent to which a misalignment of the shaft can be tolerated relative to the housing bore is dependent on factors such as the design of the bearing arrangement, the size of the bearing, the operating clearance and the load. As a result, no guide value can be specified here for a possible misalignment. If angular misalignments occur, aligning needle roller bearings can be used ➤887|12.

In all cases, misalignments cause increased running noise, place increased strain on the cages and have a harmful influence on the operating life of the bearings.

Aligning needle roller bearings

Aligning needle roller bearings can compensate static misalignment

Due to the spherical outer ring and the concave support ring, aligning bearings can compensate static misalignments between the shaft and housing of up to 3° ➤887|12 and ➤880|1.1. The bearings must not, however, be used to support swivel or tumbling motion. During adjustment motion between the outer cup and the ring, a breakaway torque occurs. In order that adjustment motion can take place, the tolerances for the housing bore must be observed ➤896|5.

12
Compensation of misalignments

① *Spherical outer ring*
② *Concave support ring*

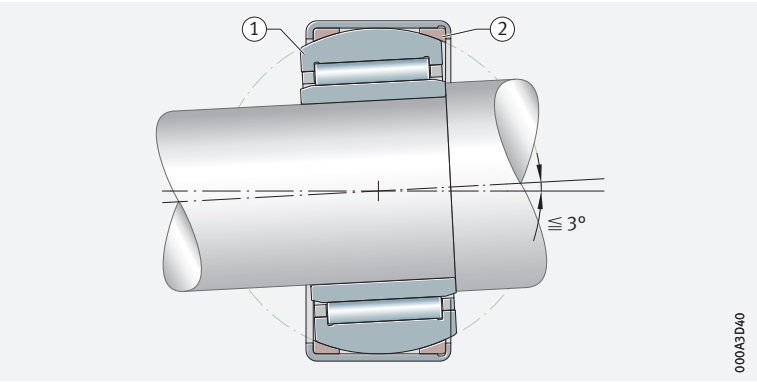

1.4 Lubrication

Needle roller bearings with or without ribs on the outer ring

Greased bearings

The sealed bearings are greased with a high quality lithium complex soap grease to GA08. Arcanol LOAD150 is suitable for relubrication.
For this purpose, the outer ring has a lubrication groove and a lubrication hole ➤*880|1.1*.

Do not wash greased bearings out prior to mounting. If mounting is carried out using thermal tools, the bearings should not be heated to a temperature in excess of +80 °C, taking account of the grease filling and seal material. If higher heating temperatures are required, it must be ensured that the permissible upper temperature limits for grease and seals are not exceeded.

Schaeffler recommends the use of induction heating devices for heating purposes➤*900*.

Ungreased bearings

Open bearings are not greased. They must be lubricated with oil or grease.

Compatibility with plastic cages

When using bearings with plastic cages, compatibility between the lubricant and the cage material must be ensured if synthetic oils, lubricating greases with a synthetic oil base or lubricants containing a high proportion of EP additives are used.

Observe oil change intervals

Aged oil and additives in the oil can impair the operating life of plastics at high temperatures. As a result, stipulated oil change intervals must be strictly observed.

If there is any uncertainty regarding the suitability of the selected lubricant for the application, please consult Schaeffler or the lubricant manufacturer.

1.5 Sealing

The bearings are open or sealed

Needle roller bearings are available in an unsealed design in accordance with DIN 617:2008 and ISO 3245:2015 and a sealed design in accordance with DIN 617:2008.

Sealed bearings

Integrated seals are particularly space-saving

Under normal operating conditions, contact seals give protection against contamination, spray water and the loss of lubricant. The integration of such seals into the bearing provides a compact, reliable, proven and economical sealing solution ➤*882|3* and ➤*883|5*.
The sealing material used is the oil-resistant and wear-resistant elastomer material NBR. The seal lips are in contact with a defined contact pressure against the sliding surface.

Unsealed bearings

Provide seals in the adjacent construction

In the case of unsealed bearings, sealing of the bearing position must be carried out in the adjacent construction. This must reliably prevent:

- moisture and contaminants from entering the bearing
- the egress of lubricant from the bearing

Sealing rings must not be used as running surfaces for the cage, as these will be damaged as a result and no longer able to fulfil their sealing function.

Sealing of the bearing position with a sealing ring G

✎ *Effective sealing elements for use in sealing open bearings*

Bearing positions with open needle roller bearings can be sealed cost-effectively with sealing rings G. The sealing rings are designed as contact seals and are arranged in front of the bearing ➤*889*|🗀 *13*.
They are suitable for circumferential velocities at the running surface of up to 10 m/s and protect the bearing position reliably against contamination, spray water and the excessive loss of lubricant. The sealing rings are matched to the low radial dimensions of needle roller bearings. They are very easy to fit, since they are simply pressed into the housing bore.

🗀 **13**
Sealing of the bearing position with a sealing ring G

① *Needle roller bearing with ribs on the outer ring, open*
② *Sealing ring G*

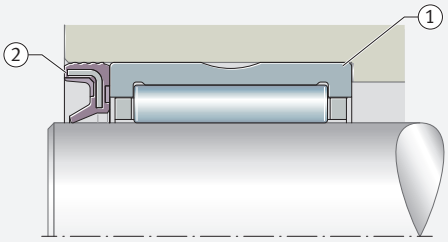

1.6 Speeds

✎ *Speeds in the product tables*

The product tables generally give two speeds for the bearings:
- the kinematic limiting speed n_G
- the thermal speed rating $n_{\vartheta r}$

Limiting speeds

The limiting speed n_G is the kinematically permissible speed of the bearing. Even under favourable mounting and operating conditions, this value should not be exceeded without prior consultation with Schaeffler ➤*64*.

The values given in the product tables are valid for oil lubrication in the case of bearings without seals and for grease lubrication where bearings are supplied greased and with seals.

✎ *Values for grease lubrication*

For grease lubrication, 60% of the value stated in the product tables is permissible in the case of aligning needle roller bearings.

Reference speeds

✎ $n_{\vartheta r}$ *is used to calculate* n_{ϑ}

The thermal speed rating $n_{\vartheta r}$ is not an application-oriented speed limit, but is a calculated ancillary value for determining the thermally safe operating speed n_{ϑ} ➤*64*.

✎ *Bearings with contact seals*

For bearings with contact seals, no reference speeds are defined in accordance with DIN ISO 15312:2004. As a result, only the limiting speed n_G is given in the product tables for these bearings.

1.7 Noise

Schaeffler Noise Index

The Schaeffler Noise Index (SGI) is not yet available for this bearing type ➤*69*. The data for these bearing series will be introduced and updated in stages.

Further information:
- ***medias*** *https://medias.schaeffler.com*

1.8 Temperature range

✎ *Limiting values*

The operating temperature of the bearings is limited by:

- the dimensional stability of the bearing rings and rolling elements
- the cage
- the lubricant
- the seals

Possible operating temperatures of needle roller bearings with ribs ➤ *890* | ▦ *1*.

▦ **1**
Permissible temperature ranges

Operating temperature	Needle roller bearings with or without ribs, aligning needle roller bearings		
	open bearings	sealed bearings, aligning needle roller bearings	with plastic cage
	–30 °C to +120 °C	–20 °C to +100 °C limited by the lubricant, seal material and the plastic support ring	–30 °C to +120 °C

In the event of anticipated temperatures which lie outside the stated values, please contact Schaeffler.

1.9 Cages

✎ *Solid cages made from polyamide PA66 and sheet steel are used as standard*

The standard cages are made from sheet steel or plastic (polyamide PA66). Bearings with a plastic cage have the suffix TV. Aligning needle roller bearings are fitted with sheet steel cages.

1.10 Internal clearance

Radial internal clearance

✎ *The standard is CN*

Needle roller bearings with an inner ring are manufactured as standard with radial internal clearance CN (normal) ➤ *890* | ▦ *2*. CN is not stated in the designation.

For bearings with ribs on the outer ring, certain sizes are also available by agreement with the larger internal clearance C3.

The values for radial internal clearance in bearings with an inner ring correspond to DIN 620-4:2004 (ISO 5753-1:2009) ➤ *890* | ▦ *2*. They are valid for bearings which are free from load and measurement forces (without elastic deformation).

Bearings with inner ring

▦ **2**
Radial internal clearance of needle roller bearings with inner ring

Nominal bore diameter d mm		Radial internal clearance			
		CN (Group N) µm		C3 (Group 3) µm	
over	incl.	min.	max.	min.	max.
–	24	20	45	35	60
24	30	20	45	35	60
30	40	25	50	45	70
40	50	30	60	50	80
50	65	40	70	60	90
65	80	40	75	65	100
80	100	50	85	75	110
100	120	50	90	85	125
120	140	60	105	100	145

continued ▼

2 *Radial internal clearance of needle roller bearings with inner ring*

Nominal bore diameter d mm		Radial internal clearance CN (Group N) µm		C3 (Group 3) µm	
over	incl.	min.	max.	min.	max.
140	160	70	120	115	165
160	180	75	125	120	170
180	200	90	145	140	195
200	225	105	165	160	220
225	250	110	175	170	235
250	280	125	195	190	260
280	315	130	205	200	275
315	355	145	225	225	305
355	400	190	280	280	370
400	450	210	310	310	410
450	500	220	330	330	440

continued ▲

Enveloping circle diameter F_w for bearings without an inner ring

For bearings without an inner ring, the enveloping circle diameter F_w is used

In the case of bearings without inner ring, the dimension for the enveloping circle diameter F_w is used instead of the radial internal clearance. The enveloping circle is the inner inscribed circle of the needle rollers in clearance-free contact with the outer raceway. For bearings before fitting, the enveloping circle F_w is in the tolerance class F6.

Deviations ➤ *891* | 3.

3 *Deviations for the enveloping circle diameter*

Enveloping circle diameter F_w mm		Tolerance class F6 Tolerance for enveloping circle diameter F_w	
		upper deviation	lower deviation
over	incl.	µm	µm
3	6	+18	+10
6	10	+22	+13
10	18	+27	+16
18	30	+33	+20
30	50	+41	+25
50	80	+49	+30
80	120	+58	+36
120	180	+68	+43
180	250	+79	+50
250	315	+88	+56
315	400	+98	+62
400	500	+108	+68

Bearings without ribs on the outer ring

If the enveloping circle is to be in tolerance class F6, the outer ring/needle roller cage assembly as a matched pair (as delivered) must not be interchanged with parts from other matched pairs during mounting of the bearings.

1.11 Dimensions, tolerances

Dimension standards

The main dimensions of needle roller bearings correspond to ISO 15:2017. The main dimensions of types RNA48, NA48, RNA49, NA49, RNA69, NA69 correspond to DIN 617:2008 and ISO 1206:2001.

Nominal dimensions of needle roller bearings with ribs ➤*902*.

Chamfer dimensions

The limiting dimensions for chamfer dimensions correspond to DIN 620-6:2004. The maximum chamfer dimensions for the inner rings to DIN 620-6:2004 must be taken into consideration. Overview and limiting values ➤*137*|*7.11*. Nominal value of chamfer dimension ➤*902*.

Tolerances

The tolerances for the dimensional and running accuracy of needle roller bearings correspond to ISO 492:2014. This excludes the types RNA48, NA48, RNA49, NA49, RNA69, NA69 and aligning needle roller bearings; the dimensional and running tolerances of these bearings correspond to ISO 1206:2001. Needle roller bearings with ribs are available by agreement with increased dimensional, geometrical and running accuracy (suffix P5). This excludes the outside diameter and the width of the outer cup in aligning needle roller bearings. The width has a tolerance of ±0,5 mm.

1.12 Suffixes

Suffixes describe the design and features of a bearing in more detail.

4 *Suffixes and corresponding descriptions*

Suffix	Description of suffix	
ASR1	Lubrication hole and lubrication groove in the outer ring, dependent on the size	Standard
C3	Radial internal clearance C3 (larger than normal)	Special design, available by agreement
D	Bearing with improved steel cage for downsizing option	
IS1	Lubrication hole in the inner ring, dependent on the size	Standard
P5	Bearing with high dimensional, geometrical and running accuracy	Special design, available by agreement
RSR	Contact seal on one side (lip seal)	Standard
TV	Bearing with cage made from glass fibre reinforced polyamide PA66	
TW	Bearing with cage made from glass fibre reinforced polyamide PA66 and two short needle rollers per cage pocket	Available by agreement
XL	X-life bearing	Standard
ZW	Double row design, dependent on the size	
2RSR	Contact seal on both sides (lip seal)	

1.13 Structure of bearing designation

With ***medias*** interchange, equivalent Schaeffler bearing designations can be determined for bearing designations from other rolling bearing manufacturers *https://www.schaeffler.de/std/1B69*.

Examples of composition of bearing designation

The designation of bearings follows a set model. Examples ➤*893*|*14* to ➤*893*|*17*. The composition of designations is subject in part to DIN 623-1 ➤*102*|*10*.

14
Single row needle roller bearing with ribs on the outer ring, without inner ring, open: designation structure

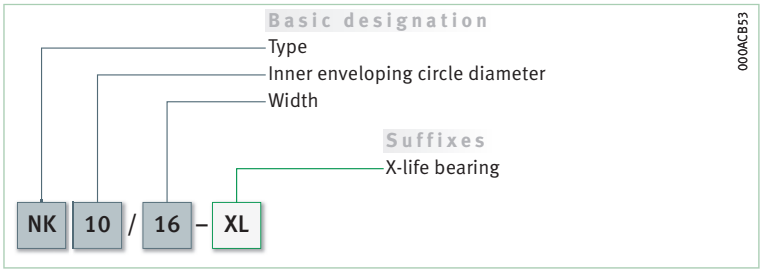

15
Single row needle roller bearing with ribs on the outer ring, without inner ring, sealed on both sides: designation structure

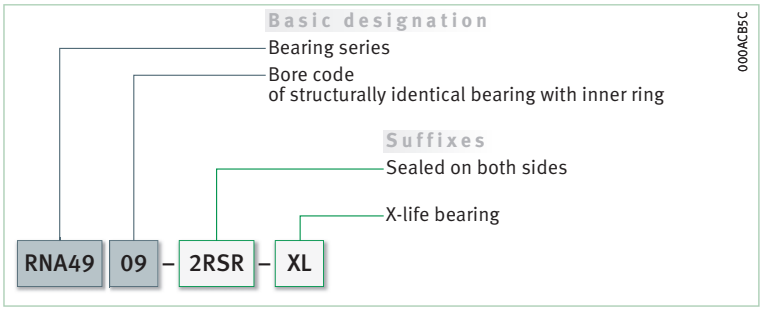

16
Double row needle roller bearing without ribs on the outer ring, without inner ring, open: designation structure

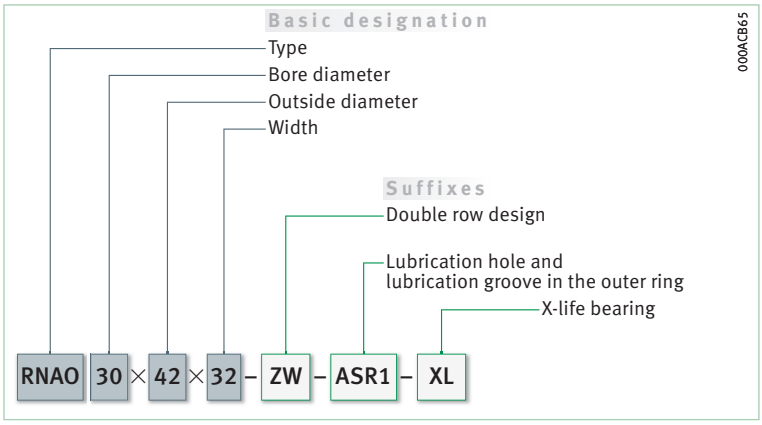

17
Aligning needle roller bearing with inner ring: designation structure

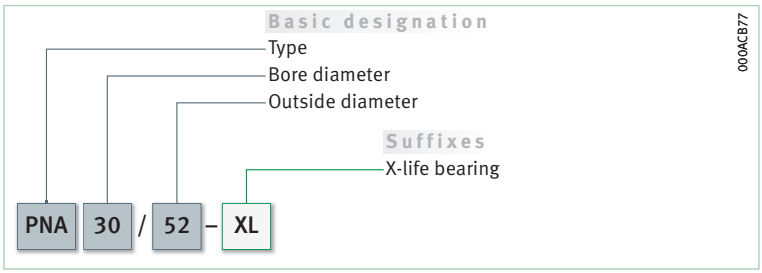

1.14 Dimensioning

Equivalent dynamic bearing load

✎ *$P = F_r$ under purely radial load of constant magnitude and direction*

The basic rating life equation $L = (C_r/P)^p$ used in the dimensioning of bearings under dynamic load assumes a load of constant magnitude and direction. In radial bearings, this is a purely radial load F_r. If this condition is met, the bearing load F_r is used in the rating life equation for P ($P = F_r$) ➤894| 1.

Needle roller bearings and aligning needle roller bearings are non-locating bearings and may only be subjected to radial load.

Equivalent dynamic load **1**

$$P = F_r$$

Legend

P	N	Equivalent dynamic bearing load
F_r	N	Radial load.

Equivalent static bearing load

For needle roller bearings subjected to static load ➤894| 2.

Equivalent static load **2**

$$P_0 = F_{0r}$$

Legend

P_0	N	Equivalent static bearing load
F_{0r}	N	Largest radial load present (maximum load).

Static load safety factor

✎ *$S_0 = C_0/P_0$*

In addition to the basic rating life L (L_{10h}), it is also always necessary to check the static load safety factor S_0 ➤894| 3.

Static load safety factor **3**

$$S_0 = \frac{C_0}{P_0}$$

Legend

S_0	–	Static load safety factor
C_0	N	Basic static load rating
P_0	N	Equivalent static bearing load.

1.15 Minimum load

✎ *In order to prevent damage due to slippage, a minimum radial load of $P > C_{0r}/60$ is required*

In order that no slippage occurs between the contact partners, the needle roller bearings must be constantly subjected to a sufficiently high load. Based on experience, a minimum radial load of the order of $P > C_{0r}/60$ is thus necessary. In most cases, however, the radial load is already higher than the requisite minimum load due to the weight of the supported parts and the external forces.

If the minimum radial load is lower than indicated above, please consult Schaeffler.

1.16 Design of bearing arrangements

✎ *Support bearing rings over their entire circumference and width*

In order to allow full utilisation of the load carrying capacity of the bearings and achieve the requisite rating life, the bearing rings must be rigidly and uniformly supported by means of contact surfaces over their entire circumference and over the entire width of the raceway. Support can be provided by means of a cylindrical seating surface. The seating and contact surfaces should not be interrupted by grooves, holes or other recesses. The accuracy of mating parts must meet specific requirements ➤896| 5 to ➤897| 8.

Radial location

For secure radial location, tight fits are necessary

Needle roller bearings with an inner ring are radially located by means of fits on the shaft and in the housing.

In addition to supporting the rings adequately, the bearings must also be securely located in a radial direction, to prevent creep of the bearing rings on the mating parts under load. This is generally achieved by means of tight fits between the bearing rings and the mating parts. If the rings are not secured adequately or correctly, this can cause severe damage to the bearings and adjacent machine parts. Influencing factors, such as the conditions of rotation, magnitude of the load, internal clearance, temperature conditions, design of the mating parts and the mounting and dismounting options must be taken into consideration in the selection of fits.

If shock type loads occur, tight fits (transition fit or interference fit) are required to prevent the rings from coming loose at any point. Clearance, transition or interference fits ➤*152*|▦*6* and ➤*160*|▦*7*.

The following information provided in Technical principles must be taken into consideration in the design of bearing arrangements:

- criteria for selection of fits ➤*146*
- conditions of rotation ➤*147*
- tolerance classes for cylindrical shaft seats (radial bearings) ➤*149*|▦*2*
- shaft fits ➤*152*|▦*6*
- tolerance classes for bearing seats in housings (radial bearings) ➤*150*|▦*4*
- housing fits ➤*160*|▦*7*

Axial location – location methods

The bearings must also be securely located in an axial direction

As a tight fit alone is not normally sufficient to also locate the bearing rings securely on the shaft and in the housing bore in an axial direction, this must usually be achieved by means of an additional axial location or retention method. The axial location of the bearing rings must be matched to the type of bearing arrangement. Shaft and housing shoulders, housing covers, nuts, spacer rings and retaining rings etc., are fundamentally suitable ➤*895*|⧉*18* and ➤*895*|⧉*19*.

⧉18
Axial location of the bearing rings in bearings with ribs on the outer ring

① *Retaining ring*

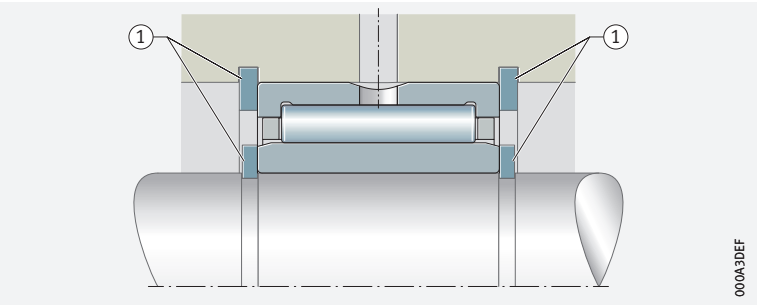

⧉19
Axial location of the bearing rings in bearings without ribs on the outer ring

① *Retaining ring*
② *Axial washer*

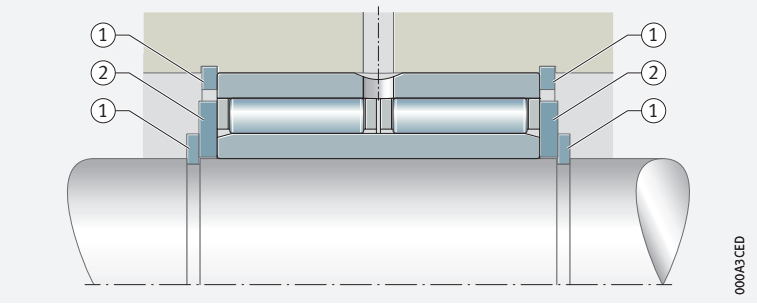

Axial guidance of the needle roller and cage assemblies in bearings without ribs on the outer ring

The needle roller and cage assemblies must be axially guided on lateral, burr-free running surfaces. The running surfaces for the cage must be precision machined (Ra 2) and resistant to wear. The product tables give the maximum value of the radius r_a, the diameters of the abutment shoulders d_a, D_a and the dimension d_b, D_b for axial guidance of the needle roller and cage assembly. Mounting dimensions ➤*922*.

Tolerances of the housing bore for aligning needle roller bearings

5
Tolerance classes and surface design for housings, as a function of the material – for aligning needle roller bearings

Housing material	Bore tolerance to ISO 286-2	Roundness tolerance max.	Parallelism tolerance max.	Recommended mean roughness value Ramax (Rzmax) µm
Steel or cast iron	N6 Ⓔ	IT5/2	IT5/2	0,8 (4)
Light metal	R6 Ⓔ			

Dimensional, geometrical and running accuracy of cylindrical bearing seats

A minimum of IT6 should be provided for the shaft seat and a minimum of IT7 for the housing seat

The accuracy of the cylindrical bearing seat on the shaft and in the housing should correspond to the accuracy of the bearing used. For needle roller bearings with ribs with the tolerance class Normal, the shaft seat should correspond to a minimum of standard tolerance grade IT6 and the housing seat to a minimum of IT7. Guide values for the geometrical and positional tolerances of the bearing seating surfaces ➤*896* *6*. Tolerances t_1 to t_3 in accordance with ➤*170* *11*. Numerical values for IT grades ➤*897* *7*.

6
Guide values for the geometrical and positional tolerances of bearing seating surfaces

Bearing tolerance class		Bearing seating surface	Standard tolerance grades to ISO 286-1 (IT grades)			
to ISO 492	to DIN 620		Diameter tolerance	Roundness tolerance t_1	Parallelism tolerance t_2	Total axial runout tolerance of abutment shoulder t_3
Normal	PN (P0)	Shaft	IT6 (IT5)	Circumferential load IT4/2	Circumferential load IT4/2	IT4
				Point load IT5/2	Point load IT5/2	
		Housing	IT7 (IT6)	Circumferential load IT5/2	Circumferential load IT5/2	IT5
				Point load IT6/2	Point load IT6/2	
–	P5	Shaft	IT5	Circumferential load IT2/2	Circumferential load IT2/2	IT2
				Point load IT3/2	Point load IT3/2	
		Housing	IT6	Circumferential load IT3/2	Circumferential load IT3/2	IT3
				Point load IT4/2	Point load IT4/2	

7 *Numerical values for ISO standard tolerances (IT grades) to ISO 286-1:2010*

IT grade	Nominal dimension in mm											
	over	3	6	10	18	30	50	80	120	180	250	315	400
	incl.	6	10	18	30	50	80	120	180	250	315	400	500
	Values in µm												
IT2		1,5	1,5	2	2,5	2,5	3	4	5	7	8	9	10
IT3		2,5	2,5	3	4	4	5	6	8	10	12	13	15
IT4		4	4	5	6	7	8	10	12	14	16	18	20
IT5		5	6	8	9	11	13	15	18	20	23	25	27
IT6		8	9	11	13	16	19	22	25	29	32	36	40
IT7		12	15	18	21	25	30	35	40	46	52	57	63

Roughness of cylindrical bearing seating surfaces

Ra must not be too high

The roughness of the bearing seats must be matched to the tolerance class of the bearings. The mean roughness value Ra must not be too high, in order to maintain the interference loss within limits. The shafts must be ground, while the bores must be precision turned. Guide values as a function of the IT grade of bearing seating surfaces ➤*897*|▦*8*.

8 *Roughness values for cylindrical bearing seating surfaces – guide values*

Nominal diameter of the bearing seat d (D) mm		Recommended mean roughness value for ground bearing seats Ramax µm			
		Diameter tolerance (IT grade)			
over	incl.	IT7	IT6	IT5	IT4
–	80	1,6	0,8	0,4	0,2
80	500	1,6	1,6	0,8	0,4

Mounting dimensions

The contact surfaces for the rings must be of sufficient height

The mounting dimensions of the shaft and housing shoulders, and spacer rings etc., must ensure that the contact surfaces for the bearing rings are of sufficient height. However, they must also reliably prevent rotating parts of the bearing from grazing stationary parts. The abutment shoulders (shaft, housing) should be perpendicular to the bearing axis.

The transition from the bearing seat to the abutment shoulder must be designed with rounding to DIN 5418 or an undercut to DIN 509.

Chamfer dimensions

The chamfer dimensions r are given in the product tables. These dimensions are limiting dimensions (minimum dimensions); the actual values should not be lower than specified. The overlap between the snap rings and the end faces of the bearing rings must be sufficiently large.

Raceway for bearings without an inner ring (direct bearing arrangement)

The raceway must be suitable as a rolling bearing raceway

In the case of needle roller bearings without an inner ring, the rolling element raceway on the shaft must be hardened and ground. Tolerances and surface designs are shown in ➤*898*|▦*9*. The surface hardness of the raceway must be 670 HV to 840 HV, the hardening depth CHD or SHD must be sufficiently large.

The values in the tables are valid for housing tolerances up to K7 Ⓔ. For tighter bores, the operating clearance should be checked by either calculation or measurement.

9 *Tolerance classes and surface design of raceways for needle roller bearings without an inner ring*

Shaft diameter		Shaft tolerance[1]			Design of raceway		
					Roundness tolerance	Parallelism tolerance	Recommended mean roughness value
Nominal dimension		Operating clearance					Ramax (Rzmax)
mm							
over	incl.	small	normal	large	max.	max.	µm
–	65	k5	h5	g6	IT3	IT3	0,1 (0,4)
65	80	k5	h5	f6			
80	120	k5	g5	f6			0,15 (0,63)
120	160	k5	g5	f6			0,2 (1)
160	180	k5	g5	e6			
180	200	j5	g5	e6			
200	250	j5	f6	e6			
250	315	h5	f6	e6			
315	415	g5	f6	d6			

1) *The envelope requirement Ⓔ applies.*

Shaft raceway to DIN 617

If the surface of the shaft raceway is produced to DIN 617, the basic load ratings C_r in the product tables must be reduced by 15% ➤*887|1.2*.

Steels for the raceway

Through hardening steels

Through hardening steels in accordance with ISO 683-17 (e.g. 100Cr6) are suitable as materials for rolling bearing raceways in direct bearing arrangements. These steels can also be surface layer hardened.

Case hardening steels

Case hardening steels must correspond to DIN EN ISO 683-17 (such as 17MnCr5, 18CrNiMo7-6) or DIN EN ISO 683-3 (such as 16MnCr5).

Steels for inductive surface layer hardening

For flame and induction hardening, steels in accordance with DIN EN ISO 683-17 (e.g. C56E2, 43CrMo4) or DIN 17212 (e.g. Cf53) should be used.

Surface hardness and hardening depth

✎ *Nominal surface hardness: ≧ 670 HV*

The requisite minimum surface hardness of 670 HV is valid for raceways, axial washers and shaft shoulders. Steels hardened by means of case, flame or induction hardening must have a surface hardness of 670 HV to 840 HV and an adequate hardening depth CHD or SHD.

Raceway hardness of less than 670 HV

If the raceway fulfils the requirements for rolling bearing materials but the raceway hardness is less than 670 HV (58 HRC), the static and dynamic load carrying capacity of the bearing is reduced. In order to determine the dynamic and static load carrying capacity of the bearing arrangement, the basic dynamic load rating C of the bearings must be multiplied by the reduction factor f_H (dynamic hardness factor) and the basic static load rating C_{0r} by the reduction factor f_{H0} (static hardness factor).

20
Dynamic hardness factor for raceway hardness values of less than 670 HV

f_H = *dynamic hardness factor*
HV, HRC = *surface hardness*

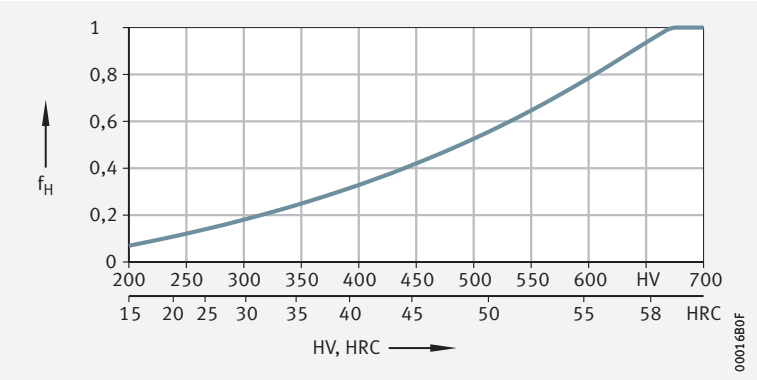

21
Static hardness factor for raceway hardness values of less than 670 HV

f_{H0} = *static hardness factor*
HV, HRC = *surface hardness*

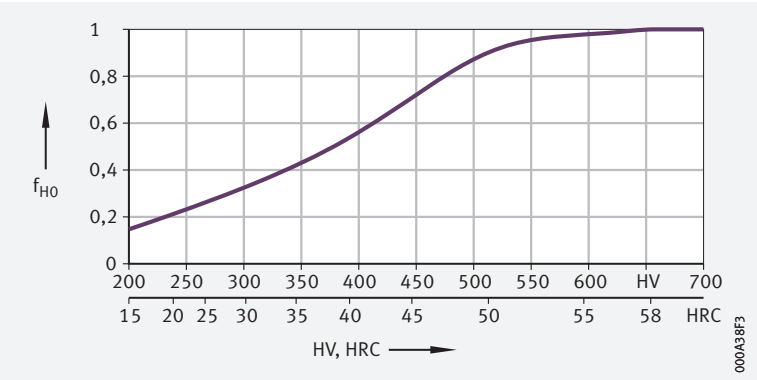

Determining the case hardening depth

Approximation value for case hardening depth

The reference value for the load present is the equivalent stress in accordance with the distortion energy hypothesis (DEH) as a function of the rolling element diameter D_w and the magnitude of the load.

For calculation of the case hardening depth CHD, the following applies:

4
Case hardening depth

$$CHD \geqq 0{,}052 \cdot D_w$$

Legend

CHD	mm	Case hardening depth
D_w	mm	Rolling element diameter.

The local hardness must always be above the local requisite hardness, which can be calculated from the equivalent stress.

Determining the surface hardening depth

In these surface hardening methods, the load and contact geometry must be taken into consideration when determining the requisite hardening depth.

For the calculation of the surface hardening depth SHD applies:

5
Surface hardening depth

$$SHD \geqq 140 \cdot D_w / R_{p0,2}$$

Legend

SHD	mm	Surface hardening depth
D_w	mm	Rolling element diameter
$R_{p0,2}$	N/mm²	Yield point of base material.

1.17 Mounting and dismounting

The mounting and dismounting options for needle roller bearings with ribs, by thermal, hydraulic or mechanical methods, must be taken into consideration in the design of the bearing position.

Aligning needle roller bearings

Mounting using pressing mandrel

Due to the drawn outer cup, the bearings must be mounted using a special pressing mandrel ➤*864*. The marked side of the bearing should be in contact with the flange of the mandrel. A toroidal ring on the mandrel holds the bearing securely on the mandrel.

Schaeffler Mounting Handbook

Rolling bearings must be handled with great care

Rolling bearings are well-proven precision machine elements for the design of economical and reliable bearing arrangements, which offer high operational security. In order that these products can function correctly and achieve the envisaged operating life without detrimental effect, they must be handled with care.

The Schaeffler Mounting Handbook MH 1 gives comprehensive information about the correct storage, mounting, dismounting and maintenance of rotary rolling bearings *https://www.schaeffler.de/std/1D53*. It also provides information which should be observed by the designer, in relation to the mounting, dismounting and maintenance of bearings, in the original design of the bearing position. This book is available from Schaeffler on request.

1.18 Legal notice regarding data freshness

The further development of products may also result in technical changes to catalogue products

Of central interest to Schaeffler is the further development and optimisation of its products and the satisfaction of its customers. In order that you, as the customer, can keep yourself optimally informed about the progress that is being made here and with regard to the current technical status of the products, we publish any product changes which differ from the printed version in our electronic product catalogue.

§ We therefore reserve the right to make changes to the data and illustrations in this catalogue. This catalogue reflects the status at the time of printing. More recent publications released by us (as printed or digital media) will automatically precede this catalogue if they involve the same subject. Therefore, please always use our electronic product catalogue to check whether more up-to-date information or modification notices exist for your desired product.

Link to electronic product catalogue

The following link will take you to the Schaeffler electronic product catalogue: *https://medias.schaeffler.com*.

1.19 Further information

In addition to the data in this chapter, the following chapters in Technical principles must also be observed in the design of bearing arrangements:

- Determining the bearing size ➤*34*
- Rigidity ➤*54*
- Friction and increases in temperature ➤*56*
- Speeds ➤*64*
- Bearing data ➤*97*
- Lubrication ➤*70*
- Sealing ➤*185*
- Design of bearing arrangements ➤*141*
- Mounting and dismounting ➤*194*



Needle roller bearings with ribs

Without inner ring
Open

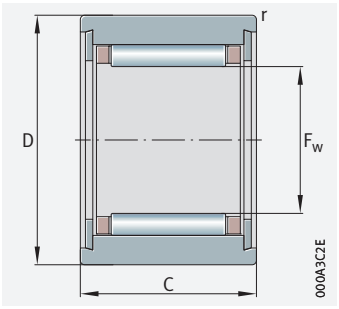

NK (F_w ≦ 10 mm)

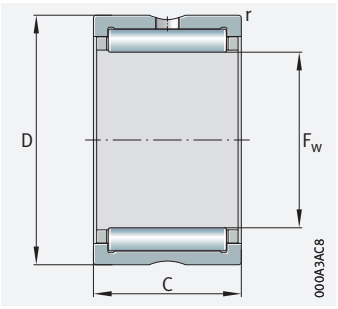

NK (F_w ≧ 12 mm), RNA49, RNA69

F_w = 5 – 19 mm

Main dimensions			Basic load ratings		Fatigue limit load	Limiting speed	Speed rating	Mass	Designation
F_w	D	C	dyn. C_r	stat. C_{0r}	C_{ur}	n_G	$n_{\vartheta r}$	m	➤892|1.12 ➤893|1.13 X-life ➤886
			N	N	N	min^{-1}	min^{-1}	≈ g	
5	10	10	2 650	1 920	300	39 000	55 000	3,1	**NK5/10-TV-XL**[2]
	10	12	3 400	2 650	440	39 000	54 000	3,7	**NK5/12-TV-XL**[2]
6	12	10	2 950	2 280	360	36 500	48 500	4,7	**NK6/10-TV-XL**[2]
	12	12	3 800	3 150	530	36 500	47 500	5,7	**NK6/12-TV-XL**[2]
7	14	10	3 250	2 650	420	34 500	43 000	6,9	**NK7/10-TV-XL**[2]
	14	12	4 150	3 600	610	34 500	42 000	8,2	**NK7/12-TV-XL**[2]
8	15	12	4 450	4 100	700	32 500	37 000	8,7	**NK8/12-TV-XL**[2]
	15	16	5 800	5 800	990	32 500	36 500	12	**NK8/16-TV-XL**[2]
9	16	12	5 100	5 000	860	31 000	32 000	10,3	**NK9/12-TV-XL**[2]
	16	16	6 600	7 100	1 210	31 000	32 000	12,8	**NK9/16-TV-XL**[2]
10	17	12	5 300	5 500	940	29 500	29 000	10,1	**NK10/12-TV-XL**[2]
	17	16	7 000	7 800	1 330	29 500	28 500	13,3	**NK10/16-TV-XL**[2]
12	19	12	7 200	7 100	1 310	26 500	22 400	12,1	**NK12/12-XL**
	19	16	10 100	11 000	1 950	26 500	21 600	15,9	**NK12/16-XL**
14	22	16	15 400	17 100	2 900	24 600	16 800	21,4	**NK14/16-D-XL**
	22	16	11 400	11 500	2 140	24 600	18 600	20,7	**NK14/16-XL**
	22	20	14 500	15 600	2 750	24 600	18 300	25,5	**NK14/20-XL**
	22	13	9 600	9 200	1 660	24 600	17 800	16,5	**RNA4900-XL**
15	23	16	12 100	12 700	2 360	23 900	17 300	21,8	**NK15/16-XL**
	23	20	15 400	17 200	3 050	23 900	17 000	26,6	**NK15/20-XL**
16	24	16	12 800	13 900	2 600	23 200	16 200	22,4	**NK16/16-XL**
	24	20	16 300	18 800	3 350	23 200	15 900	28,4	**NK16/20-XL**
	24	13	10 600	10 900	1 970	23 200	15 300	17,4	**RNA4901-XL**
	24	22	18 100	21 600	3 850	23 200	14 300	31	**RNA6901-XL**
17	25	16	13 500	15 000	2 800	22 600	15 300	23,7	**NK17/16-XL**
	25	20	17 100	20 400	3 600	22 600	15 000	29,8	**NK17/20-XL**
18	26	16	14 100	16 200	3 050	22 100	14 400	24,9	**NK18/16-XL**
	26	20	17 900	22 000	3 900	22 100	14 100	31,4	**NK18/20-XL**
19	27	16	14 700	17 400	3 250	21 600	13 700	26,1	**NK19/16-XL**
	27	20	18 700	23 600	4 200	21 600	13 400	32,2	**NK19/20-XL**

medias *https://www.schaeffler.de/std/1F9A*

[1] For unsealed needle roller bearings, dimensionally matched sealing rings of series G or SD can be used to provide protection against contamination.

[2] With closing rings, without lubrication hole and groove.

Dimensions		Suitable sealing rings[1)]	
F_w	r min.		
5	0,15	**GR5×10×2**	–
	0,15	**GR5×10×2**	–
6	0,15	**GR6×12×2**	–
	0,15	**GR6×12×2**	–
7	0,3	**GR7×14×2**	–
	0,3	**GR7×14×2**	–
8	0,3	**G8×15×3**	**SD8×15×3**
	0,3	**G8×15×3**	**SD8×15×3**
9	0,3	**G9×16×3**	–
	0,3	**G9×16×3**	–
10	0,3	**G10×17×3**	**SD10×17×3**
	0,3	**G10×17×3**	**SD10×17×3**
12	0,3	**G12×19×3**	**SD12×19×3**
	0,3	**G12×19×3**	**SD12×19×3**
14	0,3	**G14×22×3**	**SD14×22×3**
	0,3	**G14×22×3**	**SD14×22×3**
	0,3	**G14×22×3**	**SD14×22×3**
	0,3	**G14×22×3**	**SD14×22×3**
15	0,3	**G15×23×3**	**SD15×23×3**
	0,3	**G15×23×3**	**SD15×23×3**
16	0,3	**G16×24×3**	**SD16×24×3**
	0,3	**G16×24×3**	**SD16×24×3**
	0,3	**G16×24×3**	**SD16×24×3**
	0,3	**G16×24×3**	**SD16×24×3**
17	0,3	**G17×25×3**	**SD17×25×3**
	0,3	**G17×25×3**	**SD17×25×3**
18	0,3	**G18×26×4**	**SD18×26×4**
	0,3	**G18×26×4**	**SD18×26×4**
19	0,3	**G19×27×4**	**SD19×27×4**
	0,3	**G19×27×4**	**SD19×27×4**



Needle roller bearings with ribs

Without inner ring
Open

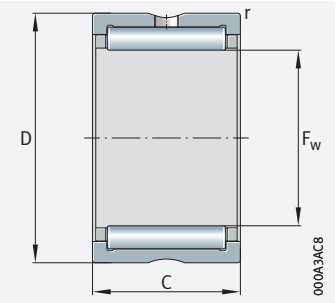

NK, NKS, RNA49, RNA69

F_w = 20 – 29 mm

Main dimensions			Basic load ratings		Fatigue limit load	Limiting speed	Speed rating	Mass	Designation
F_w	D	C	dyn. C_r	stat. C_{0r}	C_{ur}	n_G	$n_{\vartheta r}$	m	➤*892*|*1.12* ➤*893*|*1.13* X-life ➤*886*
			N	N	N	min^{-1}	min^{-1}	≈ g	
20	28	16	18 500	23 900	4 100	21 100	12 100	28,4	**NK20/16-D-XL**
	28	16	14 600	17 500	3 300	21 100	13 200	27	**NK20/16-XL**
	28	20	18 600	23 800	4 200	21 100	12 900	33,9	**NK20/20-XL**
	28	13	12 000	13 600	2 470	21 100	12 000	21,7	**RNA4902-XL**
	28	23	19 500	25 500	4 550	21 100	11 700	39,7	**RNA6902-XL**
	32	20	26 000	25 000	4 500	20 000	11 800	48,7	**NKS20-XL**
21	29	16	15 200	18 700	3 500	20 600	12 600	28,1	**NK21/16-XL**
	29	20	19 300	25 500	4 500	20 600	12 300	35,2	**NK21/20-XL**
22	30	16	15 800	19 900	3 750	20 000	12 000	30	**NK22/16-XL**
	30	20	20 000	27 000	4 800	20 000	11 700	37	**NK22/20-XL**
	30	13	12 400	14 600	2 650	20 000	10 900	22,2	**RNA4903-XL**
	30	23	21 100	29 000	5 200	20 000	10 500	42,4	**RNA6903-XL**
	35	20	27 500	28 000	5 000	18 500	10 900	61,5	**NKS22-XL**
24	32	16	16 900	22 300	4 200	18 500	11 000	31,9	**NK24/16-XL**
	32	20	21 400	30 500	5 400	18 500	10 700	40	**NK24/20-XL**
	37	20	29 500	31 000	5 500	17 200	10 100	65,5	**NKS24-XL**
25	33	16	16 800	22 400	4 200	17 800	10 700	32,6	**NK25/16-XL**
	33	20	21 300	30 500	5 400	17 800	10 400	42	**NK25/20-XL**
	37	17	23 700	25 500	4 700	16 900	9 900	52,3	**RNA4904-XL**
	37	30	40 500	51 000	9 200	16 900	9 500	100	**RNA6904-XL**
	38	20	31 000	33 500	5 900	16 600	9 700	68,1	**NKS25-XL**
26	34	16	17 300	23 600	4 450	17 200	10 300	34	**NK26/16-XL**
	34	20	22 000	32 000	5 700	17 200	10 100	42	**NK26/20-XL**
28	37	20	29 000	41 500	7 500	15 800	8 800	58	**NK28/20-D-XL**
	37	20	24 800	34 000	6 000	15 800	9 300	52,2	**NK28/20-XL**
	37	30	37 000	57 000	10 700	15 800	9 000	82	**NK28/30-XL**
	39	17	26 000	29 500	5 400	15 300	8 600	50,2	**RNA49/22-XL**
	39	30	42 000	55 000	10 000	15 300	8 400	98	**RNA69/22-XL**
	42	20	32 500	36 500	6 500	15 100	8 900	83,6	**NKS28-XL**
29	38	20	27 500	39 000	7 000	15 300	8 700	50	**NK29/20-TV-XL**
	38	30	37 000	57 000	10 700	15 300	8 800	84,3	**NK29/30-XL**

medias *https://www.schaeffler.de/std/1F9A*

[1] For unsealed needle roller bearings, dimensionally matched sealing rings of series G or SD can be used to provide protection against contamination.

Dimensions		Suitable sealing rings[1)]	
F_w	r min.		
20	0,3	**G20×28×4**	**SD20×28×4**
	0,3	**G20×28×4**	**SD20×28×4**
	0,3	**G20×28×4**	**SD20×28×4**
	0,3	**G20×28×4**	**SD20×28×4**
	0,3	**G20×28×4**	**SD20×28×4**
	0,6	–	–
21	0,3	**G21×29×4**	–
	0,3	**G21×29×4**	–
22	0,3	**G22×30×4**	**SD22×30×4**
	0,3	**G22×30×4**	**SD22×30×4**
	0,3	**G22×30×4**	**SD22×30×4**
	0,3	**G22×30×4**	**SD22×30×4**
	0,6	–	–
24	0,3	**G24×32×4**	–
	0,3	**G24×32×4**	–
	0,6	–	–
25	0,3	**G25×33×4**	**SD25×33×4**
	0,3	**G25×33×4**	**SD25×33×4**
	0,3	–	–
	0,3	–	–
	0,6	–	–
26	0,3	**G26×34×4**	**SD26×34×4**
	0,3	**G26×34×4**	**SD26×34×4**
28	0,3	**G28×37×4**	–
	0,3	**G28×37×4**	–
	0,3	**G28×37×4**	–
	0,3	–	–
	0,3	–	–
	0,6	–	–
29	0,3	**G29×38×4**	–
	0,3	**G29×38×4**	–

Needle roller bearings with ribs

Without inner ring
Open

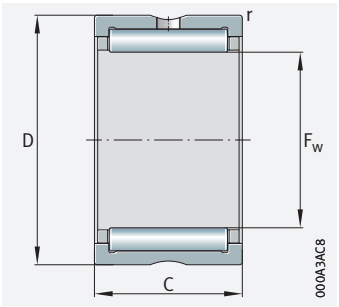

NK, NKS, RNA49, RNA69

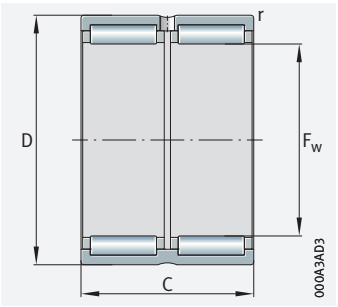

RNA69..-ZW

F_w = 30 – 42 mm

Main dimensions			Basic load ratings		Fatigue limit load	Limiting speed	Speed rating	Mass	Designation
F_w	D	C	dyn. C_r	stat. C_{0r}	C_{ur}	n_G	$n_{\vartheta r}$	m	➤*892*|*1.12* ➤*893*|*1.13* X-life ➤*886*
			N	N	N	min^{-1}	min^{-1}	≈ g	
30	40	20	27 500	35 500	7 400	14 800	8 900	61	**NK30/20-TW-XL**
	40	20	28 000	41 000	7 300	14 800	8 500	61	**NK30/20-TV-XL**
	40	30	42 000	69 000	12 900	14 800	8 200	92,4	**NK30/30-TV-XL**
	42	17	26 500	31 500	5 800	14 400	8 100	61	**RNA4905-XL**
	42	30	44 000	59 000	10 800	14 400	7 900	112	**RNA6905-XL**
	45	22	36 500	40 000	7 000	14 000	8 500	104	**NKS30-XL**
32	42	20	29 500	44 500	8 000	14 000	8 000	64	**NK32/20-TV-XL**
	42	30	39 000	63 000	11 900	14 000	8 200	102	**NK32/30-XL**
	45	17	27 500	33 500	6 200	13 600	7 600	73,2	**RNA49/28-XL**
	45	30	45 500	63 000	11 600	13 600	7 400	135	**RNA69/28-XL**
	47	22	38 000	43 500	7 600	13 200	8 000	110	**NKS32-XL**
35	45	20	31 000	48 500	8 600	12 900	7 400	69,4	**NK35/20-TV-XL**
	45	30	46 000	81 000	15 300	12 900	7 100	106	**NK35/30-TV-XL**
	47	17	28 500	35 500	6 600	12 600	6 900	69,4	**RNA4906-XL**
	47	30	49 000	71 000	13 100	12 600	6 600	126	**RNA6906-XL**
	50	22	39 500	47 000	8 200	12 300	7 400	118	**NKS35-XL**
37	47	20	34 000	56 000	10 000	12 300	6 800	83	**NK37/20-D-XL**
	47	20	28 000	43 500	7 800	12 300	7 400	77	**NK37/20-XL**
	47	30	42 000	73 000	13 700	12 300	7 200	113	**NK37/30-XL**
	52	22	41 500	50 000	8 800	11 700	7 100	123	**NKS37-XL**
38	48	20	29 000	45 000	8 100	12 000	7 200	79,4	**NK38/20-XL**
	48	30	43 000	76 000	14 300	12 000	7 000	116	**NK38/30-XL**
40	50	20	33 500	56 000	10 000	11 400	6 500	78	**NK40/20-TV-XL**
	50	30	44 000	79 000	14 900	11 400	6 700	125	**NK40/30-XL**
	52	20	34 500	47 500	9 100	11 100	6 400	89,1	**RNA49/32-XL**
	52	36	53 000	82 000	15 400	11 100	6 500	162	**RNA69/32-ZW-XL**
	55	22	42 500	54 000	9 400	10 900	6 600	129	**NKS40-XL**
42	52	20	30 000	49 000	8 800	10 900	6 600	85,8	**NK42/20-XL**
	52	30	44 500	82 000	15 500	10 900	6 400	130	**NK42/30-XL**
	55	20	35 500	50 000	9 600	10 700	6 100	107	**RNA4907-XL**
	55	36	54 000	86 000	16 200	10 700	6 200	193	**RNA6907-ZW-XL**

medias *https://www.schaeffler.de/std/1F9A*

[1] For unsealed needle roller bearings, dimensionally matched sealing rings of series G or SD can be used to provide protection against contamination.

Dimensions		Suitable sealing rings[1)]	
F_w	r min.		
30	0,3	**G30×40×4**	**SD30×40×4**
	0,3	**G30×40×4**	**SD30×40×4**
	0,3	**G30×40×4**	**SD30×40×4**
	0,3	–	–
	0,3	–	–
	0,6	–	–
32	0,3	**G32×42×4**	**SD32×42×4**
	0,3	**G32×42×4**	**SD32×42×4**
	0,3	**G32×45×4**	–
	0,3	**G32×45×4**	–
	0,6	–	–
35	0,3	**G35×45×4**	**SD35×45×4**
	0,3	**G35×45×4**	**SD35×45×4**
	0,3	–	–
	0,3	–	–
	0,6	–	–
37	0,3	**G37×47×4**	**SD37×47×4**
	0,3	**G37×47×4**	**SD37×47×4**
	0,3	**G37×47×4**	**SD37×47×4**
	0,6	–	–
38	0,3	**G38×48×4**	**SD38×48×4**
	0,3	**G38×48×4**	**SD38×48×4**
40	0,3	**G40×50×4**	**SD40×50×4**
	0,3	**G40×50×4**	**SD40×50×4**
	0,6	**G40×52×5**	**SD40×52×5**
	0,6	**G40×52×5**	**SD40×52×5**
	0,6	–	–
42	0,3	**G42×52×4**	**SD42×52×4**
	0,3	**G42×52×4**	**SD42×52×4**
	0,6	–	–
	0,6	–	–



Needle roller bearings with ribs

Without inner ring
Open

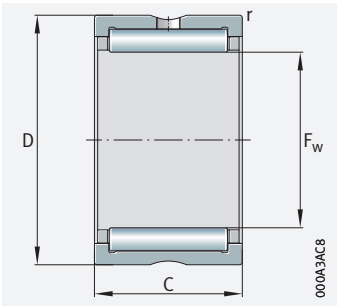

NK, NKS, RNA49

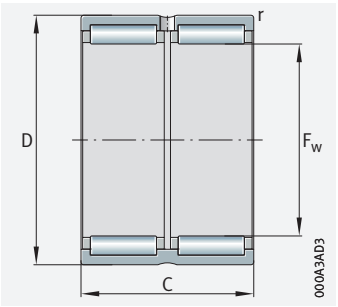

RNA69..-ZW

F_w = 43 – 65 mm

Main dimensions			Basic load ratings		Fatigue limit load	Limiting speed	Speed rating	Mass	Designation
F_w	D	C	dyn. C_r	stat. C_{0r}	C_{ur}	n_G	$n_{\vartheta r}$	m	➤*892*|*1.12* ➤*893*|*1.13* X-life ➤*886*
			N	N	N	min^{-1}	min^{-1}	≈ g	
43	53	20	30 500	51 000	9 100	10 700	6 500	86	**NK43/20-XL**
	53	30	45 500	85 000	16 100	10 700	6 300	133	**NK43/30-XL**
	58	22	44 000	57 000	10 000	10 200	6 200	139	**NKS43-XL**
45	55	20	35 000	62 000	11 000	10 200	5 900	85,3	**NK45/20-TV-XL**
	55	30	52 000	103 000	19 500	10 200	5 700	132	**NK45/30-TV-XL**
	60	22	45 500	60 000	10 600	9 800	6 000	145	**NKS45-XL**
47	57	20	32 500	56 000	10 100	9 800	6 000	94,5	**NK47/20-XL**
	57	30	48 500	94 000	17 800	9 800	5 800	142	**NK47/30-XL**
48	62	22	48 500	67 000	11 700	9 200	5 300	140	**RNA4908-XL**
	62	40	74 000	116 000	19 800	9 200	5 400	256	**RNA6908-ZW-XL**
50	62	25	48 500	87 000	15 000	9 200	5 400	146	**NK50/25-TV-XL**
	62	35	67 000	132 000	24 300	9 200	5 200	207	**NK50/35-TV-XL**
	65	22	48 000	67 000	11 800	8 900	5 500	157	**NKS50-XL**
52	68	22	51 000	73 000	12 900	8 600	4 900	182	**RNA4909-XL**
	68	40	79 000	127 000	21 800	8 600	4 950	338	**RNA6909-ZW-XL**
55	68	25	57 000	111 000	19 700	8 400	4 700	195	**NK55/25-D-XL**
	68	25	45 500	82 000	14 300	8 400	5 200	180	**NK55/25-XL**
	68	35	60 000	118 000	21 600	8 400	5 200	250	**NK55/35-XL**
	72	22	51 000	74 000	13 000	8 200	5 100	221	**NKS55-XL**
58	72	22	53 000	80 000	14 100	7 800	4 350	163	**RNA4910-XL**
	72	40	82 000	139 000	23 800	7 800	4 400	310	**RNA6910-ZW-XL**
60	72	25	53 000	103 000	17 800	7 700	4 600	170	**NK60/25-TV-XL**
	72	35	63 000	130 000	23 900	7 700	4 800	258	**NK60/35-XL**
	80	28	71 000	98 000	17 600	7 400	4 750	335	**NKS60-XL**
63	80	25	65 000	100 000	17 600	7 200	4 150	255	**RNA4911-XL**
	80	45	102 000	176 000	30 500	7 200	4 200	470	**RNA6911-ZW-XL**
65	78	25	50 000	98 000	17 000	7 200	4 500	221	**NK65/25-XL**
	78	35	66 000	142 000	26 000	7 200	4 450	310	**NK65/35-XL**
	85	28	75 000	108 000	19 400	6 900	4 400	356	**NKS65-XL**

medias *https://www.schaeffler.de/std/1F9A*

[1] For unsealed needle roller bearings, dimensionally matched sealing rings of series G or SD can be used to provide protection against contamination.

Dimensions		Suitable sealing rings[1)]	
F_w	r min.		
43	0,3	**G43×53×4**	–
	0,3	**G43×53×4**	–
	0,6	–	–
45	0,3	**G45×55×4**	**SD45×55×4**
	0,3	**G45×55×4**	**SD45×55×4**
	0,6	–	–
47	0,3	–	–
	0,3	–	–
48	0,6	–	–
	0,6	–	–
50	0,6	**G50×62×5**	**SD50×62×5**
	0,6	**G50×62×5**	**SD50×62×5**
	1	–	–
52	0,6	–	–
	0,6	–	–
55	0,6	–	–
	0,6	–	–
	0,6	–	–
	1	–	–
58	0,6	–	–
	0,6	–	–
60	0,6	–	–
	0,6	–	–
	1,1	–	–
63	1	–	–
	1	–	–
65	0,6	–	–
	0,6	–	–
	1,1	–	–



Needle roller bearings with ribs

Without inner ring
Open

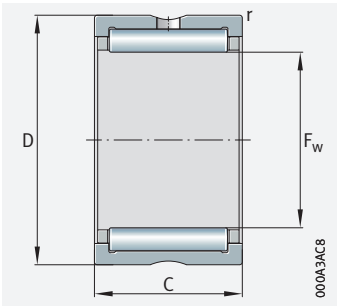

NK, NKS, RNA48, RNA49

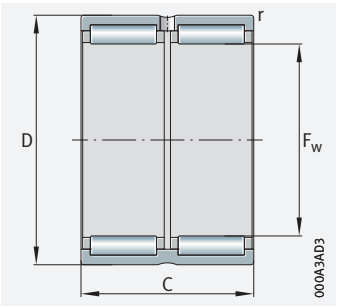

RNA69..-ZW

F_w = 68 – 240 mm

Main dimensions			Basic load ratings		Fatigue limit load	Limiting speed	Speed rating	Mass	Designation	Dimensions
F_w	D	C	dyn. C_r	stat. C_{0r}	C_{ur}	n_G	$n_{\vartheta r}$	m	➤892|1.12 ➤893|1.13 X-life ➤886	r
			N	N	N	min^{-1}	min^{-1}	≈ g		min.
68	82	25	49 500	89 000	15 500	6 800	4 500	241	**NK68/25-XL**	0,6
	82	35	70 000	139 000	26 000	6 800	4 350	338	**NK68/35-XL**	0,6
	85	25	68 000	108 000	19 100	6 700	3 850	275	**RNA4912-XL**	1
	85	45	106 000	191 000	33 000	6 700	3 850	488	**RNA6912-ZW-XL**	1
70	85	25	50 000	92 000	16 000	6 600	4 450	260	**NK70/25-XL**	0,6
	85	35	71 000	144 000	27 000	6 600	4 300	370	**NK70/35-XL**	0,6
	90	28	77 000	113 000	20 400	6 400	4 200	380	**NKS70-XL**	1,1
72	90	25	69 000	112 000	19 900	6 300	3 650	312	**RNA4913-XL**	1
	90	45	108 000	198 000	34 500	6 300	3 650	580	**RNA6913-ZW-XL**	1
73	90	25	60 000	100 000	17 900	6 300	4 150	302	**NK73/25-XL**	1
	90	35	85 000	156 000	27 500	6 300	4 050	428	**NK73/35-XL**	1
75	92	25	61 000	104 000	18 500	6 100	4 050	315	**NK75/25-XL**	1
	92	35	87 000	162 000	28 500	6 100	3 950	445	**NK75/35-XL**	1
	95	28	81 000	123 000	22 200	6 000	3 950	402	**NKS75-XL**	1,1
80	95	25	63 000	119 000	20 000	5 800	3 750	301	**NK80/25-XL**	1
	95	35	89 000	184 000	33 000	5 800	3 650	425	**NK80/35-XL**	1
	100	30	95 000	156 000	28 000	5 700	3 400	460	**RNA4914-XL**	1
	100	54	145 000	265 000	48 000	5 700	3 450	857	**RNA6914-ZW-XL**	1
85	105	25	78 000	123 000	22 100	5 400	3 550	425	**NK85/25-XL**	1
	105	35	111 000	193 000	35 000	5 400	3 450	600	**NK85/35-XL**	1
	105	30	97 000	162 000	29 000	5 400	3 200	489	**RNA4915-XL**	1
	105	54	147 000	275 000	50 000	5 400	3 250	935	**RNA6915-ZW-XL**	1
90	110	25	81 000	132 000	23 700	5 100	3 400	450	**NK90/25-XL**	1
	110	35	116 000	208 000	38 000	5 100	3 250	630	**NK90/35-XL**	1
	110	30	101 000	174 000	31 000	5 100	3 000	516	**RNA4916-XL**	1
	110	54	153 000	300 000	54 000	5 100	3 050	987	**RNA6916-ZW-XL**	1
95	115	26	83 000	137 000	24 500	4 850	3 300	490	**NK95/26-XL**	1
	115	36	121 000	223 000	40 500	4 850	3 150	680	**NK95/36-XL**	1

medias *https://www.schaeffler.de/std/1F9A*

Main dimensions			Basic load ratings		Fatigue limit load	Limiting speed	Speed rating	Mass	Designation	Dimensions
F_w	D	C	dyn. C_r	stat. C_{0r}	C_{ur}	n_G	$n_{\vartheta r}$	m	➤892|1.12 ➤893|1.13 X-life ➤886	r
			N	N	N	min^{-1}	min^{-1}	≈ g		min.
100	120	26	86 000	146 000	25 500	4 600	3 150	515	**NK100/26-XL**	1
	120	36	125 000	237 000	42 500	4 600	3 000	715	**NK100/36-XL**	1
	120	35	125 000	237 000	42 500	4 600	2 800	657	**RNA4917-XL**	1,1
	120	63	188 000	400 000	72 000	4 600	2 850	1 200	**RNA6917-ZW-XL**	1,1
105	125	26	89 000	155 000	27 000	4 400	3 050	540	**NK105/26-XL**	1
	125	36	129 000	250 000	44 500	4 400	2 850	713	**NK105/36-XL**	1
	125	35	129 000	250 000	44 500	4 400	2 650	745	**RNA4918-XL**	1,1
	125	63	195 000	425 000	76 000	4 400	2 700	1 330	**RNA6918-ZW-XL**	1,1
110	130	30	111 000	210 000	36 000	4 200	2 800	650	**NK110/30-XL**	1,1
	130	40	143 000	290 000	51 000	4 200	2 750	830	**NK110/40-XL**	1,1
	130	35	131 000	260 000	45 000	4 200	2 500	719	**RNA4919-XL**	1,1
	130	63	197 000	440 000	77 000	4 200	2 550	1 460	**RNA6919-ZW-XL**	1,1
115	140	40	144 000	270 000	46 000	4 000	2 650	1 150	**RNA4920-XL**	1,1
120	140	30	106 000	216 000	36 500	3 900	2 340	670	**RNA4822-XL**	1
125	150	40	149 000	290 000	48 000	3 700	2 430	1 240	**RNA4922-XL**	1,1
130	150	30	112 000	239 000	39 500	3 600	2 120	730	**RNA4824-XL**	1
135	165	45	205 000	390 000	65 000	3 400	2 250	1 860	**RNA4924-XL**	1,1
145	165	35	134 000	310 000	49 500	3 250	2 000	990	**RNA4826-XL**	1,1
150	180	50	229 000	470 000	76 000	3 100	2 080	2 210	**RNA4926-XL**	1,5
155	175	35	136 000	325 000	51 000	3 050	1 870	1 050	**RNA4828-XL**	1,1
160	190	50	237 000	500 000	79 000	2 900	1 910	2 350	**RNA4928-XL**	1,5
165	190	40	172 000	400 000	63 000	2 850	1 830	1 600	**RNA4830-XL**	1,1
175	200	40	181 000	435 000	67 000	2 700	1 700	1 700	**RNA4832-XL**	1,1
185	215	45	209 000	510 000	76 000	2 550	1 640	2 540	**RNA4834-XL**	1,1
195	225	45	219 000	550 000	81 000	2 420	1 510	2 680	**RNA4836-XL**	1,1
210	240	50	255 000	690 000	102 000	2 250	1 360	3 210	**RNA4838-XL**	1,5
220	250	50	260 000	720 000	104 000	2 150	1 280	3 350	**RNA4840-XL**	1,5
240	270	50	275 000	790 000	112 000	1 980	1 130	3 620	**RNA4844-XL**	1,5

medias *https://www.schaeffler.de/std/1F9A*

Needle roller bearings with ribs

Without inner ring
Open

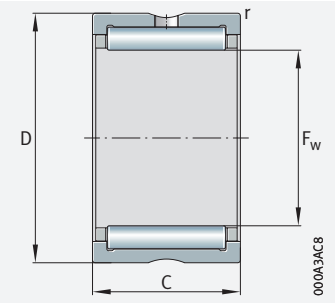

RNA48

F_w = 265 – 415 mm

Main dimensions			Basic load ratings		Fatigue limit load	Limiting speed	Speed rating	Mass	Designation	Dimensions
F_w	D	C	dyn. C_r	stat. C_{0r}	C_{ur}	n_G	$n_{\vartheta r}$	m	➤892|1.12 ➤893|1.13 X-life ➤886	r
			N	N	N	min^{-1}	min^{-1}	≈ g		min.
265	300	60	400 000	1 080 000	153 000	1 780	980	5 400	**RNA4848-XL**	2
285	320	60	415 000	1 160 000	161 000	1 660	890	5 800	**RNA4852-XL**	2
305	350	69	510 000	1 300 000	178 000	1 540	850	9 300	**RNA4856-XL**	2
330	380	80	700 000	1 770 000	239 000	1 420	740	12 700	**RNA4860-XL**	2,1
350	400	80	710 000	1 850 000	246 000	1 340	680	13 400	**RNA4864-XL**	2,1
370	420	80	730 000	1 940 000	255 000	1 270	640	14 000	**RNA4868-XL**	2,1
390	440	80	740 000	2 020 000	260 000	1 210	600	14 800	**RNA4872-XL**	2,1
415	480	100	1 130 000	2 900 000	375 000	1 130	520	26 000	**RNA4876-XL**	2,1

medias *https://www.schaeffler.de/std/1F9A*





Needle roller bearings with ribs

With inner ring
Open

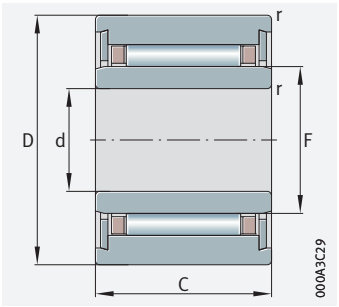

NKI (d ≦ 7 mm)

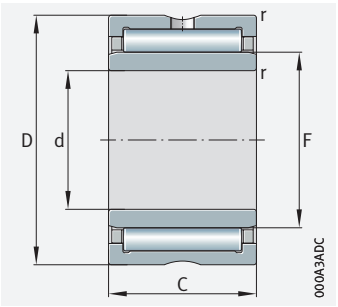

NKI (d ≧ 9 mm), NKIS, NA49, NA69 (d ≦ 30 mm)

d = 5 – 35 mm

Main dimensions			Basic load ratings		Fatigue limit load	Limiting speed	Speed rating	Mass	Designation	Dimensions		
d	D	B	dyn. C_r	stat. C_{0r}	C_{ur}	n_G	$n_{\vartheta r}$	m	➤892|1.12 ➤893|1.13 X-life ➤886	F	r	s
			N	N	N	min^{-1}	min^{-1}	≈ g			min.	
5	15	12	4 450	4 100	700	32 500	32 500	11,5	**NKI5/12-TV-XL**[1]	8	0,3	1,5
	15	16	5 800	5 800	990	32 500	32 000	15,3	**NKI5/16-TV-XL**[1]	8	0,3	2
6	16	12	5 100	5 000	860	31 000	28 500	13,5	**NKI6/12-TV-XL**[1]	9	0,3	1,5
	16	16	6 600	7 100	1 210	31 000	28 000	17,4	**NKI6/16-TV-XL**[1]	9	0,3	2
7	17	12	5 300	5 500	940	29 500	26 000	13,7	**NKI7/12-TV-XL**[1]	10	0,3	1,5
	17	16	7 000	7 800	1 330	29 500	25 500	18,2	**NKI7/16-TV-XL**[1]	10	0,3	2
9	19	12	7 200	7 100	1 310	26 500	20 200	16,6	**NKI9/12-XL**	12	0,3	1,5
	19	16	10 100	11 000	1 950	26 500	19 500	21,9	**NKI9/16-XL**	12	0,3	2
10	22	16	11 400	11 500	2 140	24 600	16 400	29,4	**NKI10/16-XL**	14	0,3	0,5
	22	20	14 500	15 600	2 750	24 600	16 100	37,1	**NKI10/20-XL**	14	0,3	0,5
	22	13	9 600	9 200	1 660	24 600	16 400	23	**NA4900-XL**	14	0,3	0,5
12	24	16	12 800	13 900	2 600	23 200	14 500	33,3	**NKI12/16-XL**	16	0,3	0,5
	24	20	16 300	18 800	3 350	23 200	14 200	41,9	**NKI12/20-XL**	16	0,3	0,5
	24	13	10 600	10 900	1 970	23 200	14 200	26	**NA4901-XL**	16	0,3	0,5
	24	22	18 100	21 600	3 850	23 200	13 300	46	**NA6901-XL**	16	0,3	1
15	27	16	14 700	17 400	3 250	21 600	12 400	38,8	**NKI15/16-XL**	19	0,3	0,5
	27	20	18 700	23 600	4 200	21 600	12 100	48,7	**NKI15/20-XL**	19	0,3	0,5
	28	13	12 000	13 600	2 470	21 100	11 200	34	**NA4902-XL**	20	0,3	0,5
	28	23	19 500	25 500	4 550	21 100	10 900	63,6	**NA6902-XL**	20	0,3	1
	35	20	27 500	28 000	5 000	18 500	9 400	92	**NKIS15-XL**	22	0,6	0,5
17	29	16	15 200	18 700	3 500	20 600	11 400	42,4	**NKI17/16-XL**	21	0,3	0,5
	29	20	19 300	25 500	4 500	20 600	11 200	53,4	**NKI17/20-XL**	21	0,3	0,5
	30	13	12 400	14 600	2 650	20 000	10 200	37	**NA4903-XL**	22	0,3	0,5
	30	23	21 100	29 000	5 200	20 000	9 800	72	**NA6903-XL**	22	0,3	1
	37	20	29 500	31 000	5 500	17 200	8 800	98	**NKIS17-XL**	24	0,6	0,5
20	32	16	16 900	22 300	4 200	18 500	10 100	49	**NKI20/16-XL**	24	0,3	0,5
	32	20	21 400	30 500	8 100	18 500	9 900	61	**NKI20/20-XL**	24	0,3	0,5
	37	17	23 700	25 500	4 700	16 900	9 400	75,2	**NA4904-XL**	25	0,3	0,8
	37	30	40 500	51 000	9 200	16 900	8 900	141	**NA6904-XL**	25	0,3	1
	42	20	32 500	36 500	6 500	15 100	7 700	129	**NKIS20-XL**	28	0,6	0,5

medias *https://www.schaeffler.de/std/1F9A*

[1] With closing rings, without lubrication hole and groove.

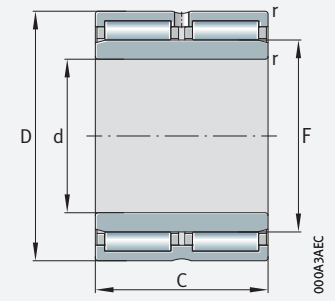

NA69..-ZW

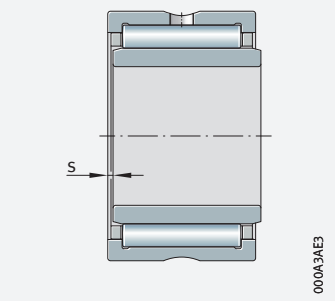

Axial displacement “s”

Main dimensions			Basic load ratings		Fatigue limit load	Limiting speed	Speed rating	Mass	Designation	Dimensions		
d	D	B	dyn. C_r	stat. C_{0r}	C_{ur}	n_G	$n_{\vartheta r}$	m	➤*892*|*1.12* ➤*893*|*1.13* X-life ➤*886*	F	r	s
			N	N	N	min^{-1}	min^{-1}	≈ g			min.	
22	34	16	17 300	23 600	4 450	17 200	9 500	52	**NKI22/16-XL**	26	0,3	0,5
	34	20	22 000	32 000	5 700	17 200	9 300	65,4	**NKI22/20-XL**	26	0,3	0,5
	39	17	26 000	29 500	5 400	15 300	8 100	80	**NA49/22-XL**	28	0,3	0,8
	39	30	42 000	55 000	10 000	15 300	7 900	150	**NA69/22-XL**	28	0,3	0,5
25	38	20	27 500	39 000	7 000	15 300	8 100	75,8	**NKI25/20-TV-XL**	29	0,3	1
	38	30	37 000	57 000	10 700	15 300	8 200	124	**NKI25/30-XL**	29	0,3	1,5
	42	17	26 500	31 500	5 800	14 400	7 700	88	**NA4905-XL**	30	0,3	0,8
	42	30	44 000	59 000	10 800	14 400	7 500	161	**NA6905-XL**	30	0,3	1
	47	22	38 000	43 500	7 600	13 200	7 100	162	**NKIS25-XL**	32	0,6	1
28	42	20	29 500	44 500	8 000	14 000	7 500	92,4	**NKI28/20-TV-XL**	32	0,3	1
	42	30	39 000	63 000	11 900	14 000	7 600	146	**NKI28/30-XL**	32	0,3	1,5
	45	17	27 500	33 500	6 200	13 600	7 400	97,7	**NA49/28-XL**	32	0,3	0,8
	45	30	45 500	63 000	11 600	13 600	7 100	182	**NA69/28-XL**	32	0,3	1
30	45	20	31 000	48 500	8 600	12 900	6 800	108	**NKI30/20-TV-XL**	35	0,3	0,5
	45	30	46 000	81 000	15 300	12 900	6 600	165	**NKI30/30-TV-XL**	35	0,3	1
	47	17	28 500	35 500	6 600	12 600	6 600	101	**NA4906-XL**	35	0,3	0,8
	47	30	49 000	71 000	13 100	12 600	6 300	192	**NA6906-XL**	35	0,3	1
	52	22	41 500	50 000	8 800	11 700	6 400	184	**NKIS30-XL**	37	0,6	1
32	47	20	28 000	43 500	7 800	12 300	6 900	118	**NKI32/20-XL**	37	0,3	0,5
	47	30	42 000	73 000	13 700	12 300	6 600	180	**NKI32/30-XL**	37	0,3	1
	52	20	34 500	47 500	9 100	11 100	6 000	158	**NA49/32-XL**	40	0,6	0,8
	52	36	53 000	82 000	15 400	11 100	6 100	288	**NA69/32-ZW-XL**	40	0,6	0,5
35	50	20	32 500	48 500	10 100	11 400	6 900	122	**NKI35/20-TW-XL**	40	0,3	0,5
	50	20	33 500	56 000	10 000	11 400	6 100	122	**NKI35/20-TV-XL**	40	0,3	0,5
	50	30	44 000	79 000	14 900	11 400	6 200	193	**NKI35/30-XL**	40	0,3	1
	55	20	35 500	50 000	9 600	10 700	5 800	170	**NA4907-XL**	42	0,6	0,8
	55	36	54 000	86 000	16 200	10 700	5 900	310	**NA6907-ZW-XL**	42	0,6	0,5
	58	22	44 000	57 000	10 000	10 200	5 600	220	**NKIS35-XL**	43	0,6	0,5

medias *https://www.schaeffler.de/std/1F9A*

Needle roller bearings with ribs

With inner ring
Open

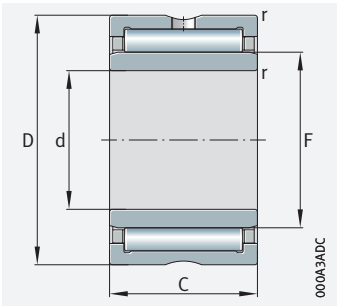

NKI, NKIS, NA49

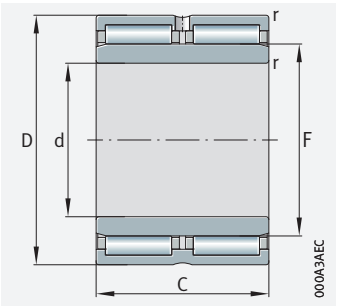

NA69..-ZW

d = 38 – 95 mm

Main dimensions			Basic load ratings		Fatigue limit load	Limiting speed	Speed rating	Mass	Designation	Dimensions		
d	D	B	dyn. C_r	stat. C_{0r}	C_{ur}	n_G	$n_{\vartheta r}$	m	➤892|1.12 ➤893|1.13 X-life ➤886	F	r	s
			N	N	N	min^{-1}	min^{-1}	≈ g			min.	
38	53	20	30 500	51 000	9 100	10 700	6 000	136	**NKI38/20-XL**	43	0,3	0,5
	53	30	45 500	85 000	16 100	10 700	5 900	207	**NKI38/30-XL**	43	0,3	1
40	55	20	35 000	62 000	11 000	10 200	5 600	136	**NKI40/20-TV-XL**	45	0,3	0,5
	55	30	54 000	97 000	18 600	10 200	5 900	216	**NKI40/30-TW-XL**	45	0,3	1
	55	30	52 000	103 000	19 500	10 200	5 400	216	**NKI40/30-TV-XL**	45	0,3	1
	62	22	48 500	67 000	11 700	9 200	5 000	230	**NA4908-XL**	48	0,6	1
	62	40	74 000	116 000	19 800	9 200	5 100	430	**NA6908-ZW-XL**	48	0,6	0,5
	65	22	48 000	67 000	11 800	8 900	4 850	281	**NKIS40-XL**	50	1	0,5
42	57	20	32 500	56 000	10 100	9 800	5 600	148	**NKI42/20-XL**	47	0,3	0,5
	57	30	48 500	94 000	17 800	9 800	5 400	222	**NKI42/30-XL**	47	0,3	1
45	62	25	48 500	87 000	15 000	9 200	5 100	217	**NKI45/25-TV-XL**	50	0,6	1,5
	62	35	67 000	132 000	24 300	9 200	4 950	308	**NKI45/35-TV-XL**	50	0,6	2
	68	22	51 000	73 000	12 900	8 600	4 700	271	**NA4909-XL**	52	0,6	1
	68	40	79 000	127 000	21 800	8 600	4 750	495	**NA6909-ZW-XL**	52	0,6	0,5
	72	22	51 000	74 000	13 000	8 200	4 600	336	**NKIS45-XL**	55	1	0,5
50	68	25	45 500	82 000	14 300	8 400	4 950	270	**NKI50/25-XL**	55	0,6	1,5
	68	35	60 000	118 000	21 600	8 400	4 900	379	**NKI50/35-XL**	55	0,6	2
	72	22	53 000	80 000	14 100	7 800	4 150	274	**NA4910-XL**	58	0,6	1
	72	40	82 000	139 000	23 800	7 800	4 200	515	**NA6910-ZW-XL**	58	0,6	0,5
	80	28	71 000	98 000	17 600	7 400	4 250	518	**NKIS50-XL**	60	1,1	2
55	72	25	52 000	92 000	17 400	7 700	4 900	255	**NKI55/25-TW-XL**	60	0,6	1,5
	72	25	53 000	103 000	17 800	7 700	4 400	255	**NKI55/25-TV-XL**	60	0,6	1,5
	72	35	63 000	130 000	23 900	7 700	4 550	379	**NKI55/35-XL**	60	0,6	2
	80	25	65 000	100 000	17 600	7 200	4 000	393	**NA4911-XL**	63	1	1,5
	80	45	102 000	176 000	30 500	7 200	4 000	780	**NA6911-ZW-XL**	63	1	1,5
	85	28	75 000	108 000	19 400	6 900	4 000	558	**NKIS55-XL**	65	1,1	2
60	82	25	49 500	89 000	15 500	6 800	4 200	394	**NKI60/25-XL**	68	0,6	1
	82	35	70 000	139 000	26 000	6 800	4 050	553	**NKI60/35-XL**	68	0,6	1
	85	25	68 000	108 000	19 100	6 700	3 700	426	**NA4912-XL**	68	1	1,5
	85	45	106 000	191 000	33 000	6 700	3 700	808	**NA6912-ZW-XL**	68	1	1,5
	90	28	77 000	113 000	20 400	6 400	3 800	560	**NKIS60-XL**	70	1,1	2

medias *https://www.schaeffler.de/std/1F9A*

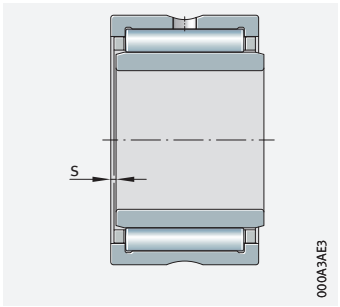

Axial displacement "s"

Main dimensions			Basic load ratings		Fatigue limit load	Limiting speed	Speed rating	Mass	Designation	Dimensions		
d	D	B	dyn. C_r	stat. C_{0r}	C_{ur}	n_G	$n_{\vartheta r}$	m	➤*892*|*1.12* ➤*893*|*1.13* X-life ➤*886*	F	r	s
			N	N	N	min^{-1}	min^{-1}	≈ g			min.	
65	90	25	60 000	100 000	17 900	6 300	3 900	467	**NKI65/25-XL**	73	1	1
	90	35	85 000	156 000	27 500	6 300	3 750	659	**NKI65/35-XL**	73	1	1
	90	25	69 000	112 000	19 900	6 300	3 500	456	**NA4913-XL**	72	1	1,5
	90	45	108 000	198 000	34 500	6 300	3 550	833	**NA6913-ZW-XL**	72	1	1,5
	95	28	81 000	123 000	22 200	6 000	3 600	641	**NKIS65-XL**	75	1,1	2
70	95	25	63 000	119 000	20 000	5 800	3 500	521	**NKI70/25-XL**	80	1	0,8
	95	35	89 000	184 000	33 000	5 800	3 350	737	**NKI70/35-XL**	80	1	0,8
	100	30	95 000	156 000	28 000	5 700	3 250	728	**NA4914-XL**	80	1	1,5
	100	54	145 000	265 000	48 000	5 700	3 300	1 340	**NA6914-ZW-XL**	80	1	1
75	105	25	78 000	123 000	22 100	5 400	3 300	641	**NKI75/25-XL**	85	1	1
	105	35	111 000	193 000	35 000	5 400	3 200	908	**NKI75/35-XL**	85	1	1
	105	30	97 000	162 000	29 000	5 400	3 100	775	**NA4915-XL**	85	1	1,5
	105	54	147 000	275 000	50 000	5 400	3 150	1 450	**NA6915-ZW-XL**	85	1	1
80	110	25	81 000	132 000	23 700	5 100	3 150	677	**NKI80/25-XL**	90	1	1
	110	35	116 000	208 000	38 000	5 100	3 050	959	**NKI80/35-XL**	90	1	1
	110	30	101 000	174 000	31 000	5 100	2 900	878	**NA4916-XL**	90	1	1,5
	110	54	153 000	300 000	54 000	5 100	2 900	1 522	**NA6916-ZW-XL**	90	1	1
85	115	26	83 000	137 000	24 500	4 850	3 100	743	**NKI85/26-XL**	95	1	1,5
	115	36	121 000	223 000	40 500	4 850	2 950	1 040	**NKI85/36-XL**	95	1	1,5
	120	35	125 000	237 000	42 500	4 600	2 650	1 250	**NA4917-XL**	100	1,1	1
	120	63	188 000	400 000	72 000	4 600	2 700	2 200	**NA6917-ZW-XL**	100	1,1	1
90	120	26	86 000	146 000	25 500	4 600	2 950	778	**NKI90/26-XL**	100	1	1,5
	120	36	125 000	237 000	42 500	4 600	2 800	1 090	**NKI90/36-XL**	100	1	1,5
	125	35	129 000	250 000	44 500	4 400	2 500	1 312	**NA4918-XL**	105	1,1	1
	125	63	195 000	425 000	76 000	4 400	2 550	2 310	**NA6918-ZW-XL**	105	1,1	1
95	125	26	89 000	155 000	27 000	4 400	2 850	816	**NKI95/26-XL**	105	1	1,5
	125	36	129 000	250 000	44 500	4 400	2 700	1 145	**NKI95/36-XL**	105	1	1,5
	130	35	131 000	260 000	45 000	4 200	2 400	1 371	**NA4919-XL**	110	1,1	1
	130	63	197 000	440 000	77 000	4 200	2 440	2 500	**NA6919-ZW-XL**	110	1,1	1

medias *https://www.schaeffler.de/std/1F9A*

Needle roller bearings with ribs

With inner ring
Open

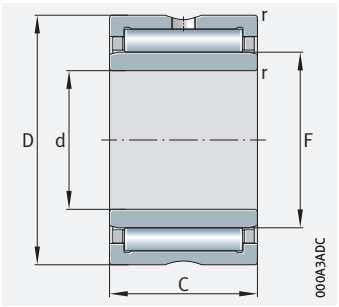

NKI, NA49, NA48

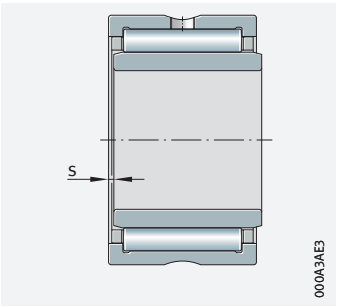

Axial displacement “s”

d = 100 – 380 mm

Main dimensions			Basic load ratings		Fatigue limit load	Limiting speed	Speed rating	Mass	Designation	Dimensions		
d	D	B	dyn. C_r	stat. C_{0r}	C_{ur}	n_G	$n_{\vartheta r}$	m	➤*892*|*1.12* ➤*893*|*1.13* X-life ➤*886*	F	r	s
			N	N	N	min^{-1}	min^{-1}	≈ g			min.	
100	130	30	111 000	210 000	36 000	4 200	2 650	990	**NKI100/30-XL**	110	1,1	1,5
	130	40	143 000	290 000	51 000	4 200	2 600	1 330	**NKI100/40-XL**	110	1,1	2
	140	40	144 000	270 000	46 000	4 000	2 550	1 900	**NA4920-XL**	115	1,1	2
110	150	40	149 000	290 000	48 000	3 700	2 330	2 070	**NA4922-XL**	125	1,1	2
	140	30	106 000	216 000	36 500	3 900	2 270	1 080	**NA4822-XL**	120	1	0,8
120	165	45	205 000	390 000	65 000	3 400	2 160	2 860	**NA4924-XL**	135	1,1	2
	150	30	112 000	239 000	39 500	3 600	2 070	1 170	**NA4824-XL**	130	1	0,8
130	180	50	229 000	470 000	76 000	3 100	2 000	3 900	**NA4926-XL**	150	1,5	1,5
	165	35	134 000	310 000	49 500	3 250	1 930	1 810	**NA4826-XL**	145	1,1	1
140	190	50	237 000	500 000	79 000	2 900	1 860	4 150	**NA4928-XL**	160	1,5	1,5
	175	35	136 000	325 000	51 000	3 050	1 810	1 920	**NA4828-XL**	155	1,1	1
150	190	40	172 000	400 000	63 000	2 850	1 780	2 720	**NA4830-XL**	165	1,1	1,5
160	200	40	181 000	435 000	67 000	2 700	1 650	2 890	**NA4832-XL**	175	1,1	1,5
170	215	45	209 000	510 000	76 000	2 550	1 610	3 960	**NA4834-XL**	185	1,1	1,5
180	225	45	219 000	550 000	81 000	2 420	1 490	4 200	**NA4836-XL**	195	1,1	1,5
190	240	50	255 000	690 000	102 000	2 250	1 330	5 610	**NA4838-XL**	210	1,5	1,5
200	250	50	260 000	720 000	104 000	2 150	1 250	5 840	**NA4840-XL**	220	1,5	1,5
220	270	50	275 000	790 000	112 000	1 980	1 110	6 380	**NA4844-XL**	240	1,5	1,5
240	300	60	400 000	1 080 000	153 000	1 780	960	10 000	**NA4848-XL**	265	2	2
260	320	60	415 000	1 160 000	161 000	1 660	870	10 600	**NA4852-XL**	285	2	2
280	350	69	510 000	1 300 000	178 000	1 540	840	15 300	**NA4856-XL**	305	2	2,5
300	380	80	700 000	1 770 000	239 000	1 420	720	21 800	**NA4860-XL**	330	2,1	2
320	400	80	710 000	1 850 000	246 000	1 340	670	23 000	**NA4864-XL**	350	2,1	2
340	420	80	730 000	1 940 000	255 000	1 270	620	24 200	**NA4868-XL**	370	2,1	2
360	440	80	740 000	2 020 000	260 000	1 210	590	25 600	**NA4872-XL**	390	2,1	2
380	480	100	1 130 000	2 900 000	375 000	1 130	510	42 600	**NA4876-XL**	415	2,1	2

medias *https://www.schaeffler.de/std/1F9A*



Needle roller bearings with ribs

Without inner ring
Sealed

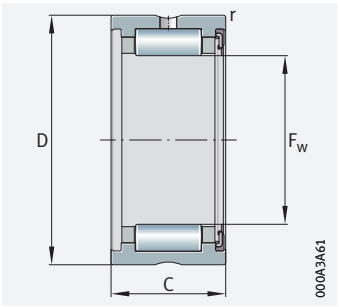

Sealed on one side (-RSR)

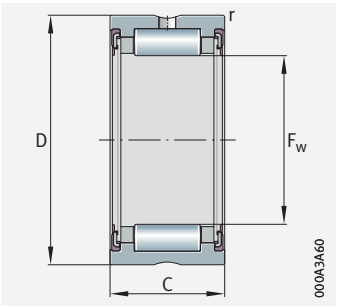

Sealed on both sides (-2RSR)

F_w = 14 – 58 mm

Main dimensions			Basic load ratings		Fatigue limit load	Limiting speed	Mass	Designation		Dimensions
F_w	D	C	dyn. C_r	stat. C_{0r}	C_{ur}	n_G grease	m	➤*892*|*1.12* ➤*893*|*1.13* X-life ➤*886*		r
			N	N	N	min^{-1}	≈ g			min.
14	22	13	7 700	6 900	1 390	14 800	16	**RNA4900-RSR-XL**	**RNA4900-2RSR-XL**	0,3
16	24	13	8 600	8 300	1 660	13 900	18	**RNA4901-RSR-XL**	**RNA4901-2RSR-XL**	0,3
20	28	13	9 700	10 300	2 070	12 600	21,5	**RNA4902-RSR-XL**	**RNA4902-2RSR-XL**	0,3
22	30	13	10 000	11 000	2 220	12 000	23	**RNA4903-RSR-XL**	**RNA4903-2RSR-XL**	0,3
25	37	17	19 500	19 900	3 800	10 100	56	**RNA4904-RSR-XL**	**RNA4904-2RSR-XL**	0,3
30	42	17	21 800	24 200	4 650	8 600	60	**RNA4905-RSR-XL**	**RNA4905-2RSR-XL**	0,3
35	47	17	23 900	28 500	5 500	7 500	69	**RNA4906-RSR-XL**	**RNA4906-2RSR-XL**	0,3
42	55	20	29 500	39 500	7 400	6 400	107	**RNA4907-RSR-XL**	**RNA4907-2RSR-XL**	0,6
48	62	22	41 000	53 000	9 000	5 500	154	**RNA4908-RSR-XL**	**RNA4908-2RSR-XL**	0,6
52	68	22	43 000	59 000	9 900	5 200	157	**RNA4909-RSR-XL**	**RNA4909-2RSR-XL**	0,6
58	72	22	45 000	64 000	10 800	4 650	160	**RNA4910-RSR-XL**	**RNA4910-2RSR-XL**	0,6

medias *https://www.schaeffler.de/std/1F9A*

Needle roller bearings with ribs

With inner ring
Sealed

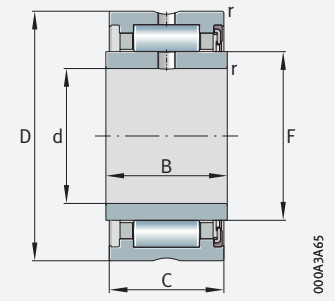

Sealed on one side (-RSR)

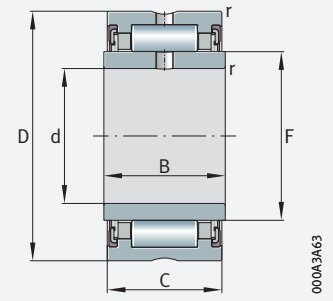

Sealed on both sides (-2RSR)

d = 10 – 50 mm

Main dimensions			Basic load ratings		Fatigue limit load	Limiting speed	Mass	Designation		Dimensions		
d	D	B	dyn. C_r	stat. C_{0r}	C_{ur}	n_G grease	m	➤892|1.12 ➤893|1.13 X-life ➤886		F	C	r
			N	N	N	min^{-1}	≈ g					min.
10	22	14	7 700	6 900	1 390	14 800	24,5	**NA4900-RSR-XL**	**NA4900-2RSR-XL**	14	13	0,3
12	24	14	8 600	8 300	1 660	13 900	27,5	**NA4901-RSR-XL**	**NA4901-2RSR-XL**	16	13	0,3
15	28	14	9 700	10 300	2 070	12 600	37	**NA4902-RSR-XL**	**NA4902-2RSR-XL**	20	13	0,3
17	30	14	10 000	11 000	2 220	12 000	40	**NA4903-RSR-XL**	**NA4903-2RSR-XL**	22	13	0,3
20	37	18	19 500	19 900	3 800	10 100	80	**NA4904-RSR-XL**	**NA4904-2RSR-XL**	25	17	0,3
25	42	18	21 800	24 200	4 650	8 600	89,5	**NA4905-RSR-XL**	**NA4905-2RSR-XL**	30	17	0,3
30	47	18	23 900	28 500	5 500	7 500	104	**NA4906-RSR-XL**	**NA4906-2RSR-XL**	35	17	0,3
35	55	21	29 500	39 500	7 400	6 400	175	**NA4907-RSR-XL**	**NA4907-2RSR-XL**	42	20	0,6
40	62	23	41 000	53 000	9 000	5 500	252	**NA4908-RSR-XL**	**NA4908-2RSR-XL**	48	22	0,6
45	68	23	43 000	59 000	9 900	5 200	290	**NA4909-RSR-XL**	**NA4909-2RSR-XL**	52	22	0,6
50	72	23	45 000	64 000	10 800	4 650	295	**NA4910-RSR-XL**	**NA4910-2RSR-XL**	58	22	0,6

medias *https://www.schaeffler.de/std/1F9A*

Needle roller bearings without ribs

Without inner ring
Open

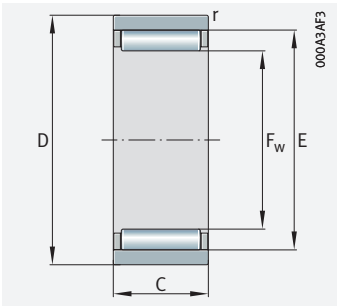

RNAO

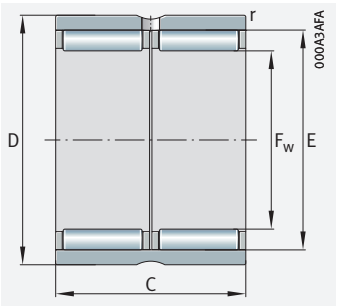

RNAO..-ZW-ASR1

F_w = 5 – 35 mm

Main dimensions			Basic load ratings		Fatigue limit load	Limiting speed	Speed rating	Mass	Designation
F_w	D	C	dyn. C_r	stat. C_{0r}	C_{ur}	n_G	$n_{\vartheta r}$	m	➤*892*|*1.12* ➤*893*|*1.13* X-life ➤*886*
			N	N	N	min^{-1}	min^{-1}	≈ g	
5	10	8	2 650	1 920	300	39 000	53 000	3	**RNAO5×10×8-TV-XL**
6	13	8	2 950	2 280	360	36 500	48 500	6	**RNAO6×13×8-TV-XL**
7	14	8	3 250	2 650	420	34 500	41 500	6	**RNAO7×14×8-TV-XL**
8	15	10	4 450	4 100	700	32 500	35 500	8	**RNAO8×15×10-TV-XL**
10	17	10	5 300	5 500	940	29 500	28 000	10	**RNAO10×17×10-TV-XL**
12	22	12	11 300	9 900	1 770	26 000	19 700	19	**RNAO12×22×12-TV-XL**
15	23	13	9 700	10 900	1 790	24 300	17 900	20	**RNAO15×23×13-XL**
16	24	13	10 100	11 800	1 930	23 600	16 800	21	**RNAO16×24×13-XL**
	28	12	13 000	12 500	2 250	22 900	15 900	32	**RNAO16×28×12-XL**
17	25	13	11 700	14 600	2 280	22 900	15 200	22	**RNAO17×25×13-XL**
18	30	24	24 800	30 000	5 400	21 800	14 000	69	**RNAO18×30×24-ZW-ASR1-XL**
20	28	13	11 100	14 300	2 350	21 300	13 700	25	**RNAO20×28×13-XL**
	28	26	19 000	28 500	4 700	21 300	13 700	50	**RNAO20×28×26-ZW-ASR1-XL**
	32	12	15 100	16 200	2 900	20 900	12 700	38	**RNAO20×32×12-XL**
22	30	13	11 800	15 900	2 600	20 400	12 400	27	**RNAO22×30×13-XL**
	35	16	22 600	25 500	4 250	19 200	11 200	59	**RNAO22×35×16-XL**
25	35	17	16 800	26 000	4 300	18 100	11 000	53	**RNAO25×35×17-XL**
	35	26	21 900	37 000	6 100	18 100	11 200	76	**RNAO25×35×26-ZW-ASR1-XL**
	37	16	23 500	27 500	4 650	17 200	10 000	60	**RNAO25×37×16-XL**
30	40	17	22 100	34 000	5 400	15 100	8 800	60	**RNAO30×40×17-XL**
	42	16	26 000	33 500	5 600	14 600	8 500	59	**RNAO30×42×16-XL**
	42	32	45 000	67 000	11 300	14 600	8 500	137	**RNAO30×42×32-ZW-ASR1-XL**
35	45	13	18 300	28 000	4 550	13 100	7 800	53	**RNAO35×45×13-XL**
	45	17	23 500	38 500	6 200	13 100	7 700	69	**RNAO35×45×17-XL**
	45	26	31 500	56 000	9 100	13 100	7 800	91	**RNAO35×45×26-ZW-ASR1-XL**
	47	16	27 500	37 500	6 300	12 700	7 500	78	**RNAO35×47×16-XL**
	47	18	31 000	43 000	7 500	12 700	7 400	89	**RNAO35×47×18-XL**
	47	32	47 500	75 000	12 600	12 700	7 500	156	**RNAO35×47×32-ZW-ASR1-XL**

medias *https://www.schaeffler.de/std/1F9A*

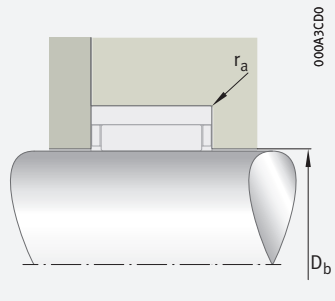

Axial guidance of needle roller and cage assembly in housing

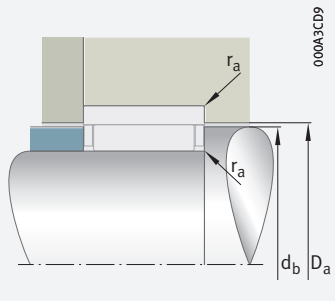

Axial guidance of needle roller and cage assembly on shaft

Dimensions			Mounting dimensions			
F_w	E	r min.	D_b	d_b	D_a	r_a max.
5	8	0,15	5,3	7,7	8,3	0,1
6	9	0,3	6,3	8,7	9,3	0,3
7	10	0,3	7,3	9,7	10,3	0,3
8	11	0,3	8,3	10,7	11,3	0,3
10	13	0,3	10,3	12,7	13,3	0,3
12	18	0,3	12,3	17,6	18,3	0,3
15	19	0,3	15,4	18,6	19,3	0,3
16	20	0,3	16,4	19,6	20,3	0,3
	22	0,3	16,4	21,6	22,3	0,3
17	21	0,3	17,4	20,6	21,3	0,3
18	24	0,3	18,4	23,6	24,5	0,3
20	24	0,3	20,4	23,6	24,3	0,3
	24	0,3	20,4	23,6	24,3	0,3
	26	0,3	20,4	25,6	26,5	0,3
22	26	0,3	22,4	25,6	26,3	0,3
	29	0,3	22,4	28,4	29,5	0,3
25	29	0,3	25,6	28,4	29,5	0,3
	29	0,3	25,6	28,4	29,5	0,3
	32	0,3	25,6	31,4	32,5	0,3
30	35	0,3	30,6	34,4	35,5	0,3
	37	0,3	30,6	36,4	37,5	0,3
	37	0,3	30,6	36,4	37,5	0,3
35	40	0,3	35,6	39,4	40,5	0,3
	40	0,3	35,6	39,4	40,5	0,3
	40	0,3	35,6	39,4	40,5	0,3
	42	0,3	35,6	41,4	42,5	0,3
	42	0,3	35,6	41,4	42,5	0,3
	42	0,3	35,6	41,4	42,5	0,3

Needle roller bearings without ribs

Without inner ring
Open

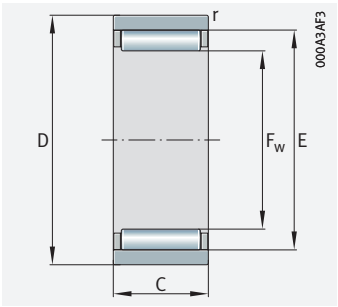

RNAO

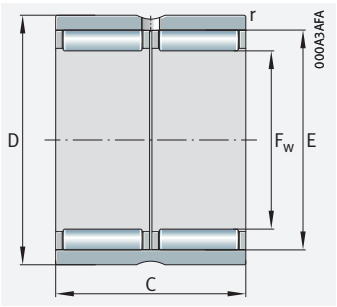

RNAO..-ZW-ASR1

F_w = 40 – 100 mm

Main dimensions			Basic load ratings		Fatigue limit load	Limiting speed	Speed rating	Mass	Designation
F_w	D	C	dyn. C_r	stat. C_{0r}	C_{ur}	n_G	$n_{\vartheta r}$	m	➤*892*|*1.12* ➤*893*|*1.13* X-life➤*886*
			N	N	N	min^{-1}	min^{-1}	≈ g	
40	50	17	24 200	41 500	6 600	11 500	7 000	74	**RNAO40×50×17-XL**
	50	34	41 500	83 000	13 100	11 500	7 000	152	**RNAO40×50×34-ZW-ASR1-XL**
	55	20	37 000	57 000	9 100	11 300	6 600	145	**RNAO40×55×20-XL**
	55	40	70 000	118 000	19 000	11 100	6 500	275	**RNAO40×55×40-ZW-ASR1-XL**
45	55	17	25 500	46 000	7 300	10 300	6 300	83	**RNAO45×55×17-XL**
	62	40	76 000	135 000	21 900	10 000	5 900	377	**RNAO45×62×40-ZW-ASR1-XL**
50	62	20	30 000	60 000	9 700	9 300	5 800	140	**RNAO50×62×20-XL**
	65	20	40 500	62 000	11 000	9 100	5 600	168	**RNAO50×65×20-XL**
	65	40	69 000	124 000	22 100	9 100	5 600	355	**RNAO50×65×40-ZW-ASR1-XL**
55	68	20	32 000	66 000	10 900	8 500	5 400	166	**RNAO55×68×20-XL**
60	78	20	49 500	85 000	13 900	7 700	4 650	255	**RNAO60×78×20-XL**
	78	40	85 000	171 000	28 000	7 700	4 650	435	**RNAO60×78×40-ZW-ASR1-XL**
65	85	30	64 000	123 000	21 500	7 100	4 550	464	**RNAO65×85×30-XL**
70	90	30	68 000	135 000	23 600	6 600	4 250	499	**RNAO70×90×30-XL**
80	100	30	80 000	176 000	31 500	5 800	3 600	580	**RNAO80×100×30-XL**
90	105	26	69 000	150 000	25 500	5 200	3 350	373	**RNAO90×105×26-XL**
	110	30	76 000	172 000	30 000	5 200	3 450	610	**RNAO90×110×30-XL**
100	120	30	80 000	188 000	32 500	4 700	3 150	694	**RNAO100×120×30-XL**

medias *https://www.schaeffler.de/std/1F9A*

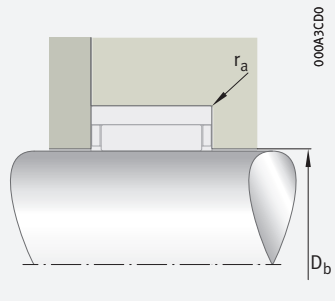

Axial guidance of needle roller and cage assembly in housing

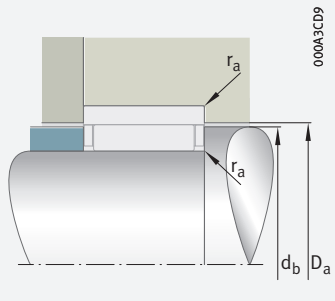

Axial guidance of needle roller and cage assembly on shaft

Dimensions			Mounting dimensions			
F_w	E	r min.	D_b	d_b	D_a	r_a max.
40	45	0,3	40,6	44,4	45,5	0,3
	45	0,3	40,6	44,4	45,5	0,3
	47	0,3	40,6	46,2	47,5	0,3
	48	0,3	40,6	47,2	47,5	0,3
45	50	0,3	45,6	49,2	50,5	0,3
	53	0,3	45,6	52,2	53,5	0,3
50	55	0,3	50,6	54,2	55,8	0,3
	58	0,3	50,6	57,2	58,5	0,3
	58	0,6	50,6	57,2	58,5	0,6
55	60	0,6	55,8	59,4	60,8	0,6
60	68	1	60,8	67,2	68,8	1
	68	1	60,8	67,2	68,8	1
65	73	1	66	72,2	73,8	1
70	78	1	71	77,2	78,8	1
80	88	1	81	87,2	89	1
90	98	1	91	97,2	99	1
	98	1	91	97,2	99	1
100	108	1	101	107,2	109	1

Needle roller bearings without ribs

With inner ring
Open

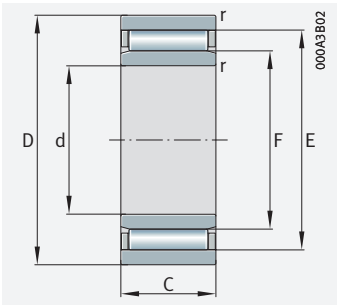

NAO, NAO..-IS1
(with lubrication hole in inner ring)

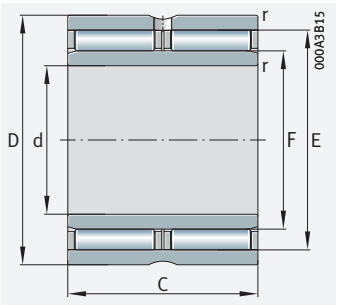

NAO..-ZW-ASR1

d = 6 – 90 mm

Main dimensions			Basic load ratings		Fatigue limit load	Limiting speed	Speed rating	Mass	Designation
d	D	B	dyn. C_r	stat. C_{0r}	C_{ur}	n_G	$n_{\vartheta r}$	m	➤*892* | *1.12* ➤*893* | *1.13* X-life ➤*886*
			N	N	N	min^{-1}	min^{-1}	≈ g	
6	17	10	5 300	5 500	940	29 500	23 800	14	**NAO6×17×10-TV-IS1-XL**
9	22	12	11 300	9 900	1 770	26 000	17 900	23,5	**NAO9×22×12-TV-XL**
12	24	13	10 100	11 800	1 930	23 600	15 000	30	**NAO12×24×13-XL**
	28	12	13 000	12 500	2 250	22 900	14 300	40	**NAO12×28×12-IS1-XL**
15	28	13	11 100	14 300	2 350	21 300	12 100	29	**NAO15×28×13-XL**
	32	12	15 100	16 200	2 900	20 900	11 400	50	**NAO15×32×12-IS1-XL**
17	30	13	11 800	15 900	2 600	20 400	11 100	42	**NAO17×30×13-XL**
	35	16	22 600	25 500	4 250	19 200	10 100	78	**NAO17×35×16-XL**
20	35	17	16 800	26 000	4 300	18 100	10 000	76	**NAO20×35×17-XL**
	37	16	23 500	27 500	4 650	17 200	9 100	82	**NAO20×37×16-XL**
25	40	17	22 100	34 000	5 400	15 100	8 100	88	**NAO25×40×17-XL**
	42	16	26 000	33 500	5 600	14 600	7 800	86	**NAO25×42×16-IS1-XL**
	42	32	45 000	67 000	11 300	14 600	7 800	190	**NAO25×42×32-ZW-ASR1-XL**
30	45	17	23 500	38 500	6 200	13 100	7 100	102	**NAO30×45×17-XL**
	45	26	31 500	56 000	9 100	13 100	7 200	157	**NAO30×45×26-ZW-ASR1-XL**
	47	16	27 500	37 500	6 300	12 700	6 900	109	**NAO30×47×16-XL**
	47	18	31 000	43 000	7 500	12 700	6 900	119	**NAO30×47×18-XL**
35	50	17	24 200	41 500	6 600	11 500	6 500	113	**NAO35×50×17-XL**
	55	20	37 000	57 000	9 100	11 300	6 200	190	**NAO35×55×20-XL**
40	55	17	25 500	46 000	7 300	10 300	5 900	127	**NAO40×55×17-XL**
50	68	20	32 000	66 000	10 900	8 500	5 100	230	**NAO50×68×20-IS1-XL**
70	100	30	80 000	176 000	31 500	5 800	3 350	850	**NAO70×100×30-XL**
80	110	30	76 000	172 000	30 000	5 200	3 200	920	**NAO80×110×30-XL**
90	120	30	80 000	188 000	32 500	4 700	2 950	1 044	**NAO90×120×30-XL**

medias *https://www.schaeffler.de/std/1F9A*

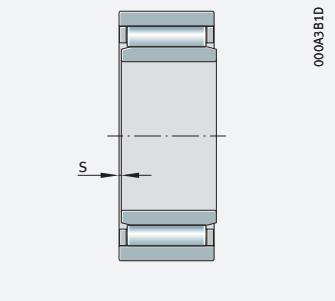

Axial displacement “s”

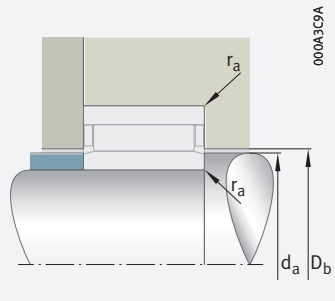

Axial guidance of needle roller and cage assembly in housing

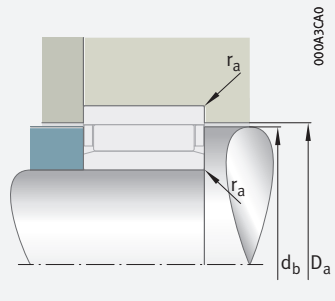

Axial guidance of needle roller and cage assembly on shaft

Dimensions					Mounting dimensions				
d	F	E	r min.	s	d_a	D_b	d_b	D_a	r_a max.
6	10	13	0,3	0,5	9,7	10,3	12,7	13,3	0,3
9	12	18	0,3	0,5	11,7	12,3	17,6	18,3	0,3
12	16	20	0,3	0,5	15,7	16,4	19,6	20,3	0,3
	16	22	0,3	0,5	15,7	16,4	21,6	22,3	0,3
15	20	24	0,3	0,5	19,7	20,4	23,6	24,3	0,3
	20	26	0,3	0,5	19,7	20,4	25,6	26,5	0,3
17	22	26	0,3	0,5	21,5	22,4	25,6	26,3	0,3
	22	29	0,3	0,5	21,5	22,4	28,4	29,5	0,3
20	25	29	0,3	0,5	24,5	25,6	28,4	29,5	0,3
	25	32	0,3	0,5	24,5	25,6	31,4	32,5	0,3
25	30	35	0,3	0,8	29,5	30,6	34,4	35,5	0,3
	30	37	0,3	0,8	29,5	30,6	36,4	37,5	0,3
	30	37	0,3	0,8	29,5	30,6	36,4	37,5	0,3
30	35	40	0,3	0,8	34,5	35,6	39,4	40,5	0,3
	35	40	0,3	0,8	34,5	35,6	39,4	40,5	0,3
	35	42	0,3	0,8	34,5	35,6	41,4	42,5	0,3
	35	42	0,3	0,8	34,5	35,6	41,4	42,5	0,3
35	40	45	0,3	0,8	39,5	40,6	44,4	45,5	0,3
	40	47	0,3	0,8	39,5	40,6	46,2	47,5	0,3
40	45	50	0,3	0,8	44,5	45,6	49,2	50,5	0,3
50	55	60	0,6	1	54,5	55,8	59,2	60,8	0,6
70	80	88	1	1	79,3	81	87,2	89	1
80	90	98	1	1	89,3	91	97,2	99	1
90	100	108	1	1	99,3	101	107,2	109	1

Aligning needle roller bearings

Without inner ring

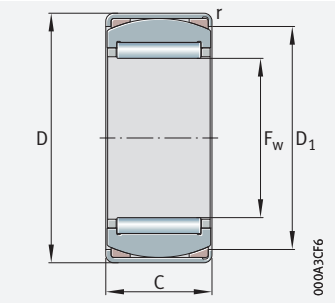

RPNA

F_w = 15 – 45 mm

Main dimensions			Basic load ratings		Fatigue limit load	Limiting speed	Mass	Designation	Dimensions	
F_w	D	C	dyn. C_r	stat. C_{0r}	C_{ur}	n_G	m	➤*892*|*1.12* ➤*893*|*1.13* X-life ➤*886*	D_1	r
		±0,5	N	N	N	min^{-1}	≈ g			min.
15	28	12	7 800	7 900	1 450	24 100	32	**RPNA15/28-XL**	24,5	0,8
18	32	16	14 100	16 200	3 050	22 100	52	**RPNA18/32-XL**	27	0,8
20	35	16	14 600	17 500	3 300	21 100	62	**RPNA20/35-XL**	30,5	0,8
25	42	20	21 300	30 500	5 400	17 800	109	**RPNA25/42-XL**	36,5	0,8
28	44	20	24 800	34 000	6 000	15 800	112	**RPNA28/44-XL**	38,5	0,8
30	47	20	25 500	36 000	6 400	14 800	125	**RPNA30/47-XL**	42	0,8
35	52	20	27 500	41 500	7 400	12 900	131	**RPNA35/52-XL**	47,5	0,8
40	55	20	29 500	47 000	8 400	11 400	141	**RPNA40/55-XL**	50,5	0,8
45	62	20	31 000	53 000	9 400	10 200	176	**RPNA45/62-XL**	58	0,8

medias *https://www.schaeffler.de/std/1F9A*

Aligning needle roller bearings

With inner ring

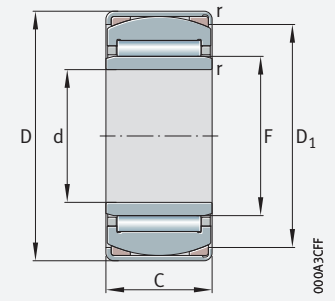

PNA

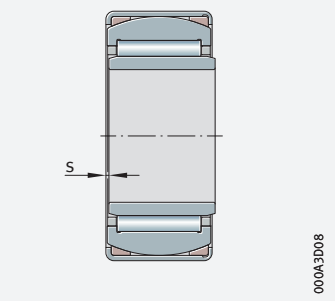

Axial displacement “s”

d = 12 – 40 mm

Main dimensions			Basic load ratings		Fatigue limit load	Limiting speed	Mass	Designation	Dimensions					
d	D	C	dyn. C_r	stat. C_{0r}	C_{ur}	n_G	m	➤892|1.12 ➤893|1.13 X-life ➤886	F	B	D_1	r	r_1	s
		±0,5	N	N	N	min^{-1}	≈ g					min.	min.	min.
12	28	12	7 800	7 900	1 450	24 100	37	**PNA12/28-XL**	15	12	24,5	0,8	0,3	0,5
15	32	16	14 100	16 200	3 050	22 100	62	**PNA15/32-XL**	18	16	27	0,8	0,3	0,5
17	35	16	14 600	17 500	3 300	21 100	73	**PNA17/35-XL**	20	16	30,5	0,8	0,3	0,5
20	42	20	21 300	30 500	5 400	17 800	136	**PNA20/42-XL**	25	20	36,5	0,8	0,3	0,5
22	44	20	24 800	34 000	6 000	15 800	145	**PNA22/44-XL**	28	20	38,5	0,8	0,3	0,5
25	47	20	25 500	36 000	6 400	14 800	157	**PNA25/47-XL**	30	20	42	0,8	0,3	0,5
30	52	20	27 500	41 500	7 400	12 900	181	**PNA30/52-XL**	35	20	47,5	0,8	0,3	0,5
35	55	20	29 500	47 000	8 400	11 400	177	**PNA35/55-XL**	40	20	50,5	0,8	0,3	0,5
40	62	20	31 000	53 000	9 400	10 200	227	**PNA40/62-XL**	45	20	58	0,8	0,3	0,5

medias *https://www.schaeffler.de/std/1F9A*

2 Combined needle roller bearings

The bearings:

- can support high radial loads and moderate axial loads by means of a single bearing position ➤*930*|*1*
- are suitable for applications with a very small radial design envelope, where the raceway on the shaft is designed as a rolling bearing raceway (direct bearing arrangement)
- permit relatively high speeds, if the rolling element set in the axial bearing component is not full complement but guided by a cage
- have a high running accuracy
- permit locating bearing arrangements with only a very small radial design envelope
- result in axially rigid bearing arrangements
- are easy to mount as they are not self-retaining in many cases
- permit technically straightforward, economical and cost-effective designs

For an overview of other product-specific features, see the Matrix for bearing preselection ➤*878*.

1
Combined needle roller bearing / needle roller bearing: comparison of load direction

F_r = *radial load*
F_a = *axial load*

① *Needle roller/axial deep groove ball bearing NKX*
② *Needle roller bearing NK*

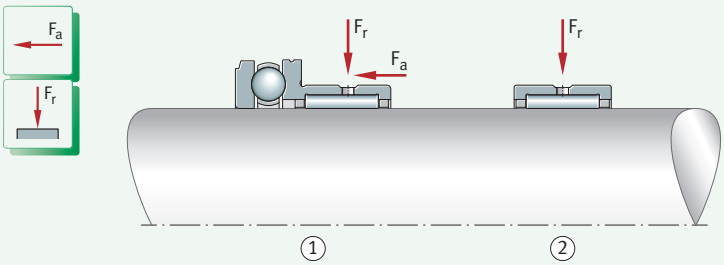

2.1 Bearing design

✎ *Design variants*

The standard product range of combined needle roller bearings comprises:

- needle roller/axial deep groove ball bearings ➤*931*|*3* to ➤*932*|*5*
- needle roller/axial cylindrical roller bearings ➤*933*|*6* and ➤*933*|*7*
- needle roller/angular contact ball bearings ➤*933*|*8* and ➤*934*|*9*

The majority of these needle roller bearings are X-life bearings ➤*934*.

Combined needle roller bearings

The bearings comprise a radial component and an axial component

Combined needle roller bearings comprise a radial needle roller bearing, which is combined with an axial bearing component ➤*931*|*3*, ➤*932*|*5* and ➤*933*|*6*. These bearings can support radial as well as axial loads with just one bearing and permit locating bearing arrangements with only a small radial design envelope ➤*931*|*2* and ➤*934*|*2.2*. They are suitable, for example, where radial and axial loads are present and simple axial contact washers are no longer able to support the axial loads on account of their size, high speeds or inadequate lubrication, and other locating bearings require too much installation space.

2

Combined needle roller bearings, radial and axial dynamic load carrying capacity

C_r = *radial basic dynamic load rating*

C_a = *basic axial dynamic load rating*

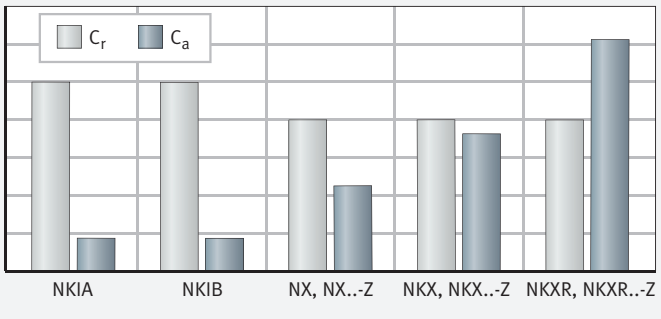

Needle roller/axial deep groove ball bearings

Suitable for compact direct bearing arrangements on the shaft

Needle roller/axial deep groove ball bearings do not have an inner ring and are therefore particularly compact in a radial direction ➤*931*|*3*. However, they require a shaft raceway that is hardened and ground ➤*943*|*2.16*. If the shaft cannot be used as a rolling bearing raceway, inner rings IR can be used instead ➤*932*|*4*. The suitable inner rings are given in the product tables and must be ordered in addition to the bearing ➤*950*|. For lubrication, the outer ring of the radial bearing component has a lubrication groove and lubrication holes.

Type NX, NX..-Z

The rolling element set for the axial bearing component is a full complement ball system

Needle roller/axial deep groove ball bearings NX and NX..-Z have a full complement ball rolling element set and an extremely low radial section height ➤*931*|*3*. Due to the compact radial dimensions, bearing arrangements can be achieved with very small shaft centre distances, such as those that may be present in multi-spindle drilling machines. A sheet steel end cap secured to the radial bearing component grips the shaft locating washing of the axial bearing and holds the axial bearing component together ➤*931*|*3*. As a result, the bearings are self-retaining. The sheet metal caps for bearings NX have lubrication holes for oil lubrication ➤*931*|*3* and ➤*937*|*2.4*.

3

Needle roller/axial deep groove ball bearing NX without inner ring

F_r = *radial load*

F_a = *axial load*

① *NX, full complement axial ball bearing component, with end cap, lubrication holes in the cap*

② *NX..-Z, full complement axial ball bearing component, with end cap, no lubrication holes in the cap*

③ *End cap*

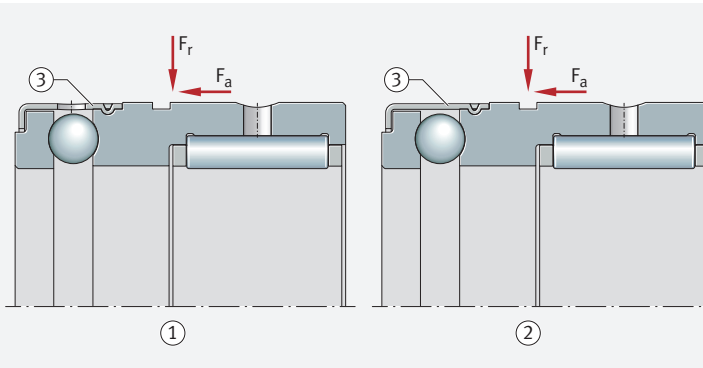

4
Needle roller/axial deep groove ball bearing NX..-Z with inner ring

① *Inner ring IR*

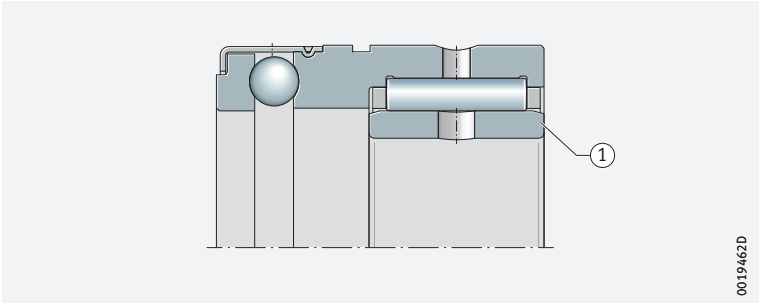

Type NKX, NKX..-Z

✎ The rolling element set for the axial bearing component is guided by a cage

In bearings NKX and NKX..-Z, the rolling element set is not a full complement ball system, as is present in bearings NX, but is retained by a cage ➤*932*| *5*. The ball and cage assembly corresponds to an axial deep groove ball bearing of series 511. As a result of the cage, these bearings are suitable for higher speeds than bearings of the full complement design ➤*950*|.

✎ Type NKX

Bearings NKX are not self-retaining, i. e radial needle roller bearing, axial ball and cage assembly and shaft locating washer can be fitted independently of each other ➤*932*| *5*.

✎ Type NKX..-Z

Type NKX..-Z has a sheet steel end cap, which holds the axial bearing component together, i. e. the bearings are self-retaining.
The cap is designed without lubrication holes and is rigidly connected to the housing locating washer of the radial bearing component ➤*932*| *5*.

5
Needle roller/axial deep groove ball bearings without inner ring

F_r = *radial load*
F_a = *axial load*

① *NKX, axial bearing component with ball and cage assembly, without end cap*
② *NKX..-Z, axial bearing component with ball and cage assembly, with end cap, no lubrication holes in the cap*
③ *End cap*

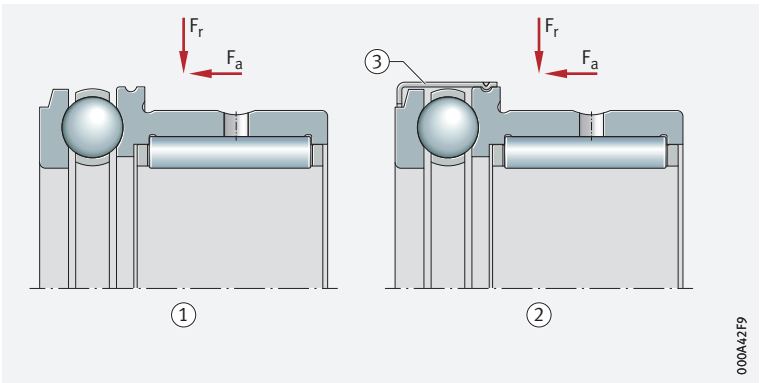

Needle roller/axial cylindrical roller bearings

Type NKXR, NKXR..-Z

✎ The rolling element set for the axial bearing component is guided by a cage

These bearings comprise a radial needle roller bearing and an axial cylindrical roller bearing of series 811 with a plastic cage. They do not have
an inner ring and require a shaft raceway that is hardened and ground ➤*933*| *6* and ➤*943*| *2.16*. If the shaft cannot be used as a rolling bearing raceway, inner rings IR can be used instead ➤*933*| *7*. The suitable inner rings are given in the product tables and must be ordered in addition to the bearing ➤*954*|. For lubrication, the outer ring of the radial bearing component has a lubrication groove and lubrication holes.

✎ Type NKXR

Type NKXR is not self-retaining, i. e. the radial needle roller bearing, axial cylindrical roller bearing and shaft locating washer can be fitted independently of each other ➤*933*| *6*.

✎ Type NKXR..-Z

A sheet steel end cap secured to the radial bearing component grips the shaft locating washing of the axial cylindrical roller bearing and holds the axial bearing component together. As a result, these bearings are self-retaining ➤*933*| *6*.

6
Needle roller/axial cylindrical roller bearings without inner ring

F_r = *radial load*
F_a = *axial load*

① *NKXR, axial bearing component with roller and cage assembly, without end cap*
② *NKXR..-Z, axial bearing component with roller and cage assembly, with end cap, no lubrication holes in the cap*
③ *End cap*

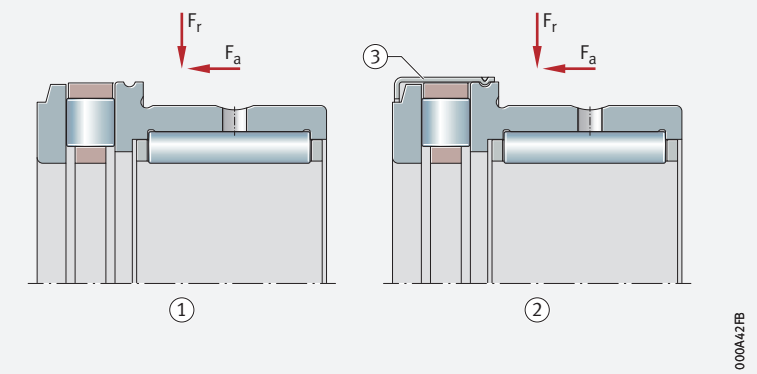

7
Needle roller/axial cylindrical roller bearing NKXR with inner ring

① *Inner ring IR*

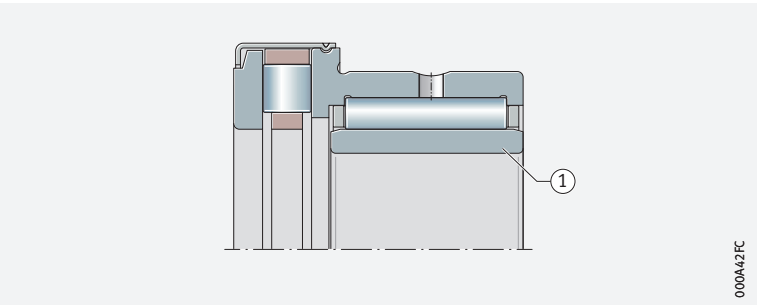

Needle roller/angular contact ball bearings

Type NKIA, NKIB

The rolling element set for the axial bearing component is guided by a cage

Needle roller/angular contact ball bearings comprise a radial needle roller bearing, an angular contact ball bearing as the axial component and an inner ring ➤*933*| *8* and ➤*934*| *9*. In the case of type NKIA the inner ring is of a single-piece design, whereas design NKIB has one narrow and one wide inner ring. The ball cage of the axial bearing component is made from plastic ➤*933*| *8* and ➤*934*| *9* and ➤*939*| *2.9*. The bearings have a low radial section height and are suitable for high speeds ➤*956*|. As needle roller/angular contact ball bearings are not self-retaining, the inner ring can be mounted independently of the outer ring and needle roller and ball set. During fitting it must, however, be ensured that the bearing rings are not interchanged with rings from other bearings, but are always mounted in the delivered matched pair.

8
Needle roller/angular contact ball bearing NKIA

F_r = *radial load*
F_a = *axial load*

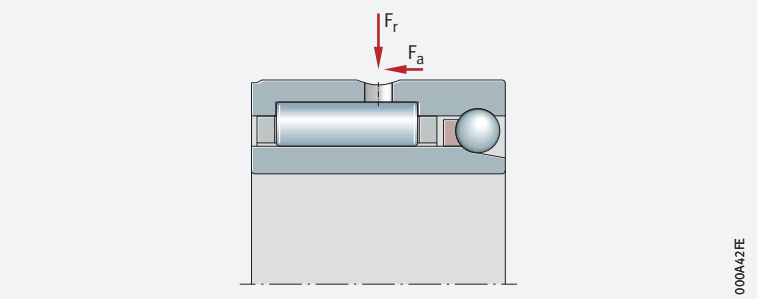

9
Needle roller/angular contact ball bearing NKIB

F_r = *radial load*
F_a = *axial load*

① *Wide inner ring*
② *Narrow inner ring*

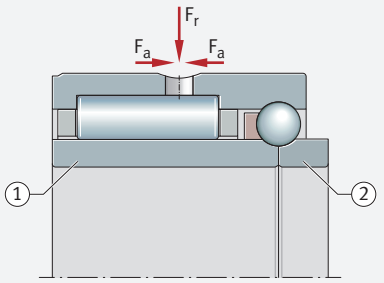

X-life premium quality

The combined needle roller bearings described here are X-life bearings. They are characterised by a very high load carrying capacity and long rating life. This is achieved, for example, through the modified internal construction and optimised contact geometry between the rolling elements
and raceways, as well as through the higher quality of the steel and rolling elements, higher surface quality and appropriate heat treatment.

Increased customer benefits due to X-life

Advantages

The technical enhancements offer a range of advantages, such as:

- a more favourable load distribution in the bearing and thus a higher dynamic load carrying capacity of the bearings
- quieter running
- running with reduced friction and greater energy efficiency
- lower heat generation in the bearing
- higher possible speeds
- lower lubricant consumption and, consequently, longer maintenance intervals
- a measurably longer operating life of the bearings
- high operational security
- compact, environmentally-friendly bearing arrangements

Lower operating costs, higher machine availability

In conclusion, these advantages improve the overall cost-efficiency of the bearing position significantly and thus bring about a sustainable increase in the efficiency of the machine and equipment.

Suffix XL

Combined needle roller bearings in X-life quality include the suffix XL in the designation ➤*938*| *13* to ➤*941*| *15* and ➤*950*|.

X-life indicates a high product performance density and thus a particularly significant benefit to the customer. Further information on X-life ➤*10*.

2.2 Load carrying capacity

Needle roller/axial deep groove ball bearings NX, NX..-Z, NKX, NKX..-Z

Suitable for moderate axial loads

Needle roller/axial deep groove ball bearings support high radial loads and moderate axial loads in one direction ➤*931*| *3* to ➤*932*| *5*. Bearings with a full complement ball set have a higher axial load carrying capacity than bearings with a cage-guided axial component ➤*931*| *2*.

Bearing arrangement for supporting axial loads in both directions

Mounting of two needle roller/axial deep groove ball bearings in a mirror image arrangement

Needle roller/axial deep groove ball bearings can support axial loads in one direction only. If no temperature-induced changes in length occur during operation in an arrangement of short shafts, two bearings can also be used to support axial loads in both directions, which are then mounted in a mirror image arrangement ➤*935*|*10*. The bearing parts should, however, be elastically preloaded in an axial direction, for example by means of disc springs ➤*935*|*10*. The elastic preload ensures that the unloaded axial bearing component runs without slippage ➤*943*|*2.15*. The preload also improves the operating behaviour of axial ball bearings and reduces running noise.

10

Two needle roller/axial deep groove ball bearings NKX mounted in a mirror image arrangement and axially preloaded with disc springs

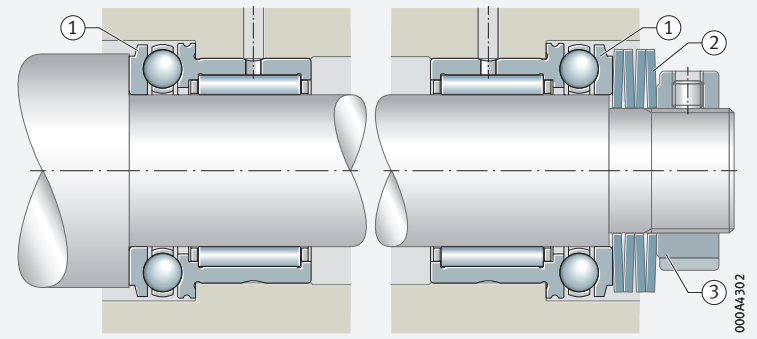

① *Needle roller/axial deep groove ball bearing NKX*
② *Disc spring set*
③ *Shaft nut for preloading*

Needle roller/axial cylindrical roller bearings NKXR, NKXR..-Z

Suitable for high axial loads

Needle roller/axial cylindrical roller bearings support high radial loads and also, due to the line contact of the cylindrical rollers, high axial loads in one direction ➤*931*|*2*, ➤*933*|*8* and ➤*934*|*9*.

Bearing arrangement for supporting axial loads in both directions

Mounting of two needle roller/axial cylindrical roller bearings in a mirror image arrangement

Needle roller/axial cylindrical roller bearings can support axial loads in one direction only. If no temperature-induced changes in length occur during operation in an arrangement of short shafts, two bearings can also be used to support axial loads in both directions, which are then mounted in a mirror image arrangement. The bearing parts should, however, be elastically preloaded in an axial direction, for example by means of disc springs ➤*935*|*10*. The elastic preload ensures that the unloaded axial bearing component runs without slippage. The preload also improves the operating behaviour of needle roller/axial cylindrical roller bearings and reduces running noise.

Needle roller/angular contact ball bearings NKIA, NKIB

NKIA for axial forces in one direction, NKIB for alternating axial forces

The radial bearing supports high radial loads, the angular contact ball bearing supports smaller axial forces. NKIA can support axial loads from one direction only ➤*933*|*8*. NKIB has one narrow and one wide inner ring ➤*934*|*9*. At the point where the inner rings join, there is a shoulder on both sides for guidance of the ball and cage assembly. As a result, these bearings are also suitable for supporting axial forces alternating in direction, i. e. as locating bearings, they can guide the shaft axially in both directions. The shaft is guided axially with an axial clearance of 0,08 mm to 0,25 mm.

Replacement of inner rings

In standard bearings of series NKIA and NKIB, the inner rings are matched to the enveloping circle tolerance F6 and can be interchanged with each other (mixed use) within the same accuracy class.

When mounting bearings NKIB, both inner ring parts must be located axially clearance-free against each other. The narrow inner ring has a larger bore diameter. This results in an interference fit if a shaft tolerance k6 is used.

Bearing arrangement for supporting axial loads in both directions with bearings NKIA

Mounting of two needle roller/angular contact ball bearings in a mirror image arrangement

Needle roller/angular contact ball bearings NKIA support axial loads in one direction. In order to support axial loads in both directions, two bearings NKIA can also be used, which are then mounted in a mirror image arrangement ➤936|11.

11
Two needle roller/angular contact ball bearings NKIA mounted in a mirror image arrangement

① *Needle roller/angular contact ball bearing NKIA*
② *Shaft nut for preloading*

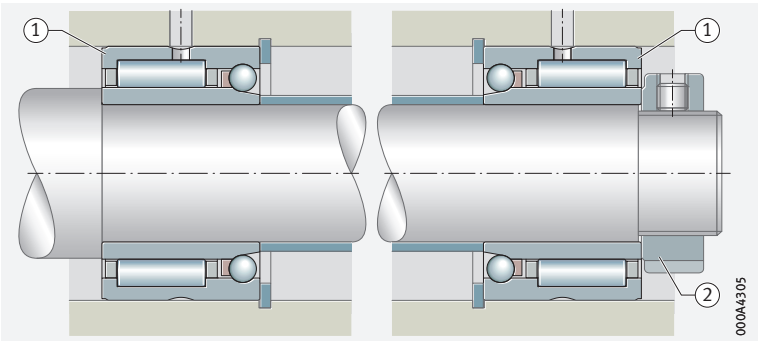

Support of axial forces

Preloading of the axial bearing component

The axial bearing component must be preloaded to 1% of the axial basic static load rating C_{0a} (for example using disc springs). The basic load ratings C_{0a} are stated in the product tables.

Needle roller/axial deep groove ball bearings and needle roller/axial cylindrical roller bearings

Shortening of the retaining rings where there is little distance between the shafts

In order to support axial forces, the bearings must be abutted by means of snap rings on the outer ring or a housing shoulder. If there is little distance between the shaft centres, the snap rings should be shortened ➤936|12. Snap rings WR and SW are available from trade outlets. If the bearings are to support axial forces from alternating directions, two bearings must be fitted opposed to each other. The unloaded bearing must then be axially preloaded, for example by means of disc springs ➤935|10. This allows compensation of thermal expansion.

12
Bearing arrangement with shortened snap rings

① *Snap ring*
② *Shortened area*

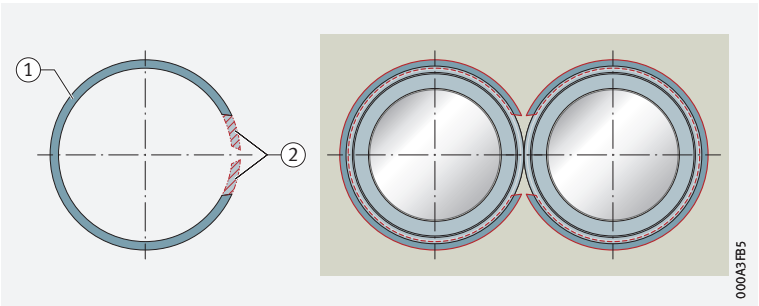

Shaft raceway designed in accordance with DIN 617

If the surface of the shaft raceway is produced to DIN 617, the basic load ratings C_r in the product tables must be reduced by 15%.

2.3 Compensation of angular misalignments

The bearings are not suitable for the compensation of shaft misalignments relative to the housing

Combined needle roller bearings are not suitable for the compensation of angular misalignments. The extent to which a misalignment of the shaft can be tolerated relative to the housing bore is dependent on factors such as the design of the bearing arrangement, the size of the bearing, the operating clearance and the load etc. As a result, no guide value can be specified here for a possible misalignment. If angular misalignments occur, aligning needle roller bearings can, for example, be used in combination with an axial bearing, depending on the application.

In all cases, misalignments cause increased running noise, place increased strain on the cages and have a harmful influence on the operating life of the bearings.

2.4 Lubrication

Greasing of the radial bearing component prior to initial operation

In bearings with grease lubrication, the radial bearing component should be greased before initial operation using a grease of similar quality to that used in the axial bearing component.

Determining the relubrication interval

In order to determine the relubrication interval, values must be calculated separately for the axial and radial bearing components and the lower values should be used.

Compatibility with plastic cages

When using bearings with plastic cages, compatibility between the lubricant and the cage material must be ensured if synthetic oils, lubricating greases with a synthetic oil base or lubricants containing a high proportion of EP additives are used.

Needle roller/axial deep groove ball bearings

Type NX, NKX

NX, NKX for oil lubrication, NX..-Z, NKX..-Z for grease lubrication

NX and NKX are intended for oil lubrication, therefore the bearings are not greased. Oil lubrication is carried out via the lubrication holes in the end cap ➤*932*|⧉ *5*. If grease lubrication is intended, bearings of type NX..-Z or NXK..-Z should be used. In the case of these bearings, the axial bearing component is greased using a lithium complex soap grease to GA08. The end caps do not have lubrication holes.

Type NKX, NKX..-Z

Type NKX

Type NKX does not have a cap which holds the axial bearing component together ➤*932*|⧉ *5*. As a result, these bearings are not self-retaining. They should be used with oil lubrication in preference, as the lubricating grease can only be retained with difficulty in the axial bearing component.

Type NKX..-Z

The bearings have an end cap without lubrication holes and are intended for grease lubrication ➤*930*|*2.1* and ➤*932*|⧉ *5*. The axial bearing component is greased using a lithium complex soap grease to GA08.

Needle roller/axial cylindrical roller bearings

Type NKXR, NKXR..-Z

Type NKXR

As the bearings do not have an end cap, the lubricating grease can only be retained with difficulty in the axial bearing component ➤*933*|⧉ *6*. They should therefore be lubricated using oil in preference.

Type NKXR..-Z

Bearings of this type have an end cap without lubrication holes and are intended for grease lubrication ➤*933*|⧉ *6*. The axial bearing component is greased using a lithium complex soap grease to GA08.

Needle roller/angular contact ball bearings

Type NKIA, NKIB

Needle roller/angular contact ball bearings can be lubricated with oil or grease. For lubrication, the outer ring has a lubrication groove and a lubrication hole ➤*933*|⧉ *8* and ➤*934*|⧉ *9*. If grease lubrication is used, the radial and axial bearing components must be lubricated with the same grease prior to mounting the bearings.

2.5 Sealing

Provide seals in the adjacent construction

Combined needle roller bearings are not sealed. In the case of unsealed bearings, sealing of the bearing position must be carried out in the adjacent construction. This must reliably prevent:

- moisture and contaminants from entering the bearing
- the egress of lubricant from the bearing

13
Sealing of the bearing position in the adjacent construction – example

① *Needle roller/axial deep groove ball bearing NX..-Z*
② *Sealing of the bearing with rotary shaft seal G*

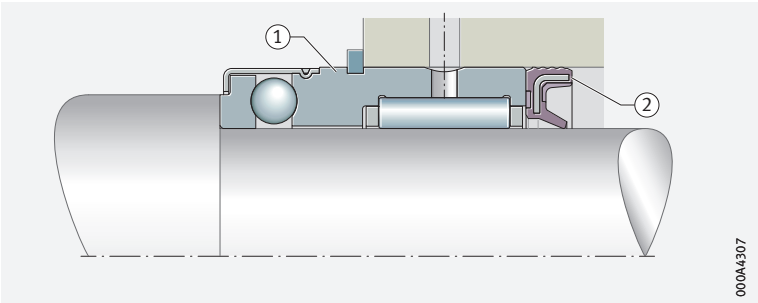

Bearings with end cap

End caps without lubrication holes are suitable for grease lubrication

Bearings of design Z have an end cap, which grips the axial bearing component ➤*930*|*2.1* and ➤*931*|*3*, ➤*932*|*5* and ➤*933*|*6*. End caps without lubrication holes form a gap seal and retain the lubricating grease in the axial bearing component (applies to types NX..-Z, NKX..-Z, NKXR..-Z).

2.6 Speeds

Speeds in the product tables

The product tables generally give two speeds for the bearings:

- the kinematic limiting speed n_G
- the thermal speed rating $n_{\vartheta r}$

Limiting speeds

The limiting speed n_G is the kinematically permissible speed of the bearing. Even under favourable mounting and operating conditions, this value should not be exceeded without prior consultation with Schaeffler ➤*64*.

The values in the product tables are valid for oil lubrication.

Values for grease lubrication

For grease lubrication, 60% of the value stated in the product tables is permissible in each case.

Reference speeds

$n_{\vartheta r}$ is used to calculate n_{ϑ}

The thermal speed rating $n_{\vartheta r}$ is not an application-oriented speed limit, but is a calculated ancillary value for determining the thermally safe operating speed n_{ϑ} ➤*64*.

The thermally safe speed rating $n_{\vartheta r}$ for NKXR, NKXR..-Z, NKIA and NKIB is given in the product tables. The speed rating $n_{\vartheta r}$ to DIN ISO 15312:2004 is not defined for bearings NX and NKX and therefore only the limiting speed n_G is given.

In order to calculate the thermally safe operating speed n_{ϑ}, NKXR(..-Z) must be regarded as axial bearings and NKIA, NKIB as radial bearings.

2.7 Noise

Schaeffler Noise Index

The Schaeffler Noise Index (SGI) is not yet available for this bearing type ➤69. The data for these bearing series will be introduced and updated in stages.

Further information:

- ***medias*** *https://medias.schaeffler.com*

2.8 Temperature range

Limiting values

The operating temperature of the bearings is limited by:

- the dimensional stability of the bearing rings and rolling elements
- the cage
- the lubricant

Possible operating temperatures of combined needler roller bearings ➤426|▦3.

▦ **1**
Permissible temperature ranges

Operating temperature	Combined needle roller bearings Full complement ball type bearings, bearings with a sheet steel cage or polyamide cage PA66
	–30 °C to +120 °C

In the event of anticipated temperatures which lie outside the stated values, please contact Schaeffler.

2.9 Cages

Sheet steel or plastic cages are used as standard

The cages of radial bearings are made from sheet steel or plastic and are closed on both sides ➤950|▦. Bearings with a polyamide cage PA66 have the suffix TV. The cages for the axial bearing component are closed on both sides or open on one side. Sheet steel or glass fibre reinforced polyamide PA66 are used here as standard, depending on the bearing type.

For high continuous temperatures and applications with difficult operating conditions, bearings with sheet steel cages should be used. If there is any uncertainty regarding cage suitability, please consult Schaeffler.

2.10 Internal clearance

Radial internal clearance of bearings with inner ring

The standard is CN

As standard, combined needler roller bearings with inner ring have the radial internal clearance CN (normal) ➤940|▦2. CN is not stated in the designation.

The values for radial internal clearance in bearings with an inner ring correspond to DIN 620-4:2004 (ISO 5753-1:2009) ➤940|▦2. These are valid for bearings which are free from load and measurement forces (without elastic deformation).

For delivery options of bearings with a radial internal clearance value other than CN (for example C2, C3, C4) please consult Schaeffler.

Bearings with inner ring

2 *Radial internal clearance of combined needle roller bearings with inner ring*

Nominal bore diameter d mm		Radial internal clearance CN µm	
over	incl.	min.	max.
–	24	20	45
24	30	20	45
30	40	25	50
40	50	30	60
50	65	40	70
65	80	40	75
80	100	50	85

Enveloping circle diameter F_w for bearings without an inner ring

For bearings without an inner ring, the enveloping circle diameter F_w is used

In the case of bearings without inner ring, the dimension for the enveloping circle diameter F_w is used instead of the radial internal clearance. The enveloping circle is the inner inscribed circle of the needle rollers in clearance-free contact with the outer raceway. For bearings before fitting, the enveloping circle F_w is in the tolerance class F6.

Deviations ➤940|3.

3 *Deviations for the enveloping circle diameter*

Enveloping circle diameter F_w mm		Tolerance class F6 Tolerance for enveloping circle diameter F_w	
		upper deviation	lower deviation
over	incl.	µm	µm
3	6	+18	+10
6	10	+22	+13
10	18	+27	+16
18	30	+33	+20
30	50	+41	+25
50	80	+49	+30
80	120	+58	+36
120	180	+68	+43
180	250	+79	+50
250	315	+88	+56
315	400	+98	+62
400	500	+108	+68

2.11 Dimensions, tolerances

Dimension standards

The main dimensions of combined needle roller bearings correspond to ISO 15:2017 (DIN 616:2000 and DIN 5429-1:2005).
This excludes needle roller/axial deep groove ball bearings of the types NX and NX..-Z, which are not standardised.

Chamfer dimensions

The limiting dimensions for chamfer dimensions correspond to DIN 620-6:2004. Overview and limiting values ➤137|7.11.
Nominal value of chamfer dimension ➤950|.

Tolerances

The dimensional, geometrical and running tolerances of the bearings correspond to tolerance class Normal:

- Radial bearing component in accordance with ISO 492:2014 and DIN 620-2:1988. Tolerance values in accordance with ISO 492 ➤124|▦8
- Axial bearing component in accordance with ISO 199:2014 and DIN 620-3:1982. Tolerance values in accordance with ISO 199 ➤135|▦25

This excludes:

- NKIB, in this instance the bore d_1 of the narrow inner ring and the width (–0,3 mm) over both inner rings
- NKX and NKXR, in this instance the diameters D_1, D_2

2.12 Suffixes

Suffixes describe the design and features of a bearing in more detail.

▦4 *Suffixes and corresponding descriptions*

Suffix	Description of suffix	
TV	Bearing with radial cage made from glass fibre reinforced polyamide 66	Standard
XL	X-life bearing	
Z	Bearing with end cap, axial bearing component greased with lithium complex soap grease to GA08	

2.13 Structure of bearing designation

With ***medias*** interchange, equivalent Schaeffler bearing designations can be determined for bearing designations from other rolling bearing manufacturers *https://www.schaeffler.de/std/1B69*.

✎ *Examples of composition of bearing designation*

The designation of bearings follows a set model. Examples ➤941|⧉14 to ➤942|⧉16. The composition of designations is subject in part to DIN 623-1 ➤102|⧉10.

⧉14 *Needle roller/axial deep groove ball bearing without inner ring, for grease lubrication: designation structure*

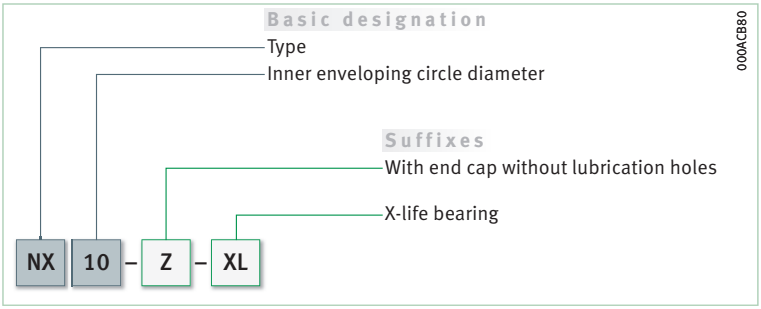

⧉15 *Needler roller/axial cylindrical roller bearing, with end cap, with recommended inner ring: designation structure*

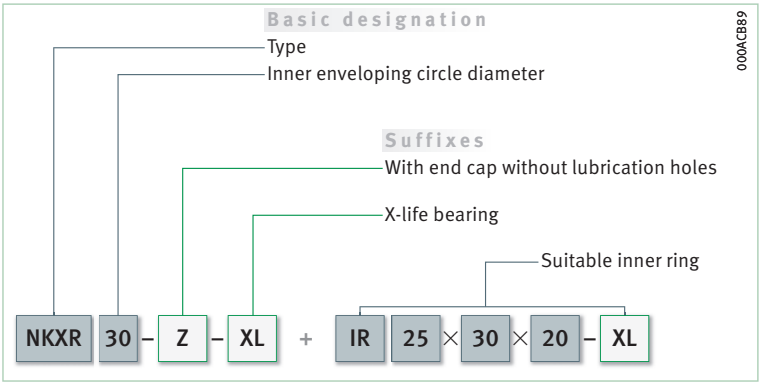

16
Needle roller/angular contact ball bearing, double direction, with standard inner ring: designation structure

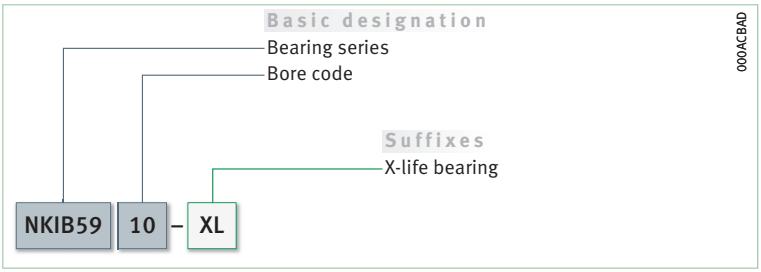

2.14 Dimensioning

Equivalent dynamic bearing load

Separate calculation of the rating life for radial and axial bearing components

In the case of combined needle roller bearings, the rating life of the radial bearing and axial bearing component must always be calculated separately ➤*942*| *1* and ➤*942*| *2*. The lower value then applies in each case to the bearing position.

$P = F_r$ and F_a respectively under purely radial load and purely axial load of constant magnitude and direction

The basic rating life equation $L = (C/P)^p$ used in the dimensioning of bearings under dynamic load assumes a concentrically acting load of constant magnitude and direction. In the case of radial bearings, this is a purely radial load F_r, while in the case of axial bearings it is a purely axial load F_a. In order to calculate the fatigue rating life for combined needle roller bearings, the bearing load F_r or F_a ($P_r = F_r$ or $P_a = F_a$) is therefore used in the rating life equation for P ➤*942*| *1* and ➤*942*| *2*.

Radial bearings

The radial component of the combined needle roller bearing may only be subjected to radial load. For the calculation of P_r ➤*942*| *1*.

1
Equivalent dynamic load

$$P_r = F_r$$

Legend

P_r	N	Equivalent dynamic bearing load for the radial bearing
F_r	N	Radial load.

Axial bearing component

The axial bearing can only be subjected to axial load. For the calculation of P_a under a concentrically acting axial load ➤*942*| *2*.
For needle roller/angular contact ball bearings, the axial load F_a must not exceed $0{,}25 \cdot F_r$.

2
Equivalent dynamic load

$$P_a = F_a$$

Legend

P_a	N	Equivalent dynamic bearing load for the axial bearing component
F_a	N	Axial load.

Equivalent static bearing load

The equivalent static bearing load must be calculated for both the radial bearing and the axial bearing component ➤*942*| *3* and ➤*942*| *4*.

3
Equivalent static load

$$P_{0r} = F_{0r}$$

4
Equivalent static load

$$P_{0a} = F_{0a}$$

Legend

P_{0r}	N	Equivalent static bearing load for the radial bearing
F_{0r}	N	Largest radial load present (maximum load)
P_{0a}	N	Equivalent static bearing load for the axial bearing component
F_{0a}	N	Largest axial load present (maximum load).

Static load safety factor

✎ *S_{0a} for needle roller/ angular contact ball bearings*

In addition to the basic rating life L (L_{10h}), it is also always necessary to check the static load safety factor S_0 ➤*943*|*5*. The calculation must be carried out for both the radial bearing (S_{0r}) and the axial bearing component (S_{0a}). The axial static load safety factor S_{0a} must be > 1,5.

5
Static load safety factor

$$S_0 = \frac{C_0}{P_0}$$

Legend

S_{0r}, S_{0a}	–	Static load safety factor
C_{0r}, C_{0a}	N	Basic static load rating
P_{0r}, P_{0a}	N	Equivalent static bearing load.

2.15 Minimum load

Minimum radial load

✎ *In order to prevent damage due to slippage, a minimum radial load of $P > C_{0r}/60$ is required*

In order that no slippage occurs between the contact partners, the radial bearing component must be constantly subjected to a sufficiently high load. For continuous operation, experience shows that a minimum radial load of the order of $P > C_{0r}/60$ is necessary. In most cases, however, the radial load is already higher than the requisite minimum load due to the weight of the supported parts and the external forces.

If the minimum radial load is lower than indicated above, please consult Schaeffler.

Minimum axial load

The axial component of the bearing arrangement must be preloaded to 1% of the axial basic static load rating C_{0a}. Basic load ratings C_{0a} ➤*950*|▦.

2.16 Design of bearing arrangements

✎ *Support bearing rings over their entire circumference and width*

In order to allow full utilisation of the load carrying capacity of the bearings and achieve the requisite rating life, the bearing rings must be rigidly and uniformly supported by means of contact surfaces over their entire circumference and over the entire width of the raceway. Support can be provided by means of a cylindrical seating surface. The seating and contact surfaces should not be interrupted by grooves, holes or other recesses. The accuracy of mating parts must meet specific requirements ➤*944*|▦ *5* to ➤*945*|▦ *8*.

Radial location

✎ *For secure radial location, tight fits are necessary*

In addition to supporting the rings adequately, the bearings must also be securely located in a radial direction, to prevent creep of the bearing rings on the mating parts under load. This is generally achieved by means of tight fits between the bearing rings and the mating parts. If the rings are not secured adequately or correctly, this can cause severe damage to the bearings and adjacent machine parts. Influencing factors, such as the conditions of rotation, magnitude of the load, internal clearance, temperature conditions, design of the mating parts and the mounting and dismounting options must be taken into consideration in the selection of fits.

The following information provided in Technical principles must be taken into consideration in the design of bearing arrangements:

- criteria for selection of fits ➤*146*
- conditions of rotation ➤*147*
- tolerance classes for cylindrical shaft seats (radial bearings) ➤*149*|▦ *2*
- shaft fits ➤*152*|▦ *6*
- tolerance classes for bearing seats in housings (radial bearings) ➤*150*|▦ *4*
- housing fits ➤*160*|▦ *7*

Axial location

The bearings must also be securely located in an axial direction

As a tight fit alone is not normally sufficient to also locate the bearing rings securely on the shaft and in the housing bore in an axial direction, this must usually be achieved by means of an additional axial location or retention method. The axial location of the bearing rings must be matched to the type of bearing arrangement. Shaft and housing shoulders, retaining rings etc., are fundamentally suitable ➤*935*|*10*, ➤*936*|*11* and ➤*945*|*18*. For locating bearings and for bearings with a split inner ring (type NKIB), axial abutment of the bearing rings on both sides is particularly important.

Types NX and NX..-Z

Axial location by snap ring

With types NX and NX..-Z, the retaining ring is inserted in the annular slot in the bearing outer ring ➤*944*|*17*. Snap rings which are inserted in the slot are a particularly compact and cost-effective way of locating the bearings axially in the housing. Suitable snap rings ➤*950*. The snap rings must be ordered in addition to the bearing.

17
Combined needle roller bearing NX with a retaining ring located axially in the housing

① *Annular slot with retaining ring*

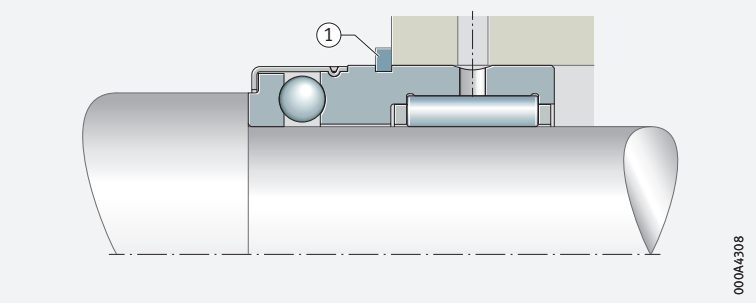

Type NKX, NKX..-Z

The axial location of these bearings in one direction can take place by means of the needle roller bearing with integrated housing locating washer.

Dimensional, geometrical and running accuracy of cylindrical bearing seats (bearings with inner ring)

Tolerance classes and surface designs for the shaft and the housing bore ➤*944*|*5* and ➤*944*|*6*.

5
Tolerance classes and surface design for the shaft – bearings with inner ring

Series	Shaft tolerance	Roundness tolerance max.	Parallelism tolerance max.
NKIA, NKIB	k6 Ⓔ	IT4/2	IT4
NX, NKX, NKXR			

6
Tolerance classes and surface design for the housing bore

Series	Bore tolerance to ISO 286-2	Roundness tolerance max.	Parallelism tolerance max.
NKIA, NKIB	M6 Ⓔ	IT5/2	IT4
NX, NKX, NKXR	K6 Ⓔ, M6 Ⓔ (for rigid bearing arrangements)		

7
Numerical values for ISO standard tolerances (IT grades) to ISO 286-1:2010

IT grade	Nominal dimension in mm				
	over **6**	**10**	**18**	**30**	**50**
	incl. **10**	**18**	**30**	**50**	**80**
	Values in µm				
IT4	4	5	6	7	8
IT5	6	8	9	11	13
IT6	9	11	13	16	19
IT7	15	18	21	25	30

Roughness of cylindrical bearing seating surfaces

Ra must not be too high

The roughness of the bearing seats must be matched to the tolerance class of the bearings. The mean roughness value Ra must not be too high, in order to maintain the interference loss within limits. The shafts must be ground, while the bores must be precision turned. Guide values as a function of the IT grade of bearing seating surfaces ➤945|⊞8.

8
Roughness values for cylindrical bearing seating surfaces – guide values

Nominal diameter of the bearing seat d (D) mm		Recommended mean roughness value for ground bearing seats Ramax µm			
		Diameter tolerance (IT grade)			
over	incl.	IT7	IT6	IT5	IT4
–	80	1,6	0,8	0,4	0,2

Mounting dimensions

The contact surfaces for the rings must be of sufficient height

The mounting dimensions of the shaft and housing shoulders, spacer rings and retaining rings etc., must ensure that the contact surfaces for the bearing rings are of sufficient height. Proven mounting dimensions for the radii and diameters of abutment shoulders are given in the product tables ➤950|⊞. These dimensions are limiting dimensions (maximum or minimum dimensions); the actual values should not be higher or lower than specified.

The transition from the bearing seat to the abutment shoulder must be designed with rounding to DIN 5418 or an undercut to DIN 509. The maximum chamfer dimensions for the inner rings in accordance with DIN 620-6 must be taken into consideration.

For NKX and NKXR, the axial bearing component seat must be free in the housing

In order to avoid double fits, the diameter of the contact surface for the housing locating washer in the adjacent construction must be at least +0,5 mm larger than dimension D_1 and D_2 of the bearing washer in bearings NKX and NKXR ➤945|18. Values for diameters D_1 and D_2 ➤950|⊞.

18
Free housing locating washer in the adjacent construction for NKX and NKXR

D_1 = *dimension of housing locating washer without end cap*

D_2 = *dimension of housing locating washer with end cap*

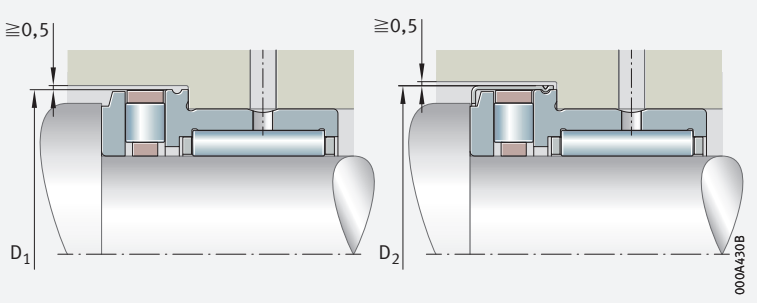

Raceway for bearings without an inner ring (direct bearing arrangement)

Produce the raceway as a rolling bearing raceway

Where needle roller bearings without an inner ring are used (so-called direct bearing arrangements), the rolling elements run directly on the shaft. In these bearings, the raceway for the rolling elements on the shaft must be produced as a rolling bearing raceway (hardened and ground). Tolerances and surface designs are shown in ➤945|⊞9. The surface hardness of the raceway must be 670 HV to 840 HV, the hardening depth CHD or SHD must be sufficiently large. If the shaft cannot be produced as a raceway, the bearings can be combined with inner rings IR ➤930|2.1 and ➤950|⊞.

9
Tolerance classes and surface design for the shaft (direct bearing arrangement) – without inner ring

Series	Shaft tolerance	Roundness tolerance max.	Parallelism tolerance max.	Recommended mean roughness value Ramax (Rzmax) µm
NX, NKX, NKXR	k6 Ⓔ	IT3	IT3	0,1 (0,4)

Shaft raceway designed in accordance with DIN 617

If the surface of the shaft raceway is produced to DIN 617, the basic load ratings C_r in the product tables must be reduced by 15%.

Steels for the raceway

Through hardening steels

Through hardening steels in accordance with ISO 683-17 (e.g. 100Cr6) are suitable as materials for rolling bearing raceways in direct bearing arrangements. These steels can also be surface layer hardened.

Case hardening steels

Case hardening steels must correspond to DIN EN ISO 683-17 (such as 17MnCr5, 18CrNiMo7-6) or DIN EN ISO 683-3 (such as 16MnCr5).

Steels for inductive surface layer hardening

For flame and induction hardening, steels in accordance with DIN EN ISO 683-17 (e.g. C56E2, 43CrMo4) or DIN 17212 (e.g. Cf53) should be used.

Surface hardness and hardening depth

Nominal surface hardness: ≧ 670 HV

The requisite minimum surface hardness of 670 HV is valid for raceways, axial washers and shaft shoulders. Steels hardened by means of case, flame or induction hardening must have a surface hardness of 670 HV to 840 HV and an adequate hardening depth CHD or SHD.

Raceway hardness of less than 670 HV

If the raceway fulfils the requirements for rolling bearing materials but the raceway hardness is less than 670 HV (58 HRC), the static and dynamic load carrying capacity of the bearing is reduced. In order to determine the dynamic and static load carrying capacity of the bearing arrangement, the basic dynamic load rating C of the bearings must be multiplied by the reduction factor f_H (dynamic hardness factor) and the basic static load rating C_{0r} by the reduction factor f_{H0} (static hardness factor).

19
Dynamic hardness factor for raceway hardness values of less than 670 HV

f_H = *dynamic hardness factor*
HV, HRC = *surface hardness*

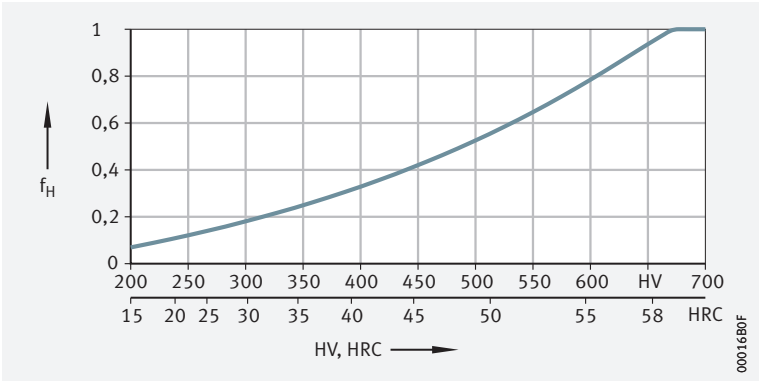

20
Static hardness factor for raceway hardness values of less than 670 HV

f_{H0} = *static hardness factor*
HV, HRC = *surface hardness*

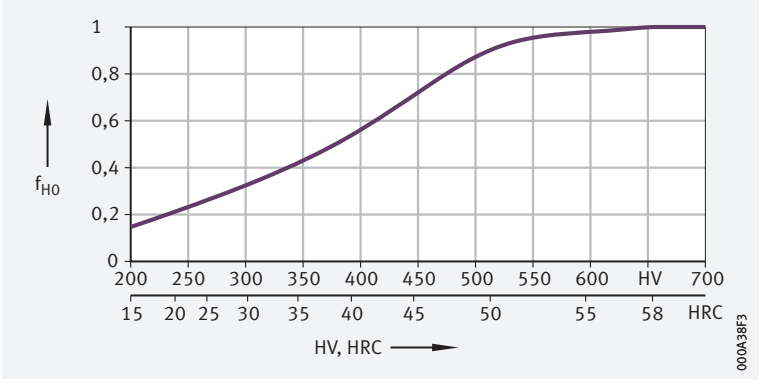

Determining the case hardening depth

Approximation value for case hardening depth

The reference value for the load present is the equivalent stress in accordance with the distortion energy hypothesis (DEH) as a function of the rolling element diameter D_w and the magnitude of the load.

For calculation of the case hardening depth CHD, the following applies:

f 6
Case hardening depth

$$CHD \geqq 0{,}052 \cdot D_w$$

Legend

CHD	mm	Case hardening depth
D_w	mm	Rolling element diameter.

The local hardness must always be above the local requisite hardness, which can be calculated from the equivalent stress.

Determining the surface hardening depth

In these surface hardening methods, the load and contact geometry must be taken into consideration when determining the requisite hardening depth.

For the calculation of the surface hardening depth SHD applies:

f 7
Surface hardening depth

$$SHD \geqq 140 \cdot D_w / R_{p0,2}$$

Legend

SHD	mm	Surface hardening depth
D_w	mm	Rolling element diameter
$R_{p0,2}$	N/mm²	Yield point of base material.

2.17 Mounting and dismounting

The mounting and dismounting options for combined needle roller bearings, by thermal, hydraulic or mechanical methods, must be taken into consideration in the design of the bearing position.

As the bearings are not self-retaining, they are easy to mount

Combined needle roller bearings without an end cap are not self-retaining. As a result, the bearing parts can be mounted separately from each other ➤*930|2.1*. This gives simplified mounting of the bearings, especially when the two bearing rings have a tight fit.

Schaeffler Mounting Handbook

Rolling bearings must be handled with great care

Rolling bearings are well-proven precision machine elements for the design of economical and reliable bearing arrangements, which offer high operational security. In order that these products can function correctly and achieve the envisaged operating life without detrimental effect, they must be handled with care.

The Schaeffler Mounting Handbook MH 1 gives comprehensive information about the correct storage, mounting, dismounting and maintenance of rotary rolling bearings *https://www.schaeffler.de/std/1D53*. It also provides information which should be observed by the designer, in relation to the mounting, dismounting and maintenance of bearings, in the original design of the bearing position. This book is available from Schaeffler on request.

2.18 Legal notice regarding data freshness

✎ The further development of products may also result in technical changes to catalogue products

Of central interest to Schaeffler is the further development and optimisation of its products and the satisfaction of its customers. In order that you, as the customer, can keep yourself optimally informed about the progress that is being made here and with regard to the current technical status of the products, we publish any product changes which differ from the printed version in our electronic product catalogue.

§ We therefore reserve the right to make changes to the data and illustrations in this catalogue. This catalogue reflects the status at the time of printing. More recent publications released by us (as printed or digital media) will automatically precede this catalogue if they involve the same subject. Therefore, please always use our electronic product catalogue to check whether more up-to-date information or modification notices exist for your desired product.

Link to electronic product catalogue

The following link will take you to the Schaeffler electronic product catalogue: *https://medias.schaeffler.com*.

2.19 Further information

In addition to the data in this chapter, the following chapters in Technical principles must also be observed in the design of bearing arrangements:

- Determining the bearing size ➤*34*
- Rigidity ➤*54*
- Friction and increases in temperature ➤*56*
- Speeds ➤*64*
- Bearing data ➤*97*
- Lubrication ➤*70*
- Sealing ➤*185*
- Design of bearing arrangements ➤*141*
- Mounting and dismounting ➤*194*



Needle roller/axial deep groove ball bearings

Without inner ring

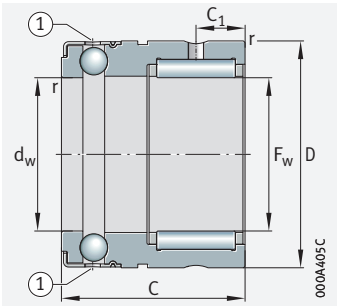

NX

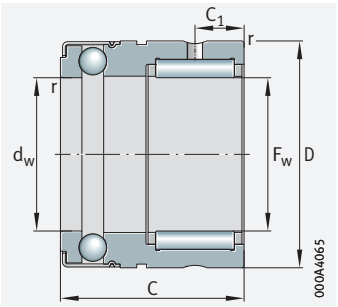

NX..-Z

F_w = 7 – 35 mm

Main dimensions			Basic load ratings				Fatigue limit load		Limiting speed	Mass	Designation ➤941|2.12 ➤941|2.13 X-life ➤934	
F_w	D	C	radial		axial		C_{ur}	C_{ua}	n_G	m	For oil lubrication	For grease lubrication
		–0,25	dyn. C_r	stat. C_{0r}	dyn. C_a	stat. C_{0a}						
			N	N	N	N	N	N	min^{-1}	≈ g		
7	14	18	3 250	2 650	3 150	4 300	420	195	15 000	14	**NX7-TV-XL**	**NX7-Z-TV-XL**
10	19	18	5 000	3 700	4 600	7 200	730	330	11 000	25	**NX10-XL**	**NX10-Z-XL**
12	21	18	5 400	4 300	4 850	8 200	840	375	9 500	28	**NX12-XL**	**NX12-Z-XL**
15	24	28	12 100	12 700	5 600	10 400	2 360	475	8 000	48	**NX15-XL**	**NX15-Z-XL**
17	26	28	13 500	15 000	5 800	11 500	2 800	530	7 500	53	**NX17-XL**	**NX17-Z-XL**
20	30	28	14 600	17 500	7 000	14 700	3 300	670	6 500	68	**NX20-XL**	**NX20-Z-XL**
25	37	30	16 800	22 400	11 100	24 300	4 200	1 110	4 900	115	**NX25-XL**	**NX25-Z-XL**
30	42	30	25 500	36 000	11 700	28 000	6 400	1 270	4 300	130	**NX30-XL**	**NX30-Z-XL**
35	47	30	27 500	41 500	12 400	32 500	7 400	1 480	3 700	160	**NX35-XL**	**NX35-Z-XL**

medias *https://www.schaeffler.de/std/1F9A*

① Holes for lubricating oil

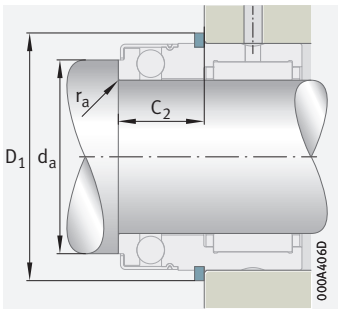

Mounting dimensions
Snap ring in outer ring

Dimensions				Mounting dimensions				Designation	
F_w	C_1	d_w E8	r min.	C_2	D_1	d_a	r_a max.	Recommended inner rings ➤*958*	Suitable snap rings
7	4,7	7	0,3	10	16,5	9,6	0,3	–	**WR14, SW14**
10	4,7	10	0,3	10	21,9	14,6	0,3	**IR6×10×10-IS1-XL**	**WR19, SW19**
12	4,7	12	0,3	10	23,7	16,6	0,3	**IR8×12×10-IS1-XL**	**WR21, SW21**
15	8	15	0,3	12,2	26,5	19	0,3	**IR12×15×16-XL**	**WR24, SW24**
17	8	17	0,3	12,2	28,5	21	0,3	**IR14×17×17-XL**	**WR26, SW26**
20	8	20	0,3	12,2	33,6	25	0,3	**IR17×20×16-XL**	**WR30, SW30**
25	8	25	0,3	14,2	40,4	31,6	0,3	**IR20×25×16-IS1-XL**	**WR37, SW37**
30	10	30	0,3	14,2	45,1	36,5	0,3	**IR25×30×20-XL**	**WR42, SW42**
35	10	35	0,3	14,2	50,1	40,5	0,3	**IR30×35×20-XL**	**WR47, SW47**

Needle roller/axial deep groove ball bearings

Without inner ring
With or without end cap

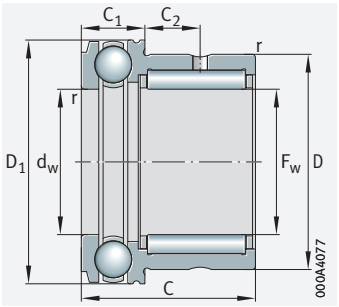

NKX

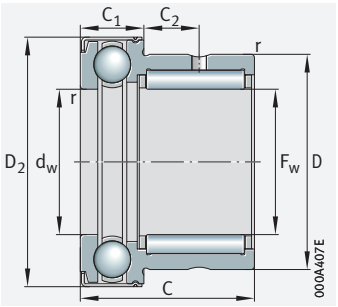

NKX..-Z

F_w = 10 – 70 mm

Main dimensions			Basic load ratings				Fatigue limit load		Limiting speed	Mass		Designation ➤941|2.12 ➤941|2.13 X-life ➤934	
			radial		axial					Without end cap	With end cap	Without end cap	With end cap
F_w	D	C	dyn. C_r	stat. C_{0r}	dyn. C_a	stat. C_{0a}	C_{ur}	C_{ua}	n_G	m	m		
		–0,25	N	N	N	N	N	N	min^{-1}	≈ g	≈ g		
10	19	23	7 000	7 800	10 000	14 000	1 330	690	12 400	34	36	**NKX10-TV-XL**	**NKX10-Z-TV-XL**
12	21	23	10 100	11 000	10 300	15 400	1 950	760	11 000	38	40	**NKX12-XL**	**NKX12-Z-XL**
15	24	23	12 100	12 700	10 500	16 800	2 360	830	9 500	44	47	**NKX15-XL**	**NKX15-Z-XL**
17	26	25	13 500	15 000	10 800	18 200	2 800	900	8 500	53	55	**NKX17-XL**	**NKX17-Z-XL**
20	30	30	18 600	23 800	14 200	24 700	4 200	1 220	7 500	83	90	**NKX20-XL**	**NKX20-Z-XL**
25	37	30	21 300	30 500	19 600	37 500	5 400	1 840	6 000	125	132	**NKX25-XL**	**NKX25-Z-XL**
30	42	30	25 500	36 000	20 400	42 000	6 400	2 090	5 000	141	148	**NKX30-XL**	**NKX30-Z-XL**
35	47	30	27 500	41 500	21 200	47 000	7 400	2 340	4 600	163	168	**NKX35-XL**	**NKX35-Z-XL**
40	52	32	29 500	47 000	27 000	63 000	8 400	3 100	4 000	200	208	**NKX40-XL**	**NKX40-Z-XL**
45	58	32	31 000	53 000	28 000	69 000	9 400	3 400	3 600	252	265	**NKX45-XL**	**NKX45-Z-XL**
50	62	35	43 000	74 000	29 000	75 000	12 900	3 750	3 300	280	300	**NKX50-XL**	**NKX50-Z-XL**
60	72	40	47 500	90 000	41 500	113 000	15 600	5 600	2 800	360	380	**NKX60-XL**	**NKX60-Z-XL**
70	85	40	50 000	92 000	43 000	127 000	16 000	6 300	2 400	500	520	**NKX70-XL**	**NKX70-Z-XL**

medias *https://www.schaeffler.de/std/1F9A*

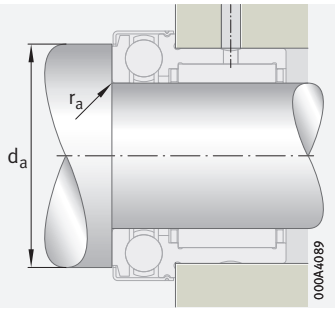

Mounting dimensions

Dimensions							Mounting dimensions		Designation
F_w	D_1 max.	D_2 max.	C_1 –0,2	C_2	d_w E8	r min.	d_a	r_a max.	Recommended inner rings ➤*958*
10	24,1	25,2	9	6,5	10	0,3	19,7	0,3	**IR7×10×16-XL**
12	26,1	27,2	9	6,5	12	0,3	21,7	0,3	**IR9×12×16-XL**
15	28,1	29,2	9	6,5	15	0,3	23,7	0,3	**IR12×15×16-XL**
17	30,1	31,2	9	8	17	0,3	25,7	0,3	**IR14×17×17-XL**
20	35,1	36,2	10	10,5	20	0,3	30,7	0,3	**IR17×20×20-XL**
25	42,1	43,2	11	9,5	25	0,6	37,7	0,6	**IR20×25×20-XL**
30	47,1	48,2	11	9,5	30	0,6	42,7	0,6	**IR25×30×20-XL**
35	52,1	53,2	12	9	35	0,6	47,7	0,6	**IR30×35×20-XL**
40	60,1	61,2	13	10	40	0,6	55,7	0,6	**IR35×40×20-XL**
45	65,2	66,5	14	9	45	0,6	60,5	0,6	**IR40×45×20-XL**
50	70,2	71,5	14	10	50	0,6	65,5	0,6	**IR45×50×25-XL**
60	85,2	86,5	17	12	60	1	80,5	1	**IR50×60×25-XL**
70	95,2	96,5	18	11	70	1	90,5	1	**IR60×70×25-XL**

Needle roller/axial cylindrical roller bearings

Without inner ring
With or without end cap

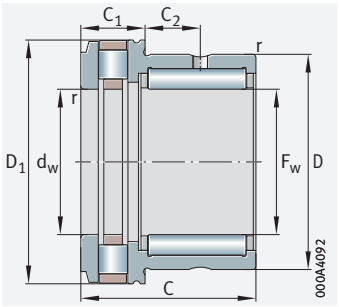

NKXR

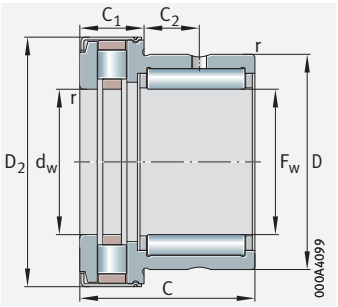

NKXR..-Z

F_w = 15 – 50 mm

Main dimensions			Basic load ratings				Limiting speed	Speed rating	Mass		Designation ➤941|2.12 ➤941|2.13 X-life ➤934	
			radial		axial				Without end cap	With end cap	Without end cap	With end cap
F_w	D	C	dyn. C_r	stat. C_{0r}	dyn. C_a	stat. C_{0a}	n_G	$n_{\vartheta r}$	m	m		
		–0,25	N	N	N	N	min^{-1}	min^{-1}	≈ g	≈ g		
15	24	23	12 100	12 700	14 400	28 500	13 000	6 500	42	45	**NKXR15-XL**	**NKXR15-Z-XL**
17	26	25	13 500	15 000	16 000	33 500	12 000	5 500	50	53	**NKXR17-XL**	**NKXR17-Z-XL**
20	30	30	18 600	23 800	25 000	53 000	10 000	4 200	80	84	**NKXR20-XL**	**NKXR20-Z-XL**
25	37	30	21 300	30 500	33 500	76 000	8 500	3 400	120	125	**NKXR25-XL**	**NKXR25-Z-XL**
30	42	30	25 500	36 000	35 500	86 000	7 500	2 900	135	141	**NKXR30-XL**	**NKXR30-Z-XL**
35	47	30	27 500	41 500	39 000	101 000	6 500	2 500	157	165	**NKXR35-XL**	**NKXR35-Z-XL**
40	52	32	29 500	47 000	56 000	148 000	6 000	2 000	204	214	**NKXR40-XL**	**NKXR40-Z-XL**
45	58	32	31 000	53 000	59 000	163 000	5 000	1 900	244	260	**NKXR45-XL**	**NKXR45-Z-XL**
50	62	35	43 000	74 000	62 000	177 000	4 800	1 700	268	288	**NKXR50-XL**	**NKXR50-Z-XL**

medias *https://www.schaeffler.de/std/1F9A*

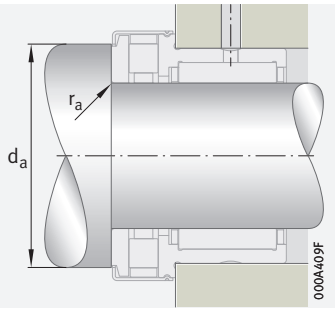

Mounting dimensions

	Fatigue limit load		Dimensions						Mounting dimensions		Designation
											Recommended inner rings ➤*958*
F_w	C_{ur}	C_{ua}	D_1	D_2	C_1	C_2	d_w	r	d_a	r_a	
	N	N	max.	max.	–0,2		E8	min.		max.	
15	2 360	4 050	28,1	29,2	9	6,5	15	0,3	23,7	0,3	**IR12×15×16-XL**
17	2 800	4 700	30,1	31,2	9	8	17	0,3	25,7	0,3	**IR14×17×17-XL**
20	4 200	7 500	35,1	36,2	10	10,5	20	0,3	30,7	0,3	**IR17×20×20-XL**
25	5 400	7 200	42,1	43,2	11	9,5	25	0,6	37,7	0,6	**IR20×25×20-XL**
30	6 400	8 200	47,1	48,2	11	9,5	30	0,6	42,7	0,6	**IR25×30×20-XL**
35	7 400	9 600	52,1	53,2	12	9	35	0,6	47,7	0,6	**IR30×35×20-XL**
40	8 400	14 800	60,1	61,2	13	10	40	0,6	55,7	0,6	**IR35×40×20-XL**
45	9 400	16 300	65,2	66,5	14	9	45	0,6	60,6	0,6	**IR40×45×20-XL**
50	12 900	17 700	70,2	71,5	14	10	50	0,6	65,5	0,6	**IR45×50×25-XL**

Needle roller/angular contact ball bearings

With inner ring

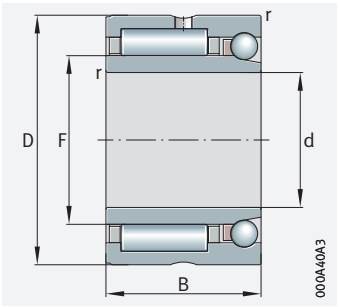

NKIA
Single direction

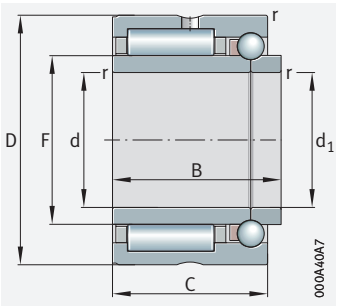

NKIB
Double direction

d = 12 – 70 mm

Main dimensions			Basic load ratings				Fatigue limit load		Limiting speed	Speed rating	Mass	Designation ➤941|2.12 ➤941|2.13 X-life ➤934
d	D	B	radial		axial		C_{ur}	C_{ua}	n_G	$n_{\vartheta r}$	m	
			dyn. C_r	stat. C_{0r}	dyn. C_a	stat. C_{0a}						
			N	N	N	N	N	N	min^{-1}	min^{-1}	≈ g	
12	24	16	8 600	8 300	2 700	3 450	1 660	157	23 600	21 000	40	**NKIA5901-XL**
	24	17,5	8 600	8 300	2 700	3 450	1 660	157	23 600	21 000	43	**NKIB5901-XL**
15	28	18	12 000	13 600	2 900	4 200	2 470	191	21 600	17 000	50	**NKIA5902-XL**
	28	20	12 000	13 600	2 900	4 200	2 470	191	21 600	17 000	52	**NKIB5902-XL**
17	30	18	12 400	14 600	3 150	4 900	2 650	222	20 600	15 000	56	**NKIA5903-XL**
	30	20	12 400	14 600	3 150	4 900	2 650	222	20 600	15 000	58	**NKIB5903-XL**
20	37	23	23 700	25 500	4 900	7 400	4 700	335	17 200	14 000	103	**NKIA5904-XL**
	37	25	23 700	25 500	4 900	7 400	4 700	335	17 200	14 000	107	**NKIB5904-XL**
22	39	23	26 000	29 500	5 300	8 600	5 400	395	16 100	12 000	118	**NKIA59/22-XL**
	39	25	26 000	29 500	5 300	8 600	5 400	395	16 100	12 000	122	**NKIB59/22-XL**
25	42	23	26 500	31 500	5 400	9 300	5 800	420	14 600	12 000	130	**NKIA5905-XL**
	42	25	26 500	31 500	5 400	9 300	5 800	420	14 600	12 000	134	**NKIB5905-XL**
30	47	23	28 500	35 500	5 900	11 200	6 600	510	12 700	10 000	147	**NKIA5906-XL**
	47	25	28 500	35 500	5 900	11 200	6 600	510	12 700	10 000	151	**NKIB5906-XL**
35	55	27	35 500	50 000	7 400	14 900	9 600	680	10 900	9 000	243	**NKIA5907-XL**
	55	30	35 500	50 000	7 400	14 900	9 600	680	10 900	9 000	247	**NKIB5907-XL**
40	62	30	48 500	67 000	9 200	19 400	11 700	880	9 600	7 500	315	**NKIA5908-XL**
	62	34	48 500	67 000	9 200	19 400	11 700	880	9 600	7 500	320	**NKIB5908-XL**
45	68	30	51 000	73 000	9 600	21 400	12 900	970	8 700	7 000	375	**NKIA5909-XL**
	68	34	51 000	73 000	9 600	21 400	12 900	970	8 700	7 000	380	**NKIB5909-XL**
50	72	30	53 000	80 000	10 100	24 300	14 100	1 110	8 000	6 500	380	**NKIA5910-XL**
	72	34	53 000	80 000	10 100	24 300	14 100	1 110	8 000	6 500	385	**NKIB5910-XL**
55	80	34	65 000	100 000	12 100	29 500	17 600	1 340	7 300	6 000	550	**NKIA5911-XL**
	80	38	65 000	100 000	12 100	29 500	17 600	1 340	7 300	6 000	555	**NKIB5911-XL**
60	85	34	68 000	108 000	12 400	32 000	19 100	1 450	6 800	5 500	590	**NKIA5912-XL**
	85	38	68 000	108 000	12 400	32 000	19 100	1 450	6 800	5 500	595	**NKIB5912-XL**
65	90	34	69 000	112 000	12 800	34 000	19 900	1 560	6 300	5 500	635	**NKIA5913-XL**
	90	38	69 000	112 000	12 800	34 000	19 900	1 560	6 300	5 500	640	**NKIB5913-XL**
70	100	40	95 000	156 000	16 800	44 500	28 000	2 020	5 800	4 900	980	**NKIA5914-XL**
	100	45	95 000	156 000	16 800	44 500	28 000	2 020	5 800	4 900	985	**NKIB5914-XL**

medias *https://www.schaeffler.de/std/1F9A*

	Dimensions			
	d	F	C	r min.
	12	16	–	0,3
		16	16	0,3
	15	20	–	0,3
		20	18	0,3
	17	22	–	0,3
		22	18	0,3
	20	25	–	0,3
		25	23	0,3
	22	28	–	0,3
		28	23	0,3
	25	30	–	0,3
		30	23	0,3
	30	35	–	0,3
		35	23	0,3
	35	42	–	0,6
		42	27	0,6
	40	48	–	0,6
		48	30	0,6
	45	52	–	0,6
		52	30	0,6
	50	58	–	0,6
		58	30	0,6
	55	63	–	1
		63	34	1
	60	68	–	1
		68	34	1
	65	72	–	1
		72	34	1
	70	80	–	1
		80	40	1



3 Inner rings

Inner rings are used where:

- the shaft cannot be used as a rolling bearing raceway for needle roller and cage assemblies, drawn cup needle roller bearings with open ends, drawn cup needle roller bearings with closed end and needle roller bearings (it cannot be hardened and ground)
- needle roller bearings must be combined with wider inner rings in order to allow larger axial displacements of the shaft in relation to the housing (e.g. in bearings with a non-locating bearing function)
- optimum running surfaces are required for seal lips ➤*958*|🗀 *1* and ➤*960*|🗀 *4*

🗀 ***1***
Wider inner ring, outside surface used as raceway for seal lip

① *Inner ring IR*
② *Sealing ring G*

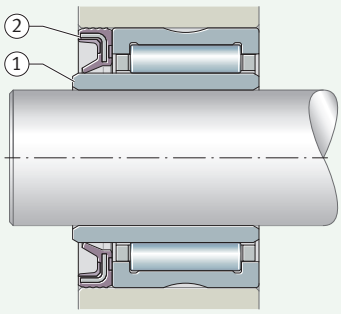

3.1 Product design

✎ *Design variants*

The bearing components are available as:

- inner ring IR ➤*958*|🗀 *2*
- inner ring LR ➤*959*|🗀 *3*

Inner rings IR

✎ *The raceway is precision machined*

Inner rings IR are made from hardened rolling bearing steel and have precision machined raceways ➤*958*|🗀 *2*. Chamfers on the end faces facilitate the matching of the rings with the needle roller and cage assembly or of the bearing ring with the needle roller set and prevent damage to the seal lips of the bearings. Inner rings are available with and without a lubrication hole ➤*958*|🗀 *2*. Rings with a lubrication hole have the suffix IS1 ➤*961*|*3.5*, ➤*964*|▦.

Inner rings are also available by agreement with several lubrication holes.

🗀 ***2***
Inner rings IR

① *Inner ring without lubrication hole*
② *Inner ring with lubrication hole*

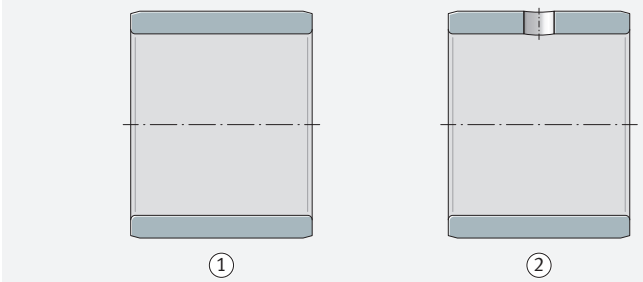

X-life premium quality

Inner rings IR are supplied in the X-life design. The quality of the inner rings corresponds to the quality of X-life needle roller bearings. X-life inner rings include the suffix XL in the designation ➤*962*|*6*.

X-life indicates a high product performance density and thus a particularly significant benefit to the customer. Further information on X-life ➤*10*.

Inner rings with the machining allowance "z" (special design)

z = a material allowance for finish grinding of the rings after fitting, where there are high demands on running accuracy

Inner rings are also available as a special design with a machining allowance "z" on the raceway. These inner rings have the suffix VGS ➤*961*|*3.5*. The size of the machining allowance is dependent on the diameter of the inner ring raceway ➤*959*|*1*. The raceway is finish ground once the rings have been fitted, if high demands are placed on the running accuracy of the bearings.

1
Machining allowance

Raceway diameter F mm		Machining allowance z mm	Preground raceway diameter F_{VGS}
over	incl.		
–	50	0,1	F_{VGS} = F + z (tolerance h7 Ⓔ)
50	80	0,15	
80	180	0,2	
180	250	0,25	
250	315	0,3	
315	400	0,35	
400	500	0,4	

Inner rings LR

The raceway is ground

Inner rings LR are produced from rolling bearing steel and are hardened ➤*959*|*3*. The bore and running surface are ground. The end faces are not ground (turned) and the edges are broken. These rings have larger tolerances than the inner rings IR. As a result, they are particularly suitable for applications that allow larger width tolerances and less demanding requirements for axial runout. It is here that they give particularly economical bearing arrangements.

Catalogue HR 1 does not contain separate product tables for inner rings LR. Available inner rings LR are listed in the product tables for drawn cup needler roller bearings with open ends and with closed end ➤*866*|.
For other available dimensions, please consult Schaeffler.

3
Inner ring LR

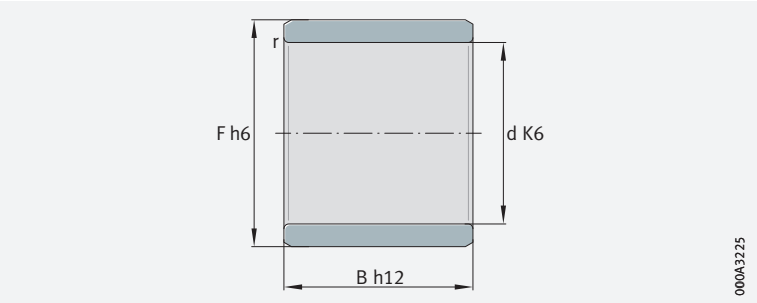

d = *bore diameter*
F = *raceway diameter*
B = *width*

Wider inner rings

Advantages of wider inner rings

The inner rings are available in several widths within the respective bore diameters ➤*964*. Wider inner rings:

- permit larger axial displacements of the shaft in relation to the housing
- can be used as the running surface for the lips of contact seals, for example when using sealing rings G, GR and SD ➤*960*

4
Wider inner ring, also used as running surface for sealing rings

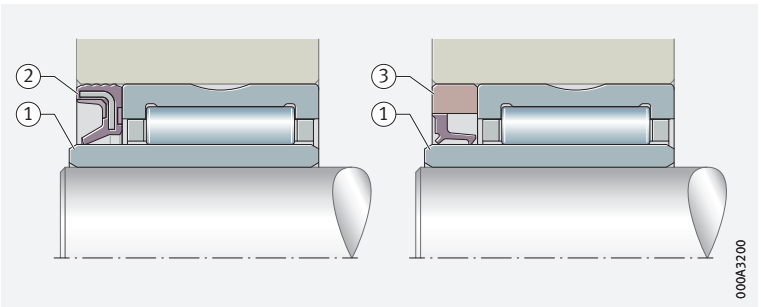

① *Wider inner ring IR*
② *Sealing ring G*
③ *Sealing ring SD*

3.2 Temperature range

Limiting values

The operating temperature of the inner rings is limited by the dimensional stability of the ring material ➤*960*.

2
Permissible temperature ranges

Operating temperature	Inner rings
	–30 °C to +120 °C

In the event of anticipated temperatures which lie outside the stated values, please contact Schaeffler.

3.3 Internal clearance

CN for the combination of needler roller bearing/inner ring

The radial internal clearance is dependent on the bearing design used in combination with the inner ring. When combined with Schaeffler needle roller bearings, inner rings have a radial internal clearance of CN ➤*960*.

C2 to C3 for the combination of drawn cup needle roller bearing with open ends or closed end/inner ring

When combined with Schaeffler drawn cup needle roller bearings with open ends or closed end, inner rings have an internal clearance of C2 to C3, depending on the raceway diameter ➤*960*.

The values for radial internal clearance correspond to DIN 620-4:2004 (ISO 5753-1:2009). These are valid for bearings which are free from load and measurement forces (without elastic deformation).

3
Radial internal clearance

Nominal bore diameter		Radial internal clearance							
d		C2 (Group 2)		CN (Group N)		C3 (Group 3)		C4 (Group 4)	
mm		µm		µm		µm		µm	
over	incl.	min.	max.	min.	max.	min.	max.	min.	max.
–	24	0	25	20	45	35	60	50	75
24	30	0	25	20	45	35	60	50	75
30	40	5	30	25	50	45	70	60	85
40	50	5	35	30	60	50	80	70	100

continued ▼

3 *Radial internal clearance*

Nominal bore diameter d mm		Radial internal clearance							
		C2 (Group 2) µm		CN (Group N) µm		C3 (Group 3) µm		C4 (Group 4) µm	
over	incl.	min.	max.	min.	max.	min.	max.	min.	max.
50	65	10	40	40	70	60	90	80	110
65	80	10	45	40	75	65	100	90	125
80	100	15	50	50	85	75	110	105	140
100	120	15	55	50	90	85	125	125	165
120	140	15	60	60	105	100	145	145	190
140	160	20	70	70	120	115	165	165	215
160	180	25	75	75	125	120	170	170	220
180	200	35	90	90	145	140	195	195	250
200	225	45	105	105	165	160	220	220	280
225	250	45	110	110	175	170	235	235	300
250	280	55	125	125	195	190	260	260	330
280	315	55	130	130	205	200	275	275	350
315	355	65	145	145	225	225	305	305	385
355	400	100	190	190	280	280	370	370	460
400	450	110	210	210	310	310	410	410	510

continued ▲

3.4 Tolerances

The tolerances for the dimensional and running accuracy of inner rings IR correspond to tolerance class Normal in accordance with ISO 492:2014. Tolerance values in accordance with ISO 492 ➤*124*|▦*8*.

3.5 Suffixes

Suffixes describe the design and features of a bearing in more detail.

4 *Suffixes and corresponding descriptions*

Suffix	Description of suffix	
C2	Radial internal clearance C2 (smaller than normal)	Standard or special design, depending on the rolling bearing used
C3	Radial internal clearance C3 (larger than normal)	
C4	Radial internal clearance C4 (larger than C3)	
EGS	Surface ground free from spiral marks for rotary shaft seals to DIN 3760 and DIN 3761	Special design, available by agreement
IS1	With lubrication hole	Standard for IR inner rings within certain limits
VGS	Machining allowance “z” on raceway ➤*959*|▦*1*	Special design, available by agreement

3.6 Structure of bearing designation

With ***medias*** interchange, equivalent Schaeffler bearing designations can be determined for bearing designations from other rolling bearing manufacturers *https://www.schaeffler.de/std/1B69*.

The designation of inner rings follows a set model. Examples ➤*962*| 5 and ➤*962*| 6.

5
Inner ring LR: designation structure

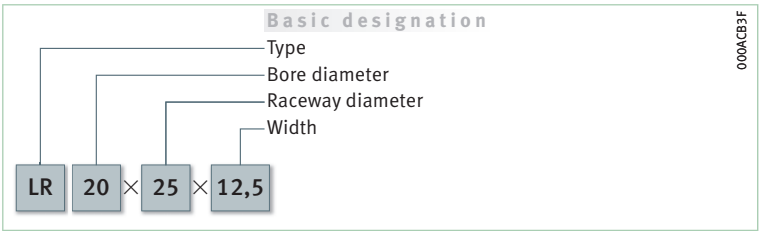

6
Inner ring IR with lubrication hole: designation structure

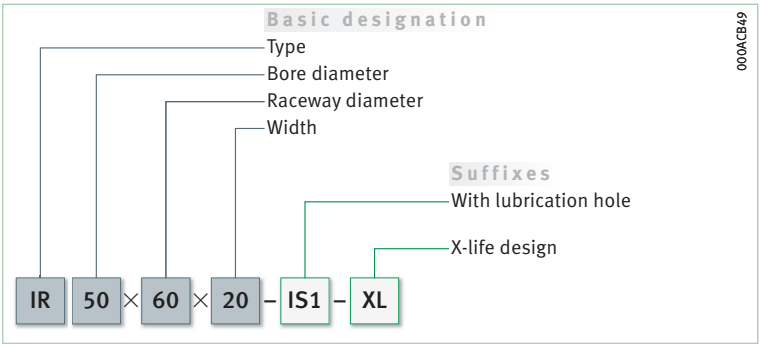

3.7 Design of bearing arrangements

Axial location of inner rings

✎*Always locate inner rings axially on both sides*

The bearing rings must not be allowed to undergo lateral creep. In order to reliably prevent axial displacements of the inner rings on the shaft where a tight or loose fit is present, these must be located axially on both sides. On one side, the rings can be abutted against a shaft shoulder and, for location on the opposing side, retaining rings, spacer rings or shaft nuts are suitable ➤*963*| 7.

✎*Design of adjacent parts*

The abutment shoulders for the rings should be sufficiently high and perpendicular to the bearing axis. The transition from the bearing seat to the abutment shoulder must be designed with rounding to DIN 5418 or an undercut to DIN 509. In this instance, the minimum values for the chamfer dimensions in the product tables must be observed ➤*964*|.

The overlap between the retaining rings and the end faces of the bearing rings must be sufficiently large ➤*963*| 7.

The maximum chamfer dimensions for the inner rings in accordance with DIN 620-6 must be taken into consideration.

7
Inner ring axially located on both sides

① *Retaining ring*
② *Drawn cup needle roller bearing with open ends HK*
③ *Shaft shoulder*
④ *Inner ring IR*

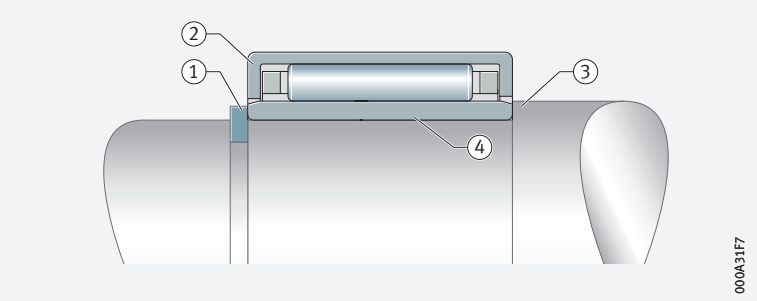

3.8 Mounting and dismounting

Rolling bearings must be handled with great care

Schaeffler Mounting Handbook

Rolling bearings are well-proven precision machine elements for the design of economical and reliable bearing arrangements, which offer high operational security. In order that these products can function correctly and achieve the envisaged operating life without detrimental effect, they must be handled with care.

The Schaeffler Mounting Handbook MH 1 gives comprehensive information about the correct storage, mounting, dismounting and maintenance of rotary rolling bearings *https://www.schaeffler.de/std/1D53*. It also provides information which should be observed by the designer, in relation to the mounting, dismounting and maintenance of bearings, in the original design of the bearing position. This book is available from Schaeffler on request.

3.9 Legal notice regarding data freshness

The further development of products may also result in technical changes to catalogue products

Of central interest to Schaeffler is the further development and optimisation of its products and the satisfaction of its customers. In order that you, as the customer, can keep yourself optimally informed about the progress that is being made here and with regard to the current technical status of the products, we publish any product changes which differ from the printed version in our electronic product catalogue.

We therefore reserve the right to make changes to the data and illustrations in this catalogue. This catalogue reflects the status at the time of printing. More recent publications released by us (as printed or digital media) will automatically precede this catalogue if they involve the same subject. Therefore, please always use our electronic product catalogue to check whether more up-to-date information or modification notices exist for your desired product.

Link to electronic product catalogue

The following link will take you to the Schaeffler electronic product catalogue: *https://medias.schaeffler.com*.

Inner rings

Without lubrication hole

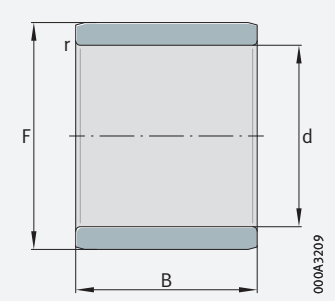

IR

d = 5 – 25 mm

Main dimensions				Mass	Designation ➤*961*|*3.5* ➤*962*|*3.6* X-life ➤*959*	Deviations for raceway F	
d	F	B	r	m		upper	lower
			min.	≈ g		µm	µm
5	8	12	0,3	2,8	**IR5×8×12-XL**	–7	–23
	8	16	0,3	3,7	**IR5×8×16-XL**	–7	–23
6	9	12	0,3	3	**IR6×9×12-XL**	–7	–23
	9	16	0,3	4,3	**IR6×9×16-XL**	–7	–23
7	10	10,5	0,3	3,1	**IR7×10×10,5-XL**	–7	–23
	10	12	0,3	3,6	**IR7×10×12-XL**	–7	–23
	10	16	0,3	4,9	**IR7×10×16-XL**	–7	–23
8	12	10,5	0,3	5	**IR8×12×10,5-XL**	–4	–18
	12	12,5	0,3	5,9	**IR8×12×12,5-XL**	–4	–18
9	12	12	0,3	4,4	**IR9×12×12-XL**	–4	–18
	12	16	0,3	6	**IR9×12×16-XL**	–4	–18
10	13	12,5	0,3	5,2	**IR10×13×12,5-XL**	–4	–18
	14	13	0,3	7,4	**IR10×14×13-XL**	–4	–18
	14	16	0,3	9,2	**IR10×14×16-XL**	–4	–18
	14	20	0,3	11,5	**IR10×14×20-XL**	–4	–18
12	15	12	0,3	5,7	**IR12×15×12-XL**	–4	–18
	15	12,5	0,3	6,1	**IR12×15×12,5-XL**	–4	–18
	15	16	0,3	7,6	**IR12×15×16-XL**	–4	–18
	15	16,5	0,3	8,1	**IR12×15×16,5-XL**	–4	–18
	15	22,5	0,3	10,9	**IR12×15×22,5-XL**	–4	–18
	16	13	0,3	8,5	**IR12×16×13-XL**	–4	–18
	16	16	0,3	10,7	**IR12×16×16-XL**	–4	–18
	16	20	0,3	13,5	**IR12×16×20-XL**	–4	–18
	16	22	0,3	14,9	**IR12×16×22-XL**	–4	–18
14	17	17	0,3	9,5	**IR14×17×17-XL**	–4	–18
15	18	16	0,3	9,4	**IR15×18×16-XL**	–4	–18
	18	16,5	0,3	9,8	**IR15×18×16,5-XL**	–4	–18
	19	16	0,3	12,9	**IR15×19×16-XL**	0	–12
	19	20	0,3	16,3	**IR15×19×20-XL**	0	–12
	20	13	0,3	13,5	**IR15×20×13-XL**	0	–12
	20	23	0,3	24,4	**IR15×20×23-XL**	0	–12

medias *https://www.schaeffler.de/std/1F9A*

Main dimensions				Mass	Designation ➤961 | 3.5 ➤962 | 3.6 X-life ➤959	Deviations for raceway F	
d	F	B	r min.	m ≈ g		upper µm	lower µm
17	20	16	0,3	10,6	**IR17×20×16-XL**	0	–12
	20	16,5	0,3	11,1	**IR17×20×16,5-XL**	0	–12
	20	20	0,3	13,5	**IR17×20×20-XL**	0	–12
	20	20,5	0,3	13,8	**IR17×20×20,5-XL**	0	–12
	20	30,5	0,3	20,6	**IR17×20×30,5-XL**	0	–12
	21	16	0,3	15	**IR17×21×16-XL**	0	–12
	21	20	0,3	18	**IR17×21×20-XL**	0	–12
	22	13	0,3	14,9	**IR17×22×13-XL**	0	–12
	22	16	0,3	18,4	**IR17×22×16-XL**	0	–12
	22	23	0,3	27,1	**IR17×22×23-XL**	0	–12
	24	20	0,6	33,8	**IR17×24×20-XL**	0	–12
20	24	16	0,3	15	**IR20×24×16-XL**	0	–12
	24	20	0,3	21,3	**IR20×24×20-XL**	0	–12
	25	17	0,3	25	**IR20×25×17-XL**	0	–12
	25	20	0,3	27,5	**IR20×25×20-XL**	0	–12
	25	20,5	0,3	27,4	**IR20×25×20,5-XL**	0	–12
	25	26,5	0,3	38	**IR20×25×26,5-XL**	0	–12
	25	30	0,3	40,4	**IR20×25×30-XL**	0	–12
	25	38,5	0,3	52,5	**IR20×25×38,5-XL**	0	–12
	28	20	0,6	45,2	**IR20×28×20-XL**	0	–12
22	26	16	0,3	18,2	**IR22×26×16-XL**	0	–12
	28	17	0,3	29,5	**IR22×28×17-XL**	0	–12
	26	20	0,3	23	**IR22×26×20-XL**	0	–12
	28	20	0,3	35	**IR22×28×20-XL**	0	–12
	28	20,5	0,3	36	**IR22×28×20,5-XL**	0	–12
	28	30	0,3	54,4	**IR22×28×30-XL**	0	–12
25	29	20	0,3	25,9	**IR25×29×20-XL**	0	–12
	29	30	0,3	39,3	**IR25×29×30-XL**	0	–12
	30	17	0,3	27,4	**IR25×30×17-XL**	0	–12
	30	20	0,3	32,8	**IR25×30×20-XL**	0	–12
	30	20,5	0,3	33,4	**IR25×30×20,5-XL**	0	–12
	30	26,5	0,3	46	**IR25×30×26,5-XL**	0	–12
	30	30	0,3	53	**IR25×30×30-XL**	0	–12
	30	32	0,3	56	**IR25×30×32-XL**	0	–12
	30	38,5	0,3	64,5	**IR25×30×38,5-XL**	0	–12
	32	22	0,6	52,5	**IR25×32×22-XL**	+5	–4

medias *https://www.schaeffler.de/std/1F9A*



Inner rings

Without lubrication hole

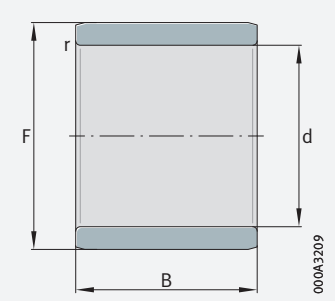

IR

d = 28 – 70 mm

Main dimensions				Mass	Designation ➤961|3.5 ➤962|3.6 X-life ➤959	Deviations for raceway F	
d	F	B	r	m		upper	lower
			min.	≈ g		µm	µm
28	32	17	0,3	24,5	**IR28×32×17-XL**	+5	−4
	32	20	0,3	28,5	**IR28×32×20-XL**	+5	−4
	32	30	0,3	43,5	**IR28×32×30-XL**	+5	−4
30	35	13	0,3	25	**IR30×35×13-XL**	+5	−4
	35	16	0,3	34	**IR30×35×16-XL**	+5	−4
	35	17	0,3	36	**IR30×35×17-XL**	+5	−4
	35	20	0,3	39	**IR30×35×20-XL**	+5	−4
	35	20,5	0,3	39,7	**IR30×35×20,5-XL**	+5	−4
	35	26	0,3	50,4	**IR30×35×26-XL**	+5	−4
	35	30	0,3	58,5	**IR30×35×30-XL**	+5	−4
	37	18	0,6	50	**IR30×37×18-XL**	+5	−4
	37	22	0,6	61,6	**IR30×37×22-XL**	+5	−4
32	37	20	0,3	42	**IR32×37×20-XL**	0	−9
	37	30	0,3	62	**IR32×37×30-XL**	0	−9
	40	20	0,6	68	**IR32×40×20-XL**	0	−9
	40	36	0,6	124	**IR32×40×36-XL**	0	−9
33	37	13	0,3	21,9	**IR33×37×13-XL**	0	−9
35	40	17	0,3	37,8	**IR35×40×17-XL**	0	−9
	40	20	0,3	44,2	**IR35×40×20-XL**	0	−9
	40	20,5	0,3	46,1	**IR35×40×20,5-XL**	0	−9
	40	30	0,3	67,1	**IR35×40×30-XL**	0	−9
	42	36	0,6	117,2	**IR35×42×36-XL**	0	−9
	43	22	0,6	82	**IR35×43×22-XL**	0	−9
38	43	20	0,3	48,1	**IR38×43×20-XL**	0	−9
	43	30	0,3	73,6	**IR38×43×30-XL**	0	−9
40	45	17	0,3	42,5	**IR40×45×17-XL**	0	−9
	45	20	0,3	50,8	**IR40×45×20-XL**	0	−9
	45	20,5	0,3	51,8	**IR40×45×20,5-XL**	0	−9
	45	30	0,3	84	**IR40×45×30-XL**	0	−9
	48	22	0,6	91,6	**IR40×48×22-XL**	0	−9
	48	40	0,6	170	**IR40×48×40-XL**	0	−9
	50	22	1	118	**IR40×50×22-XL**	0	−9
42	47	20	0,3	52,8	**IR42×47×20-XL**	−5	−19
	47	30	0,3	81	**IR42×47×30-XL**	−5	−19

medias *https://www.schaeffler.de/std/1F9A*

Main dimensions				Mass	Designation ➤961|3.5 ➤962|3.6 X-life ➤959	Deviations for raceway F	
d	F	B	r min.	m ≈ g		upper µm	lower µm
45	50	25	0,6	70,8	**IR45×50×25-XL**	–5	–19
	50	25,5	0,3	75,1	**IR45×50×25,5-XL**	–5	–19
	50	35	0,6	101	**IR45×50×35-XL**	–5	–19
	52	22	0,6	89	**IR45×52×22-XL**	0	–11
	52	40	0,6	164	**IR45×52×40-XL**	0	–11
	55	22	1	129	**IR45×55×22-XL**	0	–11
50	55	25	0,6	78	**IR50×55×25-XL**	0	–11
	55	35	0,6	112	**IR50×55×35-XL**	0	–11
	58	22	0,6	115	**IR50×58×22-XL**	0	–11
	58	40	0,6	208	**IR50×58×40-XL**	0	–11
	60	25	1	162	**IR50×60×25-XL**	0	–11
	60	28	1,1	181	**IR50×60×28-XL**	0	–11
55	60	25	0,6	85,5	**IR55×60×25-XL**	–10	–21
	60	35	0,6	121	**IR55×60×35-XL**	–10	–21
	63	25	1	141	**IR55×63×25-XL**	–10	–21
	63	45	1	256	**IR55×63×45-XL**	–10	–21
	65	28	1,1	198	**IR55×65×28-XL**	–10	–21
60	68	25	1	152	**IR60×68×25-XL**	–10	–21
	68	35	0,6	213	**IR60×68×35-XL**	–10	–21
	68	45	1	276	**IR60×68×45-XL**	–10	–21
	70	25	1	195	**IR60×70×25-XL**	–10	–21
	70	28	1,1	215	**IR60×70×28-XL**	–10	–21
65	72	25	1	141	**IR65×72×25-XL**	–10	–21
	72	45	1	259	**IR65×72×45-XL**	–10	–21
	73	25	1	164	**IR65×73×25-XL**	–10	–21
	73	35	1	231	**IR65×73×35-XL**	–10	–21
	75	28	1,1	229	**IR65×75×28-XL**	–10	–21
70	80	25	1	221	**IR70×80×25-XL**	–10	–26
	80	30	1	267	**IR70×80×30-XL**	–10	–26
	80	35	1	312	**IR70×80×35-XL**	–10	–26
	80	54	1	488	**IR70×80×54-XL**	–10	–26

medias *https://www.schaeffler.de/std/1F9A*

Inner rings

Without lubrication hole

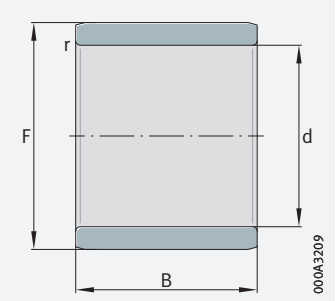

IR

d = 75 – 95 mm

Main dimensions				Mass	Designation ➤961|3.5 ➤962|3.6 X-life ➤959	Deviations for raceway F	
d	F	B	r	m		upper	lower
			min.	≈ g		µm	µm
75	85	25	1	238	**IR75×85×25-XL**	–4	–17
	85	30	1	287	**IR75×85×30-XL**	–4	–17
	85	35	1	336	**IR75×85×35-XL**	–4	–17
	85	54	1	520	**IR75×85×54-XL**	–4	–17
80	90	25	1	253	**IR80×90×25-XL**	–4	–17
	90	30	1	304	**IR80×90×30-XL**	–4	–17
	90	35	1	355	**IR80×90×35-XL**	–4	–17
	90	54	1	556	**IR80×90×54-XL**	–4	–17
85	95	26	1	277	**IR85×95×26-XL**	–14	–27
	95	36	1	388	**IR85×95×36-XL**	–14	–27
	100	35	1,1	582	**IR85×100×35-XL**	–14	–27
	100	63	1,1	1 054	**IR85×100×63-XL**	–14	–27
90	100	26	1	294	**IR90×100×26-XL**	–14	–27
	100	30	1	340	**IR90×100×30-XL**	–14	–27
	100	36	1	406	**IR90×100×36-XL**	–14	–27
	105	35	1,1	610	**IR90×105×35-XL**	–14	–27
	105	63	1,1	1 110	**IR90×105×63-XL**	–14	–27
95	105	26	1	313	**IR95×105×26-XL**	–14	–27
	105	36	1	431	**IR95×105×36-XL**	–14	–27
	110	35	1,1	657	**IR95×110×35-XL**	–14	–27
	110	63	1,1	1 170	**IR95×110×63-XL**	–14	–27
100	110	30	1,1	350	**IR100×110×30-XL**	–14	–27
	110	40	1,1	505	**IR100×110×40-XL**	–14	–27
	115	40	1,1	797	**IR100×115×40-XL**	–14	–27
110	120	30	1	409	**IR110×120×30-XL**	–14	–32
	125	40	1,1	840	**IR110×125×40-XL**	–7	–22
120	130	30	1	442	**IR120×130×30-XL**	–7	–22
	135	45	1,1	1 044	**IR120×135×45-XL**	–7	–22
130	145	35	1,1	855	**IR130×145×35-XL**	–17	–37
	150	50	1,5	1 690	**IR130×150×50-XL**	–17	–37
140	155	35	1,1	917	**IR140×155×35-XL**	–17	–37
	160	50	1,5	1 800	**IR140×160×50-XL**	–17	–37

medias *https://www.schaeffler.de/std/1F9A*

Main dimensions				Mass	Designation ➤961 | 3.5 ➤962 | 3.6 X-life ➤959	Deviations for raceway F	
d	F	B	r min.	m ≈ g		upper µm	lower µm
150	165	40	1,1	1 122	**IR150×165×40-XL**	–27	–52
160	175	40	1,1	1 200	**IR160×175×40-XL**	–27	–52
170	185	45	1,1	1 441	**IR170×185×45-XL**	–25	–46
180	195	45	1,1	1 510	**IR180×195×45-XL**	–25	–46
190	210	50	1,5	2 410	**IR190×210×50-XL**	–40	–66
200	220	50	1,5	2 518	**IR200×220×50-XL**	–40	–66
220	240	50	1,5	2 753	**IR220×240×50-XL**	–55	–86
240	265	60	2	4 600	**IR240×265×60-XL**	–55	–86
260	285	60	2	4 980	**IR260×285×60-XL**	–69	–107
280	305	69	2	6 100	**IR280×305×69-XL**	–69	–107
300	330	80	2,1	9 200	**IR300×330×80-XL**	–69	–107
320	350	80	2,1	9 800	**IR320×350×80-XL**	–83	–127
340	370	80	2,1	10 200	**IR340×370×80-XL**	–83	–127
360	390	80	2,1	10 900	**IR360×390×80-XL**	–128	–182
380	415	100	2,1	16 700	**IR380×415×100-XL**	–122	–172

medias *https://www.schaeffler.de/std/1F9A*

Inner rings

With lubrication hole

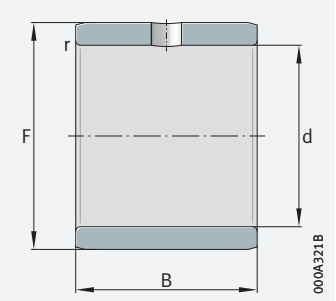

IR..-IS1

d = 6 – 50 mm

Main dimensions				Mass	Designation ➤*961*|*3.5* ➤*962*|*3.6* X-life ➤*959*	Deviations for raceway F	
d	F	B	r min.	m ≈ g		upper µm	lower µm
6	10	10	0,3	3,7	**IR6×10×10-IS1-XL**	–7	–23
8	12	10	0,3	4,8	**IR8×12×10-IS1-XL**	–4	–18
10	14	12	0,3	7,3	**IR10×14×12-IS1-XL**	–4	–18
12	16	12	0,3	7,9	**IR12×16×12-IS1-XL**	–4	–18
15	20	12	0,3	12,2	**IR15×20×12-IS1-XL**	0	–12
20	25	16	0,3	24	**IR20×25×16-IS1-XL**	0	–12
25	30	16	0,3	25,7	**IR25×30×16-IS1-XL**	0	–12
30	38	20	0,6	77	**IR30×38×20-IS1-XL**	+5	–4
35	42	20	0,6	63,9	**IR35×42×20-IS1-XL**	0	–9
40	50	20	1	106	**IR40×50×20-IS1-XL**	0	–9
45	55	20	1	117	**IR45×55×20-IS1-XL**	0	–11
50	55	20	0,6	62,5	**IR50×55×20-IS1-XL**	0	–11
	60	20	1	128	**IR50×60×20-IS1-XL**	0	–11

medias *https://www.schaeffler.de/std/1F9A*



Drawn cup roller clutches



1 Drawn cup roller clutches 974

1.1 Product design 974
1.2 Load carrying capacity 976
1.3 Compensation of angular misalignments 978
1.4 Lubrication 978
1.5 Sealing 978
1.6 Speeds 979
1.7 Noise 979

1.8 Temperature range *979*
1.9 Cages *979*
1.10 Internal clearance *979*
1.11 Dimensions, tolerances *980*
1.12 Suffixes *980*
1.13 Structure of the product designation *980*
1.14 Dimensioning *980*
1.15 Design of the adjacent construction *981*
1.16 Mounting and dismounting *985*
1.17 Legal notice regarding data freshness *986*
Product tables *987*
Drawn cup roller clutches without bearing arrangement *987*
Drawn cup roller clutches with bearing arrangement *988*

1 Drawn cup roller clutches

Drawn cup roller clutches:
- are one-way clutches, which transmit torques in one direction ➤974|🗀1
- are available with or without an integrated bearing arrangement ➤975|🗀2, ➤976|🗀3 and ➤976|🗀4
- give very precise indexing
- allow high indexing frequencies
- have a low overrunning frictional torque
- are available with or without greasing
- are particularly compact in a radial direction and therefore permit extremely compact designs
- are suitable for housing materials made from steel, light metal or plastic
- can be combined with drawn cup needle roller bearings with open ends HK and drawn cup needle roller bearings with closed end BK
- have an extensive range of applications, for example as indexing clutches, back-stopping clutches and overrunning clutches ➤974|🗀1

🗀**1**
Drawn cup roller clutches in tandem arrangement in an indexing system

① *Stationary component*
② *Component performs a swivel motion*
③ *Component performs a gradual rotational motion*

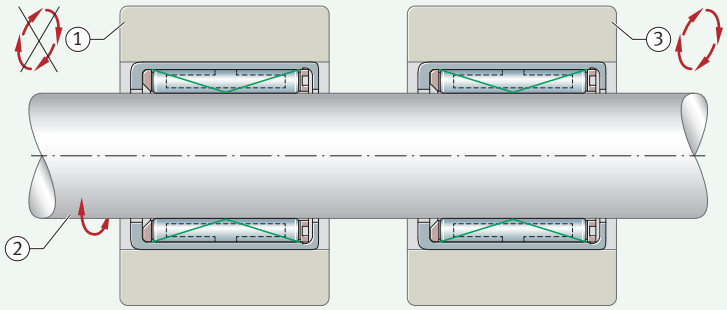

1.1 Product design

✎ *Design variants*

Drawn cup roller clutches are available:
- without bearing arrangement ➤975|🗀2
- with bearing arrangement (rolling or plain bearing) ➤976|🗀3 and ➤976|🗀4

Drawn cup roller clutches

✎ *Drawn cup roller clutches are one-way clutches*

These drawn cup roller clutches comprise thin-walled, drawn outer cups with a series of ramps on the inside diameter, plastic cages and needle rollers, which serve as clamping elements. Steel or plastic springs hold the needle rollers in their clamped position. Drawn cup roller clutches can transmit high torques in one direction and are particularly compact in a radial direction. The roller clutches are available with and without support bearing arrangements.

✎ *Suitable for applications with high indexing frequencies*

Drawn cup roller clutches give very precise indexing, since the individual spring loading of the needle rollers ensures continuous contact between the shaft, needle rollers and ramps. They allow high indexing frequencies due to their low mass and the resulting low moment of inertia of the clamping elements. They also have a low overrunning frictional torque.

✎ *Preferred areas of application*

Drawn cup roller clutches can be used in various applications such as indexing clutches, back-stopping clutches and overrunning clutches. In these cases, the drawn cup roller clutch performs an overrunning or locking function.

Drawn cup roller clutches should not be used if a malfunction could lead to personal injury. New applications, especially those involving extreme conditions, should first be verified by tests. Correct functioning can only be guaranteed if the concentricity error between the support bearing and the shaft can be kept to a low value.

Drawn cup roller clutches without bearing arrangement

✎ *Suitable for supporting torques only*

Roller clutches HF do not have a bearing arrangement, i. e. they transmit torques only and, as a result, are unable to support any radial forces ➤*975*|*2*. In the case of these roller clutches, concentricity to the shaft axis must be secured by additional rolling bearings or drawn cup roller clutches with a bearing arrangement must be used. The drawn cup roller clutches are available with and without knurling.

✎ *Drawn cup roller clutches without knurling*

Drawn cup roller clutches without knurling are available with steel or plastic pressure springs ➤*975*|*2*. Bearings with plastic springs have the suffix KF ➤*980*|*1.12*.

✎ *Drawn cup roller clutches with knurling*

For improved torque transmission in plastic housings, drawn cup roller clutches are available with a knurled outside surface. These drawn cup roller clutches have the suffix R ➤*980*|*1.12*. The knurling can be applied to part of the drawn cup or over its entire length. The drawn cup roller clutches are also available with steel or plastic pressure springs. Roller clutches with plastic springs have the suffix KF ➤*980*|*1.12*.

2

Drawn cup roller clutches without bearing arrangement, with and without knurling

① *Without knurling*
② *With knurling*

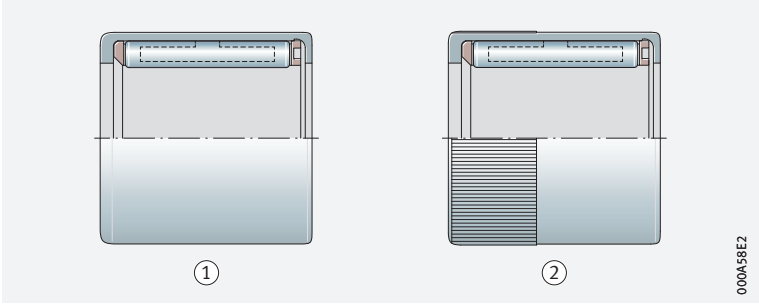

Drawn cup roller clutches with bearing arrangement

✎ *Also suitable for supporting radial forces*

Due to the integrated plain or rolling bearing, roller clutches HFL can also support radial forces in addition to torques ➤*976*|*3* and ➤*976*|*4*. The drawn cup roller clutches are available with and without knurling.

✎ *Drawn cup roller clutches without knurling*

Drawn cup roller clutches without knurling are available with steel or plastic pressure springs ➤*976*|*3* and ➤*976*|*4*. Drawn cup roller clutches with plastic springs have the suffix KF ➤*980*|*1.12*.

✎ *Drawn cup roller clutches with knurling*

For improved torque transmission in plastic housings, drawn cup roller clutches are available with a knurled outside surface. These drawn cup roller clutches have the suffix R ➤*980*|*1.12*. The knurling can be applied to part of the drawn cup or over its entire length. These drawn cup roller clutches are also available with steel or plastic pressure springs. Roller clutches with plastic springs have the suffix KF ➤*980*|*1.12*.

3
Drawn cup roller clutches with plain bearing arrangement, with and without knurling

F_r = *radial load*

① *Without knurling*
② *With knurling*
③ *Plain bearing*

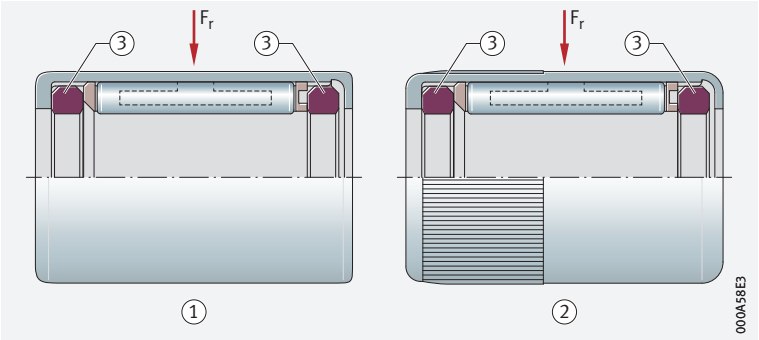

4
Drawn cup roller clutch with rolling bearing arrangement, without knurling

F_r = *radial load*

① *Rolling bearing*

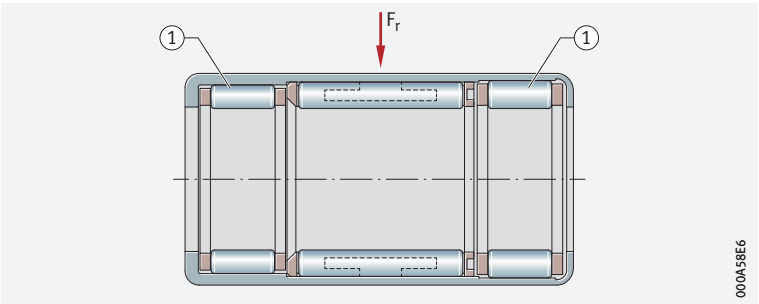

Clamping direction of the drawn cup roller clutch
An arrow on the end face of the drawn cup indicates the clamping direction of the drawn cup roller clutch. The roller clutch clamps when the drawn cup is rotated in the direction of the arrow.

1.2 Load carrying capacity

Roller clutches with a support bearing arrangement accommodate radial forces

Depending on the design (with or without bearing arrangement), drawn cup roller clutches can either transmit torques only or additional radial loads ➤*974*|*1.1*, ➤*976*|*3* and ➤*976*|*4*.
For roller clutches without bearing arrangement, radial forces must be supported by additional bearings.

Transmissible torque

The rigidity of the housing determines the transmissible torque

Transmission of torque requires a rigid housing. The transmissible torque is therefore dependent on the shaft and housing material, the shaft hardness, the wall thickness of the housing and the shaft and housing tolerances. When calculating the torque, the maximum drive torque and the moment of inertia of the masses during acceleration must be taken into consideration.

Limiting load

Do not exceed the limiting load

In the case of drawn cup roller clutches with plain bearings, the product calculated from the actual speed n and radial load F_R must not exceed the value stated for the limiting load $(F_r \cdot n)_{max}$. The operating limits are determined by the limiting speeds stated in the product tables and the permissible radial load.

Indexing accuracy and indexing frequency

The roller clutch must not be overloaded

In order not to overload the clutch, the inertia of the entire system must be taken into consideration. The high indexing accuracy is due to the individual spring loading of the needle rollers, which ensures continuous contact between the shaft, needle rollers and clamping surface.
The indexing accuracy is influenced by the indexing frequency, lubrication, fitting tolerances, adjacent construction, elastic deformation of the adjacent parts and the drive method, either through the shaft or the housing. Optimum accuracy is achieved if the drive is via the shaft.

High indexing frequencies due to low mass

High indexing frequencies are due to the low mass and the resulting low moment of inertia of the clamping elements.

Frictional torque and frictional energy

For pattern of frictional torque ➤977| 5. The overrunning frictional energy at idle is dependent on whether the shaft or the outer ring is rotating ➤977| 6.

5
Overrunning frictional torque, as a function of shaft diameter

M_R = *overrunning frictional torque*
d = *shaft diameter*

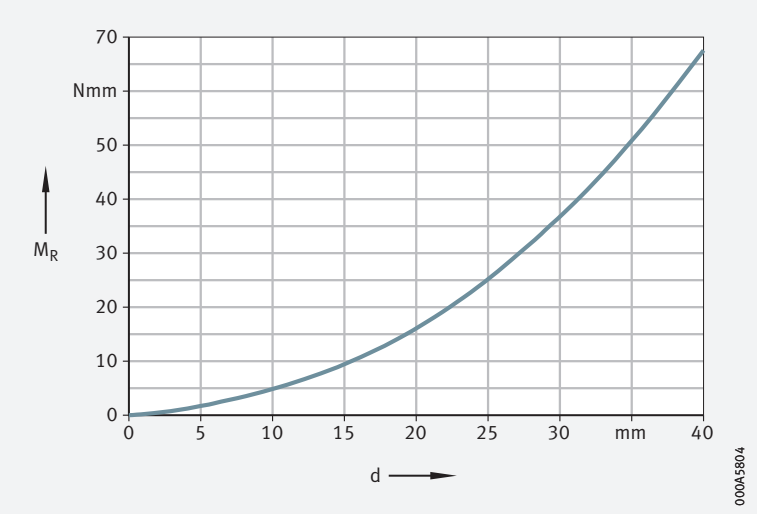

6
Overrunning frictional energy, as a function of speed

N_R = *overrunning frictional energy*
n = *speed*
n_{GA} = *limiting speed with rotating outer ring*
n_{GW} = *limiting speed with rotating shaft*

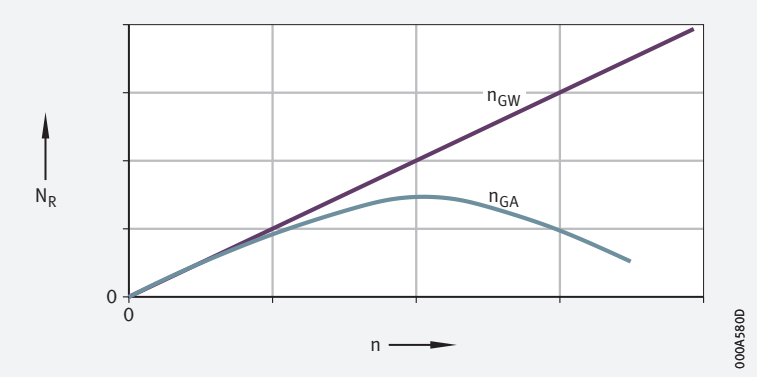

Rotating outer ring

Due to the centrifugal force, the needle rollers may lift off the shaft

If the outer ring rotates, the frictional energy increases with speed at first but then, due to the centrifugal force of the needle rollers, it decreases gradually towards zero. At this speed, there is no longer any frictional contact between the needle rollers and the shaft. Due to the increasing centrifugal force, the needle rollers lift off the shaft.

1.3 Compensation of angular misalignments

Concentricity is an essential precondition for correct functioning of the roller clutch. Correct functioning can only be guaranteed if the concentricity error between the support bearing and the shaft can be kept to a low value.

1.4 Lubrication

A grease to GA26 is used for initial greasing

The roller clutches are greased using a lithium soap grease to GA26. In many cases, the initial greasing is sufficient to last the operating life of the bearings. For applications with oil lubrication, roller clutches are available without greasing. These roller clutches are coated with a preservative. For general applications (mixed operation involving locking and overrunning), the Schaeffler initial greasing has proved effective. In order to ensure optimum function, it may be necessary to use different lubricants. The suitability of the lubricant must then be verified by means of tests.

For applications in which one operating condition (overrunning or locking) is heavily predominant, a special greasing should be used. In this case, please consult Schaeffler.

A grease operating life cannot be calculated

It is not possible to calculate the grease operating life or lubrication interval for drawn cup roller clutches. If relubrication is carried out, oil should used for lubrication or a changeover to oil lubrication should generally be made. At temperatures < -10 °C and speeds $> 0{,}7\ n_G$, recommendations on lubrication should be requested. At temperatures over +70 °C, oil lubrication should be used. The oil level should be such that, when the drawn cup roller clutch is stationary and the axis is horizontal, it is immersed approx. $^1/_3$ in the oil bath.

Suitable lubricating oils

Suitable oils are CL and CLP to DIN 51517 or HL and HLP to DIN 51524. Viscosity classes ➤*978*|▦ *1*.

Compatibility with plastic cages

When using bearings with plastic cages, compatibility between the lubricant and the cage material must be ensured if synthetic oils, lubricating greases with a synthetic oil base or lubricants containing a high proportion of EP additives are used.

▦ **1**
Viscosity classes

Operating temperature °C		Viscosity class
from	to	
+15	+30	ISO VG 10
+15	+90	ISO VG 32
+60	+120	ISO VG 100

1.5 Sealing

Drawn cup roller clutches (with and without bearing arrangement) are supplied without seals. Contaminants (dust, dirt and moisture) can impair the function and operating life of roller clutches.

Sealing of the bearing position with sealing rings G or SD

Effective sealing elements for use in sealing open drawn cup roller clutches with a risk of contamination

If there is a risk of contamination, sealing rings of economical series G or SD should be fitted ➤*992*. The sealing rings are designed as contact seals and are arranged in front of the roller clutch. They protect the bearing position reliably against contamination, spray water and excessive loss of grease. The sealing rings are matched to the small radial dimensions of the drawn cup roller clutches and can be combined with wider inner rings of series IR. They are very easy to fit, since they are simply pressed into the housing bore.

1.6 Speeds

✎ *Speeds in the product tables*

The limiting speeds n_{GW} and n_{GA} in the product tables are valid for oil and grease lubrication. The limiting speed n_{GW} is valid for a rotating shaft, while n_{GA} is valid for a rotating outer ring.

1.7 Noise

Schaeffler Noise Index

The Schaeffler Noise Index (SGI) is not yet available for this bearing type ➤*69*. The data for these bearing series will be introduced and updated in stages.

Further information:

- ***medias*** *https://medias.schaeffler.com*

1.8 Temperature range

Possible operating temperatures of drawn cup roller clutches ➤*979*| ▦ *2*.

▦ **2**
Permissible temperature ranges

Operating temperature	Drawn cup roller clutches
	–10 °C to +70 °C, limited by the lubricant

In the event of anticipated temperatures which lie outside the stated values, please contact Schaeffler.

1.9 Cages

Plastic cages are used in the guidance of rolling elements for roller clutches and for integrated support bearing arrangements supported by rolling elements.

1.10 Internal clearance

✎ *The enveloping circle diameter F_w applies instead of the radial internal clearance*

In the case of bearings without inner ring, the dimension for the enveloping circle diameter F_w is used instead of the radial internal clearance. The enveloping circle is the inner inscribed circle of the needle rollers in clearance-free contact with the outer raceway. In drawn cup roller clutches with a rolling bearing arrangement, the enveloping circle diameter F_w of the bearings once fitted (in the solid section ring gauge) is approximately in tolerance class F8. Upper and lower deviations of enveloping circle diameter for tolerance class F8 ➤*979*| ▦ *3*.

▦ **3**
Deviations of enveloping circle diameter for drawn cup roller clutches supported by rolling bearings

Enveloping circle diameter F_w mm		Tolerance class F8 Tolerance for enveloping circle diameter F_w	
		upper deviation	lower deviation
over	incl.	µm	µm
3	6	+28	+10
6	10	+35	+13
10	18	+43	+16
18	30	+53	+20
30	50	+64	+25

1.11 Dimensions, tolerances

Dimensions and tolerances of drawn cup roller clutches are not standardised. The thin-walled outer cups adopt the dimensional and geometrical accuracy of the housing bore.

1.12 Suffixes

Suffixes describe the design and features of a bearing in more detail.

4 Suffixes and corresponding descriptions

Suffix	Description of suffix	
–	Steel springs	Standard
KF	Plastic pressure springs	
R	Knurled outside surface	
RR	Drawn cup roller clutch with Corrotect coating	Special design, available by agreement

1.13 Structure of the product designation

With ***medias*** interchange, equivalent Schaeffler bearing designations can be determined for bearing designations from other rolling bearing manufacturers *https://www.schaeffler.de/std/1B69*.

Examples of composition of product designation

The designation of drawn cup roller clutches follows a set model. Examples ➤*980*|*7* and ➤*980*|*8*.

7 Drawn cup roller clutch without bearing arrangement, without knurling: designation structure

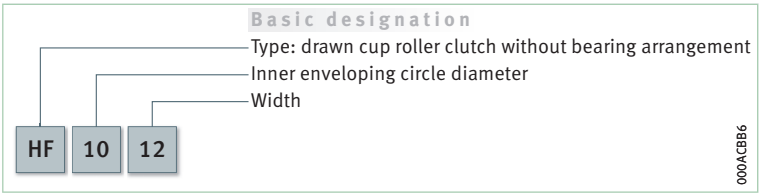

8 Drawn cup roller clutch with bearing arrangement, plastic pressure springs, with knurling: designation structure

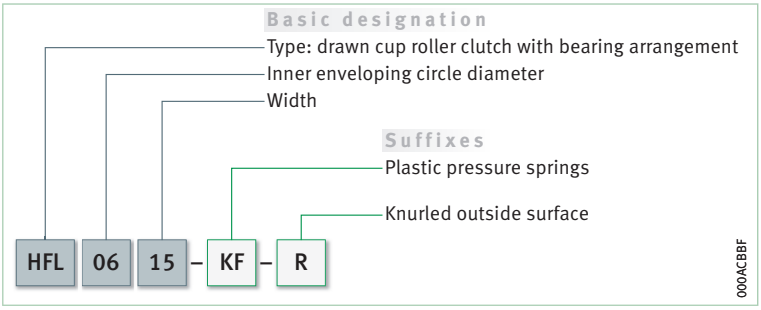

1.14 Dimensioning

The size is determined on the basis of the load carrying capacity of the drawn cup roller clutch relative to the loads and the requirements for rating life and operational reliability ➤*981*|*1.15*.

1.15 Design of the adjacent construction

Design of housing bore

✎ *Support outer cup over entire circumference and width*

Suitable housing materials are steel, light metal or plastic. In order to allow full utilisation of the performance capability of drawn cup roller clutches and achieve the requisite rating life, sufficient rigid support must be provided for the outer cups in the housing. The support for the outer cup in the housing bore can be produced as a cylindrical seating surface. The seating surfaces for the outer cup and the raceway for the rolling elements or inner ring (if the bearing arrangement is not produced as a direct bearing arrangement) should not be interrupted by grooves, holes or other recesses. The accuracy of the mating parts must meet specific requirements, the bore tolerances for the housing bore (recommended tolerance classes) are dependent on the housing material ➤*981*|▦ *5* and ➤*982*|▦ *6*. The surface quality of the housing bore should be Ramax 0,8. The cylindricity tolerance of the housing bore in metal housings should be within the tolerance grade IT5/2.

Due to the thin-walled outside surface, the roller clutches only adopt their precise geometry once they have a tight fit. As a result, the accuracy of the locating bore essentially determines the geometrical accuracy of the drawn cup and thus the functioning of the clutch.

✎ *Provide lead chamfer on the housing bore*

For the drawn cup roller clutches to be mounted without damage, the housing bore must have a lead chamfer of 15°.

▦ **5**
Design of housing bore

Series	Springs	Bore Housing material		
		Steel Cast iron	Light metal	Max. bore in plastic[2]
HF, HFL	Steel	N6 Ⓔ (N7 Ⓔ)[1]	R6 Ⓔ (R7 Ⓔ)[1]	–
HF..-KF, HFL..-KF	Plastic	N7 Ⓔ	R7 Ⓔ	–
HF..-R, HFL..-R	Steel	–	–	0 D –0,05
HF..-KF-R, HFL..-KF-R	Plastic	–	–	0 D –0,05
HFL0606-KF-R, HFL0806-KF-R	Plastic	–	–	0 D –0,05

1) *The values in brackets can be used if the actual torque is no more than 50% of the permissible torque $M_{d\ per}$ in accordance with the product table.*

2) *Guide values as a function of the plastic used. Outside diameter D* ➤*987*|▦.

Minimum wall thickness for metal housings

Maximum transmissible torque

For metal housings, the maximum transmissible torque $M_{d\ per\ max}$ is determined as a function of the diameter ratio Q_A to ➤*982*|*9* (steel housing) or to ➤*983*|*10* (aluminium housing), see calculation examples.

Guide values for $Q_{A\ max}$ with steel and aluminium as housing materials ➤*982*|*6*.

6
Guide values

Housing material	Diameter ratio $Q_{A\ max}$
Steel	0,8
Aluminium	0,6

The comparative stress σ_v must not exceed the yield stress of the housing material.

Steel housing

Calculation example

For drawn cup roller clutches HF0612, the maximum transmissible torque $M_{d\ per\ max}$ should be determined ➤*982*|*9*:

Drawn cup roller clutch	HF0612
Housing	Steel
Housing bore tolerance	N6 Ⓔ ➤*981*|*5*
Permissible housing stress ($R_{p0,2}$) σ_v	450 N/mm²
Diameter ratio Q_A of housing	0,9
Permissible torque $M_{d\ per}$	in accordance with product table

Calculation

$$M_{d\ per\ max} = 60\%\ M_{d\ per}$$
$$= 0{,}6 \cdot 1{,}76\ Nm$$
$$= 1{,}056\ Nm$$

9
Steel housing

Modulus of elasticity
E = 210 000 N/mm²

Q_A = *diameter ratio of housing*
D_{Ai} = *housing bore*
D_{Aa} = *housing outside diameter*
$M_{d\ per}$ = *permissible torque*
$M_{d\ per\ max}$ = *maximum transmissible torque*
σ_v = *comparative stress*

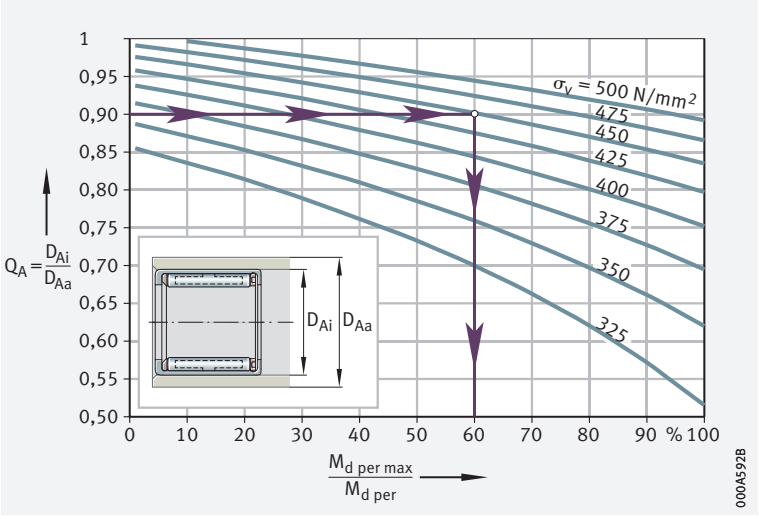

Aluminium housing

Calculation example

For drawn cup roller clutch HF1616, the diameter ratio Q_A of the housing should be determined ➤*983*|*10*:

Drawn cup roller clutch	HF1616
Housing	Aluminium
Housing bore tolerance	R6 Ⓔ ➤*981*|*5*
Permissible housing stress ($R_{p0,2}$) σ_v	250 N/mm²
Maximum transmissible torque $M_{d\ per\ max}$	10 Nm
Permissible torque $M_{d\ per}$	in accordance with product table
giving $M_{d\ per\ max}/M_{d\ per}$	50%

Calculation

$Q_A = D_{Ai}/D_{Aa} \leqq 0{,}7$

$D_{Aa} \geqq D_{Ai}/0{,}7 = 22\ mm/0{,}7$

$= 31{,}5\ mm$

10
Aluminium housing

Modulus of elasticity
E = 70 000 N/mm²

Q_A = *diameter ratio of housing*
D_{Ai} = *housing bore*
D_{Aa} = *housing outside diameter*
$M_{d\ per}$ = *permissible torque*
$M_{d\ per\ max}$ = *maximum transmissible torque*
σ_v = *comparative stress*

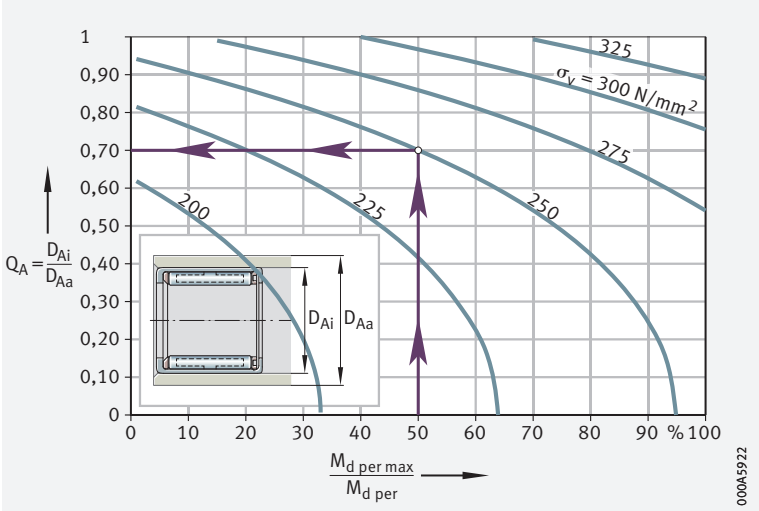

Minimum wall thickness for plastic housings

For plastic housings, drawn cup roller clutches with a partially or fully knurled outside surface should be used (suffix R).

The guide value for the minimum wall thickness of plastic housings is:

f 1

$$s_{min} \geqq D - F_w$$

Legend

s_{min}	mm	Minimum wall thickness
D	mm	Outside diameter of roller clutch
F_w	mm	Enveloping circle.

Axial location

A tight fit is usually sufficient for axial location

Drawn cup roller clutches give very easy mounting and permit simple adjacent constructions. The drawn cup roller clutches are pressed into the housing bore and require no further axial location.
The precondition for this is, however, that the specifications in accordance with ➤*981*|▦ *5* are observed.

Design of the shaft/raceway

Produce the raceway as a rolling bearing raceway

Drawn cup roller clutches HF/HFL are usually used without an inner ring. In order to guarantee correct functioning of the drawn cup roller clutches, the raceway for the rolling elements on the shaft must be produced as a rolling bearing raceway (hardened and ground). The surface hardness of the raceways must be 670 HV to 840 HV, the case hardening depth CHD must be sufficiently large (CHD ≧ 0,3 mm). Design of raceways ➤*984*|▦ *7*. If the shaft cannot be produced as a raceway, the bearings can be combined with inner rings IR or LR.

Provide lead chamfer on the shaft

For the bearings to be mounted without damage, the shaft must have a lead chamfer of 10° to 15° with a width of approx. 1 mm.

▦ **7**
Design of shaft

Series	Springs	Shaft			
		Tolerance class[1]	Roundness tolerance max.	Parallelism tolerance max.	Recommended mean roughness value Ramax (Rzmax) µm
HF, HFL	Steel	h5 (h6)[2]	IT3	IT3	0,4 (2)
HF..-KF, HFL..-KF	Plastic	h8			
HF..-R, HFL..-R	Steel	h5 (h6)[2]			
HF..-KF-R, HFL..-KF-R	Plastic	h8			
HFL0606-KF-R, HFL0806-KF-R	Plastic	h9			

1) *The envelope requirement Ⓔ applies.*

2) *The values in brackets can be used if the actual torque is no more than 50% of the permissible torque $M_{d\,per}$.*

1.16 Mounting and dismounting

Protect drawn cup roller clutches against dust, dirt and moisture; contaminants can impair the function and operating life of roller clutches. Pressing-in forces must never be directed through the rolling elements. Drawn cup roller clutches must not be tilted during pressing-in, as this may damage the needle rollers and raceways.

Retention for transport

Drawn cup roller clutches are normally packed individually in the case of small quantities. Where larger quantities are involved, drawn cup roller clutches are placed in a specific orientation in blister packaging and delivered in this form. The blister packaging then serves to retain the parts in position during transport.

Removing the drawn cup roller clutches from the packaging

Drawn cup roller clutches should only be removed from their original packaging immediately before assembly. If roller clutches are removed from a batch packaged with dry preservative, the package must be closed again immediately. The protective vapour phase can be maintained only in the closed package. Ungreased drawn cup roller clutches are coated with a preservative. Lubrication with oil must take place after pressing-in, in accordance with the specifications.

Storage

Drawn cup roller clutches should be stored:

- in dry, clean rooms with the room temperature as constant as possible
- at a relative humidity of max. 65%

Storage period

The storage period for greased drawn cup roller clutches is limited by the shelf life of the lubricating grease.

Mounting using a fitting mandrel

Drawn cup roller clutches should only be pressed into the locating bore using a special fitting mandrel ➤*864*. Attention must be paid to the clamping direction of the roller clutch. The clamping direction is indicated by an arrow on the end face of the drawn cup.

The drawn cup roller clutch clamps if it is rotated in the direction of the arrow.

Functional inspection

Clutches without knurling

The function of these roller clutches is checked in a housing with the minimum wall thickness determined according to ➤*982*|*9* or thicker. The housing bore and shaft tolerances must be observed ➤*981*|*5* and ➤*984*|*7*.

Clutches with knurling

The function of these clutches is checked before they are pressed in. In this case, the inspection criteria are the clamping effect and idling.

For any questions relating to the mounting of drawn cup roller clutches, please consult Schaeffler.

Schaeffler Mounting Handbook

Drawn cup roller clutches must be handled with great care

In order that drawn cup roller clutches can function correctly and achieve the envisaged operating life without detrimental effect, they must be handled with care.

The Schaeffler Mounting Handbook MH 1 gives comprehensive information about the correct storage, mounting, dismounting and maintenance of rotary rolling bearings *https://www.schaeffler.de/std/1D53*. It also provides information which should be observed by the designer, in relation to the mounting, dismounting and maintenance of bearings, in the original design of the bearing position. This book is available from Schaeffler on request.

1.17 Legal notice regarding data freshness

✎ The further development of products may also result in technical changes to catalogue products

Of central interest to Schaeffler is the further development and optimisation of its products and the satisfaction of its customers. In order that you, as the customer, can keep yourself optimally informed about the progress that is being made here and with regard to the current technical status of the products, we publish any product changes which differ from the printed version in our electronic product catalogue.

§ We therefore reserve the right to make changes to the data and illustrations in this catalogue. This catalogue reflects the status at the time of printing. More recent publications released by us (as printed or digital media) will automatically precede this catalogue if they involve the same subject. Therefore, please always use our electronic product catalogue to check whether more up-to-date information or modification notices exist for your desired product.

Link to electronic product catalogue

The following link will take you to the Schaeffler electronic product catalogue: *https://medias.schaeffler.com*.

Drawn cup roller clutches

Without bearing arrangement
With or without knurling

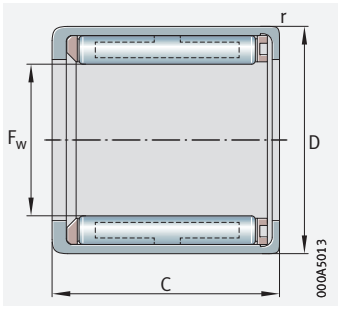

HF, HF..-KF
Without knurling

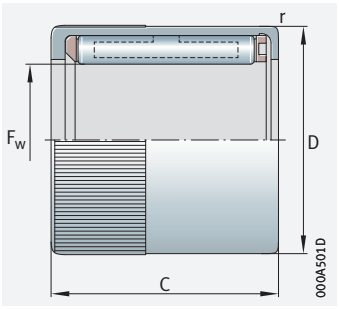

HF..-R, HF..-KF-R
With knurling

F_w = 3 – 35 mm

Main dimensions				Permissible torque	Limiting speeds		Mass	Designation ➤980|1.12 ➤980|1.13 Drawn cup roller clutch with		Suitable drawn cup needle roller bearings for radial support
F_w	D	C –0,3	r min.	$M_{d\ per}$ Nm	n_{GW}[1] min^{-1}	n_{GA}[2] min^{-1}	m ≈ g	plastic springs	steel springs	
3	6,5	6	0,3	0,18	45 000	8 000	1	**HF0306-KF**	–	HK0306-TV
	6,5	6	0,3	0,06	45 000	8 000	1	**HF0306-KF-R**	–	HK0306-TV
4	8	6	0,3	0,34	34 000	8 000	1	**HF0406-KF**	–	HK0408
	8	6	0,3	0,1	34 000	8 000	1	**HF0406-KF-R**	–	HK0408
6	10	12	0,3	1,76	23 000	13 000	3	**HF0612-KF**	**HF0612**	HK0608
	10	12	0,3	0,6	23 000	13 000	3	**HF0612-KF-R**	**HF0612-R**	HK0608
8	12	12	0,3	3,15	17 000	12 000	3,5	**HF0812-KF**	**HF0812**	HK0808
	12	12	0,3	1	17 000	12 000	3,5	**HF0812-KF-R**	**HF0812-R**	HK0808
10	14	12	0,3	5,3	14 000	11 000	4	**HF1012-KF**	**HF1012**	HK1010
12	18	16	0,3	12,2	11 000	8 000	11	–	**HF1216**	HK1212
14	20	16	0,3	17,3	9 500	8 000	13	–	**HF1416**	HK1412
16	22	16	0,3	20,5	8 500	7 500	14	–	**HF1616**	HK1612
18	24	16	0,3	24,1	7 500	7 500	16	–	**HF1816**	HK1812
20	26	16	0,3	28,5	7 000	6 500	17	–	**HF2016**	HK2010
25	32	20	0,3	66	5 500	5 500	30	–	**HF2520**	HK2512
30	37	20	0,3	90	4 500	4 500	36	–	**HF3020**	HK3012
35	42	20	0,3	121	3 900	3 900	40	–	**HF3520**	HK3512

medias *https://www.schaeffler.de/std/1F9A*

[1] Limiting speed for rotating shaft.

[2] Limiting speed for rotating outer ring.

Drawn cup roller clutches

With bearing arrangement
With or without knurling

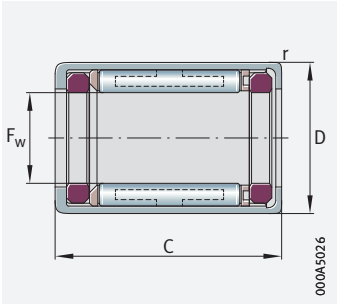

HFL, HFL..-KF, plain bearing arrangement (HFL0308-KF, HFL0408-KF, HFL0615-KF, HFL0615)

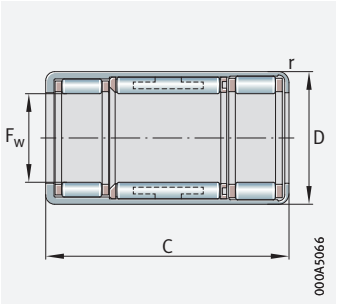

HFL, HFL..-KF, rolling bearing arrangement ($F_w \geqq 8$ mm and $C \geqq 22$ mm), HFL0822-KF-R, HFL0822-R

F_w = 3 – 35 mm

Main dimensions				Basic load ratings[1]		Fatigue limit load	Permissible torque	Limiting speeds		Mass
F_w	D	C	r	dyn. C_r	stat. C_{0r}	C_{ur}	$M_{d\ per}$	n_{GW}[3]	n_{GA}[4]	m
		–0,3	min.	N	N	N	Nm	min^{-1}	min^{-1}	≈ g
3	6,5	8	0,3	–	–	–	0,18	45 000	8 000	1,4
	6,5	8	0,3	–	–	–	0,06	45 000	8 000	1,4
4	8	8	0,3	–	–	–	0,34	34 000	8 000	1,6
	8	8	0,3	–	–	–	0,1	34 000	8 000	1,6
6	10	6	0,3	–	–	–	0,5	23 000	13 000	1
	10	15	0,3	–	–	–	1,76	23 000	13 000	4
	10	15	0,3	–	–	–	0,6	23 000	13 000	4
8	12	6	0,3	–	–	–	0,7	17 000	12 000	2
	12	22	0,3	3 650	3 950	560	3,15	17 000	12 000	7
	12	22	0,3	3 650	3 950	560	1	17 000	12 000	7
10	14	22	0,3	3 950	4 500	640	5,3	14 000	11 000	8
12	18	26	0,3	6 300	6 700	930	12,2	11 000	8 000	18
14	20	26	0,3	6 800	7 800	1 100	17,3	9 500	8 000	20
16	22	26	0,3	7 400	9 000	1 270	20,5	8 500	7 500	22
18	24	26	0,3	8 000	10 200	1 440	24,1	7 500	7 500	25
20	26	26	0,3	8 500	11 400	1 610	28,5	7 000	6 500	27
25	32	30	0,3	10 600	14 000	1 930	66	5 500	5 500	44
30	37	30	0,3	11 600	16 900	2 330	90	4 500	4 500	51
35	42	30	0,3	12 200	18 800	2 600	121	3 900	3 900	58

medias *https://www.schaeffler.de/std/1F9A*

1) Drawn cup roller clutches with rolling bearing arrangement.

2) Drawn cup roller clutches with plain bearing arrangement: during operation, the product calculated from the actual speed n and radial load F_r must not exceed the value stated for the limiting load $(F_r \cdot n)_{max}$. The operating limits are determined by the limiting speeds stated and the permissible radial load.

3) Limiting speed for rotating shaft.

4) Limiting speed for rotating outer ring.

5) No arrow on end face.

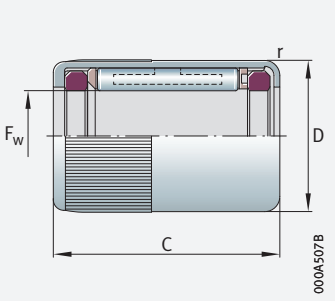

HFL0308-KF-R, HFL0408-KF-R, HFL0615-R, HFL0615-KF-R, plain bearing arrangement, with knurling

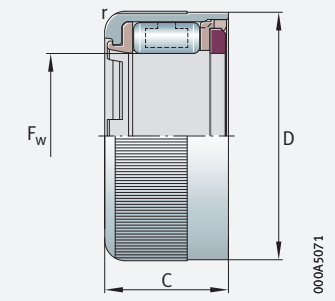

HFL0606-KF-R[5], HFL0806-KF-R[5], plain bearing arrangement, with knurling

	Designation ➤980|1.12 ➤980|1.13		Permissible radial load[2]	Limiting load $(F_r \cdot n)_{max}$[2]
F_w	Drawn cup roller clutch with		$F_{r\,max}$	
	plastic springs	steel springs	N	N/min
3	**HFL0308-KF**	–	60	16 000
	HFL0308-KF-R	–	60	16 000
4	**HFL0408-KF**	–	80	16 000
	HFL0408-KF-R	–	80	16 000
6	**HFL0606-KF-R**	–	40	4 200
	HFL0615-KF	**HFL0615**	110	18 000
	HFL0615-KF-R	**HFL0615-R**	110	18 000
8	**HFL0806-KF-R**	–	54	4 200
	HFL0822-KF	**HFL0822**	–	–
	HFL0822-KF-R	**HFL0822-R**	–	–
10	–	**HFL1022**	–	–
12	–	**HFL1226**	–	–
14	–	**HFL1426**	–	–
16	–	**HFL1626**	–	–
18	–	**HFL1826**	–	–
20	–	**HFL2026**	–	–
25	–	**HFL2530**	–	–
30	–	**HFL3030**	–	–
35	–	**HFL3530**	–	–

Sealing rings



1 Sealing rings 992

1.1 Product design 992
1.2 Lubrication 997
1.3 Temperature range 997
1.4 Suffixes 998
1.5 Structure of the product designation 998

1.6 Design of bearing arrangements ____ *998*
1.7 Mounting and dismounting ____ *999*
1.8 Legal notice regarding data freshness ____ *1001*

Product tables
Sealing rings ____ *1002*

1 Sealing rings

The sealing rings:
- are of a single lip or double lip design ➤*993*|🗀*2*, ➤*993*|🗀*3*, ➤*994*|🗀*4*
- are used as contact type sealing elements for sealing of the bearing position in the adjacent construction ➤*992*|🗀*1*
- are also suitable as wipers where purely axial motion is present
- protect the bearings against contamination, spray water and the loss of grease
- are resistant to undoped lubricants with a mineral oil base
- allow circumferential speeds at the seal lip of up to 10 m/s, depending on the surface quality of the shaft
- are matched to the radial dimensions of Schaeffler drawn cup needle roller bearings and needle roller bearings ➤*992*|🗀*1*
- are easy to fit, since they are simply pressed into the housing bore

🗀*1*
Sealing of the bearing position by a Schaeffler sealing ring

① *Single lip sealing ring G*
② *Needle roller bearing NK*
③ *Inner ring LR*

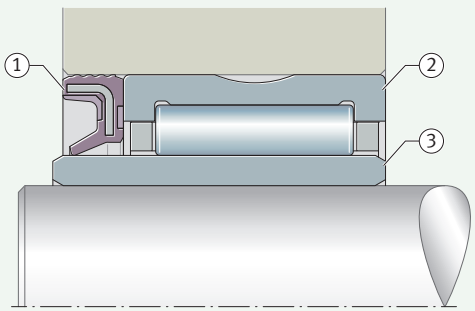

1.1 Product design

✎*Design variants*

Sealing rings are available as:
- a single lip variant (sealing ring GR and G) ➤*993*|🗀*2* and ➤*993*|🗀*3*
- a double lip design (sealing ring SD) ➤*994*|🗀*4*

✎*Sealing of the bearing position has a decisive influence on the function and operating life of a bearing*

The quality of a bearing arrangement is decisively influenced by the components – shaft, housing, seal – that are directly adjacent to the bearing. Seals play a decisive role in protecting bearings against contamination. If inadequate seals are used, contaminants can penetrate the bearing or an unacceptably large quantity of lubricant may escape from the bearing. Solid contaminants lead to wear and/or fatigue of the raceways and rolling elements. Bearings that are contaminated or running dry will fail long before they reach their fatigue rating life. In the design of bearing arrangements, the use of the correct seals is therefore decisive in determining the operating life of the bearings and the cost-effectiveness of the bearing arrangement.

✎*Schaeffler sealing rings G, GR, SD*

Schaeffler sealing rings were developed as seals for needle roller bearings and have been available in the market for decades. During this time, they have proved extremely effective in automotive and engine construction as well as machine and equipment building.

Fundamental information on sealing rings and the principles of sealing ring technology as well as examples of applications are given in Technical Product Information TPI 128. This publication can be requested from Schaeffler.

Single lip sealing rings

With external steel reinforcement or rubber encased reinforcing ring

Single lip sealing rings are available in the designs GR and G ➤*993*|*2*, ➤*993*|*3* and ➤*994*|*1*. The sealing rings comprise a high quality synthetic NBR elastomer material, which is coloured green.
Due to an active filler material, the sealing rings have particularly good resistance to wear and heat.

Sealing rings GR

Sealing rings GR suitable for shaft diameters up to 7 mm as standard and have external steel reinforcement for stiffening purposes ➤*993*|*2* and ➤*994*|*1*.

Sealing rings G

Sealing rings G are designed for shaft diameters over 8 mm and have a rubber encased steel reinforcement with a rubber wave profile for stiffening purposes ➤*993*|*3* and ➤*994*|*1*. This provides good sealing on the outside diameter. At the same time, it also reduces the forces required for fitting.

The angled reinforcing rings are made from formed sheet steel in accordance with DIN EN 10139.

2
Single lip sealing ring GR

① *Angled reinforcing ring*
② *Back surface (with marking)*
③ *Contact surface*
④ *Back face*
⑤ *End face*
⑥ *Seal edge*
⑦ *Seal lip*
⑧ *End surface*
⑨ *Outside surface*

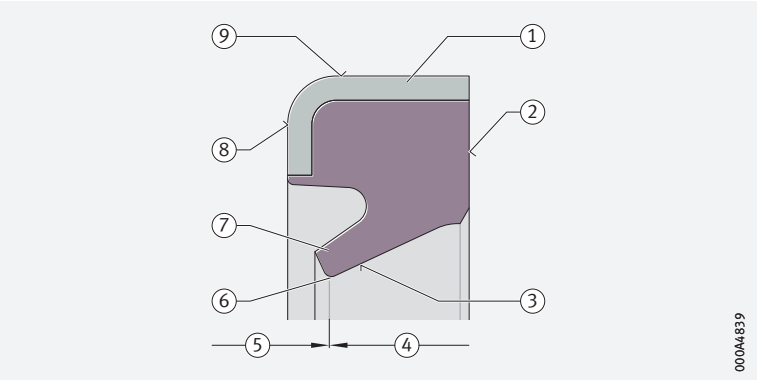

3
Single lip sealing ring G

① *Outside surface*
② *Rubber casing*
③ *Angled reinforcing ring*
④ *Back surface (with marking)*
⑤ *Contact surface*
⑥ *Back face*
⑦ *End face*
⑧ *Seal edge*
⑨ *Seal lip*
⑩ *Locating recess*
⑪ *End surface*

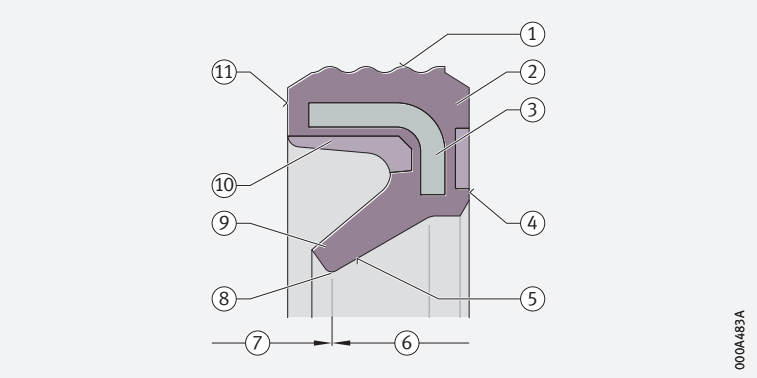

Double lip sealing rings

With contact lip and non-contact dust shield

Double lip sealing rings are available in the design SD ➤*994*|*4* and ➤*994*|*1*:

- A contact seal lip essentially prevents the escape of lubricant and unpressurised oil from the bearing arrangement.
- A protective lip in contact with the shaft (marked side) also acts as a gap seal against the ingress of contamination

The space between the seal lip and protective lip must be filled with grease.

Carrier and lip area made from different materials

The sealing rings comprise two plastic components: the carrier is made from glass fibre reinforced polyamide PA66-GF, while the seal lip area is made from thermoplastic PU elastomer (coloured green).

Also suitable as wipers on shaft with axial motion

Sealing rings SD can also be used as wipers on shafts with axial motion. Since these sealing rings are made from a harder and stiffer lip material than the sealing rings G and also have an additional protective lip, they are particularly suitable for axial motions. Stroke velocities up to 3 m/s are possible, depending on the surface quality of the shaft.

4
Double lip sealing ring SD

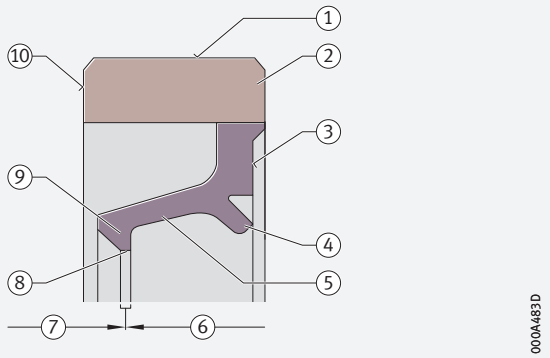

① *Outside surface*
② *Carrier*
③ *Back surface (with marking)*
④ *Protective lip*
⑤ *Membrane*
⑥ *Back face*
⑦ *End face*
⑧ *Seal contact surface*
⑨ *Seal lip*
⑩ *End surface*

1
Characteristics and areas of application of sealing rings

Criteria	Sealing ring		
	Single lip		Double lip
	GR	G	SD
Resistance			
Mineral oils and greases	Normally resistant	Normally resistant	Normally resistant
Highly blended, synthetic lubricants	Conditionally resistant	Conditionally resistant	Conditionally resistant
Aggressive media	Consultation necessary	Consultation necessary	Not resistant
Weather			
Light, air	Moderate	Moderate	Good
Humidity	Good	Good	Good
Contamination resistance (lip facing outwards)	Good	Good	Very good
Application: shaft			
Sealing integrity	Good	Good	Good
Maximum circumferential velocity	10 m/s	10 m/s	10 m/s
Application: rod			
Maximum stroke velocity	3 m/s	3 m/s	3 m/s
Application: housing			
Sealing integrity	Satisfactory	Very good	Good
Tight fit	Very good	Good	Good
Press-in force	Medium	Slight	High
Soft housing material	Conditionally suitable	Highly suitable	Suitable
High thermal expansion	Conditionally suitable	Suitable	Suitable
Split housing	Conditionally suitable	Suitable	Conditionally suitable

Operating behaviour

Normally used with rotating shaft

Sealing rings GR, G and SD are generally used in applications with a rotating shaft.

Static sealing of the housing bore

Sealing action is achieved by means of interference fit on the outside surface

The outside surface of the sealing rings gives static sealing of the housing bore. The sealing action is achieved when the sealing ring is pressed into the housing bore with an interference fit.

The firm seating and sealing action are decisively influenced:

- by the design and accuracy of the housing bore
- by the outside surface of the sealing ring
- by correct fitting of the sealing rings

Sealing rings G are suitable for fluid media

The rubber encased sealing rings G adapt particularly well to the surface of the housing bore. The application and usage for sealing against fluid media must be validated in each specific case.

Static/dynamic sealing of the shaft

The diameter of the seal lip in the fitted seal is smaller than the shaft diameter. As a result, the seal lip in the unfitted seal has interference of the radial force F_R (contact force). The radial force is the sum of all the component forces from the seal edge of the sealing ring that act towards the centre point of the shaft.

Factors influencing the contact force

It is dependent on:

- the deformation values of the seal lip – e.g. compression set, material hardness
- the geometry of the seal lip
- the operating temperature

Static sealing

With a stationary shaft, the seal integrity is primarily determined by the radial force.

Dynamic sealing

With a rotating shaft, the seal integrity is additionally influenced by:

- the surface of the shaft
- the geometrical and positional tolerances – e.g. coaxiality, runout, perpendicularity
- tribology – lubrication, friction, wear
- the speed
- the temperature
- contamination

Resistance and leakage

The sealing action is aided by a grease collar

The sealing rings are resistant to undoped lubricants with a mineral oil base. For other media, resistance must be checked. In leakage, the medium escapes from the area to be sealed, especially at the seal edge. Slight leakage cannot be completely prevented with contact seals due to the sealing mechanism (grease or fluid film) even if the sealing ring is fully functional. Leakage can occur in the form of gas or vapour, droplets or drops. In droplet or drop leakage, a thin film of fluid is formed on the shaft. The sealing action is aided by a grease collar.

Sealing on shaft with axial motion

The sealing ring performs a dual function as a wiper

With pure axial motion, the sealing ring acts as a wiper. As in the case of rotating shafts, it performs a dual function here. The sealing element:

- retains the lubricant in the area to be sealed
- prevents contaminants from penetrating the area to be sealed



The sealing action is dependent on the interference

The interference of the shaft/rod and seal lip diameter determines the sealing action. On the entry stroke of the rod, the sealing ring wipes away the lubricant and contaminant particles. The seal lip slides on the remaining lubricant film. On the counterstroke, lubricant is drawn out through the seal gap. This increases the lubricant film on the rod again.

Friction

Factors influencing the frictional torque

The friction is influenced by:

- the material pair (elastomer/steel)
- the surface of the shaft
- the interference (radial force F_R)
- the lubrication of the contact surface (shaft/seal edge or rod/seal edge)

With a rotating shaft or motion of the rod, the adhesive friction present during standstill is converted to sliding friction. If lubricant is supplied, mixed friction occurs. The frictional power of the sealing rings increases with the diameter and the speed of the shaft. When the shaft starts to move, the frictional torque is higher than in normal operation, especially after a long period of standstill. If there is a lack of lubricant, the seal lip is not lubricated. The displacement forces increase as a result of dry running. Furthermore, the seal lip is damaged.

Wear

Causes of wear

The following type of wear can occur at the seal edge:

- adhesive wear, e.g. if the seal lip sticks to the shaft after a long period of standstill
- if the seal edge slides on the contact surface
- under dry running
- if there are contaminant particles between the seal edge and the contact surface

The sealing function is impaired by deposits

After an extended running time, deposits may build up on the shaft/seal edge contact surface – e.g. comprising carbon and additive residues. These deposits can influence the sealing function and lead to leakage.

Wear grooves may occur on the shaft, especially if a soft shaft material is used or there is a heavy stream of contaminant particles.

Wear behaviour is influenced by the shaft material

The wear can be reduced by using a hardened shaft material or coated shafts. The abrasion resistance of NBR, FPM and HNBR elastomer is good, while that of TPU is very good.

Storage

Storage location

Sealing rings should be stored in dry, dust-free rooms – at a maximum relative humidity of 65%, moderate ventilation and free from draughts. Observe the storage room requirements in accordance with DIN 7716.

Protect sealing rings from:

- direct sunlight
- UV light
- ozone (e.g. produced by electrical equipment)
- intense thermal radiation

If these conditions are not maintained, this may cause unfavourable changes in the physical characteristics of the sealing rings (e.g. hardening).

Do not remove sealing rings from their original packaging until immediately before fitting.

Maximum storage time

The maximum storage time from manufacture to fitting is:

- 5 years for NBR
- 10 years for FPM/HNBR

Operating life

✎ *Factors influencing the operating life*

Physical, chemical and mechanical influences determine the operating life of sealing rings.

These include:

- ageing; the elastomer structure may undergo thermo-oxidative degradation, further crosslinking or embrittlement, depending on the environment and medium
- medium; media (fluids) may be dispersed within the structure or dissolve elastomer components. The elastomer may swell or contract as a result. If several media are affecting the seal at the same time, volume changes can be superimposed on each other and may be difficult to detect by optical means
- temperature; high temperatures and/or aggressive media can accelerate the decomposition and ageing processes
- wear and contamination

✎ *Empirical values for operating life*

The interaction of these influences is very complex. As a result, it is not possible to calculate the operating life of sealing rings; only values based on practical experience can be given. Under normal operating conditions, seals can achieve a maximum operating life of:

- 10 000 operating hours in continuous operation or 3 years to 5 years

The data given in ➤*994*|▦ *1* are guide values. They cannot be applied without restriction to all operating conditions. In case of doubt, please consult Schaeffler.

1.2 Lubrication

✎ *The seal edge must always be lubricated*

Sealing rings only function reliably if the seal edge is continually lubricated. Heat is generated at the seal edge. This is mainly dissipated to the shaft by the moving lubricant. Since elastomer gives only poor conduction of heat, heat cracks and wear can occur at the seal edge under inadequate lubrication. With grease lubrication, a grease collar protects the edge from excessive heating.

1.3 Temperature range

✎ *Excessively high temperatures can lead to loss of integrity at the seal edge*

The permissible operating temperature is dependent on the interaction between the medium, the temperature and its effect on the sealing ring material ➤*994*|▦ *1*. With increasing circumferential velocity, the temperature at the contact surface increases as a result of the increasing shear forces in the lubricant and the low thermal conductivity of the elastomer. If the temperature of the seal edge increases too much, wear and heat cracks may occur that impair the seal integrity.
The suitability of the sealing rings should be checked by tests as extremes of temperature are reached.

Possible operating temperatures of sealing rings ➤*997*|▦ *2*.

▦ **2**
Permissible temperature ranges

Operating temperature	Sealing rings G and GR in standard design	Sealing rings SD
	–30 °C to +110 °C depending on the medium acting on the sealing ring	–30 °C to +100 °C depending on the medium acting on the sealing ring

In the event of anticipated temperatures which lie outside the stated values, please contact Schaeffler.

1.4 Suffixes

Suffixes describe the design and features of a bearing in more detail.

3 *Suffixes and corresponding descriptions*

Suffix	Description of suffix	
FPM	Sealing rings G and GR for temperatures of –20 °C to +160 °C or circumferential velocities of up to 16 m/s	Special design, available by agreement only
HNBR	Sealing rings G and GR for temperatures of –30 °C to +140 °C or circumferential velocities of up to 12 m/s	

1.5 Structure of the product designation

With ***medias*** interchange, equivalent Schaeffler bearing designations can be determined for bearing designations from other rolling bearing manufacturers *https://www.schaeffler.de/std/1B69*.

Example of composition of product designation

The designation of sealing rings follows a set model.
Example ➤*998*| *5*.

5 *Sealing ring G: designation structure*

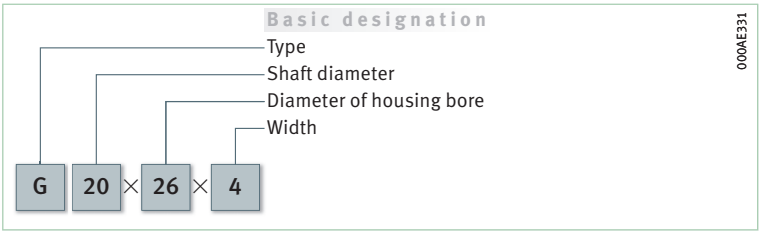

1.6 Design of bearing arrangements

Design of housing bore

The fit has a considerable influence on the seating of sealing rings

For a tight fit of the sealing rings in the housing bore, the values should be in accordance with ➤*999*| *5*. If the housing and sealing ring materials have considerably different coefficients of thermal expansion, the tight fit of the sealing ring may change under hot or cold conditions.

Chamfers on the housing bore

The housing bore should be chamfered in order to protect the sealing ring during fitting ➤*998*| *6* and ➤*998*| *4*. The remaining seating length must be at least the nominal width of the sealing rings.

The design of the chamfer on the housing bore should be in accordance with the data in DIN 3760.

6 *Chamfers on end of shaft and housing bore*

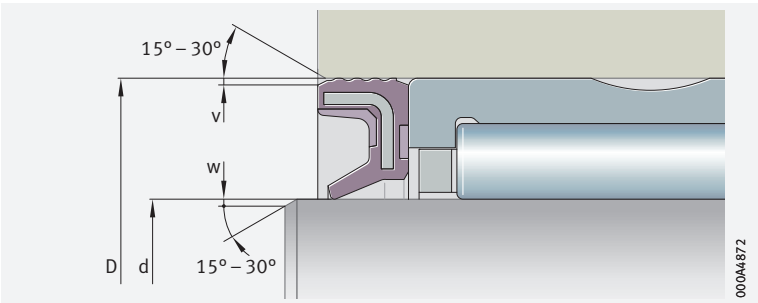

4 *Chamfer dimensions*

Chamfer	D ≦ 30 mm	D > 30 mm	d ≦ 30 mm	d > 30 mm
v_{min}	0,3	1% of D	–	–
w_{min}	–	–	0,3	0,5

Design of shaft

The surface hardness of the seal running surfaces should be ≧ 55 HRC

For a tight fit of the sealing rings on the shaft and seal running surfaces proven in practice, the values should be in accordance with ➤*999*| ▦ *5*. Where there are special requirements for sealing integrity, the values must be adjusted as necessary. Hard contaminant particles on the seal can
lead to wear of the seal running surface. For this reason, only materials with a hardness of ≧ 55 HRC can be recommended for use as a seal running surface ➤*999*| ▦ *5*. The steels normally used in machine building are suitable. The sliding surface for the seal lips must not have any surface imperfections in accordance with ISO 8785. The design of seal running surfaces in accordance with the requirements in DIN 3760 is recommended.

Hardened and ground bearing rings used as raceway

For bearing positions with heavy contamination impact, the use of hardened rings ground free from spiral marks – such as inner rings LR – as a raceway for the seal lip is advisable, since these can be replaced if wear occurs ➤*999*| ⧉ *7*.

If increased wear is expected, the running surface can be coated. In this case, please consult Schaeffler.

⧉ *7*
Ring hardened and ground free from spiral marks – inner ring LR

① *Single lip sealing ring G*
② *Needle roller bearing NK*
③ *Inner ring LR*

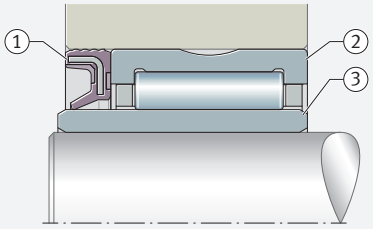

In order to protect the seal lips during fitting, the ends of shafts should be chamfered in accordance with DIN 3760 ➤*998*| ⧉ *6* and ➤*998*| ▦ *4*.

▦ *5*
Design of the shaft and housing bore

Sealing ring	Motion of shaft	Tolerance class of bore	Shaft		
			Tolerance class	Roughness	Hard-ness
G, GR, SD	Rotation only	G7 Ⓔ to R7 Ⓔ	g7 Ⓔ to k7 Ⓔ	0,2 ≦ Ramax ≦ 0,8	55 HRC or 600 HV
SD	Axial motion			Ramax 0,3	

1.7 Mounting and dismounting

Sealing rings must be handled and fitted correctly. This is the only way to ensure that they fulfil their sealing function correctly for a long period without problems.

Sealing lip orientation

Pay attention to the orientation of the seal lip:

- A seal lip facing outwards protects the bearing against the ingress of dust and contamination ➤*1000*| ⧉ *8*.
- A seal lip facing inwards prevents the egress of lubricant from the bearing ➤*1000*| ⧉ *8*

Sealing rings SD

In the case of sealing rings SD, the side with the protective lip is the marked side. If it should be relubricated from inside, the protective lip must face outwards.

8
Seal lip orientation

① *Seal lip facing outwards*
② *Sealing lip facing inwards*

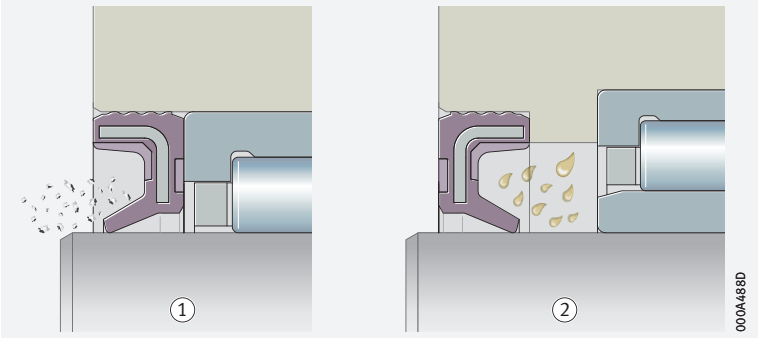

✎ *Mounting guidelines*

The running surface on the shaft and seal lip must be oiled or greased. This reduces the frictional energy during initial movement. In the case of sealing rings with an elastomer encased reinforcing ring – sealing ring G – the outside surface should be oiled before pressing in. This makes it easier to fit the seal in the housing.

✎ *Fitting tools*

Press sealing rings carefully into the housing bore using a pressing device and a suitable pressing tool ➤ *1000* | *9* and ➤ *1000* | *10*.

Ensure that the seal lip is not damaged. Cover any sharp-edged shaft ends, slots, teeth or threads by means of fitting sleeves. Fit sealing rings in such a way that the pressing-in force is applied as close as possible to the outside diameter.

9
Fitting using a pressing tool

① *Pressing tool (fitting mandrel)*

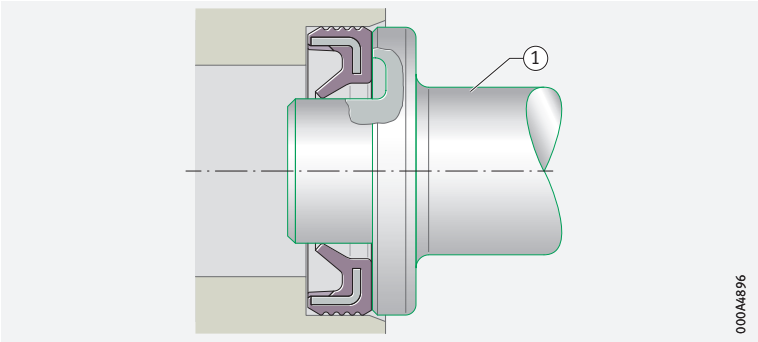

10
Fitting using a fitting sleeve

① *Fitting sleeve*

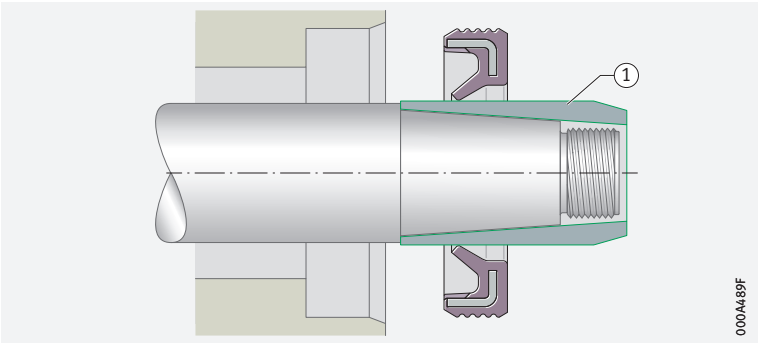

✎ *Pay attention to the perpendicular orientation of sealing rings*

Fit sealing rings perpendicular to the shaft axis and the housing bore. Do not exceed the maximum deviation in perpendicularity between the sealing ring and the shaft axis once fitted ➤ *1000* | *6*. Larger deviations will influence the sealing action.

6
Maximum perpendicularity deviation

Shaft diameter d mm	Maximum deviation mm
d < 25	0,1
d ≧ 25	0,2

Sealing ring SD

In the case of sealing rings SD, the space between the seal lip and protective lip must be filled with grease.

Checking of function

After fitting, allow the sealing rings to run in and check the sealing function. Slight leakage (forming a grease or liquid film) is desirable in order to lubricate the contact surface for the seal lips. The sealing action is aided by a grease collar.

Relubrication

During relubrication, increase the pressure only slowly.

1.8 Legal notice regarding data freshness

The further development of products may also result in technical changes to catalogue products

Of central interest to Schaeffler is the further development and optimisation of its products and the satisfaction of its customers. In order that you, as the customer, can keep yourself optimally informed about the progress that is being made here and with regard to the current technical status of the products, we publish any product changes which differ from the printed version in our electronic product catalogue.

§

We therefore reserve the right to make changes to the data and illustrations in this catalogue. This catalogue reflects the status at the time of printing. More recent publications released by us (as printed or digital media) will automatically precede this catalogue if they involve the same subject. Therefore, please always use our electronic product catalogue to check whether more up-to-date information or modification notices exist for your desired product.

Link to electronic product catalogue

The following link will take you to the Schaeffler electronic product catalogue: *https://medias.schaeffler.com*.



Sealing rings

Single lip or double lip

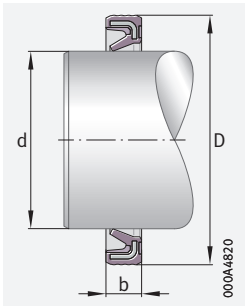

G
Single lip

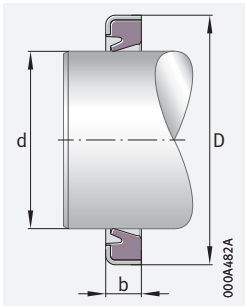

GR
Single lip

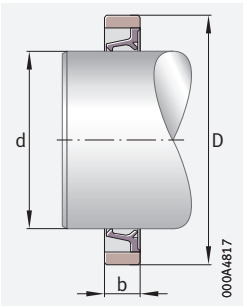

SD
Double lip

d = 4 – 80 mm

Sealing ring			Designation ➤998|1.4 ➤998|1.5			Mass m Sealing ring		
G	GR	SD	d×	D×	b[1]	G ≈ g	GR ≈ g	SD ≈ g
	GR[2]		**4**	**8**	**2**		0,2	
	GR[2]		**5**	**9**	**2**		0,2	
	GR[2]		**5**	**10**	**2**		0,2	
	GR[2]		**6**	**10**	**2**		0,2	
	GR[2]		**6**	**12**	**2**		0,4	
	GR[2]		**7**	**11**	**2**		0,3	
	GR[2]		**7**	**14**	**2**		0,5	
G[2]	4)	4)	**8**	**12**	**3**	0,4		
G[2]	4)	**SD**[2]	**8**	**15**	**3**	0,7		0,3
G[2]	**GR**[2]	4)	**9**	**13**	**3**	0,5	0,5	
G[2]	4)	4)	**9**	**16**	**3**	0,7		
G[2]	**GR**[2]	4)	**10**	**14**	**3**	0,5	0,5	
G[2]	4)	**SD**[2]	**10**	**17**	**3**	0,9		0,4
G[2]	**GR**[2]	4)	**12**	**16**	**3**	0,6	0,6	
G[2]	4)	**SD**[2]	**12**	**18**	**3**	0,9		0,4
G[2]	**GR**[2]	**SD**[2]	**12**	**19**	**3**	1	1	0,5
G[2]	4)	4)	**13**	**19**	**3**	0,9		
G[2]	3)	**SD**[2]	**14**	**20**	**3**	1		0,5
G[2]	4)	4)	**14**	**21**	**3**	1,1		
G[2]	3)	**SD**[2]	**14**	**22**	**3**	1,3		0,7
G[2]	3)	**SD**[2]	**15**	**21**	**3**	1		0,5
G[2]	3)	**SD**[2]	**15**	**23**	**3**	1,3		0,7
G[2]	3)	**SD**[2]	**16**	**22**	**3**	1,3		0,6
G[2]	3)	**SD**[2]	**16**	**24**	**3**	1,3		0,7
G[2]	4)	4)	**16**	**25**	**3**	1,6		
G[2]	3)	**SD**[2]	**17**	**23**	**3**	1,3		0,6
G[2]	4)	**SD**[2]	**17**	**25**	**3**	1,5		0,8
G[2]	4)	**SD**[2]	**18**	**24**	**3**	1,2		0,6
G[2]	4)	**SD**[2]	**18**	**26**	**4**	1,8		1,1
G[2]	4)	**SD**[2]	**19**	**27**	**4**	2		1,1
G[2]	3)	**SD**[2]	**20**	**26**	**4**	1,8		0,8
G[2]	3)	**SD**[2]	**20**	**28**	**4**	2,1		1,1
G[2]	4)	4)	**21**	**29**	**4**	2,2		
G[2]	3)	**SD**[2]	**22**	**28**	**4**	1,8		0,9
G[2]	3)	**SD**[2]	**22**	**30**	**4**	2,2		1,3

Sealing ring			Designation ➤998|1.4 ➤998|1.5			Mass m Sealing ring		
G	GR	SD	d×	D×	b[1]	G ≈ g	GR ≈ g	SD ≈ g
G[2]	3)	4)	**24**	**32**	**4**	2,5		
G[2]	3)	**SD**[2]	**25**	**32**	**4**	2,3		1,3
G[2]	4)	**SD**[2]	**25**	**33**	**4**	2,5		1,3
G[2]	3)	**SD**[2]	**25**	**35**	**4**	2,6		1,9
G[2]	4)	**SD**[2]	**26**	**34**	**4**	2,6		1,4
G[2]	3)	**SD**[2]	**28**	**35**	**4**	2,4		1,3
G[2]	3)	4)	**28**	**37**	**4**	3,1		
G[2]	4)	4)	**29**	**38**	**4**	3,2		
G[2]	3)	**SD**[2]	**30**	**37**	**4**	2,7		1,3
G[2]	3)	**SD**[2]	**30**	**40**	**4**	3,6		2,1
G[2]	4)	**SD**[2]	**32**	**42**	**4**	3,7		2,4
G[2]	4)	4)	**32**	**45**	**4**	5,1		
G[2]	3)	**SD**[2]	**35**	**42**	**4**	3		1,5
G[2]	4)	**SD**[2]	**35**	**45**	**4**	4,1		2,5
G[2]	4)	**SD**[2]	**37**	**47**	**4**	4		2,7
G[2]	4)	**SD**[2]	**38**	**48**	**4**	4,4		2,8
G[2]	4)	**SD**[2]	**40**	**47**	**4**	3,3		1,7
G[2]	3)	**SD**[2]	**40**	**50**	**4**	4,6		2,9
G[2]	3)	**SD**[2]	**40**	**52**	**5**	4,8		4,5
G[2]	3)	**SD**[2]	**42**	**52**	**4**	4,7		3
G[2]	4)	4)	**43**	**53**	**4**	4,8		
G[2]	3)	**SD**[2]	**45**	**52**	**4**	3,8		1,9
G[2]	3)	**SD**[2]	**45**	**55**	**4**	5,2		3,2
G[2]	3)	**SD**[2]	**50**	**58**	**4**	4,5		2,4
G[2]	3)	**SD**[2]	**50**	**62**	**5**	10,4		5,5
G[2]	3)		**55**	**63**	**5**	7,1		
G[2]	3)		**70**	**78**	**5**	9		
G[2]	4)		**80**	**90**	**5**	13,8		

medias *https://www.schaeffler.de/std/1F9A*

Special designs, available by agreement.

1) Width tolerance ±0,2.

2) **Standard range.**

3) Please request information on delivery capability.

4) Available by agreement for economically viable batch sizes.





Axial deep groove ball bearings



Matrix for bearing preselection 1007

1 Axial deep groove ball bearings 1008

1.1 Bearing design 1008
1.2 Load carrying capacity 1010
1.3 Compensation of angular misalignments 1010
1.4 Lubrication 1010
1.5 Sealing 1011
1.6 Speeds 1011

1.7 Noise *1011*
1.8 Temperature range *1012*
1.9 Cages *1012*
1.10 Internal clearance *1013*
1.11 Dimensions, tolerances *1013*
1.12 Suffixes *1014*
1.13 Structure of bearing designation *1014*
1.14 Dimensioning *1014*
1.15 Minimum load *1015*
1.16 Design of bearing arrangements *1015*
1.17 Mounting and dismounting *1016*
1.18 Legal notice regarding data freshness *1016*
1.19 Further information *1017*
Product tables *1018*
Axial deep groove ball bearings, single direction *1018*
Axial deep groove ball bearings, double direction *1030*

Matrix for bearing preselection

The matrix gives an overview of the types and design features.

It can be used to make a preliminary assessment of whether a bearing is fundamentally suitable for the envisaged application.

The additional information provided in the product chapter (see column "detailed information") and in the Technical principles must, however, be observed in addition to this overview in selection of the bearing.

+++ extremely suitable
++ highly suitable
+ suitable
(+) suitable with restrictions
– not suitable/not applicable
✓ available

Design features and suitability			Axial deep groove ball bearings: single direction	Axial deep groove ball bearings: double direction	detailed information ➤ 1008
Load carrying capacity	radial		–	–	➤ 1010 | 1.2
	axial, one direction		++	++	➤ 1010 | 1.2
	axial, both directions		–	++	➤ 1010 | 1.2
	moments		–	–	➤ 1010 | 1.2
Compensation of angular misalignments	static		(+)[1]	(+)[1]	➤ 1010 | 1.3
	dynamic		–	–	➤ 1010 | 1.3
Bearing design	cylindrical bore		✓	✓	➤ 1008 | 1.1
	tapered bore		–	–	➤ 1008 | 1.1
	separable		✓	✓	➤ 1016 | 1.17
Lubrication	greased		–	–	➤ 1010 | 1.4
Sealing	open		✓	✓	➤ 1011 | 1.5
	non-contact		–	–	–
	contact		–	–	–
Operating temperature in °C	from to		–30 +150[1]	–30 +150[1]	➤ 1012 | 1.8
Suitability for	high speeds		+	+	➤ 1011 | 1.6
	high running accuracy		+	+	➤ 1013 | 1.11 ➤ 115
	low-noise running		(+)	(+)	➤ 1011 | 1.7 ➤ 27
	high rigidity		++	++	➤ 54
	reduced friction		+	+	➤ 56
	length compensation within bearing		–	–	–
	non-locating bearing arrangement		–	–	➤ 141
	locating bearing arrangement		+++	+++	➤ 141
X-life bearings		X-life	–	–	–
Bearing bore d in mm	from to		10 260[2]	10 190	➤ 1018 ➤ 1030
Product tables	from page ➤		1018	1030	

[1] Valid for bearings with spherical housing locating washer

[2] Larger catalogue bearings GL 1

1 Axial deep groove ball bearings

Axial deep groove ball bearings:

- are standardised, ready-to-fit units with high axial load carrying capacity ➤*1009*|*2* and ➤*1009*|*3*
- are suitable exclusively for the support of predominantly axial loads ➤*1010*|*1.2*
- are particularly suitable where the bearing position is subjected to high axial loads from one or both sides, but the requirements for axial load carrying capacity of the bearings are not so high that axial cylindrical roller bearings with even higher load carrying capacity must be used
- permit higher speeds than roller or needle roller and cage assemblies ➤*1008*|*1*
- compensate, in conjunction with a spherical housing locating washer, static misalignments between the shaft and housing ➤*1010*|*1.3*

For an overview of other product-specific features, see the Matrix for bearing preselection ➤*1007*.

1
Axial deep groove ball bearing: comparison of speed and load carrying capacity with axial cylindrical roller bearing and axial needle roller and cage assembly

n_G = *limiting speed*
F_a = *axial load*
C_a = *basic axial dynamic load rating*

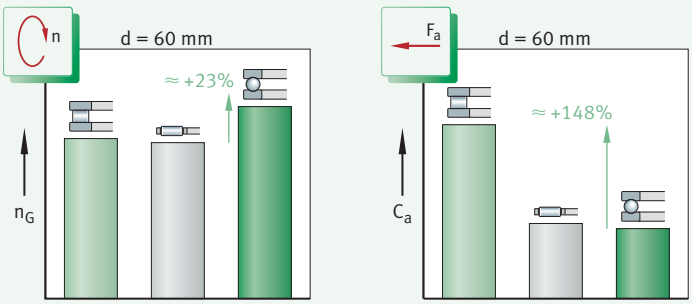

1.1 Bearing design

✎ *Design variants*

Axial deep groove ball bearings are available as:

- single direction bearings ➤*1009*|*2*
- double direction bearings ➤*1009*|*3*

Basic bearing design

✎ *Non-self-retaining, easy-to-fit bearing units*

Axial deep groove ball bearings are part of the group of axial ball bearings. The bearings are of a multi-piece construction and, due to their design, are not self-retaining. As a result, it is possible to mount the bearing parts (shaft locating washer, housing locating washer, ball and cage assembly, support washer) separately from each other. In order to guide the balls, the shaft and housing locating washer have raceway grooves (formed rolling element raceways) with a defined osculation, in which the rolling elements circulate. The ball set is retained by a sheet steel cage or a solid brass cage ➤*1012*|*2*. When using these bearings, the designer does not need to produce the bearing parts for his bearing arrangement and match these to each other himself, but can instead use a standarised, ready-to-fit unit.

Single direction axial deep groove ball bearings

Ready-to-fit bearing unit for compact axial designs

These axial deep groove ball bearings comprise a shaft locating washer, a housing locating washer and a ball and cage assembly ➤*1009*|*2*. In order to ensure centring of the washers with a precise fit, the bore of the shaft locating washer (d) is ground. In contrast, the bore of the housing locating washer (D_1) is more generously dimensioned and is turned. The housing locating washer can be flat or spherical and can be configured with or without a support washer. The support washers U2 and U3 must be ordered in addition to the bearing. Load carrying capacity of single direction bearings ➤*1010*|*1.2*.

2
Axial deep groove ball bearings, single direction

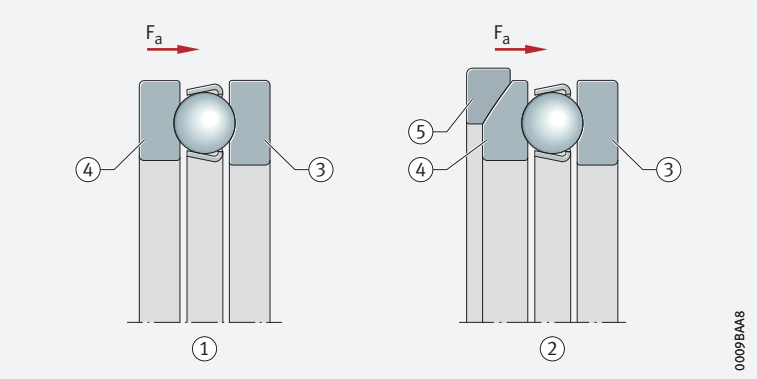

F_a = *axial load*

① *Axial deep groove ball bearing with flat housing locating washer*
② *Axial deep groove ball bearing with spherical housing locating washer and support washer*
③ *Shaft locating washer*
④ *Housing locating washer (flat or spherical)*
⑤ *Support washer*

Double direction axial deep groove ball bearings

Ready-to-fit bearing unit, suitable for combination with support washers

Double direction bearings comprise a shaft locating washer, two housing locating washers and two ball and cage assemblies ➤*1009*|*3*. They can also be combined with support washers U2 and U3. The housing locating washers and ball sets correspond to the designs of the single direction bearings. Load carrying capacity of double direction bearings ➤*1010*|*1.2*.

3
Axial deep groove ball bearings, double direction

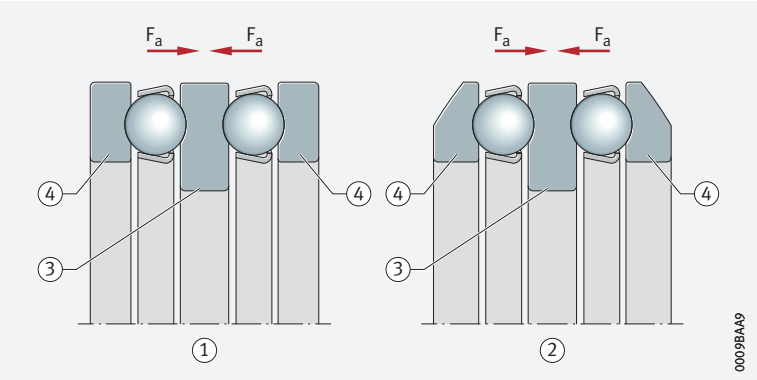

F_a = *axial load*

① *Axial deep groove ball bearing with flat housing locating washers*
② *Axial deep groove ball bearing with spherical housing locating washers, without support washer*
③ *Shaft locating washer*
④ *Housing locating washer (flat or spherical)*

1.2 Load carrying capacity

Axial deep groove ball bearings are suitable for the support of predominantly axial loads. They must not be subjected to predominantly radial loads.

✎ *Single direction bearings*

Single direction axial deep groove ball bearings can support axial forces in one direction and support the shaft on one side ➤*1009*|🗀*2*.

✎ *Double direction bearings*

Double direction axial deep groove ball bearings support axial forces in both directions and can guide the shaft on both sides ➤*1009*|🗀*3*.

1.3 Compensation of angular misalignments

Axial deep groove ball bearings react with high sensitivity to angular misalignments. In cases where the contact face for the housing locating washer is not vertical (perpendicular) to the bearing axis, the angular misalignment can be compensated by means of bearings with a spherical housing locating washer and support washer ➤*1009*|🗀*2*.

Single direction bearings

✎ *Series 511, 512, 513, 514 do not permit angular adjustment*

Bearings of series 511, 512, 513 and 514 have a flat housing locating washer. As a result, they do not permit angular misalignment or skewing between the shaft and housing.

✎ *Series 532, 533 permit angular adjustment*

Bearings of series 532 and 533 have a spherical housing locating washer. With an appropriate housing design and in conjunction with support washers U2 and U3, they are variable in angle as a result and can therefore tolerate static misalignments of the shaft relative to the housing within certain limits.

Double direction bearings

✎ *Series 522, 523 do not permit angular adjustment*

Bearings of series 522 and 523 have two flat housing locating washers and do not permit angular adjustment.

✎ *Series 542, 543 permit angular adjustment*

Bearings of series 542 and 543 have spherical housing locating washers. With an appropriate housing design and in conjunction with support washers U2 and U3, they are variable in angle as a result and can therefore tolerate static misalignments of the shaft relative to the housing within certain limits.

1.4 Lubrication

✎ *Oil or grease lubrication is possible*

The bearings are not greased. In order to prevent direct metallic contact between rolling elements, raceways and cages, they must be lubricated. Oil or grease lubrication is suitable. The lubricant reduces the wear and also protects the surfaces against corrosion. The choice of lubricant is essentially dependent on the operating temperatures and the speeds; it is also influenced, however, by the load, mounting position, osculations etc.

If there is any uncertainty regarding the suitability of the selected lubricant for the application, please consult Schaeffler or the lubricant manufacturer.

1.5 Sealing

The bearings are of an open design

Axial deep groove ball bearings are supplied without seals. As a result, sealing of the bearing position must be carried out in the adjacent construction. This must reliably prevent:

- moisture and contaminants from entering the bearing
- the egress of lubricant from the bearing

1.6 Speeds

Speeds in the product tables

The product tables generally give two speeds for the bearings:

- the kinematic limiting speed n_G
- the thermal speed rating $n_{\vartheta r}$

Limiting speeds

The limiting speed n_G is the kinematically permissible speed of the bearing. Even under favourable mounting and operating conditions, this value should not be exceeded without prior consultation with Schaeffler ➤64.

The values in the product tables are valid for oil lubrication.

Values for grease lubrication

For grease lubrication, 75% of the value stated in the product tables is permissible in each case.

Reference speeds

$n_{\vartheta r}$ is used to calculate n_ϑ

The thermal speed rating $n_{\vartheta r}$ is not an application-oriented speed limit, but is a calculated ancillary value for determining the thermally safe operating speed n_ϑ ➤64.

1.7 Noise

Schaeffler Noise Index

The Schaeffler Noise Index (SGI) is not yet available for this bearing type ➤69. The data for these bearing series will be introduced and updated in stages.

Further information:

- ***medias*** *https://medias.schaeffler.com*

1.8 Temperature range

Limiting values

The operating temperature of the bearings is limited by:

- the dimensional stability of the bearing washers and rolling elements
- the support washers
- the cage
- the lubricant

–30 °C to +150 °C

Possible operating temperatures for axial deep groove ball bearings ➤*1012*| ▦ *1*. The support washers are made from rolling bearing steel and are suitable for the same temperatures as the bearing washers and rolling elements. The temperature limit values of the lubricant must be observed.

▦ **1**
Permissible temperature ranges

Operating temperature	Axial deep groove ball bearings with sheet steel or brass cages
	–30 °C to +150 °C

In the event of anticipated temperatures which lie outside the stated values, please contact Schaeffler.

1.9 Cages

Sheet steel cages or solid brass cages are used as standard

Standard cages for axial deep groove ball bearings ➤*1012*| ▦ *2*. Other cage designs are available by agreement. With such cages, however, suitability for high speeds and temperatures as well as the basic load ratings may differ from the values for the bearings with standard cages. Bearings with sheet steel cages do not have a cage suffix ➤*1012*| ▦ *2*.

If there is any uncertainty regarding cage suitability for a specific application, please consult Schaeffler.

▦ **2**
Cage, cage suffix, bore code

Bearing series	Sheet steel cage –	Solid brass cage MP
	Bore code	
511	up to 28	from 30
512	up to 28	from 30
513	up to 20	from 22
514	up to 11	from 12
522	up to 28	from 30
523	up to 20	from 22
524	06 to 11	–
532	up to 28	from 30
533	up to 20	from 22
534	06 to 11	–
542	up to 28	from 30
543	up to 20	22, 24
544	06 to 11	–

1.10 Internal clearance

✎Axial clearance and preload is determined by the application

In the case of axial deep groove ball bearings, the internal clearance (axial clearance) is only achieved when the bearings are mounted. The requisite axial clearance of the bearing arrangement is dependent on the application and must take account of the conditions in the bearing arrangement while warm from operation and subjected to load. If axial deep groove ball bearings are subjected to vibrations while under predominantly static load for example, they must be lightly preloaded. Preload can be applied, for example, using housing nuts ➤*1013*|*4*. Other suitable means include shaft nuts, disc springs, calibrated sheets (shims) etc. It must always be ensured that no slippage occurs in operation between the rolling elements and raceways ➤*1015*|*1.15*. It must also be ensured that the preload does not exceed the optimum value, otherwise there will be an increase in friction and therefore in heat generation in the bearing. These will both have a negative effect on the operating life of the bearings.

If there is any uncertainty regarding the setting of the axial clearance, Schaeffler must always be consulted.

4

Setting the axial clearance of a double direction axial deep groove ball bearing by means of a housing nut

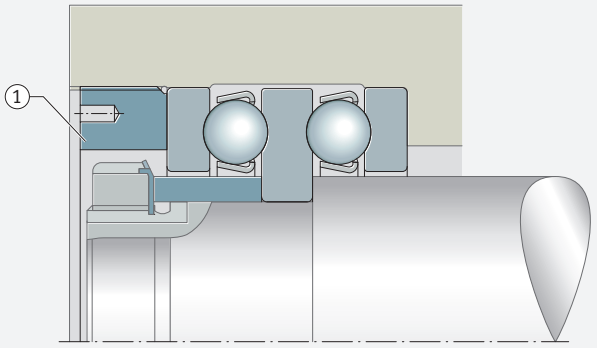

① *Housing nut*

1.11 Dimensions, tolerances

Dimension standards

Bearings with a flat locating surface on the housing locating washer correspond to ISO 104:2015 or DIN 616:2000 and DIN 711:2010 as well as DIN 715:2011.

Bearings with a spherical locating surface on the housing locating washer correspond to ISO 20516:2007 and DIN 711:2010 as well as DIN 715:2011.

Chamfer dimensions

The limiting dimensions for chamfer dimensions correspond to DIN 620-6:2004. Overview and limiting values ➤*140*.
Nominal value of chamfer dimension ➤*1018*|▦.

Tolerances

The tolerances for the dimensional and running accuracy of axial deep groove ball bearings correspond to tolerance class Normal in accordance with ISO 199:2014. Tolerance values in accordance with ISO 199 ➤*135*|▦*25* to ➤*137*|▦*28*.

1.12 Suffixes

Suffixes describe the design and features of a bearing in more detail.

3 *Suffixes and corresponding descriptions*

Suffix	Description of suffix	
MP	Solid brass cage, ball-guided	Standard
P5	Bearing in tolerance class 5	Special design, available by agreement
P6	Bearing in tolerance class 6	

1.13 Structure of bearing designation

With ***medias*** interchange, equivalent Schaeffler bearing designations can be determined for bearing designations from other rolling bearing manufacturers *https://www.schaeffler.de/std/1B69*.

✎ *Examples of composition of bearing designation*

The designation of bearings follows a set model.
Examples ➤*1014*|*5* and ➤*1014*|*6*.
The composition of designations is subject to DIN 623-1 ➤*102*|*10*.

5 *Axial deep groove ball bearing, single direction, with spherical housing locating washer and support washer: designation structure*

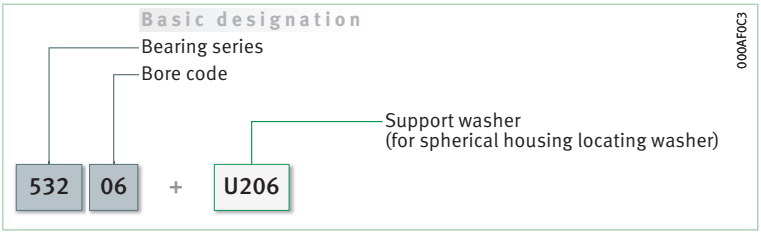

6 *Axial deep groove ball bearing, double direction, with spherical housing locating washers: designation structure*

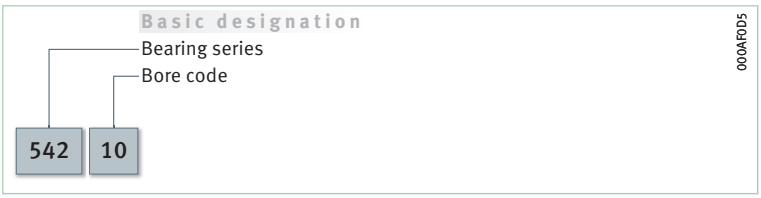

1.14 Dimensioning

Equivalent dynamic bearing load

✎ $P = F_a$

Axial deep groove ball bearings can only support axial forces ➤*1010*|*1.2*.
As a result, $P = F_a$ ➤*1014*|*f 1*.

f 1 *Equivalent dynamic load*

$$P = F_a$$

Legend

P	N	Equivalent dynamic bearing load
F_a	N	Axial load.

Equivalent static bearing load

✎ $P_0 = F_{0a}$

Since the bearings can only support axial loads, $P_0 = F_{0a}$ ➤*1014*|*f 2*.

f 2 *Equivalent static load*

$$P_0 = F_{0a}$$

Legend

P_0	N	Equivalent static bearing load
F_{0a}	N	Largest axial load present (maximum load).

Static load safety factor

✎ $S_0 = C_0/P_0$

In addition to the basic rating life L (L_{10h}), it is also always necessary to check the static load safety factor S_0 ➤ *1015* | *f 3*.

f 3
Static load safety factor

$$S_0 = \frac{C_0}{P_0}$$

Legend

S_0	–	Static load safety factor
C_0	N	Basic static load rating
P_0	N	Equivalent static bearing load.

1.15 Minimum load

✎ *In order to prevent damage due to slippage, a minimum axial load of $F_{a\,min}$ is required*

Under axial load, the balls are guided under favourable rolling conditions at the base of the groove. This deteriorates, however, if the centrifugal force occurring at higher speeds and very low loads presses the balls outwards. In this case, detrimental sliding motions can occur between the rolling elements and the raceways due to centrifugal forces and gyroscopic moments. In order to prevent these sliding motions, the bearings must be subjected to the minimum axial load $F_{a\,min}$ ➤ *1015* | *f 4*. This can also be achieved by means of preloading, for example using springs. The minimum load factor A is given in the product tables. For n_{max}, the maximum operating speed must be used.

f 4
Minimum axial load

$$F_{a\,min} = 1000 \cdot A \cdot \left(\frac{n_{max}}{1000}\right)^2$$

Legend

$F_{a\,min}$	N	Minimum axial load
A	–	Minimum load factor ➤ *1018*
n_{max}	min^{-1}	Maximum operating speed.

1.16 Design of bearing arrangements

✎ *In the case of misalignments: use spherical support washers or produce the locating surface in the housing to a spherical design*

Bearings with spherical housing locating washers can compensate, in conjunction with a spherical bearing seating surface, misalignments between the locating surface in the housing and on the shaft ➤ *1010* | *1.3*. These bearings can be mounted together with support washers also of a spherical design or directly in the housing. In this case, however, the locating surface in the housing must also be of a spherical design.

✎ *Shaft tolerances*

Single direction bearings should have the shaft tolerance j6 Ⓔ, while k6 Ⓔ should be selected for double direction bearings.

✎ *Tolerances for the housing bore*

The tolerance of the locating bore is dependent on the running accuracy to be achieved. For normal running accuracy, it should be in the tolerance class E8 Ⓔ, for high running accuracy, it should be in the tolerance class H6 Ⓔ.

Mounting dimensions for the contact surfaces of bearing rings

✎ *The contact surfaces for the washers must be of sufficient height*

The shoulders on the adjacent construction (shaft and housing) must be sufficiently high that the shaft and housing locating washers are supported over at least half their height. The abutment shoulders should be rigid, flat and perpendicular to the axis of rotation. Proven mounting dimensions for the radii and diameters of abutment shoulders are given in the product tables ➤ *1018*. These dimensions are limiting dimensions (maximum or minimum dimensions); the actual values should not be higher or lower than specified.

1.17 Mounting and dismounting

✎ Do not transpose the shaft and housing locating washer

In the case of single direction bearings, it must be ensured that the shaft and housing locating washer are not exchanged with each other but are mounted in the correct position.

On the shaft locating washer, the bore d is ground and the outside diameter d_1 is not ground ➤ *1016* | *7*. For reliable operation, the shaft locating washer should always abut a shoulder of corresponding dimensions or a support ring securely located on the shaft.

✎ As the bearings are not self-retaining, they are easy to mount

Axial deep groove ball bearings are not self-retaining. As a result, the bearing washers and the ball and cage assembly can be mounted separately from each other ➤ *1008* | *1.1*. This gives simplified mounting of the bearings.

7
Axial deep groove ball bearing, single direction

① *Shaft locating washer, bore d ground, outside diameter d_1 not ground*

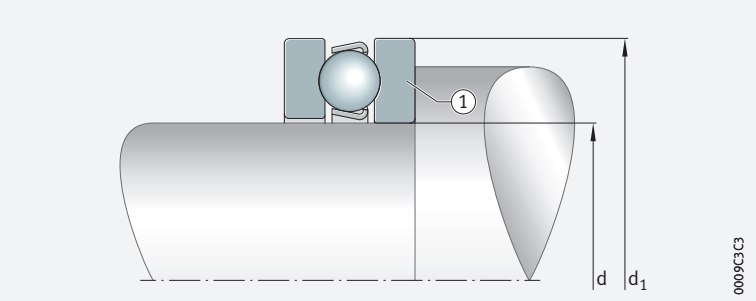

Schaeffler Mounting Handbook

✎ Rolling bearings must be handled with great care

Rolling bearings are well-proven precision machine elements for the design of economical and reliable bearing arrangements, which offer high operational security. In order that these products can function correctly and achieve the envisaged operating life without detrimental effect, they must be handled with care.

The Schaeffler Mounting Handbook MH 1 gives comprehensive information about the correct storage, mounting, dismounting and maintenance of rotary rolling bearings *https://www.schaeffler.de/std/1D53*. It also provides information which should be observed by the designer, in relation to the mounting, dismounting and maintenance of bearings, in the original design of the bearing position. This book is available from Schaeffler on request.

1.18 Legal notice regarding data freshness

✎ The further development of products may also result in technical changes to catalogue products

Of central interest to Schaeffler is the further development and optimisation of its products and the satisfaction of its customers. In order that you, as the customer, can keep yourself optimally informed about the progress that is being made here and with regard to the current technical status of the products, we publish any product changes which differ from the printed version in our electronic product catalogue.

We therefore reserve the right to make changes to the data and illustrations in this catalogue. This catalogue reflects the status at the time of printing. More recent publications released by us (as printed or digital media) will automatically precede this catalogue if they involve the same subject. Therefore, please always use our electronic product catalogue to check whether more up-to-date information or modification notices exist for your desired product.

Link to electronic product catalogue

The following link will take you to the Schaeffler electronic product catalogue: *https://medias.schaeffler.com*.

1.19 Further information

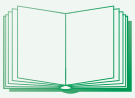

In addition to the data in this chapter, the following chapters in Technical principles must also be observed in the design of bearing arrangements:

- Determining the bearing size ➤*34*
- Rigidity ➤*54*
- Friction and increases in temperature ➤*56*
- Speeds ➤*64*
- Bearing data ➤*97*
- Lubrication ➤*70*
- Sealing ➤*185*
- Design of bearing arrangements ➤*141*
- Mounting and dismounting ➤*194*

Axial deep groove ball bearings

Single direction

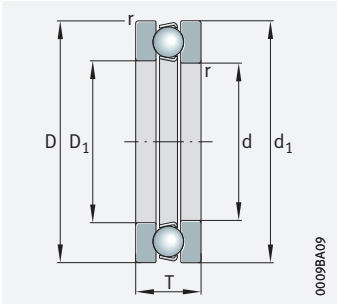

511, 512, 513, 514

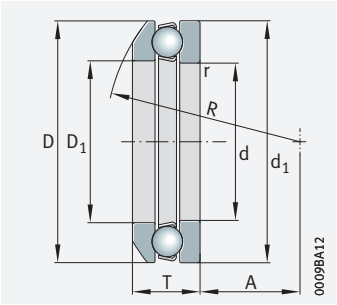

532, 533
Spherical housing locating washer

d = 10 – 30 mm

Main dimensions			Basic load ratings		Fatigue limit load	Minimum load factor	Limiting speed	Speed rating	Mass m		Designation ➤1014|1.12 ➤1014|1.13	
d	D	T	dyn. C_a N	stat. C_{0a} N	C_{ua} N	A	n_G min^{-1}	$n_{\vartheta r}$ min^{-1}	Bearing ≈ kg	Support washer ≈ kg	Bearing	Support washer
10	24	9	10 000	14 000	640	0,001	12 700	19 200	0,018	–	**51100**	**–**
	26	11	12 700	17 100	780	0,002	10 900	19 100	0,03	–	**51200**	**–**
	26	11,6	12 700	17 100	780	0,002	10 900	19 100	0,028	0,008	**53200**	**U200**
12	26	9	10 300	15 400	710	0,001	13 100	16 900	0,021	–	**51101**	**–**
	28	11	13 200	19 000	870	0,002	11 300	16 900	0,03	–	**51201**	**–**
	28	11,4	13 200	19 000	870	0,002	11 300	16 900	0,03	0,009	**53201**	**U201**
15	28	9	10 500	16 800	770	0,002	13 100	14 000	0,027	–	**51102**	**–**
	32	12	16 600	24 800	1 130	0,003	9 800	14 300	0,049	–	**51202**	**–**
	32	13,3	16 600	24 800	1 130	0,003	9 800	14 300	0,048	0,013	**53202**	**U202**
17	30	9	11 300	19 600	900	0,002	12 900	12 500	0,028	–	**51103**	**–**
	35	12	17 200	27 500	1 240	0,004	9 700	13 200	0,052	–	**51203**	**–**
	35	13,2	17 200	27 500	1 240	0,004	9 700	13 200	0,055	0,015	**53203**	**U203**
20	35	10	15 000	26 500	1 210	0,004	10 900	11 100	0,04	–	**51104**	**–**
	40	14	21 100	37 500	1 700	0,007	8 500	11 600	0,082	–	**51204**	**–**
	40	14,7	21 100	37 500	1 700	0,007	8 500	11 600	0,081	0,02	**53204**	**U204**
25	42	11	18 100	35 500	1 620	0,006	9 700	9 500	0,055	–	**51105**	**–**
	47	15	26 500	50 000	2 280	0,013	7 500	9 800	0,114	–	**51205**	**–**
	47	16,7	26 500	50 000	2 280	0,013	7 500	9 800	0,121	0,031	**53205**	**U205**
	52	18	34 500	55 000	2 500	0,019	6 000	10 400	0,154	–	**51305**	**–**
	52	19,8	34 500	55 000	2 500	0,019	6 000	10 400	0,203	0,043	**53305**	**U305**
	60	24	43 000	66 000	3 000	0,032	4 700	10 900	0,295	–	**51405**	**–**
30	47	11	18 800	40 000	1 820	0,008	9 300	8 100	0,063	–	**51106**	**–**
	52	16	23 900	46 000	2 100	0,014	7 300	8 600	0,136	–	**51206**	**–**
	52	17,8	23 900	46 000	2 100	0,014	7 300	8 600	0,147	0,032	**53206**	**U206**
	60	21	35 500	65 000	2 950	0,028	5 700	9 300	0,244	–	**51306**	**–**
	60	22,6	35 500	65 000	2 950	0,028	5 700	9 300	0,303	0,055	**53306**	**U306**
	70	28	70 000	112 000	5 200	0,077	3 850	9 100	0,49	–	**51406**	**–**

medias *https://www.schaeffler.de/std/1F9A*

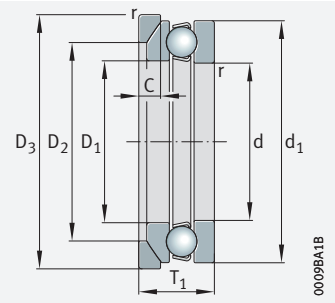

532, 533
Spherical housing locating washer
Support washer U2, U3

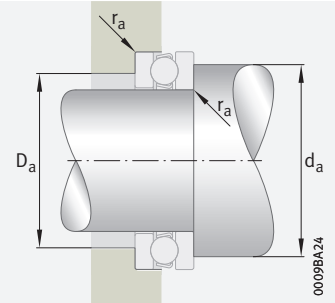

Mounting dimensions

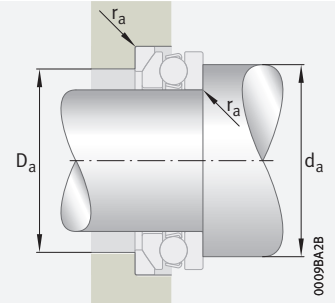

Mounting dimensions

Dimensions										Mounting dimensions		
d	D_1	d_1	r min.	R	A	D_2	D_3	C	T_1	d_a min.	D_a max.	r_a max.
10	11	24	0,3	–	–	–	–	–	–	18	16	0,3
	12	26	0,6	–	–	–	–	–	–	20	16	0,6
	12	26	0,6	22	8,5	18	28	3,5	13	20	18	0,6
12	13	26	0,3	–	–	–	–	–	–	20	18	0,3
	14	28	0,6	–	–	–	–	–	–	22	18	0,6
	14	28	0,6	25	11,5	20	30	3,5	13	22	20	0,6
15	16	28	0,3	–	–	–	–	–	–	23	20	0,3
	17	32	0,6	–	–	–	–	–	–	25	22	0,6
	17	32	0,6	28	12	24	35	4	15	25	24	0,6
17	18	30	0,3	–	–	–	–	–	–	25	22	0,3
	19	35	0,6	–	–	–	–	–	–	28	24	0,6
	19	35	0,6	32	16	26	38	4	15	28	26	0,6
20	21	35	0,3	–	–	–	–	–	–	29	26	0,3
	22	40	0,6	–	–	–	–	–	–	32	28	0,6
	22	40	0,6	36	18	30	42	5	17	32	30	0,6
25	26	42	0,6	–	–	–	–	–	–	35	32	0,6
	27	47	0,6	–	–	–	–	–	–	38	34	0,6
	27	47	0,6	40	19	36	50	5,5	19	38	36	0,6
	27	52	1	–	–	–	–	–	–	41	36	1
	27	52	1	45	21	38	55	6	22	41	38	1
	27	60	1	–	–	–	–	–	–	46	39	1
30	32	47	0,6	–	–	–	–	–	–	40	37	0,6
	32	52	0,6	–	–	–	–	–	–	43	39	0,6
	32	52	0,6	45	22	42	55	5,5	20	43	42	0,6
	32	60	1	–	–	–	–	–	–	48	42	1
	32	60	1	50	22	45	62	7	25	48	45	1
	32	70	1	–	–	–	–	–	–	54	46	1

Axial deep groove ball bearings

Single direction

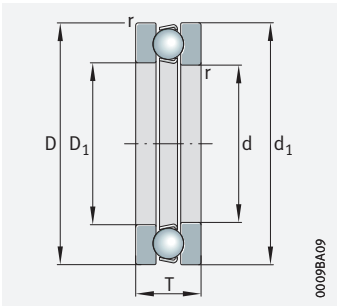

511, 512, 513, 514

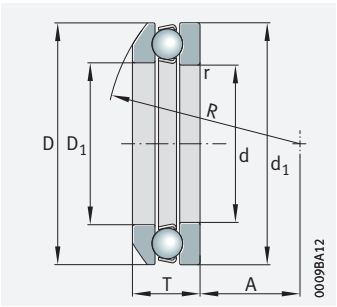

532, 533
Spherical housing locating washer

d = 35 – 55 mm

Main dimensions			Basic load ratings		Fatigue limit load	Minimum load factor	Limiting speed	Speed rating	Mass m		Designation ➤*1014* | *1.12* ➤*1014* | *1.13*	
d	D	T	dyn. C_a N	stat. C_{0a} N	C_{ua} N	A	n_G min^{-1}	$n_{\vartheta r}$ min^{-1}	Bearing ≈ kg	Support washer ≈ kg	Bearing	Support washer
35	52	12	20 000	46 500	2 120	0,011	8 800	6 800	0,089	–	**51107**	**–**
	62	18	35 500	67 000	3 100	0,028	6 000	8 000	0,198	–	**51207**	**–**
	62	19,9	35 500	67 000	3 100	0,028	6 000	8 000	0,265	0,057	**53207**	**U207**
	68	24	50 000	89 000	4 050	0,05	4 850	8 200	0,351	–	**51307**	**–**
	68	25,6	50 000	89 000	4 050	0,05	4 850	8 200	0,437	0,082	**53307**	**U307**
	80	32	76 000	126 000	5 700	0,11	3 600	8 500	0,709	–	**51407**	**–**
40	60	13	25 500	62 000	2 850	0,02	7 400	6 400	0,119	–	**51108**	**–**
	68	19	44 000	97 000	4 400	0,05	5 500	6 900	0,257	–	**51208**	**–**
	68	20,3	44 000	97 000	4 400	0,05	5 500	6 900	0,259	0,07	**53208**	**U208**
	78	26	61 000	112 000	5 100	0,081	4 250	7 600	0,536	–	**51308**	**–**
	78	28,5	61 000	112 000	5 100	0,081	4 250	7 600	0,561	0,114	**53308**	**U308**
	90	36	96 000	170 000	7 700	0,18	3 250	7 600	1,03	–	**51408**	**–**
45	65	14	26 500	69 000	3 100	0,025	7 100	5 800	0,15	–	**51109**	**–**
	73	20	39 000	80 000	3 650	0,043	5 500	6 600	0,279	–	**51209**	**–**
	73	21,3	39 000	80 000	3 650	0,043	5 500	6 600	0,278	0,087	**53209**	**U209**
	85	28	75 000	140 000	6 500	0,12	3 800	6 800	0,612	–	**51309**	**–**
	85	30,1	75 000	140 000	6 500	0,12	3 800	6 800	0,783	0,171	**53309**	**U309**
	100	39	123 000	222 000	10 100	0,29	2 850	6 900	1,36	–	**51409**	**–**
50	70	14	27 000	75 000	3 400	0,029	6 800	5 200	0,162	–	**51110**	**–**
	78	22	50 000	106 000	4 850	0,069	4 950	5 700	0,346	–	**51210**	**–**
	78	23,5	50 000	106 000	4 850	0,069	4 950	5 700	0,341	0,098	**53210**	**U210**
	95	31	82 000	169 000	7 700	0,18	3 550	6 400	0,932	–	**51310**	**–**
	95	34,3	82 000	169 000	7 700	0,18	3 550	6 400	0,97	0,22	**53310**	**U310**
	110	43	138 000	255 000	11 700	0,4	2 650	6 500	1,81	–	**51410**	**–**
55	78	16	30 500	75 000	3 400	0,036	6 100	5 200	0,208	–	**51111**	**–**
	90	25	58 000	133 000	6 000	0,11	4 350	5 700	0,382	–	**51211**	**–**
	90	27,3	58 000	133 000	6 000	0,11	4 350	5 700	0,609	0,152	**53211**	**U211**
	105	35	102 000	207 000	9 500	0,26	3 200	6 000	1,3	–	**51311**	**–**
	105	39,3	102 000	207 000	9 500	0,26	3 200	6 000	1,38	0,27	**53311**	**U311**
	120	48	167 000	315 000	14 400	0,59	2 340	6 000	2,83	–	**51411**	**–**

medias *https://www.schaeffler.de/std/1F9A*

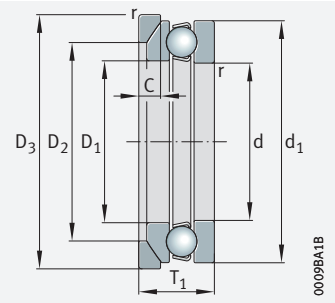

532, 533
Spherical housing locating washer
Support washer U2, U3

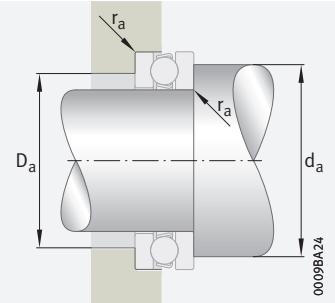

Mounting dimensions

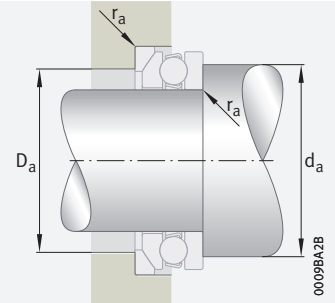

Mounting dimensions

Dimensions										Mounting dimensions		
d	D_1	d_1	r min.	R	A	D_2	D_3	C	T_1	d_a min.	D_a max.	r_a max.
35	37	52	0,6	–	–	–	–	–	–	45	42	0,6
	37	62	1	–	–	–	–	–	–	51	46	1
	37	62	1	50	24	48	65	7	22	51	48	1
	37	68	1	–	–	–	–	–	–	55	48	1
	37	68	1	56	24	52	72	7,5	28	55	52	1
	37	80	1,1	–	–	–	–	–	–	62	53	1
40	42	60	0,6	–	–	–	–	–	–	52	48	0,6
	42	68	1	–	–	–	–	–	–	57	51	1
	42	68	1	56	28,5	55	72	7	23	57	55	1
	42	78	1	–	–	–	–	–	–	63	55	1
	42	78	1	64	28	60	82	8,5	31	63	60	1
	42	90	1,1	–	–	–	–	–	–	70	60	1
45	47	65	0,6	–	–	–	–	–	–	57	53	0,6
	47	73	1	–	–	–	–	–	–	62	56	1
	47	73	1	56	26	60	78	7,5	24	62	60	1
	47	85	1	–	–	–	–	–	–	69	61	1
	47	85	1	64	25	65	90	10	33	69	65	1
	47	100	1,1	–	–	–	–	–	–	78	67	1
50	52	70	0,6	–	–	–	–	–	–	62	58	0,6
	52	78	1	–	–	–	–	–	–	67	61	1
	52	78	1	64	32,5	62	82	7,5	26	67	62	1
	52	95	1,1	–	–	–	–	–	–	77	68	1
	52	95	1,1	72	28	72	100	11	37	77	72	1
	52	110	1,5	–	–	–	–	–	–	86	74	1,5
55	57	78	0,6	–	–	–	–	–	–	69	64	0,6
	57	90	1	–	–	–	–	–	–	76	69	1
	57	90	1	72	35	72	95	9	30	76	72	1
	57	105	1,1	–	–	–	–	–	–	85	75	1
	57	105	1,1	80	30	80	110	11,5	42	85	80	1
	57	120	1,5	–	–	–	–	–	–	94	81	1,5

Axial deep groove ball bearings

Single direction

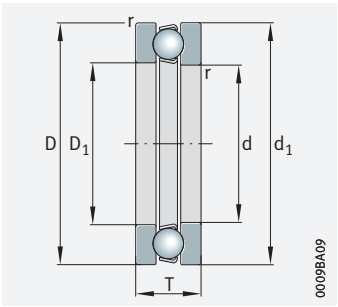

511, 512, 513, 514

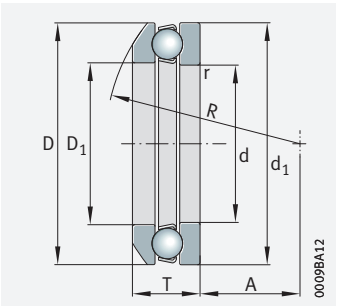

532, 533
Spherical housing locating washer

d = 60 – 80 mm

Main dimensions			Basic load ratings		Fatigue limit load	Minimum load factor	Limiting speed	Speed rating	Mass m		Designation ➤*1014|1.12* ➤*1014|1.13*	
d	D	T	dyn. C_a	stat. C_{0a}	C_{ua}	A	n_G	$n_{\vartheta r}$	Bearing	Support washer	Bearing	Support washer
			N	N	N		min^{-1}	min^{-1}	≈ kg	≈ kg		
60	85	17	41 500	113 000	5 200	0,065	5 500	4 650	0,278	–	**51112**	**–**
	95	26	62 000	139 000	6 300	0,12	4 200	5 300	0,649	–	**51212**	**–**
	95	28	62 000	139 000	6 300	0,12	4 200	5 300	0,655	0,163	**53212**	**U212**
	110	35	101 000	207 000	9 500	0,28	3 150	5 700	1,36	–	**51312**	**–**
	110	38,3	101 000	207 000	9 500	0,28	3 150	5 700	1,41	0,31	**53312**	**U312**
	130	51	201 000	395 000	18 200	0,87	2 190	5 500	3,57	–	**51412-MP**	**–**
65	90	18	38 500	100 000	4 550	0,063	5 300	4 450	0,3	–	**51113**	**–**
	100	27	64 000	149 000	6 800	0,14	4 100	4 900	0,684	–	**51213**	**–**
	100	28,7	64 000	149 000	6 800	0,14	4 100	4 900	0,855	0,183	**53213**	**U213**
	115	36	105 000	220 000	10 000	0,32	3 050	5 300	1,39	–	**51313**	**–**
	115	39,4	105 000	220 000	10 000	0,32	3 050	5 300	1,78	0,34	**53313**	**U313**
	140	56	217 000	450 000	20 500	1,1	2 050	5 200	4,47	–	**51413-MP**	**–**
70	95	18	40 000	110 000	5 000	0,074	5 100	4 100	0,352	–	**51114**	**–**
	105	27	66 000	159 000	7 200	0,16	4 000	4 550	0,727	–	**51214**	**–**
	105	28,8	66 000	159 000	7 200	0,16	4 000	4 550	0,903	0,185	**53214**	**U214**
	125	40	134 000	290 000	13 300	0,51	2 750	4 950	1,9	–	**51314**	**–**
	125	44,2	134 000	290 000	13 300	0,51	2 750	4 950	2,09	0,4	**53314**	**U314**
	150	60	222 000	500 000	21 700	1,4	1 920	5 000	5,49	–	**51414-MP**	**–**
75	100	19	44 500	123 000	5 600	0,093	4 800	3 800	0,365	–	**51115**	**–**
	110	27	67 000	169 000	7 700	0,18	3 950	4 300	0,825	–	**51215**	**–**
	110	28,3	67 000	169 000	7 700	0,18	3 950	4 300	1,01	0,21	**53215**	**U215**
	135	44	163 000	360 000	15 900	0,75	2 480	4 650	2,59	–	**51315**	**–**
	135	48,1	163 000	360 000	15 900	0,75	2 480	4 650	3,19	0,54	**53315**	**U315**
	160	65	238 000	560 000	23 400	1,8	1 810	4 750	6,82	–	**51415-MP**	**–**
80	105	19	45 000	129 000	5 900	0,1	4 650	3 600	0,384	–	**51116**	**–**
	115	28	75 000	191 000	8 800	0,23	3 700	3 950	0,908	–	**51216**	**–**
	115	29,5	75 000	191 000	8 800	0,23	3 700	3 950	0,903	0,22	**53216**	**U216**
	140	44	160 000	360 000	15 500	0,79	2 460	4 450	2,69	–	**51316**	**–**
	140	47,6	160 000	360 000	15 500	0,79	2 460	4 450	2,75	0,56	**53316**	**U316**
	170	68	270 000	620 000	25 500	2,2	1 710	4 550	7,97	–	**51416-MP**	**–**

medias *https://www.schaeffler.de/std/1F9A*

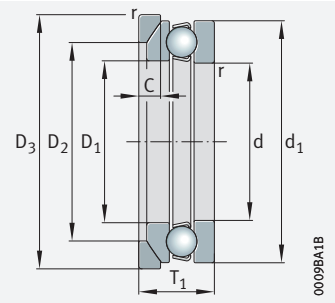

532, 533
Spherical housing locating washer
Support washer U2, U3

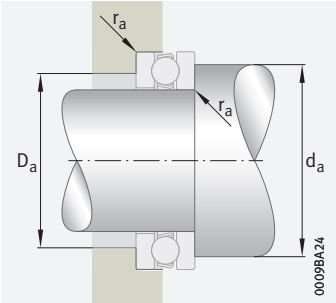

Mounting dimensions

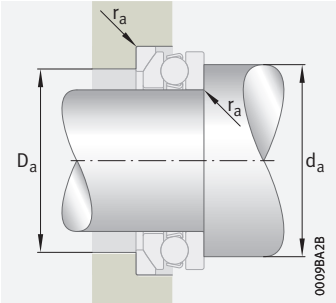

Mounting dimensions

Dimensions										Mounting dimensions		
d	D_1	d_1	r min.	R	A	D_2	D_3	C	T_1	d_a min.	D_a max.	r_a max.
60	62	85	1	–	–	–	–	–	–	75	70	1
	62	95	1	–	–	–	–	–	–	81	74	1
	62	95	1	72	32,5	78	100	9	31	81	78	1
	62	110	1,1	–	–	–	–	–	–	90	80	1
	62	110	1,1	90	41	85	115	11,5	42	90	85	1
	62	130	1,5	–	–	–	–	–	–	102	88	1,5
65	67	90	1	–	–	–	–	–	–	80	75	1
	67	100	1	–	–	–	–	–	–	86	79	1
	67	100	1	80	40	82	105	9	32	86	82	1
	67	115	1,1	–	–	–	–	–	–	95	85	1
	67	115	1,1	90	38,5	90	120	12,5	43	95	90	1
	68	140	2	–	–	–	–	–	–	110	95	2
70	72	95	1	–	–	–	–	–	–	85	80	1
	72	105	1	–	–	–	–	–	–	91	84	1
	72	105	1	80	38	88	110	9	32	91	88	1
	72	125	1,1	–	–	–	–	–	–	103	92	1
	72	125	1,1	100	43	98	130	13	48	103	98	1
	73	150	2	–	–	–	–	–	–	118	102	2
75	77	100	1	–	–	–	–	–	–	90	85	1
	77	110	1	–	–	–	–	–	–	96	89	1
	77	110	1	90	49	92	115	9,5	32	96	92	1
	77	135	1,5	–	–	–	–	–	–	111	99	1,5
	77	135	1,5	100	37	105	140	15	52	111	105	1,5
	78	160	2	–	–	–	–	–	–	126	109	2
80	82	105	1	–	–	–	–	–	–	95	90	1
	82	115	1	–	–	–	–	–	–	101	94	1
	82	115	1	90	46	98	120	10	33	101	98	1
	82	140	1,5	–	–	–	–	–	–	116	104	1,5
	82	140	1,5	112	50	110	145	15	52	116	110	1,5
	83	170	2,1	–	–	–	–	–	–	134	116	2,1

Axial deep groove ball bearings

Single direction

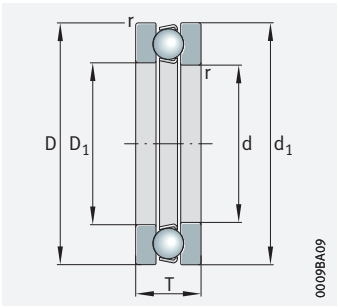

511, 512, 513, 514

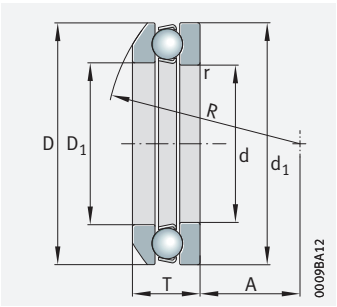

532, 533
Spherical housing locating washer

d = 85 – 120 mm

Main dimensions			Basic load ratings		Fatigue limit load	Minimum load factor	Limiting speed	Speed rating	Mass m		Designation ➤1014|1.12 ➤1014|1.13	
d	D	T	dyn. C_a N	stat. C_{0a} N	C_{ua} N	A	n_G min^{-1}	$n_{\vartheta r}$ min^{-1}	Bearing ≈ kg	Support washer ≈ kg	Bearing	Support washer
85	110	19	45 500	134 000	6 200	0,11	4 500	3 400	0,404	–	**51117**	**–**
	125	31	98 000	250 000	11 200	0,37	3 250	3 850	1,21	–	**51217**	**–**
	125	33,1	98 000	250 000	11 200	0,37	3 250	3 850	1,22	0,29	**53217**	**U217**
	150	49	186 000	420 000	17 700	1,1	2 260	4 250	3,48	–	**51317**	**–**
	150	53,1	186 000	420 000	17 700	1,1	2 260	4 250	3,51	0,8	**53317**	**U317**
	180	72	305 000	750 000	30 000	3	1 620	4 250	9,3	–	**51417-MP**	**–**
90	120	22	45 500	140 000	6 300	0,12	4 300	3 500	0,617	–	**51118**	**–**
	135	35	119 000	300 000	13 000	0,54	2 900	3 750	1,66	–	**51218**	**–**
	135	38,5	119 000	300 000	13 000	0,54	2 900	3 750	1,7	0,42	**53218**	**U218**
	155	50	193 000	455 000	18 800	1,2	2 240	4 050	3,75	–	**51318**	**–**
	155	54,6	193 000	455 000	18 800	1,2	2 240	4 050	3,81	0,82	**53318**	**U318**
	190	77	325 000	830 000	32 000	3,7	1 540	4 100	11,2	–	**51418-MP**	**–**
100	135	25	85 000	270 000	11 300	0,36	3 500	3 100	0,992	–	**51120**	**–**
	150	38	119 000	325 000	13 300	0,68	2 700	3 600	2,21	–	**51220**	**–**
	150	40,9	119 000	325 000	13 300	0,68	2 700	3 600	2,23	0,5	**53220**	**U220**
	170	55	238 000	580 000	23 200	1,9	1 970	3 650	4,94	–	**51320**	**–**
	170	59,2	238 000	580 000	23 200	1,9	1 970	3 650	4,99	0,93	**53320**	**U320**
	210	85	375 000	1 060 000	38 500	6	1 350	3 650	15	–	**51420-MP**	**–**
110	145	25	87 000	290 000	11 600	0,42	3 350	2 800	1,08	–	**51122**	**–**
	160	38	126 000	365 000	14 400	0,83	2 650	3 250	2,28	–	**51222**	**–**
	160	40,2	126 000	365 000	14 400	0,83	2 650	3 250	2,24	0,56	**53222**	**U222**
	190	63	280 000	740 000	28 000	3	1 790	3 400	7,85	–	**51322-MP**	**–**
	190	67,2	280 000	740 000	28 000	3	1 790	3 400	7,85	1,26	**53322-MP**	**U322**
	230	95	405 000	1 130 000	39 500	7,1	1 300	3 400	20	–	**51422-MP**	**–**
120	155	25	89 000	310 000	12 000	0,49	3 200	2 600	1,16	–	**51124**	**–**
	170	39	128 000	385 000	14 600	0,94	2 550	3 000	2,66	–	**51224**	**–**
	170	40,8	128 000	385 000	14 600	0,94	2 550	3 000	2,58	0,65	**53224**	**U224**
	210	70	325 000	910 000	32 500	4,4	1 610	3 200	10,7	–	**51324-MP**	**–**
	210	74,1	325 000	910 000	32 500	4,4	1 610	3 200	10,6	2,01	**53324-MP**	**U324**
	250	102	455 000	1 340 000	45 000	10	1 180	3 050	25,4	–	**51424-MP**	**–**

medias *https://www.schaeffler.de/std/1F9A*

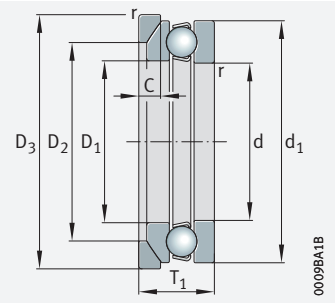

532, 533
Spherical housing locating washer
Support washer U2, U3

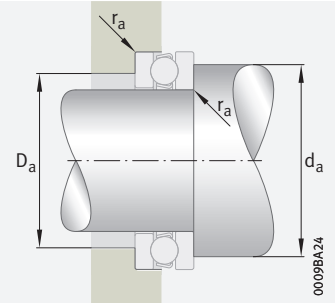

Mounting dimensions

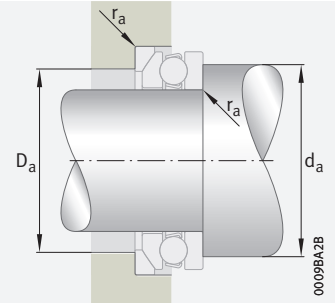

Mounting dimensions

Dimensions										Mounting dimensions		
d	D_1	d_1	r min.	R	A	D_2	D_3	C	T_1	d_a min.	D_a max.	r_a max.
85	87	110	1	–	–	–	–	–	–	100	95	1
	88	125	1	–	–	–	–	–	–	109	101	1
	88	125	1	100	52	105	130	11	37	109	105	1
	88	150	1,5	–	–	–	–	–	–	124	111	1,5
	88	150	1,5	112	43	115	155	17,5	58	124	115	1,5
	88	177	2,1	–	–	–	–	–	–	142	123	2,1
90	92	120	1	–	–	–	–	–	–	108	102	1
	93	135	1,1	–	–	–	–	–	–	117	108	1
	93	135	1,1	100	45	110	140	13,5	42	117	110	1
	93	155	1,5	–	–	–	–	–	–	129	116	1,5
	93	155	1,5	112	40	120	160	18	59	129	120	1,5
	93	187	2,1	–	–	–	–	–	–	150	130	2,1
100	102	135	1	–	–	–	–	–	–	121	114	1
	103	150	1,1	–	–	–	–	–	–	130	120	1
	103	150	1,1	112	52	125	155	14	45	130	125	1
	103	170	1,5	–	–	–	–	–	–	142	128	1,5
	103	170	1,5	125	46	135	175	18	64	142	135	1,5
	103	205	3	–	–	–	–	–	–	166	144	2,5
110	112	145	1	–	–	–	–	–	–	131	124	1
	113	160	1,1	–	–	–	–	–	–	140	130	1
	113	160	1,1	125	65	135	165	14	45	140	135	1
	113	187	2	–	–	–	–	–	–	158	142	2
	113	187	2	140	51	150	195	20,5	72	158	150	2
	113	225	3	–	–	–	–	–	–	182	158	2,5
120	122	155	1	–	–	–	–	–	–	141	134	1
	123	170	1,1	–	–	–	–	–	–	150	140	1
	123	170	1,1	125	61	145	175	15	46	150	145	1
	123	205	2,1	–	–	–	–	–	–	174	156	2,1
	123	205	2,1	160	63	165	220	22	80	174	165	2,1
	123	245	4	–	–	–	–	–	–	198	172	3

Axial deep groove ball bearings

Single direction

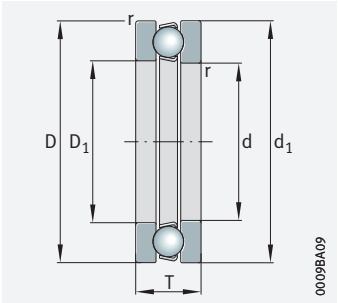

511, 512, 513, 514

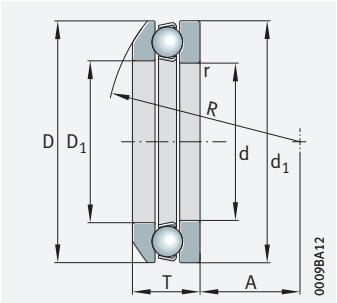

532, 533
Spherical housing locating washer

d = 130 – 180 mm

Main dimensions			Basic load ratings		Fatigue limit load	Minimum load factor	Limiting speed	Speed rating	Mass m		Designation ➤*1014|1.12* ➤*1014|1.13*	
d	D	T	dyn. C_a	stat. C_{0a}	C_{ua}	A	n_G	$n_{\vartheta r}$	Bearing	Support washer	Bearing	Support washer
			N	N	N		min^{-1}	min^{-1}	≈ kg	≈ kg		
130	170	30	111 000	390 000	14 600	0,76	2 850	2 490	1,75	–	**51126**	**–**
	190	45	184 000	540 000	19 500	1,7	2 210	2 850	3,96	–	**51226**	**–**
	190	47,9	184 000	540 000	19 500	1,7	2 210	2 850	3,9	0,9	**53226**	**U226**
	225	75	360 000	1 050 000	36 000	5,9	1 490	2 950	13	–	**51326-MP**	**–**
	270	110	560 000	1 750 000	57 000	16	1 030	2 650	32	–	**51426-MP**	**–**
140	180	31	111 000	400 000	14 600	0,83	2 750	2 330	1,9	–	**51128**	**–**
	200	46	191 000	570 000	19 800	1,9	2 110	2 700	4,3	–	**51228**	**–**
	200	48,6	191 000	570 000	19 800	1,9	2 110	2 700	4,25	1,22	**53228**	**U228**
	240	80	385 000	1 240 000	41 000	8,2	1 360	2 700	15,6	–	**51328-MP**	**–**
	240	84,9	385 000	1 240 000	41 000	8,2	1 360	2 700	15,5	2,92	**53328-MP**	**U328**
150	190	31	109 000	400 000	14 200	0,89	2 650	2 200	2,17	–	**51130-MP**	**–**
	215	50	236 000	730 000	24 900	2,9	1 950	2 500	6,08	–	**51230-MP**	**–**
	215	53,3	236 000	730 000	24 900	2,9	1 950	2 500	5,95	1,69	**53230-MP**	**U230**
	250	80	395 000	1 330 000	43 000	9,3	1 340	2 480	16,2	–	**51330-MP**	**–**
	250	83,7	395 000	1 330 000	43 000	9,3	1 340	2 480	12,8	3,11	**53330-MP**	**U330**
160	200	31	112 000	425 000	14 600	1	2 550	2 060	2,29	–	**51132-MP**	**–**
	225	51	240 000	770 000	25 500	3,2	1 900	2 350	6,53	–	**51232-MP**	**–**
	225	54,7	240 000	770 000	25 500	3,2	1 900	2 350	6,45	1,8	**53232-MP**	**U232**
	270	87	445 000	1 560 000	48 500	13	1 230	2 280	21,2	–	**51332-MP**	**–**
	270	91,7	445 000	1 560 000	48 500	13	1 230	2 280	20,8	4	**53332-MP**	**U332**
170	215	34	127 000	510 000	16 700	1,4	2 330	2 010	3,02	–	**51134-MP**	**–**
	240	55	285 000	930 000	29 500	4,5	1 740	2 230	8,12	–	**51234-MP**	**–**
	240	58,7	285 000	930 000	29 500	4,5	1 740	2 230	7,91	2,14	**53234-MP**	**U234**
	280	87	440 000	1 560 000	47 500	13	1 220	2 170	22,2	–	**51334-MP**	**–**
	280	91,3	440 000	1 560 000	47 500	13	1 220	2 170	21,6	4,42	**53334-MP**	**U334**
180	225	34	127 000	520 000	16 800	1,5	2 250	1 910	3,06	–	**51136-MP**	**–**
	250	56	305 000	1 030 000	32 500	5,4	1 670	2 080	8,56	–	**51236-MP**	**–**
	250	58,2	305 000	1 030 000	32 500	5,4	1 670	2 080	8,19	2,33	**53236-MP**	**U236**
	300	95	520 000	1 830 000	54 000	18	1 130	2 000	24,8	–	**51336-MP**	**–**
	300	99,3	520 000	1 830 000	54 000	18	1 130	2 000	24,1	5,32	**53336-MP**	**U336**

medias *https://www.schaeffler.de/std/1F9A*

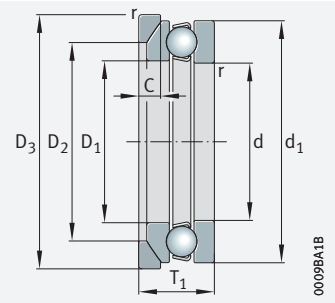

532, 533
Spherical housing locating washer
Support washer U2, U3

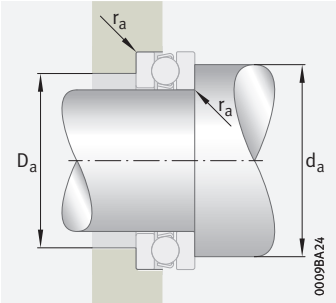

Mounting dimensions

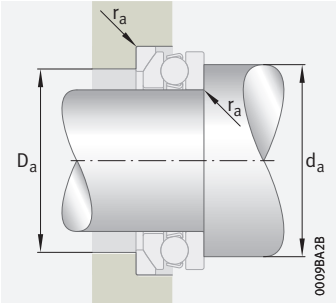

Mounting dimensions

Dimensions										Mounting dimensions		
d	D_1	d_1	r min.	R	A	D_2	D_3	C	T_1	d_a min.	D_a max.	r_a max.
130	132	170	1	–	–	–	–	–	–	154	146	1
	133	187	1,5	–	–	–	–	–	–	166	154	1,5
	133	187	1,5	140	67	160	195	17	53	166	160	1,5
	134	220	2,1	–	–	–	–	–	–	187	168	2,1
	134	265	4	–	–	–	–	–	–	214	186	3
140	142	178	1	–	–	–	–	–	–	164	156	1
	143	197	1,5	–	–	–	–	–	–	176	164	1,5
	143	197	1,5	160	87	170	210	17	55	176	170	1,5
	144	235	2,1	–	–	–	–	–	–	200	180	2,1
	144	235	2,1	180	68	190	250	26	92	200	190	2,1
150	152	188	1	–	–	–	–	–	–	174	166	1
	153	212	1,5	–	–	–	–	–	–	189	176	1,5
	153	212	1,5	160	79	180	225	20,5	60	189	180	1,5
	154	245	2,1	–	–	–	–	–	–	210	190	2,1
	154	245	2,1	200	89,5	200	260	26	92	210	200	2,1
160	162	198	1	–	–	–	–	–	–	184	176	1
	163	222	1,5	–	–	–	–	–	–	199	186	1,5
	163	222	1,5	160	74	190	235	21	61	199	190	1,5
	164	265	3	–	–	–	–	–	–	226	204	2,5
	164	265	3	200	77	215	280	29	100	226	215	2,5
170	172	213	1,1	–	–	–	–	–	–	197	188	1
	173	237	1,5	–	–	–	–	–	–	212	198	1,5
	173	237	1,5	180	91	200	250	21,5	65	212	200	1,5
	174	275	3	–	–	–	–	–	–	236	214	2,5
	174	275	3	225	105	220	290	29	100	236	220	2,5
180	183	222	1,1	–	–	–	–	–	–	207	198	1
	183	245	1,5	–	–	–	–	–	–	222	208	1,5
	183	245	1,5	200	112	210	260	21,5	66	222	210	1,5
	184	295	3	–	–	–	–	–	–	252	228	2,5
	184	295	3	225	91	240	310	32	109	252	240	2,5

Axial deep groove ball bearings

Single direction

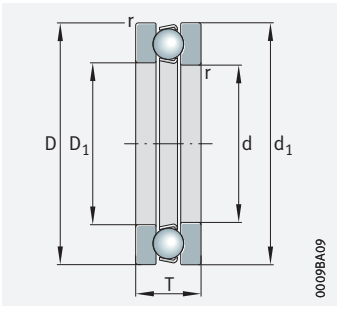

511, 512, 513

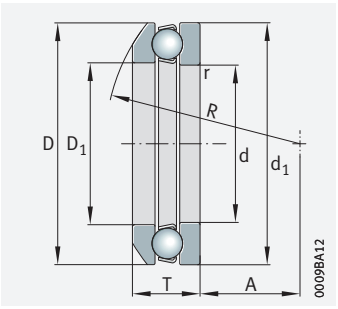

532, 533
Spherical housing locating washer

d = 190 – 260 mm

Main dimensions			Basic load ratings		Fatigue limit load	Minimum load factor	Limiting speed	Speed rating	Mass m		Designation ➤1014|1.12 ➤1014|1.13	
d	D	T	dyn. C_a	stat. C_{0a}	C_{ua}	A	n_G	$n_{\vartheta r}$	Bearing	Support washer	Bearing	Support washer
			N	N	N		min^{-1}	min^{-1}	≈ kg	≈ kg		
190	240	37	161 000	650 000	20 200	2,3	2 040	1 850	4,06	–	**51138-MP**	**–**
	270	62	335 000	1 170 000	35 500	7,2	1 540	2 010	11,6	–	**51238-MP**	**–**
	270	65,7	335 000	1 170 000	35 500	7,2	1 540	2 010	11,5	2,63	**53238-MP**	**U238**
	320	105	590 000	2 170 000	63 000	24	1 040	1 840	36,7	–	**51338-MP**	**–**
	320	111	590 000	2 170 000	63 000	24	1 040	1 840	36,5	6,16	**53338-MP**	**U338**
200	250	37	162 000	670 000	20 400	2,5	1 980	1 760	4,12	–	**51140-MP**	**–**
	280	62	340 000	1 220 000	36 000	7,8	1 510	1 890	12	–	**51240-MP**	**–**
	280	65,3	340 000	1 220 000	36 000	7,8	1 510	1 890	11,8	2,79	**53240-MP**	**U240**
220	270	37	168 000	730 000	21 300	3	1 870	1 600	4,54	–	**51144-MP**	**–**
	300	63	335 000	1 330 000	37 500	9,6	1 420	1 690	13,1	–	**51244-MP**	**–**
	300	65,6	335 000	1 330 000	37 500	9,6	1 420	1 690	13,1	3,31	**53244-MP**	**U244**
240	300	45	237 000	990 000	27 500	5,2	1 640	1 540	7,41	–	**51148-MP**	**–**
260	320	45	245 000	1 070 000	29 000	6,1	1 560	1 390	7,89	–	**51152-MP**	**–**

medias *https://www.schaeffler.de/std/1F9A*

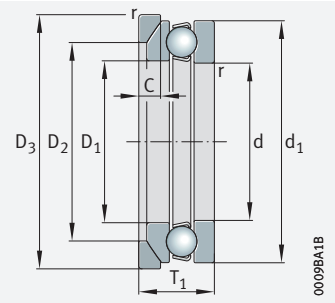

532, 533
Spherical housing locating washer
Support washer U2, U3

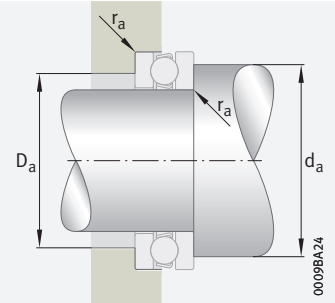

Mounting dimensions

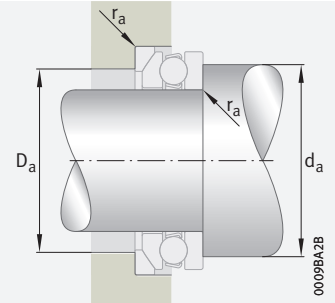

Mounting dimensions

Dimensions										Mounting dimensions		
d	D_1	d_1	r min.	R	A	D_2	D_3	C	T_1	d_a min.	D_a max.	r_a max.
190	193	237	1,1	–	–	–	–	–	–	220	210	1
	194	265	2	–	–	–	–	–	–	238	222	2
	195	265	2	200	98	230	280	23	73	238	230	2
	195	315	4	–	–	–	–	–	–	268	242	3
	195	315	4	250	104	255	330	33	121	268	255	3
200	203	247	1,1	–	–	–	–	–	–	230	220	1
	204	275	2	–	–	–	–	–	–	248	232	2
	204	275	2	225	125	240	290	23	74	248	240	2
220	223	267	1,1	–	–	–	–	–	–	250	240	1
	224	295	2	–	–	–	–	–	–	268	252	2
	224	295	2	225	118	260	310	25	75	268	260	2
240	243	297	1,5	–	–	–	–	–	–	276	264	1,5
260	263	317	1,5	–	–	–	–	–	–	296	284	1,5

Axial deep groove ball bearings

Double direction

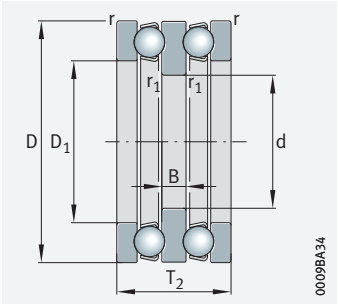

522, 523

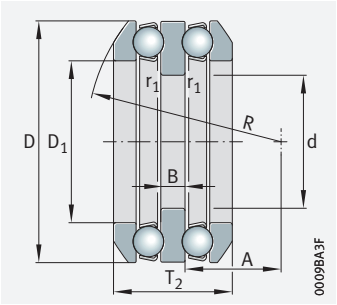

542, 543
Spherical housing locating washers

d = 10 – 40 mm

Main dimensions			Basic load ratings		Fatigue limit load	Minimum load factor	Limiting speed	Speed rating	Mass m		Designation ➤1014|1.12 ➤1014|1.13	
d	D	T_2	dyn. C_a	stat. C_{0a}	C_{ua}	A	n_G	$n_{\vartheta r}$	Bearing	Support washer	Bearing	Support washer
			N	N	N		min^{-1}	min^{-1}	≈ kg	≈ kg		
10	32	22	16 600	24 800	1 130	0,003	9 800	13 700	0,085	–	**52202**	**–**
15	40	26	21 100	37 500	1 700	0,007	8 500	11 100	0,15	–	**52204**	**–**
20	47	28	26 500	50 000	2 280	0,013	7 500	9 400	0,23	–	**52205**	**–**
	47	31,4	26 500	50 000	2 280	0,013	7 500	9 400	0,221	0,031	**54205**	**U205**
	52	34	34 500	55 000	2 500	0,019	6 000	9 700	0,29	–	**52305**	**–**
	52	37,6	34 500	55 000	2 500	0,019	6 000	9 700	0,303	0,043	**54305**	**U305**
	70	52	70 000	112 000	5 200	0,077	3 850	8 700	0,912	–	**52406**	**–**
25	52	29	23 900	46 000	2 100	0,014	7 300	8 200	0,249	–	**52206**	**–**
	52	32,6	23 900	46 000	2 100	0,014	7 300	8 200	0,269	0,032	**54206**	**U206**
	60	38	35 500	65 000	2 950	0,028	5 700	8 600	0,435	–	**52306**	**–**
	60	41,2	35 500	65 000	2 950	0,028	5 700	8 600	0,553	0,055	**54306**	**U306**
	80	59	76 000	126 000	5 700	0,11	3 600	8 000	1,44	–	**52407**	**–**
30	62	34	35 500	67 000	3 100	0,028	6 000	7 500	0,405	–	**52207**	**–**
	62	37,8	35 500	67 000	3 100	0,028	6 000	7 500	0,423	0,082	**54207**	**U207**
	68	36	44 000	97 000	4 400	0,05	5 500	6 900	0,54	–	**52208**	**–**
	68	44	50 000	89 000	4 050	0,05	4 850	7 600	0,63	–	**52307**	**–**
	68	38,6	44 000	97 000	4 400	0,05	5 500	6 900	0,513	0,07	**54208**	**U208**
	68	47,2	50 000	89 000	4 050	0,05	4 850	7 600	0,683	0,082	**54307**	**U307**
	78	49	61 000	112 000	5 100	0,081	4 250	7 200	1,02	–	**52308**	**–**
	78	54	61 000	112 000	5 100	0,081	4 250	7 200	1,1	0,114	**54308**	**U308**
	90	65	96 000	170 000	7 700	0,18	3 250	7 100	2,03	–	**52408**	**–**
35	73	37	39 000	80 000	3 650	0,043	5 500	6 500	0,58	–	**52209**	**–**
	73	39,6	39 000	80 000	3 650	0,043	5 500	6 500	0,537	0,087	**54209**	**U209**
	85	52	75 000	140 000	6 500	0,12	3 800	6 500	1,24	–	**52309**	**–**
	85	56,2	75 000	140 000	6 500	0,12	3 800	6 500	1,28	0,171	**54309**	**U309**
	100	72	123 000	222 000	10 100	0,29	2 850	6 500	2,71	–	**52409**	**–**
40	78	39	50 000	106 000	4 850	0,069	4 950	5 800	0,684	–	**52210**	**–**
	78	42	50 000	106 000	4 850	0,069	4 950	5 800	0,625	0,098	**54210**	**U210**
	95	58	82 000	169 000	7 700	0,18	3 550	6 100	1,76	–	**52310**	**–**
	95	64,6	82 000	169 000	7 700	0,18	3 550	6 100	1,84	0,22	**54310**	**U310**
	110	78	138 000	255 000	11 700	0,4	2 650	6 000	3,56	–	**52410**	**–**

medias *https://www.schaeffler.de/std/1F9A*

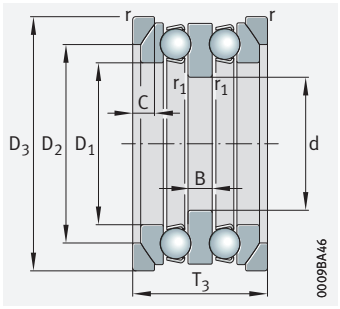

542, 543
Spherical housing locating washers
Support washers U2, U3

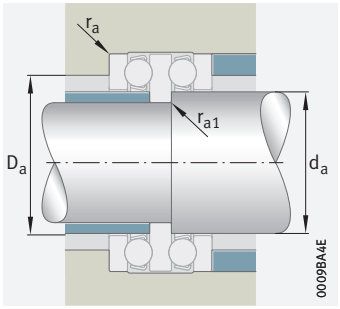

Mounting dimensions

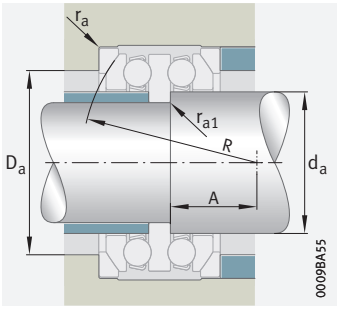

Mounting dimensions

Dimensions											Mounting dimensions			
d	D_1	B	r min.	r_1 min.	R	A	D_2	D_3	C	T_3	d_a	D_a max.	r_a max.	r_{a1} max.
10	17	5	0,6	0,3	–	–	–	–	–	–	15	22	0,6	0,3
15	22	6	0,6	0,3	–	–	–	–	–	–	20	28	0,6	0,3
20	27	7	0,6	0,3	–	–	–	–	–	–	25	34	0,6	0,3
	27	7	0,6	0,3	40	16,5	36	50	5,5	36	25	36	0,6	0,3
	27	8	1	0,3	–	–	–	–	–	–	25	36	1	0,3
	27	8	1	0,3	45	18	42	55	6	38	25	38	1	0,3
	32	12	1	0,6	–	–	–	–	–	–	30	46	1	0,6
25	32	7	0,6	0,3	–	–	–	–	–	–	30	39	0,6	0,3
	32	7	0,6	0,3	45	20	37	55	5,5	42	30	42	0,6	0,3
	32	9	1	0,3	–	–	–	–	–	–	30	42	1	0,3
	32	9	1	0,3	50	19,5	46	62	7	45	30	45	1	0,3
	37	14	1,1	0,6	–	–	–	–	–	–	35	53	1	0,6
30	37	8	1	0,3	–	–	–	–	–	–	35	46	1	0,3
	37	8	1	0,3	50	21	42	72	7,5	52	35	48	1	0,3
	42	9	1	0,6	–	–	–	–	–	–	40	51	1	0,6
	37	10	1	0,3	–	–	–	–	–	–	35	48	1	0,3
	42	9	1	0,6	56	25	44	72	7	55	40	55	1	0,6
	37	10	1	0,3	56	21	52	72	7,5	52	35	52	1	0,3
	42	12	1	0,6	–	–	–	–	–	–	40	55	1	0,6
	42	12	1	0,6	64	23,5	59	82	8,5	60	40	60	1	0,6
	42	15	1,1	0,6	–	–	–	–	–	–	40	60	1	0,6
35	47	9	1	0,6	–	–	–	–	–	–	45	56	1	0,6
	47	9	1	0,6	56	23	45	78	7,5	60	45	60	1	0,6
	47	12	1	0,6	–	–	–	–	–	–	45	61	1	0,6
	47	12	1	0,6	64	21	62	90	10	65	45	65	1	0,6
	47	17	1,1	0,6	–	–	–	–	–	–	45	67	1	0,6
40	52	9	1	0,6	–	–	–	–	–	–	50	61	1	0,6
	52	9	1	0,6	64	30,5	47	82	7,5	62	50	62	1	0,6
	52	14	1,1	0,6	–	–	–	–	–	–	50	68	1	0,6
	52	14	1,1	0,6	72	23	70	100	11	72	50	72	1	0,6
	52	18	1,5	0,6	–	–	–	–	–	–	50	74	1,5	0,6

Axial deep groove ball bearings

Double direction

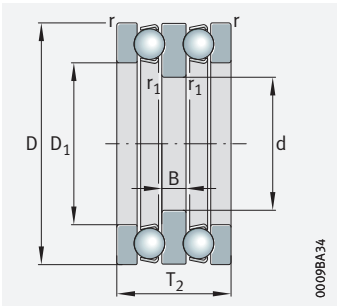

522, 523

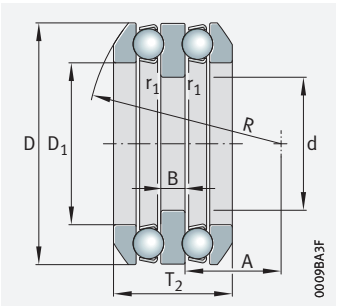

542, 543
Spherical housing locating washers

d = 45 – 70 mm

Main dimensions			Basic load ratings		Fatigue limit load	Minimum load factor	Limiting speed	Speed rating	Mass m		Designation ➤1014|1.12 ➤1014|1.13	
d	D	T_2	dyn. C_a	stat. C_{0a}	C_{ua}	A	n_G	$n_{\vartheta r}$	Bearing	Support washer	Bearing	Support washer
			N	N	N		min^{-1}	min^{-1}	≈ kg	≈ kg		
45	90	45	58 000	133 000	6 000	0,11	4 350	5 600	1,05	–	**52211**	**–**
	90	49,6	58 000	133 000	6 000	0,11	4 350	5 600	1,02	0,152	**54211**	**U211**
	105	64	102 000	207 000	9 500	0,26	3 200	5 700	2,37	–	**52311**	**–**
	105	72,6	102 000	207 000	9 500	0,26	3 200	5 700	2,53	0,27	**54311**	**U311**
	120	87	167 000	315 000	14 400	0,59	2 340	5 600	4,7	–	**52411**	**–**
50	95	46	62 000	139 000	6 300	0,12	4 200	5 200	1,1	–	**52212**	**–**
	95	50	62 000	139 000	6 300	0,12	4 200	5 200	1,17	0,163	**54212**	**U212**
	110	64	101 000	207 000	9 500	0,28	3 150	5 400	2,49	–	**52312**	**–**
	110	70,6	101 000	207 000	9 500	0,28	3 150	5 400	2,59	0,31	**54312**	**U312**
	115	70,6	101 000	207 000	9 500	0,28	3 150	5 800	2,98	0,34	**54313**	**U313**
55	100	47	64 000	149 000	6 800	0,14	4 100	4 800	1,28	–	**52213**	**–**
	100	50,4	64 000	149 000	6 800	0,14	4 100	4 800	1,53	0,183	**54213**	**U213**
	105	47	66 000	159 000	7 200	0,16	4 000	4 750	1,4	–	**52214**	**–**
	105	50,6	66 000	159 000	7 200	0,16	4 000	4 750	1,46	0,185	**54214**	**U214**
	115	65	105 000	220 000	10 000	0,32	3 050	5 000	2,68	–	**52313**	**–**
	125	72	134 000	290 000	13 300	0,51	2 750	4 800	3,55	–	**52314**	**–**
	125	80,4	134 000	290 000	13 300	0,51	2 750	4 800	3,77	0,4	**54314**	**U314**
60	110	47	67 000	169 000	7 700	0,18	3 950	4 450	1,45	–	**52215**	**–**
	110	49,6	67 000	169 000	7 700	0,18	3 950	4 450	1,87	0,21	**54215**	**U215**
	135	79	163 000	360 000	15 900	0,75	2 480	4 500	4,72	–	**52315**	**–**
	135	87,2	163 000	360 000	15 900	0,75	2 480	4 500	4,98	0,54	**54315**	**U315**
65	115	48	75 000	191 000	8 800	0,23	3 700	4 150	1,55	–	**52216**	**–**
	115	51	75 000	191 000	8 800	0,23	3 700	4 150	1,6	0,22	**54216**	**U216**
	140	79	160 000	360 000	15 500	0,79	2 460	4 350	4,82	–	**52316**	**–**
	140	86,2	160 000	360 000	15 500	0,79	2 460	4 350	5,22	0,56	**54316**	**U316**
70	125	55	98 000	250 000	11 200	0,37	3 250	3 950	2,23	–	**52217**	**–**
	125	59,2	98 000	250 000	11 200	0,37	3 250	3 950	2,25	0,29	**54217**	**U217**
	150	87	186 000	420 000	17 700	1,1	2 260	4 150	6,2	–	**52317**	**–**
	150	95,2	186 000	420 000	17 700	1,1	2 260	4 150	6,41	0,8	**54317**	**U317**

medias *https://www.schaeffler.de/std/1F9A*

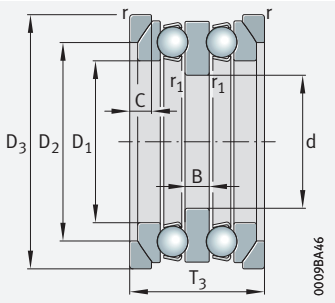

542, 543
Spherical housing locating washers
Support washers U2, U3

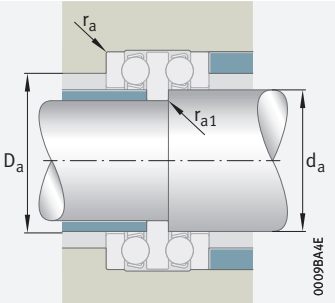

Mounting dimensions

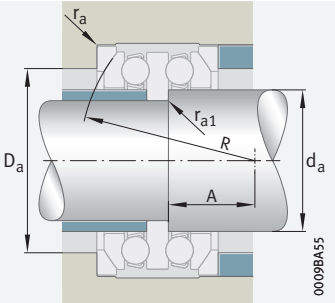

Mounting dimensions

Dimensions											Mounting dimensions			
d	D_1	B	r min.	r_1 min.	R	A	D_2	D_3	C	T_3	d_a	D_a max.	r_a max.	r_{a1} max.
45	57	10	1	0,6	–	–	–	–	–	–	55	69	1	0,6
	57	10	1	0,6	72	32,5	55	95	9	72	55	72	1	0,6
	57	15	1,1	0,6	–	–	–	–	–	–	55	75	1	0,6
	57	15	1,1	0,6	80	25,5	78	110	11,5	80	55	80	1	0,6
	57	20	1,5	0,6	–	–	–	–	–	–	55	81	1,5	0,6
50	62	10	1	0,6	–	–	–	–	–	–	60	74	1	0,6
	62	10	1	0,6	72	30,5	56	100	9	78	60	78	1	0,6
	62	15	1,1	0,6	–	–	–	–	–	–	60	80	1	0,6
	62	15	1,1	0,6	90	36,5	78	115	11,5	85	60	85	1	0,6
	67	15	1,1	0,6	90	34,5	79	120	12,5	90	60	85	1	0,6
55	67	10	1	0,6	–	–	–	–	–	–	65	79	1	0,6
	67	10	1	0,6	80	38,5	57	105	9	82	65	82	1	0,6
	72	10	1	1	–	–	–	–	–	–	70	84	1	1
	72	10	1	1	80	36,5	57	110	9	88	70	88	1	1
	67	15	1,1	0,6	–	–	–	–	–	–	65	85	1	0,6
	72	16	1,1	1	–	–	–	–	–	–	70	92	1	1
	72	16	1,1	1	100	39	88	130	13	98	70	98	1	1
60	77	10	1	1	–	–	–	–	–	–	75	89	1	1
	77	10	1	1	90	47,5	57	115	9,5	92	75	92	1	1
	77	18	1,5	1	–	–	–	–	–	–	75	99	1,5	1
	77	18	1,5	1	100	32,5	95	140	15	105	75	105	1,5	1
65	82	10	1	1	–	–	–	–	–	–	80	94	1	1
	82	10	1	1	90	45	58	120	10	98	80	98	1	1
	82	18	1,5	1	–	–	–	–	–	–	80	104	1,5	1
	82	18	1,5	1	112	45,5	95	145	15	110	80	110	1,5	1
70	88	12	1	1	–	–	–	–	–	–	85	101	1	1
	88	12	1	1	100	49,5	67	130	11	105	85	105	1	1
	88	19	1,5	1	–	–	–	–	–	–	85	111	1,5	1
	88	19	1,5	1	112	39	105	155	17,5	115	85	115	1,5	1

Axial deep groove ball bearings

Double direction

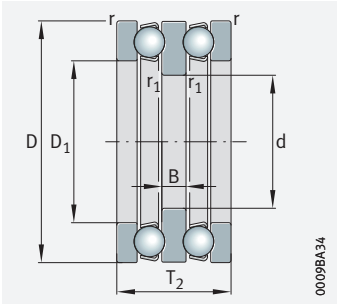

522, 523

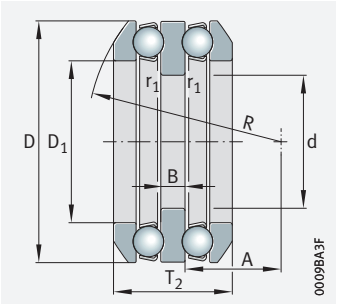

542, 543
Spherical housing locating washers

d = 75 – 130 mm

Main dimensions			Basic load ratings		Fatigue limit load	Minimum load factor	Limiting speed	Speed rating	Mass m		Designation ➤1014|1.12 ➤1014|1.13	
d	D	T_2	dyn. C_a	stat. C_{0a}	C_{ua}	A	n_G	$n_{\vartheta r}$	Bearing	Support washer	Bearing	Support washer
			N	N	N		min^{-1}	min^{-1}	≈ kg	≈ kg		
75	135	62	119 000	300 000	13 000	0,54	2 900	3 800	3,05	–	**52218**	**–**
	135	69	119 000	300 000	13 000	0,54	2 900	3 800	3,11	0,42	**54218**	**U218**
	155	88	193 000	455 000	18 800	1,2	2 240	3 900	6,62	–	**52318**	**–**
	155	97,2	193 000	455 000	18 800	1,2	2 240	3 900	6,76	0,82	**54318**	**U318**
85	150	67	119 000	325 000	13 300	0,68	2 700	3 550	3,95	–	**52220**	**–**
	150	72,8	119 000	325 000	13 300	0,68	2 700	3 550	3,87	0,5	**54220**	**U220**
	170	97	238 000	580 000	23 200	1,9	1 970	3 550	8,71	–	**52320**	**–**
	170	105,4	238 000	580 000	23 200	1,9	1 970	3 550	8,93	0,93	**54320**	**U320**
95	160	67	126 000	365 000	14 400	0,83	2 650	3 250	4,06	–	**52222**	**–**
	160	71,4	126 000	365 000	14 400	0,83	2 650	3 250	4,55	0,56	**54222**	**U222**
	190	110	280 000	740 000	28 000	3	1 790	3 300	14	–	**52322-MP**	**–**
	190	118,4	280 000	740 000	28 000	3	1 790	3 300	13,7	1,26	**54322-MP**	**U322**
100	170	68	128 000	385 000	14 600	0,94	2 550	3 100	4,82	–	**52224**	**–**
	170	71,6	128 000	385 000	14 600	0,94	2 550	3 100	4,66	0,65	**54224**	**U224**
	210	123	325 000	910 000	32 500	4,4	1 610	3 100	19,3	–	**52324-MP**	**–**
	210	131,2	325 000	910 000	32 500	4,4	1 610	3 100	18,8	2,01	**54324-MP**	**U324**
110	190	80	184 000	540 000	19 500	1,7	2 210	2 950	7,26	–	**52226**	**–**
	190	85,8	184 000	540 000	19 500	1,7	2 210	2 950	7,51	0,9	**54226**	**U226**
120	200	81	191 000	570 000	19 800	1,9	2 110	2 750	7,9	–	**52228**	**–**
	200	86,2	191 000	570 000	19 800	1,9	2 110	2 750	16,9	1,22	**54228**	**U228**
	240	140	385 000	1 240 000	41 000	8,2	1 360	2 550	28,3	–	**52328-MP**	**–**
130	215	89	236 000	730 000	24 900	2,9	1 950	2 550	11,46	–	**52230-MP**	**–**
	215	95,6	236 000	730 000	24 900	2,9	1 950	2 550	10,4	1,69	**54230-MP**	**U230**
	250	140	395 000	1 330 000	43 000	9,3	1 340	2 360	29,4	–	**52330-MP**	**–**

medias *https://www.schaeffler.de/std/1F9A*

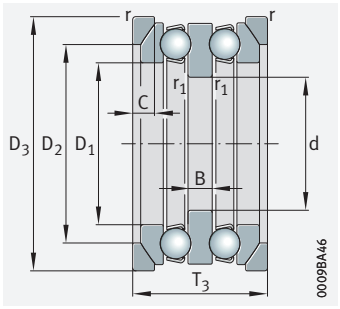

542, 543
Spherical housing locating washers
Support washers U2, U3

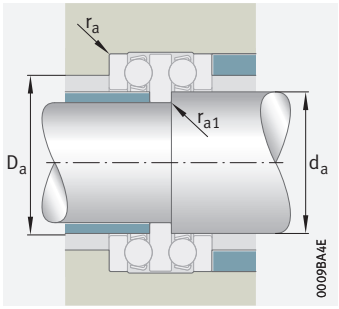

Mounting dimensions

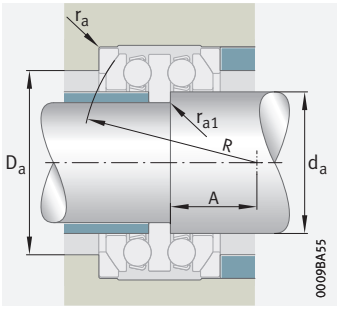

Mounting dimensions

Dimensions											Mounting dimensions			
d	D_1	B	r min.	r_1 min.	R	A	D_2	D_3	C	T_3	d_a	D_a max.	r_a max.	r_{a1} max.
75	93	14	1,1	1	–	–	–	–	–	–	90	108	1	1
	93	14	1,1	1	100	42	76	140	13,5	110	90	110	1	1
	93	19	1,5	1	–	–	–	–	–	–	90	116	1,5	1
	93	19	1,5	1	112	36,5	106	160	18	120	90	120	1,5	1
85	103	15	1,1	1	–	–	–	–	–	–	100	120	1	1
	103	15	1,1	1	112	49	81	155	14	125	100	125	1	1
	103	21	1,5	1	–	–	–	–	–	–	100	128	1,5	1
	103	21	1,5	1	125	42	115	175	18	135	100	135	1,5	1
95	113	15	1,1	1	–	–	–	–	–	–	110	130	1	1
	113	15	1,1	1	125	62	81	165	14	135	110	135	1	1
	113	24	2	1	–	–	–	–	–	–	110	142	2	1
	113	24	2	1	140	47	128	195	20,5	150	110	150	2	1
100	123	15	1,1	1,1	–	–	–	–	–	–	120	140	1	1
	123	15	1,1	1,1	125	58,5	82	175	15	145	120	145	1	1
	123	27	2,1	1,1	–	–	–	–	–	–	120	156	2,1	1
	123	27	2,1	1,1	160	58	143	220	22	165	120	165	2,1	1
110	133	18	1,5	1,1	–	–	–	–	–	–	130	154	1,5	1
	133	18	1,5	1,1	140	63	96	195	17	160	130	160	1,5	1
120	143	18	1,5	1,1	–	–	–	–	–	–	140	164	1,5	1
	143	18	1,5	1,1	160	83,5	99	210	17	170	140	170	1,5	1
	144	31	2,1	1,1	–	–	–	–	–	–	140	180	2,1	1
130	153	20	1,5	1,1	–	–	–	–	–	–	150	176	1,5	1
	153	20	1,5	1,1	160	74,5	109	225	20,5	180	150	180	1,5	1
	154	31	2,1	1,1	–	–	–	–	–	–	150	190	2,1	1

Axial deep groove ball bearings

Double direction

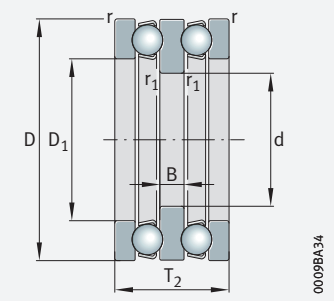

522, 523

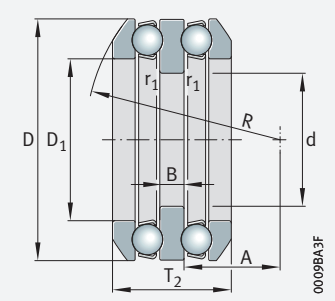

542
Spherical housing locating washers

d = 140 – 190 mm

Main dimensions			Basic load ratings		Fatigue limit load	Minimum load factor	Limiting speed	Speed rating	Mass m		Designation ➤1014|1.12 ➤1014|1.13	
d	D	T_2	dyn. C_a	stat. C_{0a}	C_{ua}	A	n_G	$n_{\vartheta r}$	Bearing	Support washer	Bearing	Support washer
			N	N	N		min^{-1}	min^{-1}	≈ kg	≈ kg		
140	225	90	240 000	770 000	25 500	3,2	1 900	2 400	12,2	–	**52232-MP**	**–**
	225	97,4	240 000	770 000	25 500	3,2	1 900	2 400	11,2	1,8	**54232-MP**	**U232**
	270	153	445 000	1 560 000	48 500	13	1 230	2 160	38,2	–	**52332-MP**	**–**
150	240	97	285 000	930 000	29 500	4,5	1 740	2 210	14	–	**52234-MP**	**–**
	240	104,4	285 000	930 000	29 500	4,5	1 740	2 210	13,6	2,14	**54234-MP**	**U234**
	250	98	305 000	1 030 000	32 500	5,4	1 670	2 120	16,2	–	**52236-MP**	**–**
	250	102,4	305 000	1 030 000	32 500	5,4	1 670	2 120	15,5	2,33	**54236-MP**	**U236**
	280	153	440 000	1 560 000	47 500	13	1 220	2 060	39,9	–	**52334-MP**	**–**
160	270	109	335 000	1 170 000	35 500	7,2	1 540	1 990	21,9	–	**52238-MP**	**–**
	270	116,4	335 000	1 170 000	35 500	7,2	1 540	1 990	20	2,63	**54238-MP**	**U238**
	320	183	590 000	2 170 000	63 000	24	1 040	1 770	66,4	–	**52338-MP**	**–**
170	280	109	340 000	1 220 000	36 000	7,8	1 510	1 880	23,2	–	**52240-MP**	**–**
	280	115,6	340 000	1 220 000	36 000	7,8	1 510	1 880	21	2,79	**54240-MP**	**U240**
190	300	110	335 000	1 330 000	37 500	9,6	1 420	1 680	25,2	–	**52244-MP**	**–**
	300	115,2	335 000	1 330 000	37 500	9,6	1 420	1 680	23	3,31	**54244-MP**	**U244**

medias *https://www.schaeffler.de/std/1F9A*

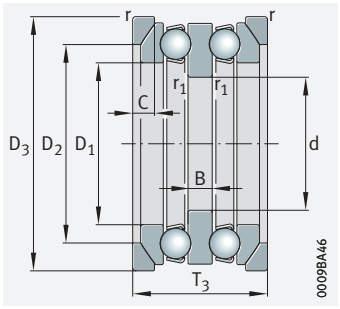

542
Spherical housing locating washers
Support washers U2

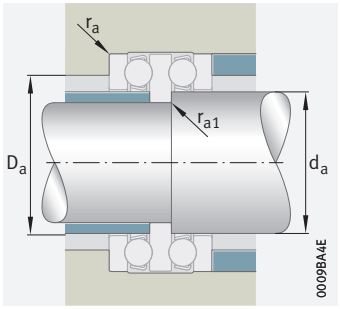

Mounting dimensions

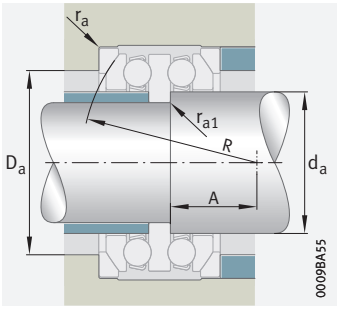

Mounting dimensions

Dimensions											Mounting dimensions			
d	D_1	B	r min.	r_1 min.	R	A	D_2	D_3	C	T_3	d_a	D_a max.	r_a max.	r_{a1} max.
140	163	20	1,5	1,1	–	–	–	–	–	–	160	186	1,5	1
	163	20	1,5	1,1	160	70	110	235	21	190	160	190	1,5	1
	164	33	3	1,1	–	–	–	–	–	–	160	204	2,5	1
150	173	21	1,5	1,1	–	–	–	–	–	–	170	198	1,5	1
	173	21	1,5	1,1	180	87	117	250	21,5	200	170	200	1,5	1
	183	21	1,5	2	–	–	–	–	–	–	180	208	1,5	1
	183	21	1,5	2	200	108,5	118	260	21,5	210	180	210	1,5	1
	174	33	3	1,1	–	–	–	–	–	–	170	214	2,5	1
160	194	24	2	2	–	–	–	–	–	–	190	222	2	2
	194,7	24	2	2	200	93,5	131	280	23	230	190	230	2	2
	195	40	4	2	–	–	–	–	–	–	190	242	3	2
170	204	24	2	2	–	–	–	–	–	–	200	232	2	2
	204	24	2	2	225	120,5	133	290	23	240	200	240	2	2
190	224	24	2	2	–	–	–	–	–	–	220	252	2	2
	224	24	2	2	225	114	134	310	25	260	220	260	2	2

Axial cylindrical roller bearings



Matrix for bearing preselection 1041

1 Axial cylindrical roller bearings 1042

1.1 Bearing design 1042
1.2 Load carrying capacity 1045
1.3 Compensation of angular misalignments 1045
1.4 Lubrication 1045
1.5 Sealing 1045
1.6 Speeds 1046

1.7 Noise *1046*
1.8 Temperature range *1046*
1.9 Cages *1047*
1.10 Internal clearance *1047*
1.11 Dimensions, tolerances *1048*
1.12 Suffixes *1048*
1.13 Structure of bearing designation *1049*
1.14 Dimensioning *1049*
1.15 Minimum load *1050*
1.16 Design of bearing arrangements *1050*
1.17 Mounting and dismounting *1051*
1.18 Legal notice regarding data freshness *1052*
1.19 Further information *1052*
Product tables *1054*
Axial cylindrical roller bearings, axial cylindrical roller and cage assemblies, axial bearing washers *1054*

Matrix for bearing preselection

The matrix gives an overview of the types and design features.

It can be used to make a preliminary assessment of whether a bearing is fundamentally suitable for the envisaged application.

The additional information provided in the product chapter (see column "detailed information") and in the Technical principles must, however, be observed in addition to this overview in selection of the bearing.

Design features and suitability			Axial cylindrical roller bearings	
+++ extremely suitable ++ highly suitable + suitable (+) suitable with restrictions – not suitable/not applicable ✓ available				detailed information ➤ 1042
Load carrying capacity	radial		–	➤ 1045|1.2
	axial, one direction		++	➤ 1045|1.2
	axial, both directions		–	➤ 1045|1.2
	moments		–	
Compensation of angular misalignments	static		–	➤ 1045|1.3
	dynamic		–	➤ 1045|1.3
Bearing design	cylindrical bore		✓	➤ 1042|1.1
	tapered bore		–	
	separable		✓	➤ 1051|1.17
Lubrication	greased		–	➤ 1045|1.4
Sealing	open		✓	➤ 1045|1.5
	non-contact		–	1045
	contact		–	➤ 1045|1.5
Operating temperature in °C	from to		–20 +120	➤ 1046|1.8
Suitability for	high speeds		(+)	➤ 1046|1.6
	high running accuracy		++	➤ 1048|1.11 ➤ 115
	low-noise running		(+)	➤ 1046|1.7 ➤ 27
	high rigidity		++	➤ 54
	reduced friction		(+)	➤ 56
	length compensation within bearing		–	
	non-locating bearing arrangement		–	
	locating bearing arrangement		++	➤ 141
X-life bearings		X-life	–	
Bearing bore d in mm	from to		15 320[1]	➤ 1054
Product tables	from page ➤		1054	

[1] Larger catalogue bearings GL 1

1 Axial cylindrical roller bearings

Single and double row axial cylindrical roller bearings are particularly suitable where:

- high axial and shock loads occur in one direction but no radial loads are present ➤*1042*|*1* and ➤*1045*|*1.2*
- the load carrying capacity of the corresponding axial deep groove ball bearings is no longer adequate (in this case, bearings of series 811 and 812 are especially suitable) ➤*1042*|*1*
- the bearing arrangement must have very high axial rigidity
- the axial space available is very small ➤*1042*|*1* and ➤*1054*|
- the bearing arrangement can be configured, where the axial space is very small, as a direct bearing arrangement ➤*1042*|*1.1*
- the bearing parts can or must be mounted separately
- the bearing arrangement is not configured in itself but, for cost reasons, ready-to-fit standard bearings are to be used

For an overview of other product-specific features, see the Matrix for bearing preselection ➤*1041*.

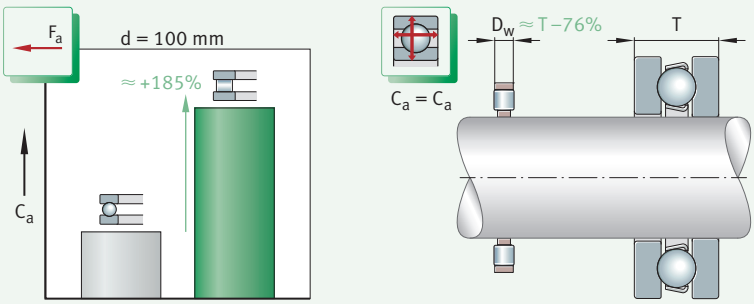

1
Axial cylindrical roller bearing and axial ball bearing – comparison of load carrying capacity and design envelope

F_a = *axial load*
C_a = *basic dynamic load rating*
D_w = *roller diameter*
T = *axial section height of axial deep groove ball bearing*

1.1 Bearing design

✎ *Design variants*

Axial cylindrical roller bearings are available as:

- single and double row bearings
- individual bearing parts for combination, comprising
  - axial cylindrical roller and cage assembly (prefix K)
  - housing locating washer (prefix GS)
  - shaft locating washer (prefix WS)
  - bearing washers (prefix LS, alternatively for shaft and housing locating washer)

Larger catalogue bearings and other bearing designs GL 1.

Axial cylindrical roller bearings

Designed for bearing arrangements with very small axial space

Axial cylindrical roller bearings are part of the group of axial roller bearings. In contrast to the ball, the roller has a larger contact area perpendicular to the roller axis. As a result, it can transmit higher forces, has greater rigidity and allows smaller rolling element diameters under the same load. The single and double row bearings comprise flat, ribless washers (housing and shaft locating washers) between which axial cylindrical roller and cage assemblies are arranged ➤*1043*| 2 and ➤*1044*| 5. Their axial section height T corresponds only to the diameter of the rollers plus the thickness of the washers. Due to this design, the bearings are particularly small in axial height ➤*1054*|. The axial cages are made from brass or plastic and are fitted with one or two rows of cylindrical rollers. Since sliding occurs towards the ends of the rollers during rolling of the rolling elements and this increases with the length of the roller, bearings with a wide cross-section have several short rollers arranged adjacent to each other, e.g. double row designs ➤*1043*| 2.

Rollers with profiled ends increase the operating life of the bearings

The cylindrical rollers have profiled ends, i.e. they have a slight lateral curvature towards the ends. This modified line contact between the rollers and raceways prevents damaging edge stresses ➤*1043*| 3. This in turn has a positive effect on the operating life of the bearings.

The use of complete axial cylindrical roller bearings (shaft locating washer, axial cylindrical roller and cage assembly and housing locating washer) is then advisable if, for example, high speeds occur and the bearing washers must therefore be centred precisely.

Roller and cage assembly and bearing washers are also available individually

The bearing parts for axial cylindrical roller bearings are also available individually ➤*1044*| 4 and ➤*1044*| 5. Axial cylindrical roller and cage assemblies (without shaft and housing locating washers) are suitable, for example, for bearing arrangements with very small axial design space.

Cylindrical roller bearings 811 and 812 are of a single row design and correspond to DIN 722:2005 and ISO 104:2015. The bearings 893 and 894 are of a double row design and are configured in accordance with DIN 616:2000 and ISO 104:2015.

2
Axial cylindrical roller bearings

F_a = *axial load*

① *Single row bearing*
② *Double row bearing*
③ *Shaft locating washer*
④ *Housing locating washer*
⑤ *Axial cylindrical roller and cage assembly*

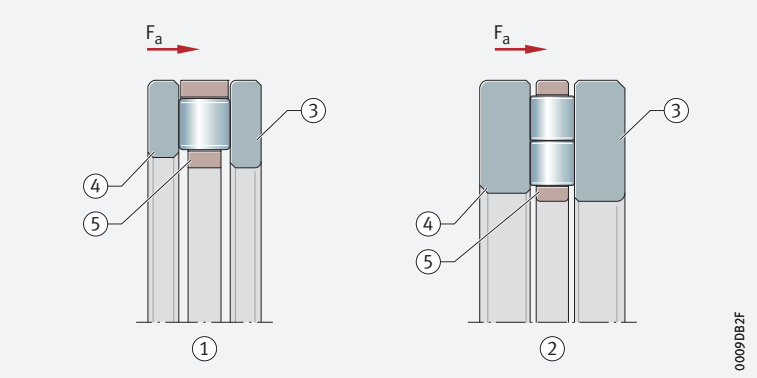

3
Roller profile and stress distribution

① *Cylindrical roller profile (high stress peaks)*
② *Roller with profiled ends (no stress peak)*
③ *Cylindrical outside surface region*
④ *Region of logarithmic tapering*
⑤ *Rounding of edge*

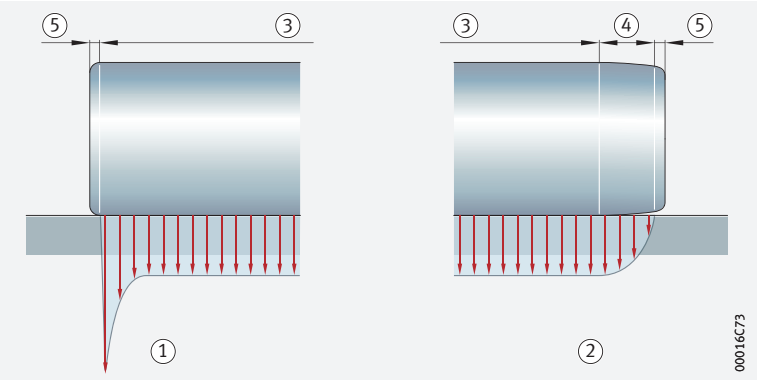

Axial cylindrical roller and cage assemblies

Very high axial load carrying capacity with low section height

The cage assemblies comprise axial cages and one or two rows of cylindrical rollers ➤*1044*| *4*. They have a particularly small axial section height and high axial load carrying capacity. The cages are made from polyamide or brass and are guided on the shaft.

For direct bearing arrangements, running surfaces must be produced as a rolling bearing raceway

Axial cylindrical roller and cage assemblies are generally combined with one housing locating washer and one shaft locating washer. If they are to be used directly – i. e. without axial bearing washers – in the adjacent construction, the raceway for the rollers must be produced as a rolling bearing raceway ➤*1050*| *1.16*. It is also possible to use two shaft locating washers or two housing locating washers in combination with one axial cylindrical roller and cage assembly.

The diameter series 1, 2, 3, 4 of the axial cylindrical roller and cage assemblies correspond to DIN 616:2000 and ISO 104:2015.

4
Axial cylindrical roller and cage assemblies

F_a = *axial load*

① *Single row*
② *Double row*

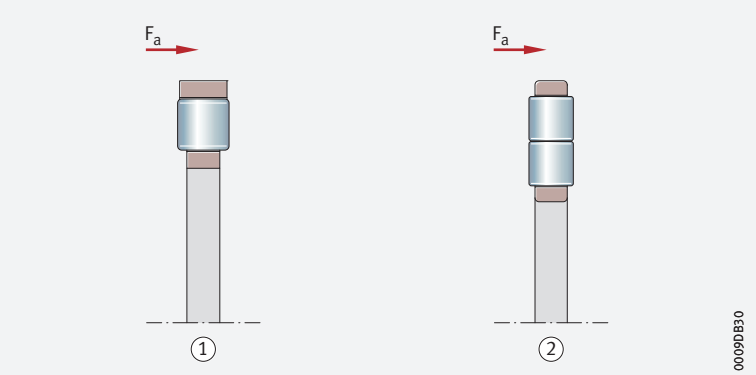

Axial bearing washers

Housing and shaft locating washers

Housing locating washers are externally centred, shaft locating washers are internally centred ➤*1044*| *5* and ➤*1050*| *1.16*. They must be used if the adjacent construction cannot be used as a raceway for the rolling elements. The washers are made from through hardening rolling bearing steel. The bore and outside diameter are precision machined, the raceways are ground to high accuracy.

The diameter series 1, 2, 3, 4 of the axial bearing washers correspond to DIN 616:2000 and ISO 104:2015.

Bearing washers

Bearing washers are suitable for use as a housing or shaft locating washer. They are used in applications that do not require precise centring of the axial bearing washers. The raceway of the bearing washers is hardened and ground. The bearing washers are suitable for axial cylindrical roller and cage assemblies K811 and axial needle roller and cage assemblies AXK.

5
Axial bearing washers

① *Housing locating washer, externally centred*
② *Shaft locating washer, internally centred*
③ *Bearing washer*
④ *Raceway*

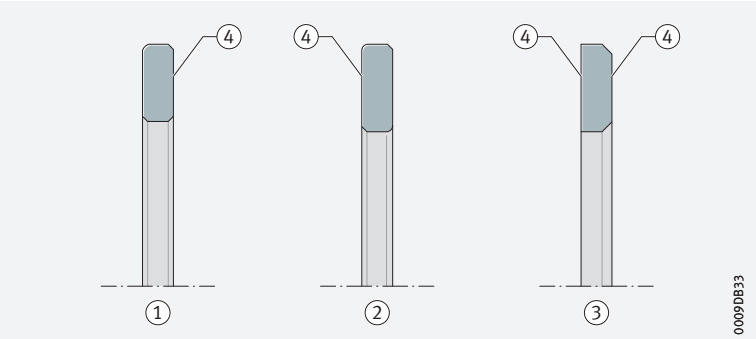

1.2 Load carrying capacity

For very high axial loads acting in one direction

Single and double row axial cylindrical roller bearings can support high axial loads as well as axial shock loads in one direction, but must not be subjected to radial load ➤*1049*|*1.14*. If radial loads do occur, these forces must be supported by an additional bearing (e.g. by a needle roller and cage assembly) ➤*1045*|6.

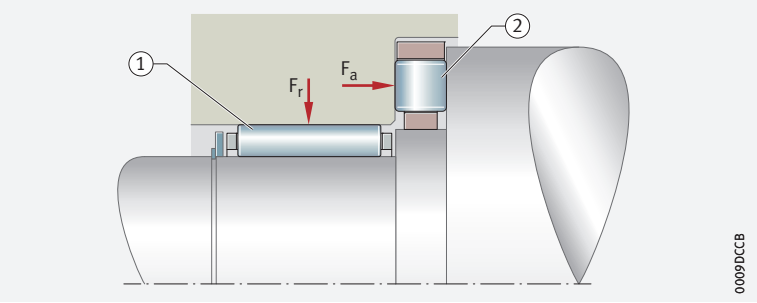

6 *Axial and radial loads*

F_r = *radial load*
F_a = *axial load*

① *Needle roller and cage assembly as radial bearing (direct bearing arrangement)*

② *Axial cylindrical roller and cage assembly as axial bearing (direct bearing arrangement)*

1.3 Compensation of angular misalignments

The bearings do not permit any skewing between the shaft and the housing. If angular misalignments occur between the locating surfaces on the shaft and in the housing, this will cause damage to the bearing and considerably reduce its operating life.

1.4 Lubrication

Oil or grease lubrication is possible

Axial cylindrical roller bearings are not greased. The bearings must be lubricated with oil or grease.

Compatibility with plastic cages

When using bearings with plastic cages, compatibility between the lubricant and the cage material must be ensured if synthetic oils, lubricating greases with a synthetic oil base or lubricants containing a high proportion of EP additives are used.

If there is any uncertainty regarding the suitability of the selected lubricant for the application, please consult Schaeffler or the lubricant manufacturer.

Observe oil change intervals

Aged oil and additives in the oil can impair the operating life of plastics at high temperatures. As a result, stipulated oil change intervals must be strictly observed.

1.5 Sealing

Provide seals in the adjacent construction

The bearings are not sealed; i.e. sealing of the bearing position must be carried out in the adjacent construction. This must reliably prevent:

- moisture and contaminants from entering the bearing
- the egress of lubricant from the bearing position

1.6 Speeds

Speeds in the product tables

The product tables generally give two speeds for the bearings:

- the kinematic limiting speed n_G
- the thermal speed rating $n_{\vartheta r}$

Limiting speeds

The limiting speed n_G is the kinematically permissible speed of the bearing. Even under favourable mounting and operating conditions, this value should not be exceeded without prior consultation with Schaeffler ➤64.

The values in the product tables are valid for oil lubrication.

Values for grease lubrication

For grease lubrication, 25% of the value stated in the product tables is permissible in each case.

Reference speeds

$n_{\vartheta r}$ is used to calculate n_ϑ

The thermal speed rating $n_{\vartheta r}$ is not an application-oriented speed limit, but is a calculated ancillary value for determining the thermally safe operating speed n_ϑ ➤64.

1.7 Noise

Schaeffler Noise Index

The Schaeffler Noise Index (SGI) is not yet available for this bearing type ➤69. The data for these bearing series will be introduced and updated in stages.

Further information:

- ***medias*** *https://medias.schaeffler.com*

1.8 Temperature range

Limiting values

The operating temperature of the bearings is limited by:

- the dimensional stability of the bearing washers and cylindrical rollers
- the cage
- the lubricant

Possible operating temperatures of axial cylindrical roller bearings ➤1046|▦1.

▦1
Permissible temperature range

Operating temperature	Axial cylindrical roller bearings with brass or polyamide cage PA66
	–20 °C to +120 °C

In the event of anticipated temperatures which lie outside the stated values, please contact Schaeffler.

1.9 Cages

Solid cages made from brass and polyamide PA66 are used as standard

Standard cages ➤*1047*| ▦ *2*. The cage design is dependent on the bearing series and the bearing size. Other cage designs are available by agreement. With such cages, however, suitability for high speeds and temperatures as well as the basic load ratings may differ from the values for the bearings with standard cages.

For high continuous temperatures and applications with difficult operating conditions, bearings with brass cages should be used. If there is any uncertainty regarding cage suitability, please consult Schaeffler.

▦ *2*
Cage, cage suffix, bore code

Bearing series	Solid cage made from polyamide PA66 TV standard	Solid brass cage M standard
	Bore code	
811, K811	up to 34	from 36
812, K812	06 to 26	from 28
893, K893	06 to 16	17 to 30
894, K894	12 to 14	from 15

1.10 Internal clearance

Axial clearance and preload are determined by the application

In the case of axial cylindrical roller bearings, the internal clearance (axial clearance) is only achieved when the bearings are mounted. The requisite axial clearance of the bearing arrangement is dependent on the application and must take account of the conditions in the bearing arrangement while warm from operation and subjected to load.
If axial cylindrical roller bearings are subjected to vibrations while under predominantly static load, for example, they must be lightly preloaded. Preload can be applied, for example, using calibrated sheets (shims) ➤*1047*| ⧉ *7*. Other suitable means include shaft nuts, disc springs, etc. ➤*1050*| *1.15*. It must always be ensured that no slippage occurs in operation between the rolling elements and raceways ➤*1050*| *1.15*. It must also be ensured that the preload does not exceed the optimum value, otherwise there will be an increase in friction and therefore in heat generation in the bearing. These will both have a negative effect on the operating life of the bearings.

If there is any uncertainty regarding correct setting, please consult Schaeffler.

⧉ *7*
Setting the axial clearance by means of shims

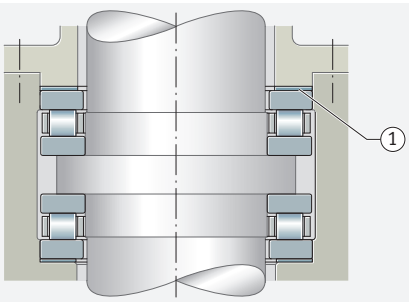

① *Calibrated sheet (shim)*

1.11 Dimensions, tolerances

Dimension standards

The main dimensions of axial cylindrical roller bearings correspond to ISO 104:2015.

Chamfer dimensions

The limiting dimensions for chamfer dimensions correspond to DIN 620-6:2004. Overview and limiting values ➤ *140*. Nominal value of chamfer dimension ➤ *1054*.

Tolerances

The dimensional and running tolerances of axial bearing washers GS and WS correspond to the tolerance class Normal in accordance with ISO 199:2014 ➤ *135* | *25* to ➤ *137* | *28*.

Tolerances of the bore and outside diameter as well as of the width of the bearing parts ➤ *1048* | *3* and ➤ *1048* | *8*.

3 *Dimensions and tolerances of bearing parts*

Bearing component	Dimension	Tolerance
Axial cylindrical roller and cage assembly K	D_{c1}	E11[1)]
	D_c	a13[1)]
	D_w	to DIN 5402-1
Housing locating washer GS	D_1	–
	D	to ISO 199
	B	h11
Shaft locating washer WS	d	to ISO 199
	d_1	–
	B	h11
Bearing washer LS	d	E12[1)]
	D	a12[1)]
	B	h11

1) *Deviation of the bore diameter Δ_{dmp} and deviation of the outside diameter Δ_{Dmp}* ➤ *140*.

8 *Bearing parts – axial cylindrical roller and cage assemblies and bearing washers*

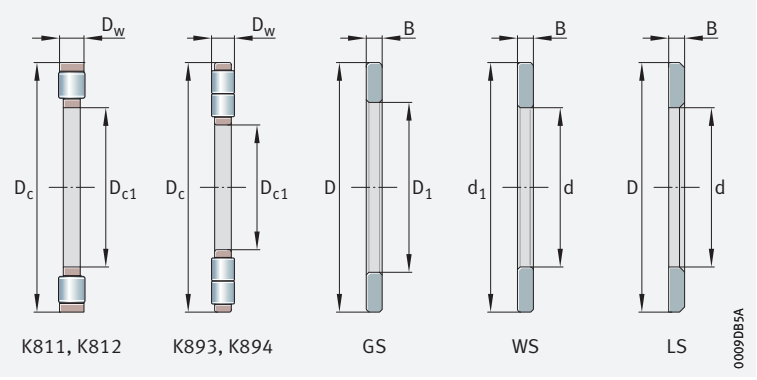

1.12 Suffixes

Suffixes describe the design and features of a bearing in more detail.

4 *Suffixes and corresponding descriptions*

Suffix	Description of suffix	
M	Solid brass cage	Standard, dependent on bore code
TV	Solid cage made from glass fibre reinforced polyamide PA66	
P5	High dimensional, geometrical and running accuracy	Special design for axial bearing washers GS, WS; available by agreement

1.13 Structure of bearing designation

With ***medias*** interchange, equivalent Schaeffler bearing designations can be determined for bearing designations from other rolling bearing manufacturers *https://www.schaeffler.de/std/1B69*.

Examples of composition of bearing designation

The designation of bearings follows a set model. Examples ➤*1049*|*9* and ➤*1049*|*10*. The composition of the designation is subject to DIN 623-1 ➤*102*|*10*.

9
Single row axial cylindrical roller bearing, comprising axial roller and cage assembly, shaft locating washer and housing locating washer: designation structure

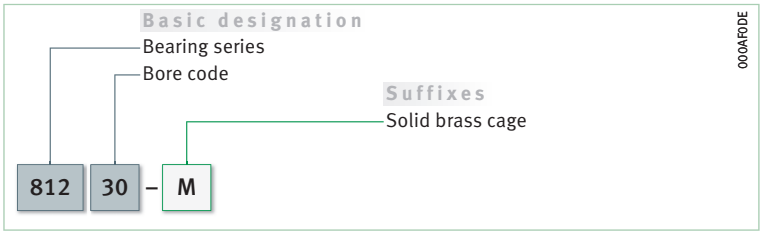

10
Double row axial cylindrical roller bearing, comprising axial roller and cage assembly, shaft locating washer and housing locating washer: designation structure

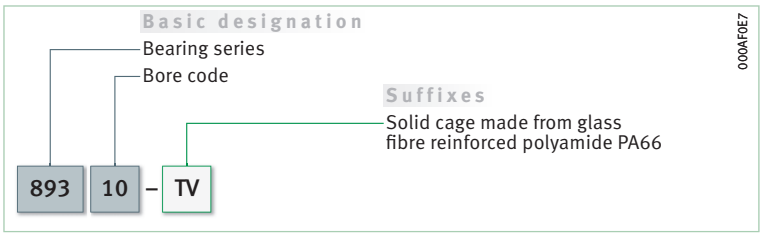

1.14 Dimensioning

Equivalent dynamic bearing load

Axial cylindrical roller bearings can only support axial forces ➤*1045*|*1.2*. In the rating life equation, P is therefore substituted by the value for F_a ➤*1049*|*1*.

1
Equivalent dynamic load

$$P = F_a$$

Legend

P	N	Equivalent dynamic bearing load
F_a	N	Axial load.

Equivalent static bearing load

Combined loads are not possible

In relation to the direction of load, the same conditions apply as for the equivalent dynamic bearing load, i.e. combined loads are not permissible.

Since the bearings can only support axial loads, the following applies:

2
Equivalent static load

$$P_0 = F_{0a}$$

Legend

P_0	N	Equivalent static bearing load
F_{0a}	N	Largest axial load present (maximum load).

Static load safety factor

$S_0 = C_0/P_0$

In addition to the basic rating life L (L_{10h}), it is also always necessary to check the static load safety factor S_0 ➤*1049*|*3*.

3
Static load safety factor

$$S_0 = \frac{C_0}{P_0}$$

Legend

S_0	–	Static load safety factor
C_0	N	Basic static load rating
P_0	N	Equivalent static bearing load.

1.15 Minimum load

Rolling bearings under low loads are particularly prone to slippage

In order to prevent slippage damage, the bearing must be subjected to a minimum axial load $F_{a\,min}$ ➤1050| 4 and ➤1050| 5.
In vertical bearing arrangements in particular, the requisite minimum axial load $F_{a\,min}$ is normally achieved, however, simply by the weight of the bearing parts and the external forces. If this is not the case, the bearing arrangement must be preloaded, for example by means of springs or
a housing nut.

4
Minimum axial load

$$F_{a\,min} = 0{,}0005 \cdot C_{0a} + k_a \left(\frac{C_{0a} \cdot n}{10^8} \right)^2$$

Legend

$F_{a\,min}$	N	Minimum axial load
C_{0a}	N	Basic static load rating ➤1054|
k_a	–	Factor for determining the minimum axial load ➤1050| 5
n	min^{-1}	Speed.

5
Factor k_a for calculating the minimum axial load

Series	Factor k_a
K811	1,4
K812	0,9
K893	0,7
K894	0,5

1.16 Design of bearing arrangements

Design of adjacent parts

Axial cylindrical roller bearings cannot tolerate angular misalignments ➤1045|1.3. The locating surfaces for the bearing parts on the shaft and in the housing must therefore be vertical to the shaft axis, while the adjacent parts must be rigid and flat. They must be configured such that the bearing washers are supported as far as possible over the whole circumference and over the whole raceway width; values ➤1054|. The radial cage guidance surfaces must be precision machined and wear-resistant (Ramax 0,8 (Rzmax 4)).

Mounting diameter on the shaft and in the housing

For the mounting dimensions, the following values apply ➤1054|:

- mounting diameter on the shaft $\geqq d_a$
- mounting diameter in the housing $\leqq D_a$

Tolerances for shaft and housing bore

Proven tolerances are given in ➤1050| 6. If the data are observed, this will give correct radial guidance of the bearing elements.

6
Tolerances for shafts and housing bores

Bearing component		Tolerance class[1] for	
		Shaft	Bore
Axial cylindrical roller bearings	Shaft guided	h8	–
Housing locating washers	–	–	H9
Shaft locating washers	–	h8	–
Bearing washers	Externally centred as housing locating washer	Shaft released	H9
	Internally centred as shaft locating washer	h8	Bore released

[1] *The envelope requirement Ⓔ applies.*

Guidance of bearing parts

Release of shaft and housing locating washers, as a function of centring

If the bearing washers are centred on the shaft, they must have radial clearance in the housing bore while, if they are centred in the housing, there must be radial clearance between the washer bore and the shaft ➤1051|11.

11
Guidance and release of shaft and housing locating washers

① *Housing locating washer (guidance in the housing), radial clearance on the shaft*
② *Shaft locating washer (guidance on the shaft), radial clearance in the housing*

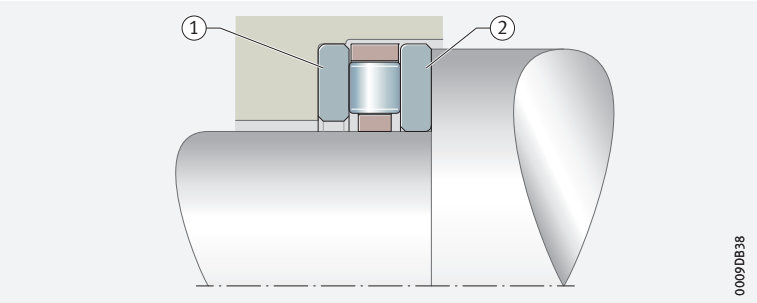

Guidance of axial roller and cage assemblies

In order to achieve the lowest possible sliding speeds on the guidance surfaces, the axial cylindrical roller and cage assemblies are generally guided on the shaft. This is particularly important in the case of high speeds.

For a direct bearing arrangement of roller and cage assemblies: harden and grind the raceways for the rollers

If the axial design space is particularly small, axial cylindrical roller and cage assemblies can also run directly (without axial bearing washers) on the adjacent construction. In this case – and if the load carrying capacity of the axial cylindrical roller and cage assemblies is to be fully utilised – the raceways on the shaft and in the housing must be produced as a rolling bearing raceway or must correspond to the quality and hardness of axial bearing washers. The surface hardness of the raceway must be 670 HV to 840 HV, the hardening depth CHD or SHD must be sufficiently large ➤182. The surface roughness Ra must be $\leqq$ 0,2 µm. At a mean roughness value of Ra $>$ 0,2 µm, it is no longer possible to utilise the full load carrying capacity of the bearings. When designing the raceway on the shaft and in the housing, the raceway dimensions E_a and E_b must be observed ➤1054|▦. If the values are observed, this will ensure that the raceways for the cylindrical rollers – taking account of any possible axial offset of the roller and cage assembly – are adequately dimensioned.

1.17 Mounting and dismounting

The mounting and dismounting options for the bearings must be taken into consideration in the design of the bearing position.

As the bearings are not self-retaining, they are easy to mount

Axial cylindrical roller bearings are not self-retaining. As a result, the bearing parts (shaft locating washer, housing locating washer and axial cylindrical roller and cage assembly) can be mounted separately from each other. This gives simplified mounting of the bearings.

Mounting position of the bearing washers

The correct mounting position has a considerable influence on the function of the bearing arrangement. Axial bearing washers must always be mounted with the raceway side facing the rolling elements.

Shaft locating washers

On shaft locating washers, the raceway side is indicated by the smaller chamfer on the bore diameter of the washer.

Housing locating washers

On housing locating washers, the raceway side is indicated by the smaller chamfer on the outside diameter of the washer.

Schaeffler Mounting Handbook

Rolling bearings must be handled with great care

Rolling bearings are well-proven precision machine elements for the design of economical and reliable bearing arrangements, which offer high operational security. In order that these products can function correctly and achieve the envisaged operating life without detrimental effect, they must be handled with care.

The Schaeffler Mounting Handbook MH 1 gives comprehensive information about the correct storage, mounting, dismounting and maintenance of rotary rolling bearings *https://www.schaeffler.de/std/1D53*. It also provides information which should be observed by the designer, in relation to the mounting, dismounting and maintenance of bearings, in the original design of the bearing position. This book is available from Schaeffler on request.

1.18 Legal notice regarding data freshness

✎ The further development of products may also result in technical changes to catalogue products

Of central interest to Schaeffler is the further development and optimisation of its products and the satisfaction of its customers. In order that you, as the customer, can keep yourself optimally informed about the progress that is being made here and with regard to the current technical status of the products, we publish any product changes which differ from the printed version in our electronic product catalogue.

§ We therefore reserve the right to make changes to the data and illustrations in this catalogue. This catalogue reflects the status at the time of printing. More recent publications released by us (as printed or digital media) will automatically precede this catalogue if they involve the same subject. Therefore, please always use our electronic product catalogue to check whether more up-to-date information or modification notices exist for your desired product.

Link to electronic product catalogue

The following link will take you to the Schaeffler electronic product catalogue: *https://medias.schaeffler.com*.

1.19 Further information

In addition to the data in this chapter, the following chapters in Technical principles must also be observed in the design of bearing arrangements:

- Determining the bearing size ➤*34*
- Rigidity ➤*54*
- Friction and increases in temperature ➤*56*
- Speeds ➤*64*
- Bearing data ➤*97*
- Lubrication ➤*70*
- Sealing ➤*185*
- Design of bearing arrangements ➤*141*
- Mounting and dismounting ➤*194*



Axial cylindrical roller bearings

Axial cylindrical roller and cage assemblies
Axial bearing washers

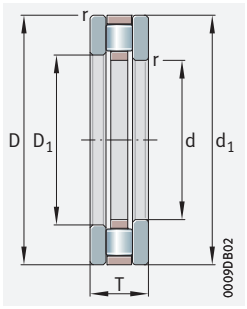

811, 812

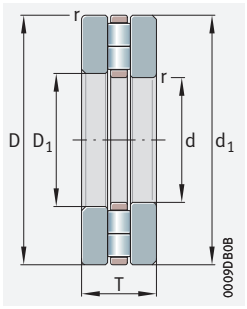

893, 894

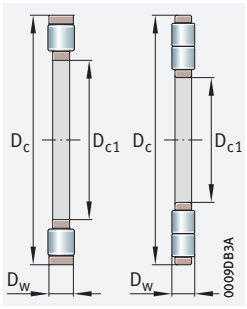

Single row: K811, K812
Double row: K893, K894

d = 15 – 60 mm

Main dimensions			Basic load ratings		Fatigue limit load	Limiting speed	Speed rating	Axial cylindrical roller bearings		Axial cylindrical roller and cage assemblies	
								Mass	Designation ➤*1048|1.12* ➤*1049|1.13*	Mass	Designation ➤*1048|1.12* ➤*1049|1.13*
d D_{c1}	D D_c	T	dyn. C_a	stat. C_{0a}	C_{ua}	n_G	$n_{\vartheta r}$	m		m	
			N	N	N	min^{-1}	min^{-1}	≈ kg		≈ kg	
15	28	9	14 400	28 500	4 050	13 600	6 400	0,024	**81102-TV**	0,006	**K81102-TV**
17	30	9	16 000	33 500	4 700	12 800	5 800	0,027	**81103-TV**	0,009	**K81103-TV**
20	35	10	25 000	53 000	7 500	10 800	4 500	0,037	**81104-TV**	0,013	**K81104-TV**
25	42	11	33 500	76 000	7 200	8 900	3 650	0,053	**81105-TV**	0,015	**K81105-TV**
30	47	11	35 500	86 000	8 200	7 700	3 150	0,057	**81106-TV**	0,017	**K81106-TV**
	52	16	64 000	141 000	14 400	7 200	2 700	0,123	**81206-TV**	0,033	**K81206-TV**
	60	18	69 000	197 000	19 200	6 400	2 650	0,24	**89306-TV**	0,04	**K89306-TV**
35	52	12	39 000	101 000	9 600	6 800	2 700	0,073	**81107-TV**	0,019	**K81107-TV**
	62	18	80 000	199 000	20 400	6 000	2 360	0,195	**81207-TV**	0,043	**K81207-TV**
	68	20	80 000	237 000	23 600	5 700	2 420	0,34	**89307-TV**	0,053	**K89307-TV**
40	60	13	56 000	148 000	14 800	5 900	2 240	0,105	**81108-TV**	0,031	**K81108-TV**
	68	19	107 000	265 000	23 700	5 200	1 820	0,249	**81208-TV**	0,081	**K81208-TV**
	78	22	123 000	385 000	39 500	4 850	1 770	0,484	**89308-TV**	0,098	**K89308-TV**
45	65	14	59 000	163 000	16 300	5 300	2 020	0,13	**81109-TV**	0,035	**K81109-TV**
	73	20	105 000	265 000	23 700	4 950	1 840	0,287	**81209-TV**	0,085	**K81209-TV**
	85	24	139 000	445 000	45 500	4 400	1 600	0,615	**89309-TV**	0,121	**K89309-TV**
50	70	14	62 000	177 000	17 700	4 900	1 840	0,14	**81110-TV**	0,038	**K81110-TV**
	78	22	118 000	315 000	28 000	4 550	1 570	0,356	**81210-TV**	0,098	**K81210-TV**
	95	27	168 000	560 000	59 000	3 950	1 450	0,887	**89310-TV**	0,175	**K89310-TV**
55	78	16	90 000	300 000	31 500	4 350	1 350	0,218	**81111-TV**	0,045	**K81111-TV**
	90	25	155 000	405 000	39 000	4 050	1 540	0,568	**81211-TV**	0,166	**K81211-TV**
	105	30	184 000	600 000	53 000	3 600	1 500	1,18	**89311-TV**	0,195	**K89311-TV**
60	85	17	103 000	315 000	32 500	4 000	1 360	0,266	**81112-TV**	0,082	**K81112-TV**
	95	26	172 000	480 000	46 500	3 700	1 290	0,642	**81212-TV**	0,176	**K81212-TV**
	110	30	197 000	670 000	59 000	3 400	1 350	1,26	**89312-TV**	0,21	**K89312-TV**
	130	42	390 000	1 220 000	132 000	3 050	1 080	2,818	**89412-TV**	0,538	**K89412-TV**

medias *https://www.schaeffler.de/std/1F9A*

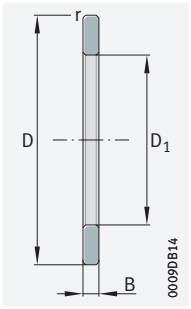

GS

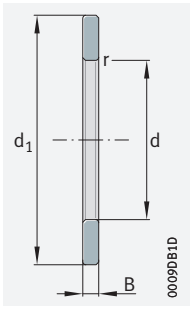

WS

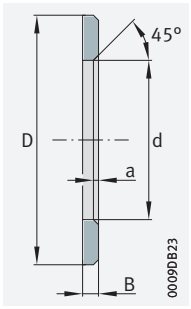

LS

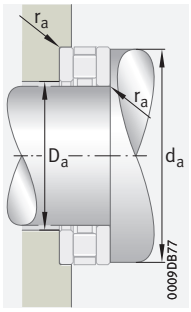

Mounting dimensions

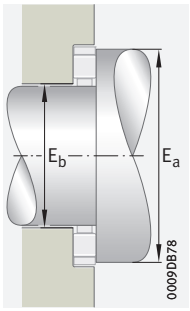

Mounting dimensions, direct bearing arrangement

	Axial bearing washers				Dimensions					Mounting dimensions			Raceway dimensions	
	Mass	Designation ➤*1048|1.12* ➤*1049|1.13*												
d D_{c1}	m ≈ kg	Housing locating washer	Shaft locating washer	Bearing washer	D_1	d_1	D_w	B	a r min.	d_a	D_a	r_a	E_b	E_a
15	0,008	**GS81102**	**WS81102**	**LS1528**	16	28	3,5	2,75	0,3	27	16	0,3	16	27
17	0,009	**GS81103**	**WS81103**	**LS1730**	18	30	3,5	2,75	0,3	29	18	0,3	18	29
20	0,011	**GS81104**	**WS81104**	**LS2035**	21	35	4,5	2,75	0,3	34	21	0,3	21	34
25	0,019	**GS81105**	**WS81105**	**LS2542**	26	42	5	3	0,6	41	26	0,6	26	41
30	0,02	**GS81106**	**WS81106**	**LS3047**	32	47	5	3	0,6	46	31	0,6	31	46
	0,045	**GS81206**	**WS81206**	–	32	52	7,5	4,25	0,6	50	31	0,6	31	50
	0,095	**GS89306**	**WS89306**	–	32	60	5,5	6,25	1	59	33	1	33	59
35	0,027	**GS81107**	**WS81107**	**LS3552**	37	52	5	3,5	0,6	51	36	0,6	36	51
	0,076	**GS81207**	**WS81207**	–	37	62	7,5	5,25	1	58	39	1	39	58
	0,134	**GS89307**	**WS89307**	–	37	68	6	7	1	67	38	1	38	67
40	0,037	**GS81108**	**WS81108**	**LS4060**	42	60	6	3,5	0,6	58	42	0,6	42	58
	0,084	**GS81208**	**WS81208**	–	42	68	9	5	1	66	43	1	43	66
	0,193	**GS89308**	**WS89308**	–	42	78	7	7,5	1	77	44	1	44	77
45	0,047	**GS81109**	**WS81109**	**LS4565**	47	65	6	4	0,6	63	47	0,6	47	63
	0,101	**GS81209**	**WS81209**	–	47	73	9	5,5	1	70	48	1	48	70
	0,247	**GS89309**	**WS89309**	–	47	85	7,5	8,25	1	83	49	1	49	83
50	0,051	**GS81110**	**WS81110**	**LS5070**	52	70	6	4	0,6	68	52	0,6	52	68
	0,129	**GS81210**	**WS81210**	–	52	78	9	6,5	1	75	53	1	53	75
	0,356	**GS89310**	**WS89310**	–	52	95	8	9,5	1,1	92	56	1,1	56	92
55	0,082	**GS81111**	**WS81111**	**LS5578**	57	78	6	5	0,6	77	56	0,6	57	77
	0,201	**GS81211**	**WS81211**	–	57	90	11	7	1	85	59	1	59	85
	0,485	**GS89311**	**WS89311**	–	57	105	9	10,5	1,1	103	61	1,1	61	103
60	0,092	**GS81112**	**WS81112**	**LS6085**	62	85	7,5	4,75	1	82	62	1	62	82
	0,233	**GS81212**	**WS81212**	–	62	95	11	7,5	1	91	64	1	64	91
	0,55	**GS89312**	**WS89312**	–	62	110	9	10,5	1,1	108	66	1,1	66	108
	1,115	**GS89412**	**WS89412**	–	62	130	14	14	1,5	126	65	1,5	65	126

Axial cylindrical roller bearings

Axial cylindrical roller and cage assemblies
Axial bearing washers

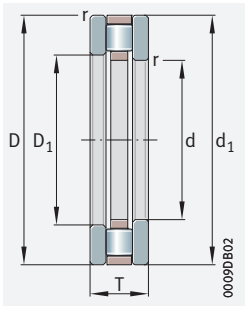

811, 812

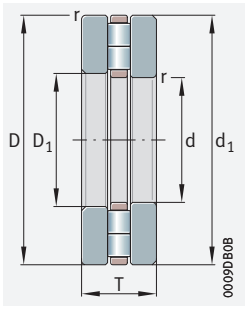

893, 894

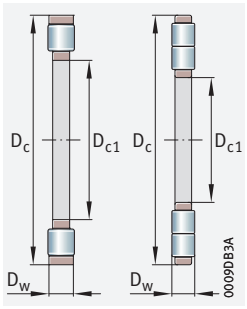

Single row: K811, K812
Double row: K893, K894

d = 65 – 100 mm

Main dimensions			Basic load ratings		Fatigue limit load	Limiting speed	Speed rating	Axial cylindrical roller bearings		Axial cylindrical roller and cage assemblies	
								Mass	Designation ➤*1048|1.12* ➤*1049|1.13*	Mass	Designation ➤*1048|1.12* ➤*1049|1.13*
d D_{c1}	D D_c	T	dyn. C_a	stat. C_{0a}	C_{ua}	n_G	$n_{\vartheta r}$	m		m	
			N	N	N	min^{-1}	min^{-1}	≈ kg		≈ kg	
65	90	18	107 000	340 000	34 500	3 700	1 260	0,31	**81113-TV**	0,09	**K81113-TV**
	100	27	177 000	500 000	49 000	3 550	1 250	0,721	**81213-TV**	0,185	**K81213-TV**
	115	30	194 000	670 000	59 000	3 200	1 330	1,33	**89313-TV**	0,21	**K89313-TV**
	140	45	445 000	1 410 000	151 000	2 850	1 010	3,52	**89413-TV**	0,72	**K89413-TV**
70	95	18	111 000	365 000	37 000	3 500	1 170	0,332	**81114-TV**	0,092	**K81114-TV**
	105	27	187 000	550 000	54 000	3 250	1 120	0,768	**81214-TV**	0,212	**K81214-TV**
	125	34	239 000	830 000	76 000	2 950	1 200	1,82	**89314-TV**	0,29	**K89314-TV**
	150	48	475 000	1 500 000	161 000	2 650	1 010	4,18	**89414-TV**	0,76	**K89414-TV**
75	100	19	107 000	350 000	36 000	3 300	1 190	0,393	**81115-TV**	0,096	**K81115-TV**
	110	27	173 000	500 000	49 000	3 150	1 220	0,8	**81215-TV**	0,195	**K81215-TV**
	135	36	290 000	1 010 000	94 000	2 750	1 090	2,23	**89315-TV**	0,375	**K89315-TV**
	160	51	500 000	1 580 000	163 000	2 440	1 000	5,96	**89415-M**	1,78	**K89415-M**
80	105	19	106 000	350 000	36 000	3 150	1 180	0,4	**81116-TV**	0,095	**K81116-TV**
	115	28	201 000	630 000	61 000	2 900	980	0,9	**81216-TV**	0,234	**K81216-TV**
	140	36	305 000	1 110 000	102 000	2 650	1 000	2,37	**89316-TV**	0,42	**K89316-TV**
	170	54	560 000	1 770 000	183 000	2 280	940	7,04	**89416-M**	2,04	**K89416-M**
85	110	19	113 000	385 000	39 500	3 000	1 090	0,42	**81117-TV**	0,118	**K81117-TV**
	125	31	217 000	660 000	66 000	2 800	1 080	1,26	**81217-TV**	0,28	**K81217-TV**
	150	39	325 000	1 140 000	106 000	2 450	1 030	3,39	**89317-M**	0,93	**K89317-M**
	180	58	620 000	1 980 000	203 000	2 160	890	8,65	**89417-M**	2,71	**K89417-M**
90	120	22	141 000	465 000	41 000	2 750	1 070	0,62	**81118-TV**	0,15	**K81118-TV**
	135	35	290 000	890 000	96 000	2 550	910	1,77	**81218-TV**	0,54	**K81218-TV**
	155	39	335 000	1 200 000	111 000	2 350	980	3,63	**89318-M**	0,97	**K89318-M**
	190	60	680 000	2 200 000	225 000	2 040	840	9,94	**89418-M**	3,04	**K89418-M**
100	135	25	199 000	650 000	61 000	2 480	930	0,95	**81120-TV**	0,25	**K81120-TV**
	150	38	340 000	1 080 000	113 000	2 300	840	2,2	**81220-TV**	0,6	**K81220-TV**
	170	42	380 000	1 400 000	125 000	2 130	910	4,56	**89320-M**	1,18	**K89320-M**
	210	67	850 000	2 850 000	285 000	1 830	710	13,42	**89420-M**	3,92	**K89420-M**

medias *https://www.schaeffler.de/std/1F9A*

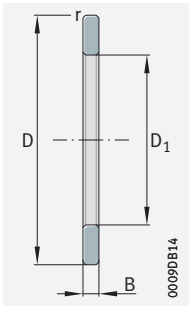

GS

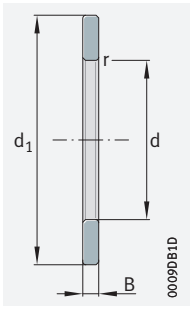

WS

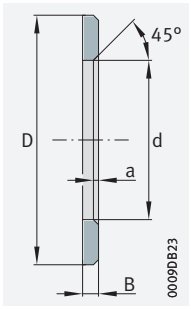

LS

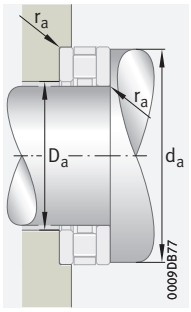

Mounting dimensions

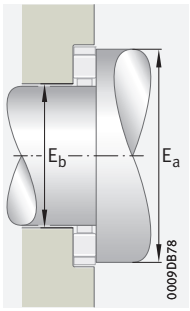

Mounting dimensions, direct bearing arrangement

	Axial bearing washers				Dimensions					Mounting dimensions			Raceway dimensions	
	Mass	Designation ➤*1048|1.12* ➤*1049|1.13*												
d D_{c1}	m ≈ kg	Housing locating washer	Shaft locating washer	Bearing washer	D_1	d_1	D_w	B	a r min.	d_a	D_a	r_a	E_b	E_a
65	0,11	**GS81113**	**WS81113**	**LS6590**	67	90	7,5	5,25	1	87	67	1	67	87
	0,268	**GS81213**	**WS81213**	**–**	67	100	11	8	1	96	69	1	69	96
	0,535	**GS89313**	**WS89313**	**–**	67	115	9	10,5	1,1	113	71	1,1	71	113
	1,4	**GS89413**	**WS89413**	**–**	68	140	15	15	2	135	70	2	70	135
70	0,12	**GS81114**	**WS81114**	**LS7095**	72	95	7,5	5,25	1	92	72	1	72	92
	0,278	**GS81214**	**WS81214**	**–**	72	105	11	8	1	102	74	1	74	102
	0,8	**GS89314**	**WS89314**	**–**	72	125	10	12	1,1	123	76	1,1	76	123
	1,73	**GS89414**	**WS89414**	**–**	73	150	16	16	2	147	76	2	76	147
75	0,136	**GS81115**	**WS81115**	**LS75100**	77	100	7,5	5,75	1	97	78	1	78	97
	0,293	**GS81215**	**WS81215**	**–**	77	110	11	8	1	106	79	1	79	106
	0,97	**GS89315**	**WS89315**	**–**	77	135	11	12,5	1,5	132	81	1,5	81	132
	2,09	**GS89415**	**WS89415**	**–**	78	160	17	17	2	156	82	2	82	156
80	0,144	**GS81116**	**WS81116**	**LS80105**	82	105	7,5	5,75	1	102	83	1	83	102
	0,333	**GS81216**	**WS81216**	**–**	82	115	11	8,5	1	112	84	1	84	112
	1,02	**GS89316**	**WS89316**	**–**	82	140	11	12,5	1,5	137	86	1,5	86	137
	2,5	**GS89416**	**WS89416**	**–**	83	170	18	18	2,1	165	88	2,1	88	165
85	0,151	**GS81117**	**WS81117**	**LS85110**	87	110	7,5	5,75	1	108	87	1	87	108
	0,49	**GS81217**	**WS81217**	**–**	88	125	12	9,5	1	119	90	1	90	119
	1,23	**GS89317**	**WS89317**	**–**	88	150	12	13,5	1,5	147	93	1,5	93	146
	2,97	**GS89417**	**WS89417**	**–**	88	180	19	19,5	2,1	175	93	2,1	93	175
90	0,225	**GS81118**	**WS81118**	**LS90120**	92	120	9	6,5	1	117	93	1	93	117
	0,614	**GS81218**	**WS81218**	**–**	93	135	14	10,5	1,1	129	95	1,1	95	129
	1,33	**GS89318**	**WS89318**	**–**	93	155	12	13,5	1,5	152	98	1,5	98	151
	3,45	**GS89418**	**WS89418**	**–**	93	190	20	20	2,1	185	99	2,1	99	185
100	0,35	**GS81120**	**WS81120**	**LS100135**	102	135	11	7	1	131	104	1	104	131
	0,8	**GS81220**	**WS81220**	**–**	103	150	15	11,5	1,1	142	107	1,1	107	142
	1,69	**GS89320**	**WS89320**	**–**	103	170	13	14,5	1,5	167	107	1,5	109	166
	4,75	**GS89420**	**WS89420**	**–**	103	210	22	22,5	3	205	111	3	111	205

Axial cylindrical roller bearings

Axial cylindrical roller and cage assemblies
Axial bearing washers

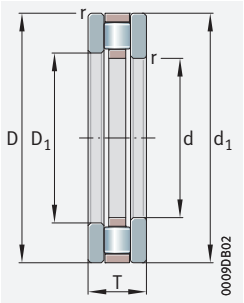

811, 812

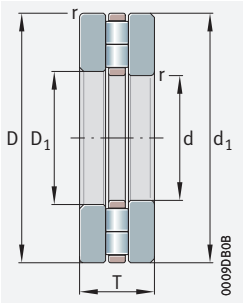

893, 894

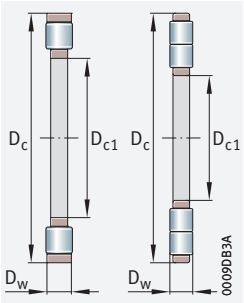

Single row: K811, K812
Double row: K893, K894

d = 110 – 170 mm

Main dimensions			Basic load ratings		Fatigue limit load	Limiting speed	Speed rating	Axial cylindrical roller bearings		Axial cylindrical roller and cage assemblies	
								Mass	Designation ➤1048|1.12 ➤1049|1.13	Mass	Designation ➤1048|1.12 ➤1049|1.13
d D_{c1}	D D_c	T	dyn. C_a	stat. C_{0a}	C_{ua}	n_G	$n_{\vartheta r}$	m		m	
			N	N	N	min^{-1}	min^{-1}	≈ kg		≈ kg	
110	145	25	207 000	700 000	64 000	2 280	860	1,04	**81122-TV**	0,27	**K81122-TV**
	160	38	325 000	1 030 000	106 000	2 150	870	2,29	**81222-TV**	0,53	**K81222-TV**
	190	48	500 000	1 870 000	180 000	1 900	780	6,7	**89322-M**	1,83	**K89322-M**
	230	73	1 010 000	3 400 000	340 000	1 680	640	17,41	**89422-M**	5,11	**K89422-M**
120	155	25	214 000	760 000	67 000	2 110	790	1,12	**81124-TV**	0,29	**K81124-TV**
	170	39	340 000	1 120 000	113 000	2 000	800	2,54	**81224-TV**	0,58	**K81224-TV**
	210	54	640 000	2 420 000	228 000	1 730	690	9,44	**89324-M**	2,64	**K89324-M**
	250	78	1 170 000	4 000 000	395 000	1 540	570	21,9	**89424-M**	6,37	**K89424-M**
130	170	30	255 000	900 000	81 000	1 940	770	1,67	**81126-TV**	0,38	**K81126-TV**
	190	45	480 000	1 520 000	154 000	1 820	720	3,98	**81226-TV**	0,92	**K81226-TV**
	225	58	720 000	2 700 000	255 000	1 620	650	11,2	**89326-M**	2,09	**K89326-M**
	270	85	1 330 000	4 600 000	435 000	1 420	520	27,1	**89426-M**	7,96	**K89426-M**
140	180	31	260 000	960 000	84 000	1 820	720	1,9	**81128-TV**	0,4	**K81128-TV**
	200	46	455 000	1 450 000	143 000	1 690	730	5,07	**81228-M**	1,8	**K81228-M**
	240	60	820 000	3 200 000	300 000	1 520	570	13,2	**89328-M**	2,57	**K89328-M**
	280	85	1 390 000	4 950 000	460 000	1 350	480	29,8	**89428-M**	8,53	**K89428-M**
150	190	31	270 000	1 020 000	88 000	1 710	670	2,2	**81130-TV**	0,43	**K81130-TV**
	215	50	590 000	1 940 000	191 000	1 580	610	7,17	**81230-M**	2,81	**K81230-M**
	250	60	840 000	3 350 000	310 000	1 440	540	13,9	**89330-M**	3,75	**K89330-M**
	300	90	1 580 000	5 700 000	530 000	1 250	440	35,4	**89430-M**	10,4	**K89430-M**
160	200	31	270 000	1 050 000	89 000	1 610	640	2,12	**81132-TV**	0,44	**K81132-TV**
	225	51	600 000	2 030 000	197 000	1 500	580	7,6	**81232-M**	3,01	**K81232-M**
	320	95	1 780 000	6 500 000	600 000	1 170	400	42	**89432-M**	12,4	**K89432-M**
170	215	34	360 000	1 380 000	126 000	1 510	570	2,41	**81134-TV**	0,66	**K81134-TV**
	240	55	680 000	2 340 000	226 000	1 400	540	9,3	**81234-M**	3,5	**K81234-M**
	340	103	1 990 000	7 400 000	670 000	1 100	365	51,9	**89434-M**	14,9	**K89434-M**

medias *https://www.schaeffler.de/std/1F9A*

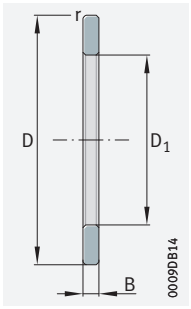

GS

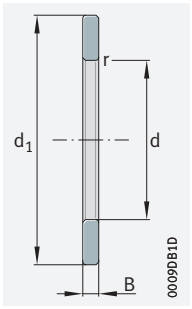

WS

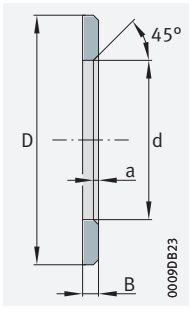

LS

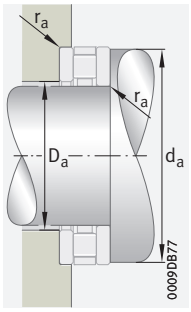

Mounting dimensions

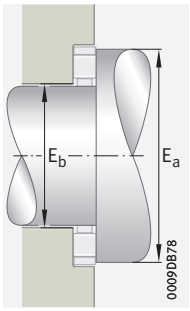

Mounting dimensions, direct bearing arrangement

	Axial bearing washers				Dimensions					Mounting dimensions			Raceway dimensions	
	Mass	Designation ➤*1048|1.12* ➤*1049|1.13*												
d D_{c1}	m ≈ kg	Housing locating washer	Shaft locating washer	Bearing washer	D_1	d_1	D_w	B	a r min.	d_a	D_a	r_a	E_b	E_a
110	0,385	**GS81122**	**WS81122**	**LS110145**	112	145	11	7	1	141	114	1	114	141
	0,88	**GS81222**	**WS81222**	**–**	113	160	15	11,5	1,1	152	117	1,1	117	152
	2,44	**GS89322**	**WS89322**	**–**	113	190	15	16,5	2	186	120	2	120	185
	6,15	**GS89422**	**WS89422**	**–**	113	230	24	24,5	3	223	121	3	121	223
120	0,415	**GS81124**	**WS81124**	**LS120155**	122	155	11	7	1	151	124	1	124	151
	0,98	**GS81224**	**WS81224**	**–**	123	170	15	12	1,1	162	127	1,1	127	162
	3,4	**GS89324**	**WS89324**	**–**	123	210	17	18,5	2,1	206	130	2,1	132	205
	7,7	**GS89424**	**WS89424**	**–**	123	250	26	26	4	243	133	4	133	243
130	0,643	**GS81126**	**WS81126**	**LS130170**	132	170	12	9	1	165	135	1	135	165
	1,53	**GS81226**	**WS81226**	**–**	133	187	19	13	1,5	181	137	1,5	137	181
	4,045	**GS89326**	**WS89326**	**–**	134	225	18	20	2,1	220	141	2,1	141	219
	9,5	**GS89426**	**WS89426**	**–**	134	270	28	28,5	4	263	145	4	145	263
140	0,749	**GS81128**	**WS81128**	**LS140180**	142	178	12	9,5	1	175	145	1	145	175
	1,635	**GS81228**	**WS81228**	**–**	143	197	19	13,5	1,5	191	147	1,5	151	195
	4,8	**GS89328**	**WS89328**	**–**	144	240	19	20,5	2,1	235	152	2,1	152	234
	10,6	**GS89428**	**WS89428**	**–**	144	280	28	28,5	4	273	155	4	155	273
150	0,796	**GS81130**	**WS81130**	**LS150190**	152	188	12	9,5	1	185	155	1	155	185
	2,18	**GS81230**	**WS81230**	**–**	153	212	21	14,5	1,5	211	158	1,5	162	210
	5,06	**GS89330**	**WS89330**	**–**	154	250	19	20,5	2,1	245	162	2,1	162	244
	12,5	**GS89430**	**WS89430**	**–**	154	300	30	30	4	293	167	4	167	293
160	0,842	**GS81132**	**WS81132**	**LS160200**	162	198	12	9,5	1	195	165	1	165	195
	2,3	**GS81232**	**WS81232**	**–**	163	222	21	15	1,5	220	168	1,5	171	219
	14,8	**GS89432**	**WS89432**	**–**	164	320	32	31,5	5	313	179	5	179	313
170	1,1	**GS81134**	**WS81134**	**–**	172	213	14	10	1,1	209	176	1,1	176	209
	2,9	**GS81234**	**WS81234**	**–**	173	237	22	16,5	1,5	235	180	1,5	184	233
	18,5	**GS89434**	**WS89434**	**–**	174	340	34	34,5	5	333	191	5	191	333

Axial cylindrical roller bearings

Axial cylindrical roller and cage assemblies
Axial bearing washers

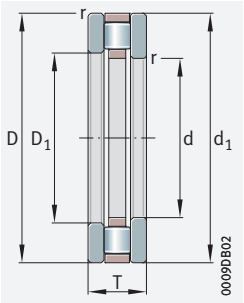

811, 812

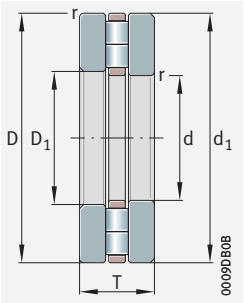

893, 894

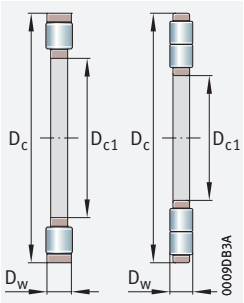

Single row: K811, K812
Double row: K893, K894

d = 180 – 320 mm

Main dimensions			Basic load ratings		Fatigue limit load	Limiting speed	Speed rating	Axial cylindrical roller bearings		Axial cylindrical roller and cage assemblies	
								Mass	Designation ➤1048|1.12 ➤1049|1.13	Mass	Designation ➤1048|1.12 ➤1049|1.13
d D_{c1}	D D_c	T	dyn. C_a	stat. C_{0a}	C_{ua}	n_G	$n_{\vartheta r}$	m		m	
			N	N	N	min^{-1}	min^{-1}	≈ kg		≈ kg	
180	225	34	340 000	1 300 000	117 000	1 430	590	3,3	**81136-M**	1,46	**K81136-M**
	250	56	700 000	2 440 000	232 000	1 340	520	9,9	**81236-M**	3,67	**K81236-M**
	360	109	2 210 000	8 200 000	730 000	1 050	345	60	**89436-M**	17,6	**K89436-M**
190	240	37	390 000	1 500 000	134 000	1 340	570	4,74	**81138-M**	1,84	**K81138-M**
	270	62	880 000	3 000 000	290 000	1 250	475	12,8	**81238-M**	5,17	**K81238-M**
	380	115	2 460 000	9 200 000	820 000	1 010	330	72,1	**89438-M**	20,9	**K89438-M**
200	250	37	395 000	1 550 000	136 000	1 290	550	4,95	**81140-M**	1,93	**K81140-M**
	280	62	900 000	3 150 000	300 000	1 190	450	14,2	**81240-M**	5,4	**K81240-M**
	400	122	2 700 000	10 200 000	900 000	960	305	82,6	**89440-M**	24	**K89440-M**
220	270	37	420 000	1 730 000	149 000	1 180	490	5,22	**81144-M**	2,04	**K81144-M**
	300	63	950 000	3 450 000	320 000	1 100	405	15,3	**81244-M**	5,8	**K81244-M**
	420	122	2 900 000	11 500 000	990 000	880	265	90,1	**89444-M**	25,7	**K89444-M**
240	300	45	600 000	2 500 000	216 000	1 070	420	8,45	**81148-M**	3,32	**K81148-M**
	340	78	1 370 000	5 000 000	450 000	970	330	26,2	**81248-M**	9,94	**K81248-M**
	440	122	3 000 000	12 200 000	1 040 000	850	250	95,9	**89448-M**	27,3	**K89448-M**
260	320	45	620 000	2 650 000	223 000	990	390	9,08	**81152-M**	3,55	**K81152-M**
	360	79	1 440 000	5 400 000	480 000	910	305	28,6	**81252-M**	10,8	**K81252-M**
	480	132	3 600 000	14 700 000	1 220 000	780	224	125	**89452-M**	36,8	**K89452-M**
280	350	53	870 000	3 650 000	310 000	910	330	12,6	**81156-M**	5,31	**K81156-M**
	380	80	1 460 000	5 600 000	490 000	860	290	31	**81256-M**	11,5	**K81256-M**
	520	145	4 250 000	17 600 000	1 440 000	700	195	159	**89456-M**	48,5	**K89456-M**
300	380	62	1 070 000	4 500 000	380 000	840	295	19,4	**81160-M**	7,6	**K81160-M**
	420	95	1 930 000	7 300 000	630 000	780	255	48,25	**81260-M**	17,8	**K81260-M**
	540	145	4 350 000	18 500 000	1 500 000	670	184	170	**89460-M**	49,8	**K89460-M**
320	400	63	1 100 000	4 750 000	395 000	800	280	20,7	**81164-M**	8,04	**K81164-M**
	580	155	5 500 000	19 900 000	1 490 000	640	184	203	**89464-M**	80,3	**K89464-M**

medias *https://www.schaeffler.de/std/1F9A*

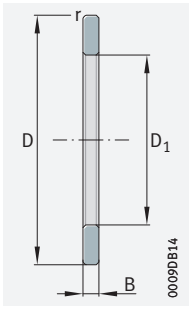

GS

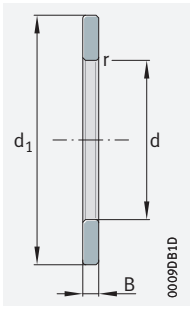

WS

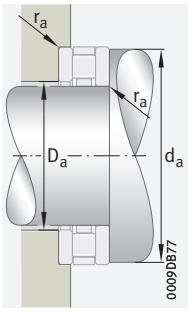

Mounting dimensions

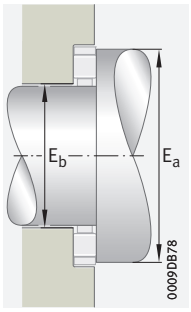

Mounting dimensions, direct bearing arrangement

	Axial bearing washers			Dimensions					Mounting dimensions			Raceway dimensions	
	Mass	Designation ➤1048|1.12 ➤1049|1.13											
d D_{c1}	m ≈ kg	Housing locating washer	Shaft locating washer	D_1	d_1	D_w	B	a r min.	d_a	D_a	r_a	E_b	E_a
180	1,12	**GS81136**	**WS81136**	183	222	14	10	1,1	219	185	1,1	186	220
	3,13	**GS81236**	**WS81236**	183	247	22	17	1,5	245	190	1,5	194	243
	21,3	**GS89436**	**WS89436**	184	360	36	36,5	5	351	200	5	200	351
190	1,45	**GS81138**	**WS81138**	193	237	15	11	1,1	233	197	1,1	198	234
	3,835	**GS81238**	**WS81238**	194	267	26	18	2	265	200	2	205	263
	25,6	**GS89438**	**WS89438**	195	380	38	38,5	5	373	214	5	212	371
200	1,51	**GS81140**	**WS81140**	203	247	15	11	1,1	243	206	1,1	208	244
	4,41	**GS81240**	**WS81240**	204	277	26	18	2	275	210	2	215	273
	29,3	**GS89440**	**WS89440**	205	400	40	41	5	393	226	5	224	391
220	1,59	**GS81144**	**WS81144**	223	267	15	11	1,1	263	226	1,1	228	264
	4,75	**GS81244**	**WS81244**	224	297	26	18,5	2	296	230	2	236	294
	32,2	**GS89444**	**WS89444**	225	420	40	41	6	411	244	6	244	411
240	2,57	**GS81148**	**WS81148**	243	297	18	13,5	1,5	296	248	1,5	253	294
	8,15	**GS81248**	**WS81248**	244	335	32	23	2,1	335	261	2,1	263	333
	34,3	**GS89448**	**WS89448**	245	440	40	41	6	433	266	6	264	431
260	2,765	**GS81152**	**WS81152**	263	317	18	13,5	1,5	316	268	1,5	272	314
	8,9	**GS81252**	**WS81252**	264	355	32	23,5	2,1	353	280	2,1	281	351
	44,25	**GS89452**	**WS89452**	265	480	44	44	6	472	288	6	286	468
280	3,65	**GS81156**	**WS81156**	283	347	22	15,5	1,5	346	288	1,5	294	344
	9,75	**GS81256**	**WS81256**	284	375	32	24	2,1	373	300	2,1	301	371
	55,6	**GS89456**	**WS89456**	285	520	48	48,5	6	512	311	6	309	508
300	5,92	**GS81160**	**WS81160**	304	376	25	18,5	2	373	315	2	316	372
	15,2	**GS81260**	**WS81260**	304	415	38	28,5	3	413	328	3	329	412
	60,15	**GS89460**	**WS89460**	305	540	48	48,5	6	533	331	6	329	528
320	6,35	**GS81164**	**WS81164**	324	396	25	19	2	394	334	2	336	392
	61,5	**GS89464**	**WS89464**	325	575	68	43,5	6	573	340	6	343	566

Axial needle roller bearings



Matrix for bearing preselection ____ 1065

1 Axial needle roller bearings ____ 1066

1.1 Bearing design ____ 1066
1.2 Load carrying capacity ____ 1069
1.3 Compensation of angular misalignments ____ 1069
1.4 Lubrication ____ 1069
1.5 Sealing ____ 1069
1.6 Speeds ____ 1069

1.7 Noise *1070*
1.8 Temperature range *1070*
1.9 Cages *1070*
1.10 Internal clearance *1070*
1.11 Dimensions, tolerances *1071*
1.12 Suffixes *1071*
1.13 Structure of bearing designation *1072*
1.14 Dimensioning *1072*
1.15 Minimum load *1073*
1.16 Design of bearing arrangements *1073*
1.17 Mounting and dismounting *1074*
1.18 Legal notice regarding data freshness *1075*
1.19 Further information *1075*
Product tables *1076*
Axial needle roller and cage assemblies, axial bearing washers *1076*
Axial needle roller bearings with centring spigot *1078*

Matrix for bearing preselection

The matrix gives an overview of the types and design features.

It can be used to make a preliminary assessment of whether a bearing is fundamentally suitable for the envisaged application.

The additional information provided in the product chapter (see column "detailed information") and in the Technical principles must, however, be observed in addition to this overview in selection of the bearing.

+++ extremely suitable
++ highly suitable
+ suitable
(+) suitable with restrictions
– not suitable/not applicable
✓ available

Design features and suitability			Axial needle roller bearings	detailed information ➤ 1066
Load carrying capacity	radial		–	➤ *1069|1.2*
	axial, one direction		++	➤ *1069|1.2*
	axial, both directions		–	
	moments		–	
Compensation of angular misalignments	static		–	➤ *1069|1.3*
	dynamic		–	➤ *1069|1.3*
Bearing design	cylindrical bore		✓	➤ *1066|1.1*
	tapered bore		–	
	separable		✓	➤ *1066|1.1*
Lubrication	greased		–	➤ *1069|1.4*
Sealing	open		✓	➤ *1069|1.5*
	non-contact		–	
	contact		–	
Operating temperature in °C	from to		–20 +120	➤ *1070|1.8*
Suitability for	high speeds		++	➤ *1069|1.6*
	high running accuracy		–	➤ *1071|1.11* ➤ *115*
	low-noise running		+	➤ *1070|1.7* ➤ *27*
	high rigidity		+++	➤ *54*
	reduced friction		+++	➤ *56*
	length compensation within bearing		(+)	
	non-locating bearing arrangement		–	
	locating bearing arrangement		–	
X-life bearings			–	
Inner cage diameter D_{c1} in mm	from to		4 160	➤ *1076* ➤ *1078*
Product tables	from page ➤		1076	

1 Axial needle roller bearings

Axial needle roller bearings are particularly suitable where:

- high axial forces occur in one direction but no radial loads are present (the bearings may only be subjected to axial load ➤*1069*| *1.2*)
- the load carrying capacity of comparable axial deep groove ball bearings is no longer adequate and the very high axial load carrying capacity of axial cylindrical roller bearings is not yet necessary ➤*1066*| 🗀 *1*
- higher speeds occur in addition to high axial loads
- the bearing arrangement must have very high axial rigidity
- the axial space available is extremely small ➤*1066*| 🗀 *1*
- the bearing parts can or must be mounted separately
- the bearing arrangement is not configured but, for cost reasons, ready-to-fit standard bearings are to be used

For an overview of other product-specific features, see the Matrix for bearing preselection ➤*1065*.

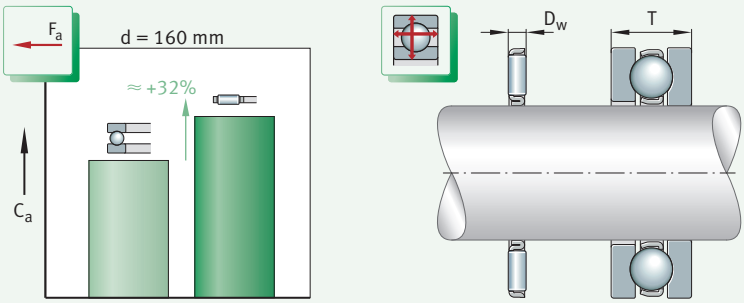

🗀 **1**
Axial needle roller bearing and axial deep groove ball bearing – comparison of load carrying capacity and design envelope

F_a = *axial load*
C_a = *basic dynamic load rating*
D_w = *diameter of needle roller*
T = *axial section height of axial deep groove ball bearing*

1.1 Bearing design

✎ *Design variants*

Axial needle roller bearings are available as:

- complete axial needle roller bearings (comprising a needle roller and cage assembly and axial bearing washers) ➤*1067*| 🗀 *2*
- individual bearing parts for combination, comprising:
  - axial needle roller and cage assembly (prefix AXK)
  - axial bearing washers (prefix AS) ➤*1068*| 🗀 *3*
- bearings with centring spigot (prefix AXW) ➤*1068*| 🗀 *4* and ➤*1068*| 🗀 *5*

Furthermore, Schaeffler supplies axial needle roller bearings by agreement for specific applications, for example with tabs to prevent rotation. Such bearings are used, due to their low axial section height, in applications such as automotive manual gearshift transmissions.

Axial needle roller bearings

Ready-to-fit bearing units with very small axial space

Axial needle roller bearings are part of the group of axial roller bearings. In contrast to the ball, the roller has a larger contact area perpendicular to the roller axis. As a result, it can transmit higher forces, has greater rigidity and allows smaller rolling element diameters under the same load. The single row, ready-to-fit bearings comprise flat, ribless axial bearing washers between which axial needle roller and cage assemblies are arranged ➤*1067*|*2*. Their axial section height corresponds only to the diameter of the needle rollers plus the thickness of the washers. Due to this design, the bearings are extremely small in axial height ➤*1078*|. The rolling elements are retained and guided by axial cages. The needle rollers are made from through hardened rolling bearing steel 100Cr6. They have a hardness of at least 670 HV and profiled ends, i.e. they have a slight lateral curvature towards the ends. The modified line contact between the needle rollers and raceways prevents damaging edge stresses. This in turn has a positive effect on the operating life of the bearings.

Due to the extensive possible combinations, the bearing parts for axial needle roller bearings are always supplied individually, i.e. the corresponding axial needle roller and cage assemblies and axial bearing washers in the product tables must always be ordered together ➤*1067*|*2*, ➤*1068*|*3*, ➤*1072*|*1.13* and ➤*1078*|.

2
Axial needle roller bearing

F_a = *axial load*

① *Axial bearing washers*
② *Axial needle roller and cage assembly*

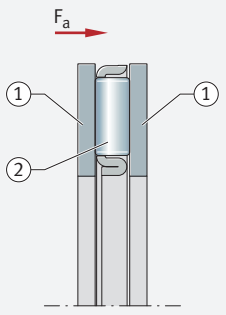

Axial needle roller and cage assemblies

The axial section height corresponds to the needle roller diameter

Axial needle roller and cage assemblies AXK comprise geometrically stable plastic or metal cages fitted with a large number of needle rollers ➤*1067*|*2*. Due to the high uniformity of diameter (the needle rollers are sorted to very small diameter tolerances) of the needle rollers with each other, this gives very uniform loading of the rolling elements ➤*1071*|*3*. Since the axial section height of the cage assemblies is determined purely by the needle roller diameter, the bearings require only an extremely small axial design space.

Suitable as a direct bearing arrangement or in conjunction with axial bearing washers

The axial needle roller and cage assemblies are generally combined with axial bearing washers ➤*1067*|*2* and ➤*1068*|*3*. If they are to be used directly – i.e. without these washers – in the adjacent construction, the raceway for the needle rollers must be produced as a rolling bearing raceway ➤*1073*|*1.16*.

Axial bearing washers

Suitable as shaft or housing locating washers

Axial bearing washers AS are suitable for axial needle roller and cage assemblies AXK. They are punched, through hardened, polished and suitable for use as shaft or housing locating washers. Housing locating washers are externally centred, shaft locating washers are internally centred ➤*1068*|*3* and ➤*1073*|*1.16*. They are used if the adjacent machine parts cannot be used as a raceway for the rolling elements but are sufficiently rigid and geometrically precise.

The use of complete axial needle roller bearings (axial needle roller and cage assembly AXK with axial bearing washers AS) is only appropriate, for example, if high speeds occur and the bearing washers must therefore be precisely centred or the running surfaces for the rolling elements cannot be configured as a rolling bearing raceway.

3
Axial bearing washers

① *Axial needle roller bearing, housing locating washer externally centred*
② *Axial needle roller bearing, shaft locating washer internally centred*

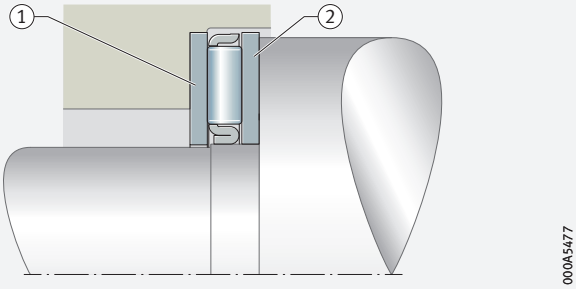

Axial bearings with centring spigot

The centring spigot gives simplified mounting of the bearings

Axial needle roller bearings AXW comprise a housing locating washer with a centring spigot into which an axial needle roller and cage assembly AXK is inserted. With the aid of the centring spigot, the housing locating washer can be precisely centred in the housing bore. This gives easier mounting of the bearings. The running surface for the needle roller and cage assembly must be produced as a rolling bearing raceway, i. e. it must be hardened and ground.

Suitable for the support of axial loads only

Axial bearings with a centring spigot can only support axial loads in one direction. In order to support combined radial/axial loads, however, these bearings can be combined with the following radial needle roller bearings:

- drawn cup needle roller bearings with open ends and with closed end (direct bearing arrangement) ➤ *1068* | *4*
- needle roller bearings with or without inner ring ➤ *1068* | *5*

Such combinations give very compact and economical bearing arrangements.

4
Needle roller axial bearings with centring spigot, combined with drawn cup needle roller bearings with open ends

F_a = *axial load*
F_r = *radial load*

① *Needle roller axial bearing AXW*
② *Drawn cup needle roller bearing with open endsHK (radial bearing)*
③ *Axial bearing washer AS*

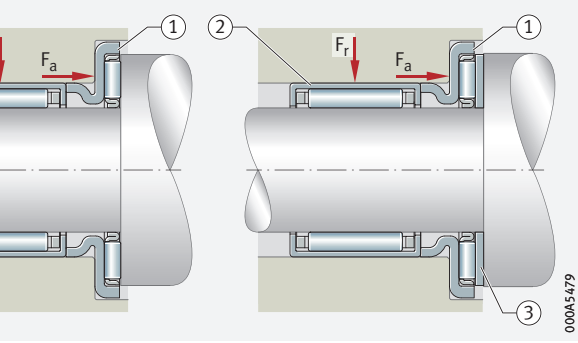

5
Needle roller axial bearings with centring spigot, combined with needle roller bearings

F_a = *axial load*
F_r = *radial load*

① *Needle roller axial bearing AXW*
② *Needle roller bearing without inner ring (radial bearing)*
③ *Needle roller bearing with inner ring (radial bearing)*

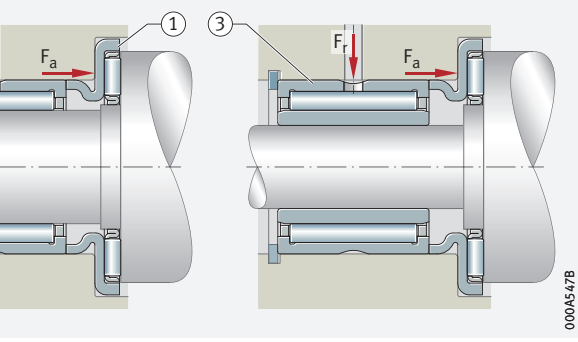

1.2 Load carrying capacity

For high axial loads acting in one direction

Single row axial needle roller bearings can support high axial loads as well as axial shock loads in one direction, but must not be subjected to radial load ➤*1072*|*1.14*. Radial loads must be supported by means of an additional bearing ➤*1068*|⧉*4* and ➤*1068*|⧉*5*.

1.3 Compensation of angular misalignments

The bearings do not permit any skewing between the shaft and housing. If angular misalignments occur between the locating surfaces on the shaft and in the housing, this will cause damage to the bearing and a reduction in its operating life.

1.4 Lubrication

Oil or grease lubrication is possible

Axial needle roller bearings and axial needle roller and cage assemblies are not greased. The bearings must be lubricated with oil or grease.

Compatibility with plastic cages

When using bearings with plastic cages, compatibility between the lubricant and the cage material must be ensured if synthetic oils, lubricating greases with a synthetic oil base or lubricants containing a high proportion of EP additives are used.

If there is any uncertainty regarding the suitability of the selected lubricant for the application, please consult Schaeffler or the lubricant manufacturer.

Observe oil change intervals

Aged oil and additives in the oil can impair the operating life of plastics at high temperatures. As a result, stipulated oil change intervals must be strictly observed.

1.5 Sealing

Provide seals in the adjacent construction

The bearings are not sealed; i.e. sealing of the bearing position must be carried out in the adjacent construction. This must reliably prevent:

- moisture and contaminants from entering the bearing
- the egress of lubricant from the bearing position

1.6 Speeds

Speeds in the product tables

The product tables generally give two speeds for the bearings:

- the kinematic limiting speed n_G
- the thermal speed rating $n_{\vartheta r}$

Limiting speeds

The limiting speed n_G is the kinematically permissible speed of the bearing. Even under favourable mounting and operating conditions, this value should not be exceeded without prior consultation with Schaeffler ➤*64*.

The values in the product tables are valid for oil lubrication.

Values for grease lubrication

For grease lubrication, 25% of the value stated in the product tables is permissible in each case.

Reference speeds

$n_{\vartheta r}$ is used to calculate n_{ϑ}

The thermal speed rating $n_{\vartheta r}$ is not an application-oriented speed limit, but is a calculated ancillary value for determining the thermally safe operating speed n_{ϑ} ➤*64*.

1.7 Noise

Schaeffler Noise Index

The Schaeffler Noise Index (SGI) is not yet available for this bearing type ➤*69*. The data for these bearing series will be introduced and updated in stages.

Further information:

- ***medias*** *https://medias.schaeffler.com*

1.8 Temperature range

✎ Limiting values

The operating temperature of the bearings is limited by:

- the dimensional stability of the bearing washers and needle rollers
- the cage
- the lubricant

Possible operating temperatures of axial needle roller bearings ➤*1070*|▦ *1*.

▦ **1**
Permissible temperature ranges

Operating temperature	Corrosion-resistant design (with Corrotect coating) or polyamide PA66	Bearings with sheet steel cage
	–20 °C to +120 °C	–20 °C to +120 °C

In the event of anticipated temperatures which lie outside the stated values, please contact Schaeffler.

1.9 Cages

✎ The standard cages are made from sheet steel

Standard cages ➤*1070*|▦ *2*. Other cage designs are available by agreement. With such cages, however, suitability for high speeds and temperatures as well as the basic load ratings may differ from the values for the bearings with standard cages.

For high continuous temperatures and applications with difficult operating conditions, bearings with sheet metal cages should be used. If there is any uncertainty regarding cage suitability, please consult Schaeffler.

▦ **2**
Cage, cage suffix, inner cage diameter

Bearing series	Solid cage made from polyamide PA66 TV	Sheet steel cage	Corrosion-resistant design (with Corrotect coating) RR
	Inner cage diameter		
AXK	up to 8	from 10	Available by agreement
AXW	–	from 10	Available by agreement

1.10 Internal clearance

✎ Axial clearance and preload are determined by the application

In the case of axial needle roller bearings, the internal clearance (axial clearance) is only achieved when the bearings are mounted. The requisite axial clearance of the bearing arrangement is dependent on the application and must take account of the conditions in the bearing arrangement while warm from operation and subjected to load. If axial needle roller bearings are subjected to vibrations while under predominantly static load, for example, they must be lightly preloaded. Preload can be applied, for example, using calibrated sheets (shims). Other suitable means include shaft nuts, disc springs etc. ➤*1073*|*1.15*. It must always be ensured that no slippage occurs in operation between the rolling elements and raceways ➤*1073*|*1.15*.

If there is any uncertainty regarding correct setting, please consult Schaeffler.

1.11 Dimensions, tolerances

Dimension standards

The main dimensions of axial needle roller bearings correspond to ISO 104:2015. The main dimensions of axial needle roller and cage assemblies correspond to DIN 5405-2:2016, while those of axial bearing washers correspond to DIN 5405-3:2016. Axial needle roller bearings with centring spigot are not standardised.

Tolerances

Axial bearing washers adapt to the accuracy of the abutment surface. They are flat under a minimum concentric load of 200 N.

Tolerances for the bore and outside diameter as well as for the width of the bearing parts ➤1071 | 3 and ➤1071 | 6.

The sort tolerances and sort intervals of the needle roller diameters correspond to ISO 3096:1996 or DIN 5402-3:2012, grade G2.

The diameter sort tolerance of the needle rollers in the axial needle roller and cage assemblies AXW is 2 µm.

3 *Tolerances of bearing parts*

Series	Bore		Outside diameter		Height	
		Tolerance class		Tolerance class		Deviations mm
AXK	D_{c1}	E11	D_c	c12	D_w	0 −0,01
AXW	D_{c1}	E12	–	–	B	0 −0,2
AS	d	E12	D	e12	B_1	±0,05

6 *Bearing parts*

① *Axial needle roller and cage assembly AXK*
② *Axial needle roller bearing AXW*
③ *Axial bearing washer AS*

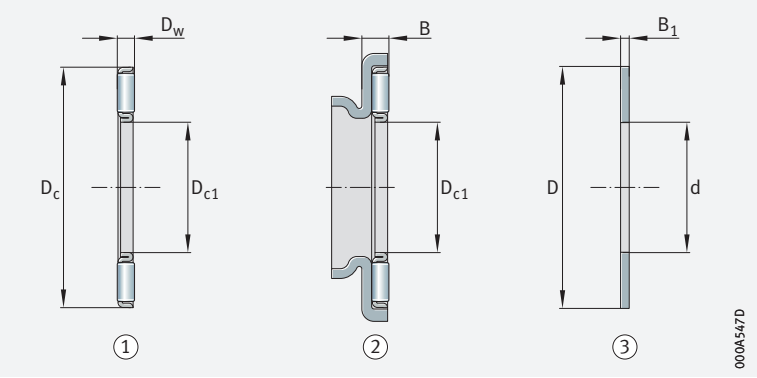

1.12 Suffixes

Suffixes describe the design and features of a bearing in more detail.

4 *Suffixes and corresponding descriptions*

Suffix	Description of suffix	
RR	Corrosion-resistant design, with Corrotect coating	Special design, available by agreement
TV	Plastic cage made from glass fibre reinforced polyamide PA66	Standard

1.13 Structure of bearing designation

With ***medias*** interchange, equivalent Schaeffler bearing designations can be determined for bearing designations from other rolling bearing manufacturers *https://www.schaeffler.de/std/1B69*.

Examples of composition of bearing designation

The designation of bearings follows a set model. Examples ➤*1072*|*7* and ➤*1072*|*8*. The composition of designations for axial needle roller and cage assemblies and axial bearing washers is subject to DIN 623-1 ➤*102*|*10*.

7
Axial needle roller bearing, comprising axial needle roller and cage assembly and axial bearing washers

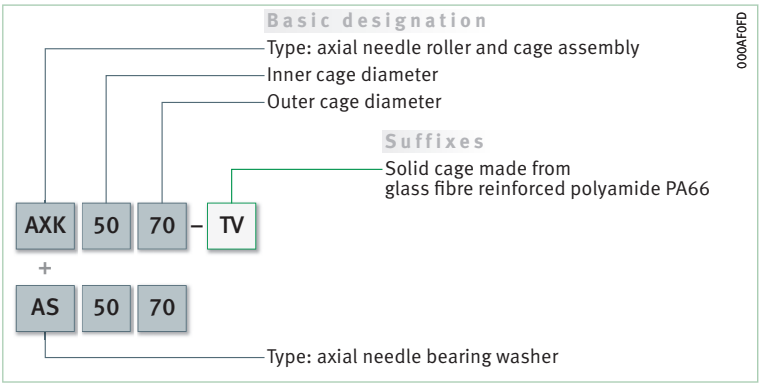

8
Axial needle roller bearing with centring spigot, combined with axial bearing washer and drawn cup needle roller bearing with open ends

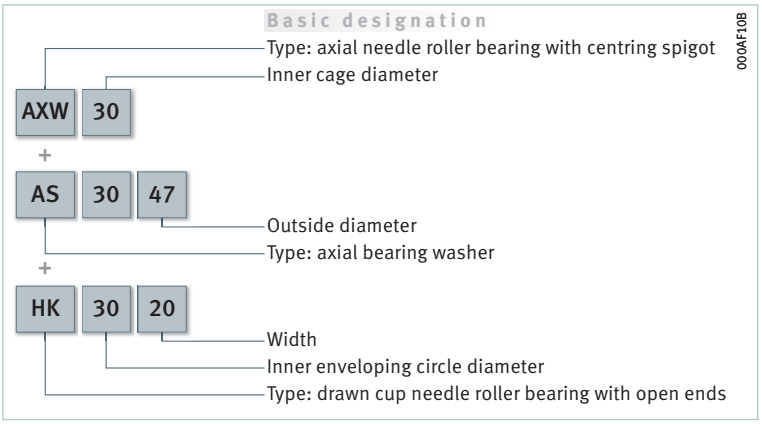

1.14 Dimensioning

Equivalent dynamic bearing load

Axial needle roller bearings can only support axial forces ➤*1069*|*1.2*. In the rating life equation, P is therefore substituted by the value for F_a ➤*1072*|*1*.

1
Equivalent dynamic load

$$P = F_a$$

Legend

P	N	Equivalent dynamic bearing load
F_a	N	Axial load.

Equivalent static bearing load

Combined loads are not possible

In relation to the direction of load, the same conditions apply as for the equivalent dynamic bearing load, i.e. combined loads are not permissible. In the rating life equation, P_0 is therefore substituted by the value for F_{0a} ➤*1073*|*2*.

*f*2
Equivalent static load

$$P_0 = F_{0a}$$

Legend

P_0	N	Equivalent static bearing load
F_{0a}	N	Largest axial load present (maximum load).

Static load safety factor

✎ $S_0 = C_0/P_0$

In addition to the basic rating life L (L_{10h}), it is also always necessary to check the static load safety factor S_0 ➤*1073| f 3*.

*f*3
Static load safety factor

$$S_0 = \frac{C_0}{P_0}$$

Legend

S_0	–	Static load safety factor
C_0	N	Basic static load rating
P_0	N	Equivalent static bearing load.

1.15 Minimum load

✎ Rolling bearings under low loads are particularly prone to slippage

In order to prevent slippage damage, the bearing must be subjected to a minimum axial load $F_{a\,min}$ ➤*1073| f 4*. In vertical bearing arrangements in particular, the requisite minimum axial load $F_{a\,min}$ is normally achieved, however, simply by the weight of the bearing parts and the external forces. If this is not the case, the bearing arrangement must be preloaded, for example by means of springs or a shaft nut ➤*1070| 1.10*.

*f*4
Minimum axial load

$$F_{a\,min} = 0{,}0005 \cdot C_{0a} + k_a \left(\frac{C_{0a} \cdot n}{10^8} \right)^2$$

Legend

$F_{a\,min}$	N	Minimum axial load
C_{0a}	N	Basic static load rating, axial
k_a	–	Factor for determining the minimum load; $k_a = 3$
n	min^{-1}	Speed.

1.16 Design of bearing arrangements

Design of adjacent parts

Axial needle roller bearings cannot tolerate angular misalignments ➤*1069| 1.3*. The locating surfaces for the bearing parts on the shaft and in the housing must therefore be vertical to the shaft axis, while the adjacent parts must be rigid and flat. They must be configured such that the bearing washers are supported as far as possible over the whole circumference and over the whole raceway width.

Running surfaces of rolling elements in direct bearing arrangements with needle roller and cage assemblies

✎ Produce the running surfaces as a rolling bearing raceway

For the very smallest axial design space, axial needle roller and cage assemblies can also run directly (i. e. without axial bearing washers) on the adjacent construction. In this case – and if the load carrying capacity of the axial needle roller and cage assemblies is to be fully utilised – the raceways on the shaft and in the housing must be produced as a rolling bearing raceway or must correspond to the quality and hardness of axial bearing washers. When designing the raceway on the shaft and in the housing, the raceway dimensions E_a and E_b of axial needle roller and cage assemblies must be observed ➤*1076|*. If the values are observed, this will ensure that the raceways for the needle rollers – taking account of any possible axial offset of the needle roller and cage assembly – are adequately dimensioned.

Raceway design

Design of running surfaces:
- raceway hardness 670 HV to 840 HV
- radial cage guidance surfaces Ramax 0,8 (Rzmax 4)
- surface hardening depth SHD ≧ 140 · $D_w/R_{p0,2}$
  - SHD = surface hardening depth in mm
  - D_w = rolling element diameter in mm
  - $R_{p0,2}$ = proof stress in N/mm²
- roughness Ramax 0,2 (Rzmax 1)
- raceway dimensions E_a and E_b according to the product tables must be observed
- total axial runout tolerances to ISO tolerance grade IT5 (for special requirements IT4) relative to the inside diameter of the axial needle roller and cage assemblies D_{c1} must be observed

Tolerances for shaft and housing bore

Proven tolerances are given in ➤*1074*|▦ *5*. If the data are observed, this will give correct radial guidance of the bearing elements.

▦ **5**
Tolerances for shafts and housing bores

Bearing component		Tolerance class[1] for	
		Shaft	Bore
AXK	Shaft guided	h8	–
AS	Externally centred as housing locating washer	Shaft released	H9
	Internally centred as shaft locating washer	h8	Bore released

[1] *The envelope requirement Ⓔ applies.*

Tolerances for the centring spigot in the housing bore

Where axial needle roller bearings AXW are to be combined with drawn cup needle roller bearings with open ends or closed end, or with needle roller bearings, the bore tolerances selected for the bore of the centring spigot in the housing must be the same as for the radial bearings ➤*1066*|*1.1*, ➤*1068*|⧉ *4* and ➤*1068*|⧉ *5*.

Release and guidance of bearing parts

Release of shaft and housing locating washers

If the bearing washers are centred on the shaft, they must have radial clearance in the housing bore while, if they are centred in the housing, there must be radial clearance between the washer bore and the shaft ➤*1074*|▦ *5*.

Guidance of axial needle roller and cage assemblies

In order to achieve the lowest possible sliding speeds on the guidance surfaces, the axial needle roller and cage assemblies are generally guided on the shaft. This is particularly important in the case of high speeds.

1.17 Mounting and dismounting

The mounting and dismounting options for the bearings must be taken into consideration in the design of the bearing position.

As the bearings are not self-retaining, they are easy to mount

Axial needle roller bearings are not self-retaining. As a result, the bearing parts can be mounted separately from each other. This gives simplified mounting of the bearings.

Mounting position of bearing washers

The axial bearing washers AS must be suitable as a raceway on both sides, i.e. either side of the washer can face towards the needle rollers.

Schaeffler Mounting Handbook

Rolling bearings must be handled with great care

Rolling bearings are well-proven precision machine elements for the design of economical and reliable bearing arrangements, which offer high operational security. In order that these products can function correctly and achieve the envisaged operating life without detrimental effect, they must be handled with care.

The Schaeffler Mounting Handbook MH 1 gives comprehensive information about the correct storage, mounting, dismounting and maintenance of rotary rolling bearings *https://www.schaeffler.de/std/1D53*. It also provides information which should be observed by the designer, in relation to the mounting, dismounting and maintenance of bearings, in the original design of the bearing position. This book is available from Schaeffler on request.

1.18 Legal notice regarding data freshness

The further development of products may also result in technical changes to catalogue products

Of central interest to Schaeffler is the further development and optimisation of its products and the satisfaction of its customers. In order that you, as the customer, can keep yourself optimally informed about the progress that is being made here and with regard to the current technical status of the products, we publish any product changes which differ from the printed version in our electronic product catalogue.

We therefore reserve the right to make changes to the data and illustrations in this catalogue. This catalogue reflects the status at the time of printing. More recent publications released by us (as printed or digital media) will automatically precede this catalogue if they involve the same subject. Therefore, please always use our electronic product catalogue to check whether more up-to-date information or modification notices exist for your desired product.

Link to electronic product catalogue

The following link will take you to the Schaeffler electronic product catalogue: *https://medias.schaeffler.com*.

1.19 Further information

In addition to the data in this chapter, the following chapters in Technical principles must also be observed in the design of bearing arrangements:

- Determining the bearing size ➤*34*
- Rigidity ➤*54*
- Friction and increases in temperature ➤*56*
- Speeds ➤*64*
- Bearing data ➤*97*
- Lubrication ➤*70*
- Sealing ➤*185*
- Design of bearing arrangements ➤*141*
- Mounting and dismounting ➤*194*

Axial needle roller and cage assemblies
Axial bearing washers

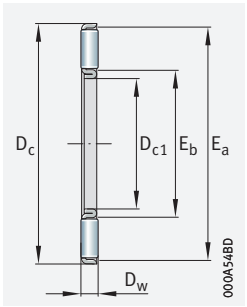

AXK

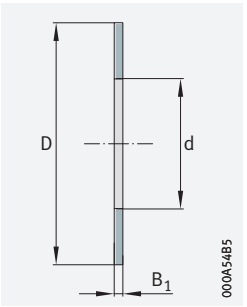

AS

D_{c1} = 4 – 160 mm

Main dimensions				Basic load ratings		Fatigue limit load	Limiting speed	Speed rating
D_{c1} d	D_c D	D_w	B_1	dyn. C_a N	stat. C_{0a} N	C_{ua} N	n_G min^{-1}	$n_{\vartheta r}$ min^{-1}
4	14	2	1	4 400	8 000	960	21 500	15 100
5	15	2	1	4 750	9 200	1 090	20 600	13 100
6	19	2	1	6 800	15 500	1 610	18 900	11 000
8	21	2	1	7 800	19 400	2 010	17 800	8 900
10	24	2	1	9 200	25 500	2 550	16 900	7 400
12	26	2	1	9 900	29 000	2 950	15 200	6 500
15	28	2	1	11 300	36 000	3 650	13 200	4 950
17	30	2	1	11 900	39 500	4 000	12 100	4 500
20	35	2	1	13 100	46 500	4 800	10 500	4 350
25	42	2	1	14 700	58 000	6 000	8 400	3 700
30	47	2	1	16 300	70 000	7 200	7 300	3 100
35	52	2	1	17 800	81 000	8 400	6 500	2 700
40	60	3	1	28 000	114 000	12 100	5 600	2 340
45	65	3	1	30 000	128 000	13 600	5 100	2 100
50	70	3	1	32 000	143 000	15 100	4 700	1 890
55	78	3	1	38 000	186 000	20 700	4 250	1 730
60	85	3	1	44 500	234 000	27 000	3 900	1 550
65	90	3	1	46 500	255 000	29 000	3 650	1 430
70	95	4	1	54 000	255 000	27 000	3 450	1 400
75	100	4	1	55 000	265 000	28 500	3 250	1 340
80	105	4	1	56 000	280 000	30 000	3 100	1 260
85	110	4	1	58 000	290 000	31 000	2 950	1 200
90	120	4	1	73 000	405 000	45 000	2 700	1 100
100	135	4	1	91 000	560 000	59 000	2 420	970
110	145	4	1	97 000	620 000	64 000	2 230	880
120	155	4	1	102 000	680 000	69 000	2 070	800
130	170	5	1	133 000	840 000	77 000	1 900	750
140	180	5	1	138 000	900 000	80 000	1 780	700
150	190	5	1	143 000	960 000	84 000	1 680	660
160	200	5	1	148 000	1 020 000	88 000	1 590	620

medias *https://www.schaeffler.de/std/1F9A*

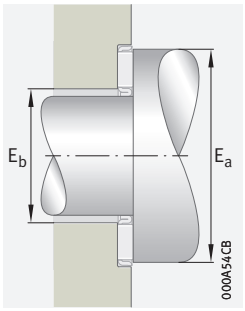

Mounting dimensions/raceway dimensions for direct bearing arrangement

	Axial needle roller and cage assemblies		Axial bearing washers		Raceway dimensions	
	Mass	Designation ➤*1071|1.12* ➤*1072|1.13*	Mass	Designation ➤*1071|1.12* ➤*1072|1.13*		
d D_{c1}	m ≈ g		m ≈ g		E_b	E_a
4	0,7	**AXK0414-TV**	1	**AS0414**	5	13
5	0,8	**AXK0515-TV**	1	**AS0515**	6	14
6	1	**AXK0619-TV**	2	**AS0619**	7	18
8	2	**AXK0821-TV**	2	**AS0821**	9	20
10	3	**AXK1024**	3	**AS1024**	12	23
12	3	**AXK1226**	3	**AS1226**	14	25
15	4	**AXK1528**	3	**AS1528**	17	27
17	4	**AXK1730**	4	**AS1730**	19	29
20	5	**AXK2035**	5	**AS2035**	22	34
25	7	**AXK2542**	7	**AS2542**	29	41
30	8	**AXK3047**	8	**AS3047**	34	46
35	10	**AXK3552**	9	**AS3552**	39	51
40	16	**AXK4060**	12	**AS4060**	45	58
45	18	**AXK4565**	13	**AS4565**	50	63
50	20	**AXK5070**	14	**AS5070**	55	68
55	28	**AXK5578**	18	**AS5578**	60	76
60	33	**AXK6085**	22	**AS6085**	65	83
65	35	**AXK6590**	24	**AS6590**	70	88
70	60	**AXK7095**	25	**AS7095**	74	93
75	61	**AXK75100**	27	**AS75100**	79	98
80	63	**AXK80105**	28	**AS80105**	84	103
85	67	**AXK85110**	29	**AS85110**	89	108
90	86	**AXK90120**	39	**AS90120**	94	118
100	104	**AXK100135**	50	**AS100135**	105	133
110	122	**AXK110145**	55	**AS110145**	115	143
120	131	**AXK120155**	59	**AS120155**	125	153
130	205	**AXK130170**	65	**AS130170**	136	167
140	219	**AXK140180**	79	**AS140180**	146	177
150	232	**AXK150190**	84	**AS150190**	156	187
160	246	**AXK160200**	89	**AS160200**	166	197

Axial needle roller bearings

With centring spigot

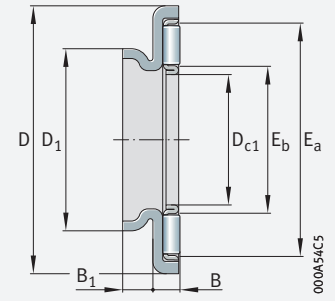

AXW

D_{c1} = 10 – 50 mm

Main dimensions			Basic load ratings		Fatigue limit load	Limiting speed	Speed rating	Mass	Designation
D_{c1}	D	B	dyn. C_a N	stat. C_{0a} N	C_{ua} N	n_G min^{-1}	$n_{\vartheta r}$ min^{-1}	m ≈ g	➤*1071* | *1.12* ➤*1072* | *1.13*
10	27	3,2	9 200	25 500	2 550	16 900	9 300	8,3	**AXW10**
12	29	3,2	9 900	29 000	2 950	15 200	8 100	9,1	**AXW12**
15	31	3,2	11 300	36 000	3 650	13 200	6 200	10	**AXW15**
17	33	3,2	11 900	39 500	4 000	12 100	5 600	11	**AXW17**
20	38	3,2	13 100	46 500	4 800	10 500	5 300	14	**AXW20**
25	45	3,2	14 700	58 000	6 000	8 400	4 350	20	**AXW25**
30	50	3,2	16 300	70 000	7 200	7 300	3 650	22	**AXW30**
35	55	3,2	17 800	81 000	8 400	6 500	3 150	27	**AXW35**
40	63	4,2	28 000	114 000	12 100	5 600	2 700	39	**AXW40**
45	68	4,2	30 000	128 000	13 600	5 100	2 400	43	**AXW45**
50	73	4,2	32 000	143 000	15 100	4 700	2 160	49	**AXW50**

medias *https://www.schaeffler.de/std/1F9A*

Combination with radial needle roller bearings, drawn cup needle roller bearings with open ends, drawn cup needle roller bearings with closed end

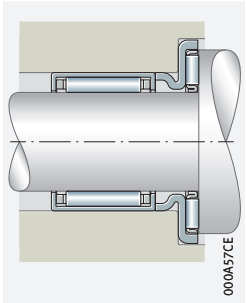

AXW with HK

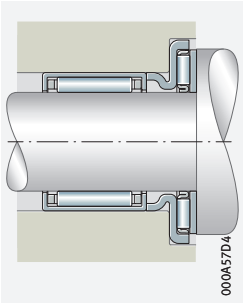

AXW with AS and HK

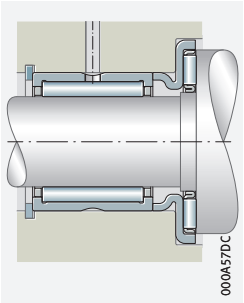

AXW with NK, NKS, RNA49, RNA69

Dimensions			Raceway dimensions		Axial bearing washers ➤1076	Drawn cup needle roller bearings with open ends		Drawn cup needle roller bearings with closed end	Needle roller bearings	
D_{c1}	D_1	B_1	E_b	E_a	AS	HK	HK..-RS	BK	NK, NKS, RNA49, RNA69	NKI, NKIS, NA49, NA69
10	14	3	12	23	AS1024	HK1010 HK1012 HK1015	–	BK1010 BK1012 BK1015	NK7/10-TV NK7/12-TV	–
12	16	3	14	25	AS1226	HK1210	–	BK1210	NK9/12-TV NK9/16-TV	NKI6/12-TV NKI6/16-TV
15	21	3,5	17	27	AS1528	HK1512 HK1516 HK1522-ZW	HK1514-RS	BK1512 BK1516	–	–
17	23	3,5	19	29	AS1730	HK1712	–	–	NK15/16 NK15/20	–
20	26	3,5	22	34	AS2035	HK2012 HK2016 HK2020 HK2030-ZW	HK2018-RS	BK2016 BK2020	NK18/16 NK18/20	–
25	32	4	29	41	AS2542	HK2512 HK2516 HK2520 HK2526 HK2538-ZW	HK2518-RS	BK2520 BK2526 BK2538-ZW	NK24/16 NK24/20 NKS20	NKI20/16 NKI20/20
30	37	4	34	46	AS3047	HK3012 HK3016 HK3020 HK3026 HK3038-ZW	HK3018-RS	BK3012 BK3016 BK3020 BK3026 BK3038-ZW	NK28/20 NK28/30 NKS24 RNA4904 RNA6904	NA4904 NA6904
35	42	4	39	51	AS3552	HK3512 HK3516 HK3520	HK3518-RS	BK3520	NK32/20-TV NK32/30 NKS28 RNA4905 RNA6905	NKIS20 NA4905 NA6905 NKI28/20-TV NKI28/30
40	47	4	45	58	AS4060	HK4012 HK4016 HK4020	HK4018-RS	BK4020	NK37/20 NK37/30 NKS32 RNA4906 RNA6906	NKIS25 NA4906 NA6906 NKI32/20 NKI32/30
45	52	4	50	63	AS4565	HK4516 HK4520	HK4518-RS	BK4520	NK42/20 NK42/30 NKS37 RNA49/32 RNA69/32-ZW	NKIS30 NA49/32 NA69/32-ZW
50	58	4,5	55	68	AS5070	HK5020 HK5025	HK5022-RS	–	NKS43	NKIS35

Axial spherical roller bearings





Matrix for bearing preselection ____ *1083*

1 Axial spherical roller bearings ____ 1084

1.1 Bearing design ____ *1084*
1.2 Load carrying capacity ____ *1086*
1.3 Compensation of angular misalignments ____ *1087*
1.4 Lubrication ____ *1087*
1.5 Sealing ____ *1088*
1.6 Speeds ____ *1088*

FAG

1.7 Noise ____ *1088*
1.8 Temperature range ____ *1089*
1.9 Cages ____ *1089*
1.10 Internal clearance ____ *1089*
1.11 Dimensions, tolerances ____ *1090*
1.12 Suffixes ____ *1090*
1.13 Structure of bearing designation ____ *1091*
1.14 Dimensioning ____ *1092*
1.15 Minimum load ____ *1093*
1.16 Design of bearing arrangements ____ *1094*
1.17 Mounting and dismounting ____ *1095*
1.18 Legal notice regarding data freshness ____ *1096*
1.19 Further information ____ *1096*

Product tables

Axial spherical roller bearings ____ *1098*

Matrix for bearing preselection

The matrix gives an overview of the types and design features.

It can be used to make a preliminary assessment of whether a bearing is fundamentally suitable for the envisaged application.

The additional information provided in the product chapter (see column "detailed information") and in the Technical principles must, however, be observed in addition to this overview in selection of the bearing.

Design features and suitability			Axial spherical roller bearings	
+++ extremely suitable ++ highly suitable + suitable (+) suitable with restrictions – not suitable/not applicable ✓ available				detailed information ➤ 1084
Load carrying capacity	radial		+	➤ 1086 | 1.2
	axial, one direction		+++	➤ 1086 | 1.2
	axial, both directions		–	➤ 1086 | 1.2
	moments		–	
Compensation of angular misalignments	static		+++	➤ 1087 | 1.3
	dynamic		+	➤ 1087 | 1.3
Bearing design	cylindrical bore		✓	➤ 1084 | 1.1
	tapered bore		–	
	separable		✓	➤ 1095 | 1.17
Lubrication	greased		–	➤ 1087 | 1.4
Sealing	open		✓	➤ 1088 | 1.5
	non-contact		–	➤ 1088 | 1.5
	contact		–	➤ 1088 | 1.5
Operating temperature in °C	from to		–30 +200	➤ 1089 | 1.8
Suitability for	high speeds		+	➤ 1088 | 1.6
	high running accuracy		+	➤ 1090 | 1.11 ➤ 115
	low-noise running		(+)	➤ 1088 | 1.7 ➤ 27
	high rigidity		++	➤ 54
	reduced friction		++	➤ 56
	length compensation within bearing		–	
	non-locating bearing arrangement		–	
	locating bearing arrangement		(+)	➤ 141
X-life bearings			✓	➤ 1085
Bearing bore d in mm	from to		60 1600	➤ 1098
Product tables	from page ➤		1098	

1 Axial spherical roller bearings

Axial spherical roller bearings are suitable where:

- bearing arrangements are subjected to high and very high axial loads ➤*1086|1.2*
- dynamic or static misalignments of the shaft relative to the housing, or deflections of the shaft, must be compensated by the bearing under axial loads ➤*1087|1.3*
- radial loads occur in addition to axial forces (maximum 55% of F_a) ➤*1086|1.2*
- a relatively high speed suitability is required in addition to a high load carrying capacity ➤*1088|1.6*
- high shock type loads must be supported
- bearing parts are to be mounted separately (the bearings are not self-retaining) ➤*1084|1.1*

For an overview of other product-specific features, see the Matrix for bearing preselection ➤*1083*.

1
Axial spherical roller bearing: comparison of load carrying capacity with axial deep groove ball bearing, compensation of misalignments

F_a = *axial load*
C_a = *basic axial dynamic load rating*

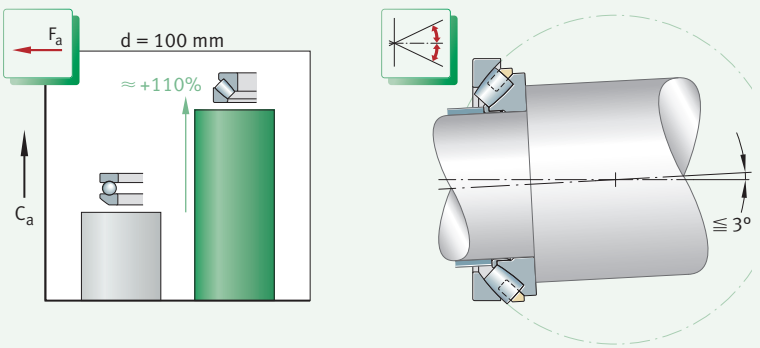

1.1 Bearing design

✎ *Design variants*

Axial spherical roller bearings are available in the basic design as:

- an increased capacity design with sheet steel cage or solid brass cage ➤*1085|2*

✎ *X-life bearings*

The bearings are available in the majority of sizes as X-life bearings ➤*1085|3*.

The bearing design is dependent on the bearing series and the bearing size. It essentially differs in the configuration and guidance of the cage ➤*1089|1.9*.

Bearings of basic design

The raceway in the housing locating washer has a curved form

Axial spherical roller bearings are part of the group of axial roller bearings. These single row, non-self-retaining rolling bearings comprise solid shaft and housing locating washers with raceways for the rolling elements. Cages guide the large number of asymmetrical barrel rollers ➤*1089*|*1.9*. The cage, roller and cage assembly, and shaft locating washer form a self-retaining unit. The raceways are arranged oblique to the bearing axis, the raceway in the housing locating washer is of a concave design. This design allows these bearings to combine a range of characteristics, which are essential to many applications, in one bearing, such as angular adjustability for example ➤*1087*|*1.3*.

Roller contact design

The stress distribution at the contact points between the rollers and raceways is determined by the contact surface of the rollers. As a result, the roller geometry is matched to the raceway. This gives a favourable load distribution over the entire length of the roller and thus prevents both edge stresses and stress peaks at the ends of the roller.

Increased capacity design with sheet steel cage or solid brass cage

Bearings with sheet steel cage

Bearings without a cage suffix have coated sheet steel cages, which are guided by rollers ➤*1085*|*2* and ➤*1089*|*1.9*. These designs are available as X-life bearings ➤*1085*.

Bearings with solid brass cage

Bearings with the cage suffix MB have solid brass cages that are guided on the shaft locating washer or by the rollers ➤*1085*|*2* and ➤*1089*|*1.9*. The MB design is also available in numerous sizes as X-life bearings ➤*1085*.

2
Axial spherical roller bearings of basic design

F_r = radial load
F_a = axial load

① *Increased capacity design, with sheet steel cage*
② *Increased capacity design, with solid brass cage*

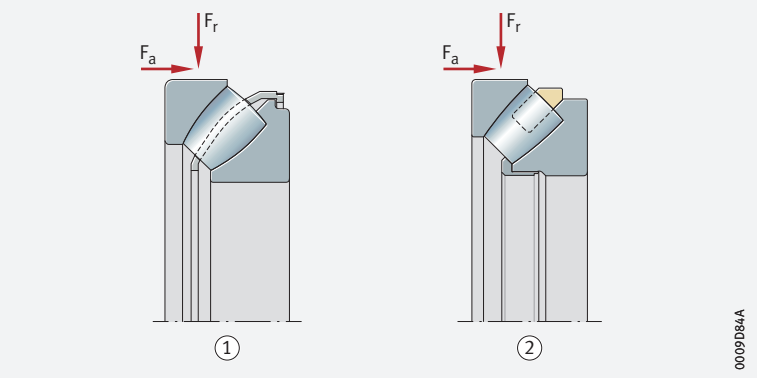

X-life premium quality

X-life bearings exhibit considerably higher performance than conventional axial spherical roller bearings. This is achieved, for example, through the modified internal construction, the optimised contact geometry between the rollers and raceways, the new cage design, a higher steel quality, better surface quality and optimised roller guidance and lubricant film formation.

3
Axial spherical roller bearing in X-life design

① *Cage*
② *Barrel roller*
③ *Housing locating washer*
④ *Shaft locating washer*



Advantages

Increased customer benefits due to X-life

These technical enhancements offer a range of advantages, such as:

- a more favourable load distribution in the bearing and thus a higher dynamic load carrying capacity of the bearings
- downsizing possible, increased performance density
- a higher fatigue limit load
- a higher running accuracy and smooth running
- running with reduced friction and greater energy efficiency
- lower heat generation in the bearing
- higher possible speeds
- lower lubricant consumption and therefore longer maintenance intervals if relubrication is carried out
- a measurably longer operating life of the bearings
- high operational security
- compact, environmentally-friendly bearing arrangements

Lower operating costs, higher machine availability

In conclusion, these advantages improve the overall cost-efficiency of the bearing position significantly and thus bring about a sustainable increase in the efficiency of the machine and equipment.

Suffix XL

X-life axial spherical roller bearings include the suffix XL in the designation ➤*1090*|*1.12* and ➤*1098*|.

Areas of application

Wide application range

Due to their special technical features, X-life axial spherical roller bearings are highly suitable for bearing arrangements in:

- refiners and worm extruders in the pulp and paper industry
- drilling rigs and roll pressers in the cement industry, mining and raw material processing
- work rolls and back-up rolls in cold rolling mills
- extruder gearboxes in chemical plant and refineries
- air preheaters in thermal power stations
- POD and azimuth drives in marine propulsion systems

X-life indicates a high product performance density and thus a particularly significant benefit to the customer. Further information on X-life ➤*10*.

1.2 Load carrying capacity

Designed for very high axial loads and high radial loads

Axial spherical roller bearings can support very high axial loads in one direction and – since the raceways are inclined relative to the bearing axis – radial loads acting simultaneously. They are designed for very high load carrying capacity and, since they have the maximum possible number of large and long barrel rollers, are also suitable for the heaviest loads.

As a result of the inclined raceways, the load is transmitted from one raceway to the other oblique to the bearing axis ➤*1087*|*4*. Due to the optimised osculation conditions between the rollers and raceways, uniform stress distribution is achieved in the bearing.

The radial load (F_r, F_{0r}) must not exceed 55% of the axial load ➤*1092*|*1* and ➤*1092*|*2*.

4
Force flow under axial load

The load is transmitted from one raceway to the other oblique to the bearing axis.

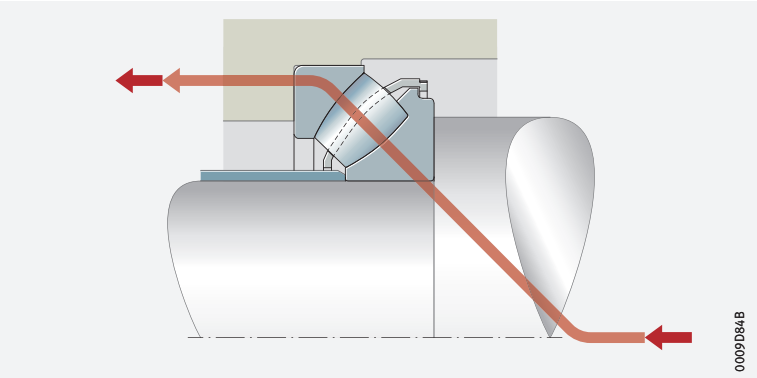

1.3 Compensation of angular misalignments

Axial spherical roller bearings compensate dynamic and static angular misalignments

Due to the concave rolling element raceway in the housing locating washer, axial spherical roller bearings are capable of angular adjustment. As a result, they permit skewing between the shaft locating washer and housing locating washer within certain limits, without causing damage to the bearings or impairing their function. In this way, they can compensate misalignment, shaft deflection and housing deformation ➤*1087*|▦ *1*. The extent to which these table values can be used in practice is, however, essentially dependent on the design of the bearing arrangement, the type of seal and other factors.

Permissible adjustment angle

The adjustment angles given in the table are permissible under the following conditions:

- P or $P_0 \leqq 0{,}05 \cdot C_{0a}$.
- The angular deviation is constant (static angular misalignment).
- The rotating component is the shaft locating washer

▦ **1**
Permissible skewing under static misalignment

D = *bearing outside diameter*

Bearing series	Permissible skewing	
	D < 320 mm	D ≧ 320 mm
292..-E1	1,5°	1°
293..-E1	2,5°	1,5°
294..-E1	3°	2°

If the rotating component is the housing locating washer or the shaft locating washer undergoes tumbling motion, the angular adjustment facility is smaller. In such cases, please consult Schaeffler.

1.4 Lubrication

Oil lubrication is predominantly used

Axial spherical roller bearings are not greased. They are generally lubricated using oil. In some cases, lubrication with greases containing EP additives is also possible. In this instance, however, it must be ensured that the contact points between the rollers and the guidance rib are always adequately supplied with grease. This is best achieved if the bearing is completely filled with grease and regularly relubricated.

Pay attention to the pumping action in bearings with oil lubrication

Due to their internal construction, a pumping action occurs in bearings with an asymmetrical cross-section. This pumping action, which is heavily dependent on the circumferential speed, can be used under certain conditions to generate oil recirculation in the bearing ➤*1088*|⧉ *5*. The pumping action is present in bearing arrangements with a horizontal and vertical shaft and must be taken into account when selecting the lubrication and sealing method.

The volume flow generated by the bearings can easily reach a throughput of $>$ 50 l/min. In order to give appropriate possibilities for compensation, ducts for the purposes of oil return must therefore be included in the housing ➤*1088*|*5*.

If there is any uncertainty regarding the suitability of the selected lubricant for the application, please consult Schaeffler or the lubricant manufacturer.

5
Oil recirculation by means of pumping action, ducts for the purposes of oil return

① *Bearing arrangement with horizontal shaft*
② *Bearing arrangement with vertical shaft*

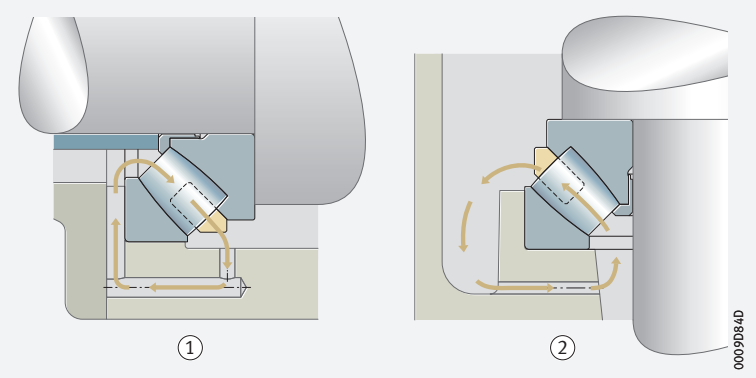

1.5 Sealing

The bearings are of an open design; provide seals in the adjacent construction

Axial spherical roller bearings are supplied without seals. In the case of unsealed bearings, sealing of the bearing position must be carried out in the adjacent construction. The sealing system should reliably prevent:

- moisture and contaminants from entering the bearing
- the egress of lubricant from the bearing position

1.6 Speeds

Speeds in the product tables

The achievable operating speed is dependent on the application, the associated loads and the lubrication.

The product tables generally give two speeds for the bearings:

- the kinematic limiting speed n_G
- the thermal speed rating $n_{\vartheta r}$

Limiting speeds

The limiting speed n_G is the kinematically permissible speed of the bearing. Even under favourable mounting and operating conditions, this value should not be exceeded without prior consultation with Schaeffler ➤*64*.

Reference speeds

$n_{\vartheta r}$ is used to calculate n_ϑ

The thermal speed rating $n_{\vartheta r}$ is not an application-oriented speed limit, but is a calculated ancillary value for determining the thermally safe operating speed n_ϑ ➤*64*.

1.7 Noise

Schaeffler Noise Index

The Schaeffler Noise Index (SGI) is not yet available for this bearing type ➤*69*. The data for these bearing series will be introduced and updated in stages.

Further information:

- ***medias*** *https://medias.schaeffler.com*

1.8 Temperature range

Limiting values

The operating temperature of the bearings is limited by:

- the dimensional stability of the bearing rings and rolling elements
- the cage
- the lubricant

Possible operating temperatures of axial spherical roller bearings ➤*1089*|▦ *2*.

▦ **2**
Permissible temperature ranges

Operating temperature	Axial spherical roller bearings with sheet steel or brass cage
	–30 °C to +200 °C, limited by the lubricant

In the event of anticipated temperatures which lie outside the stated values, please contact Schaeffler.

1.9 Cages

Sheet steel cages or solid brass cages are used as standard

Axial spherical roller bearings essentially differ in terms of their cage design ➤*1085*|⧉ *2*. The design is dependent on the bearing series and the bearing size ➤*1089*|▦ *3*. Sheet steel cages do not have a cage suffix in the designation ➤*1089*|▦ *3*. The cages have a high strength. They are suitable for high temperatures and all conventional lubricants.

If there is any uncertainty regarding cage suitability for a specific application, please consult Schaeffler.

▦ **3**
Cage, cage suffix, bore code

Bearing series	Sheet steel cage	Solid brass cage MB
	Bore code	
292..-E1	–	30 to /1180
293..-E1-XL	17 to 64	68 to /800
293..-E1	–	/850 to /1600
294..-E1-XL	12 to 68	72 to /710
294..-E1	–	/750 to /1060

1.10 Internal clearance

The possible preload is determined by the application

In the case of axial spherical roller bearings, the axial preload is achieved when the bearings are mounted. The requisite preload is dependent on the application and must take account of the conditions in the bearing arrangement while warm from operation and subjected to load. It must always be ensured that no slippage occurs in operation between the rolling elements and raceways. A specific minimum axial load $F_{a\,min}$ must be acting on axial spherical roller bearings at all times ➤*1093*|*1.15*.

If there is any uncertainty regarding preload, please consult Schaeffler.

1.11 Dimensions, tolerances

Dimension standards

The main dimensions of axial spherical roller bearings correspond to ISO 104:2015 and DIN 728:1991.

Chamfer dimensions

The limiting dimensions for chamfer dimensions correspond to DIN 620-6:2004. Overview and limiting values ➤ *140*.
Nominal value of chamfer dimension ➤ *1098*.

Tolerances

The dimensional and running tolerances of shaft and housing locating washers correspond to the tolerance class Normal in accordance with ISO 199:2014 ➤ *135* to ➤ *137* *25* to *28*.

Restricted section height tolerance

The tolerances for section height T are considerably restricted for all axial spherical roller bearings compared to the standard values ➤ *1090* *4* and ➤ *1098*.

4 *Tolerances for bearing section height*

Nominal bore diameter mm		Deviation of bearing section height T µm	
over	incl.	upper	lower
50	80	0	−100
80	120	0	−100
120	180	0	−125
180	250	0	−125
250	315	0	−150
315	400	0	−200
400	500	0	−420
500	630	0	−500
630	800	0	−630
800	1 000	0	−800
1 000	1 250	0	−1 000
1 250	1 600	0	−1 200

1.12 Suffixes

Suffixes describe the design and features of a bearing in more detail.

5 *Suffixes and corresponding descriptions*

Suffix	Description of suffix	
E1	Increased capacity design	Standard
MB	Solid brass cage	
N1	One retaining slot in the housing locating washer	
N2	Two retaining slots offset by 180° in the housing locating washer	
THI	3 uniformly distributed threaded holes in one end face of the shaft locating washer	
THIE	3 uniformly distributed threaded holes in one end face of the shaft locating washer, incl. suitable eye bolts	
THO	3 uniformly distributed threaded holes in one end face of the housing locating washer	
THOE	3 uniformly distributed threaded holes in one end face of the housing locating washer, incl. suitable eye bolts	
XL	X-life bearing	

1.13 Structure of bearing designation

With ***medias*** interchange, equivalent Schaeffler bearing designations can be determined for bearing designations from other rolling bearing manufacturers *https://www.schaeffler.de/std/1B69*.

Examples of composition of bearing designation

The designation of bearings follows a set model. Examples ➤*1091*|*6* and ➤*1091*|*7*. The composition of designations is subject to DIN 623-1 ➤*102*|*10*.

6
Axial spherical roller bearing, X-life design: designation structure

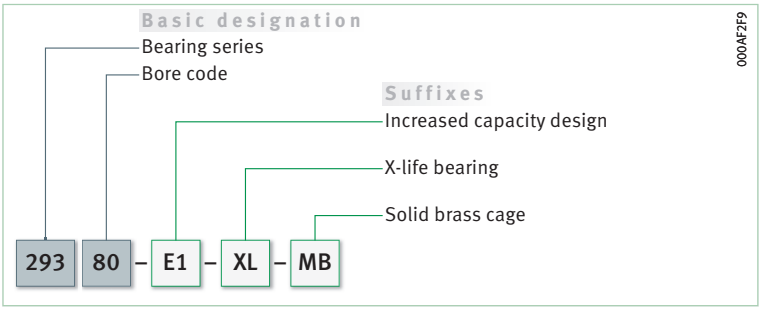

7
Axial spherical roller bearing, X-life design, with retaining slot and threaded holes: designation structure

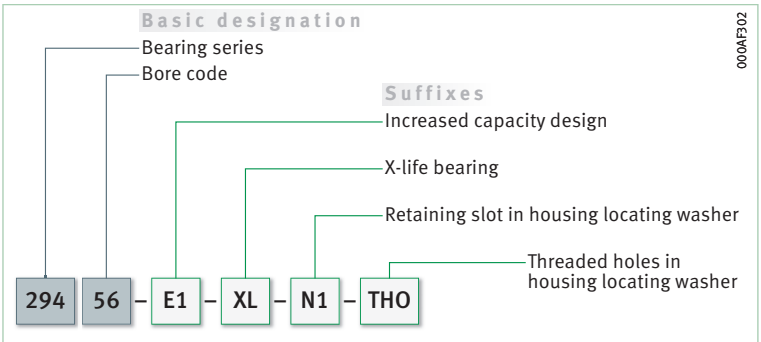

1.14 Dimensioning

Equivalent dynamic bearing load

✎ *P = a substitute force for combined load and various load cases*

The basic rating life equation $L = (C/P)^p$ used in the dimensioning of bearings under dynamic load assumes a load of constant magnitude and direction. In axial bearings, this is a purely axial and concentrically acting load. If this condition is not met, an equivalent dynamic bearing load P must be determined for the rating life calculation. In the case of axial bearings,
this is a concentrically acting axial load of constant magnitude and direction, which has the same effect on the rating life as the load occurring in practice. Calculation ➤ *1092* | *1*.

1
Equivalent dynamic load

$$P = F_a + 1{,}2 \cdot F_r$$

Legend

P	N	Equivalent dynamic bearing load
F_r	N	Radial load
F_a	N	Axial load.

The radial bearing load F_r must not exceed 55% of the axial load F_a:
$F_r \leqq 0{,}55 \cdot F_a$

Equivalent static bearing load

For axial spherical roller bearings subjected to static load ➤ *1092* | *2*.

2
Equivalent static load

$$P_0 = F_{0a} + 2{,}7 \cdot F_{0r}$$

Legend

P_0	N	Equivalent static bearing load
F_{0r}, F_{0a}	N	Largest radial or axial load present (maximum load).

The radial bearing load F_{0r} must not exceed 55% of the axial load F_{0a}:
$F_{0r} \leqq 0{,}55 \cdot F_{0a}$

Static load safety factor

In addition to the basic rating life $L(L_{10h})$, it is also always necessary to check the static load safety factor S_0. The following values must be observed here ➤ *1092* | *6*. Calculation of S_0 ➤ *1092* | *3*.

3
Static load safety factor

$$S_0 = \frac{C_0}{P_0}$$

Legend

S_0	–	Static load safety factor
C_0	N	Basic static load rating
P_0	N	Equivalent static bearing load.

6
Values for static load safety factor

Static load safety factor S_0	Conditions
$S_0 \geqq 8$	Axial support by the abutment shoulders in accordance with the product tables (d_a and D_a) ➤ *1098*
$S_0 \geqq 6$	Full axial support of the housing and shaft locating washers by the entire mating surface, dimensions D_1 and d_1 ➤ *1098*
$S_0 \geqq 4$	Full axial support, dimensions D_1 and d_1 ➤ *1098* together with good radial support of the housing locating washer (housing tolerance K7)

1.15 Minimum load

Rolling bearings under low loads are particularly prone to slippage

If the lubricant film is interrupted between the rolling elements and raceways as a result of slippage, the contact partners will come into contact at high relative velocity and the wear in the bearing will increase abruptly. The risk of slippage is particularly high where bearings are subjected to low loads. In order to prevent slippage damage and guarantee kinematics, a minimum axial load $F_{a\,min}$ must therefore be applied to the bearing ➤*1093*| *4* and ➤*1093*| *7*.

Preload the bearings, if the minimum axial load is not achieved

In vertical bearing arrangements in particular, the requisite minimum axial load $F_{a\,min}$ is normally already achieved by the weight of the supported parts and the external forces. If this is not the case, the bearing arrangement must be preloaded, for example by means of springs or a shaft nut ➤*1093*| *8* and ➤*1089*| *1.10*. The minimum axial load must be ensured in all operating modes.

8
Minimum axial load applied to an axial spherical roller bearing by means of spring preload

① *Pressure springs distributed uniformly around the circumference of the housing locating washer*

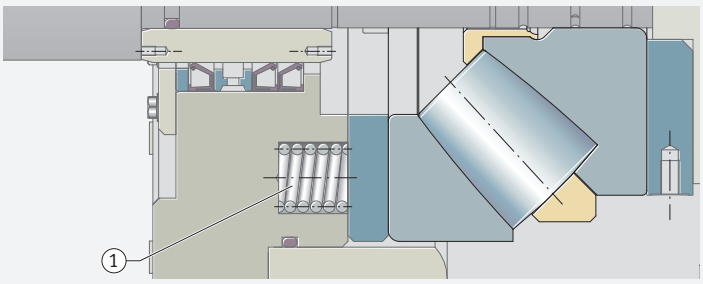

4
Minimum axial load

$$F_{a\,min} = 0{,}0005 \cdot C_{0a} + k_a \left(\frac{C_{0a} \cdot n}{10^8} \right)^2$$

Legend

$F_{a\,min}$	N	Minimum axial load
C_{0a}	N	Basic static load rating ➤*1098*
k_a	–	Factor for determining the minimum load ➤*1093*| *7*
n	min^{-1}	Speed.

7
Factor k_a for calculating the minimum axial load

Bearing series	Factor k_a
292..-E1	0,6
293..-E1	0,9
294..-E1	0,7

1.16 Design of bearing arrangements

Design of adjacent parts

Support bearing washers over the circumference and width

The adjacent parts to the shaft and housing locating washers must be rigid, flat and perpendicular to the axis of rotation. They must be configured such that the bearing washers are supported over the whole circumference and over the whole raceway width; in particular, this must be observed under high loads. The axial runout tolerances of the contact surfaces for axial spherical roller bearings should be designed to IT5 or better ➤ *1094* | 8.

The housing bore must have a recess with a diameter $D_{b\ min}$ above the housing locating washer, otherwise the rollers may graze the housing in the event of shaft misalignments ➤ *1094* | 9. Dimensions for $D_{b\ min}$ ➤ *1098*.

E1 = bearings with new internal construction

Due to the new internal construction of the E1 bearings, attention must be paid to the mounting dimensions. This also applies to the configuration of the spacer sleeve on the shaft locating washer (dimensions d_b, d_{b1}) ➤ *1098*.

9
Release in the housing and maximum height of spacer sleeve

$D_{b\ min}$ = *minimum dimension of recess in the housing*
d_{max} = *maximum height of spacer sleeve*
① *Spacer sleeve*

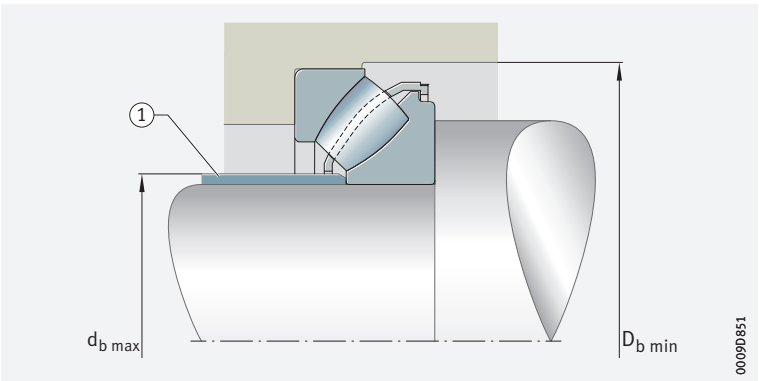

8
Numerical values for ISO standard tolerances (IT grades) to ISO 286-1:2010

IT grade	Nominal dimension in mm					
	over	50	80	120	180	250	315
	incl.	80	120	180	250	315	400
	Values in µm						
IT5		13	15	18	20	23	25

continued ▼

8
Numerical values for ISO standard tolerances (IT grades) to ISO 286-1:2010

IT grade	Nominal dimension in mm					
	over	400	500	630	800	1000	1250
	incl.	500	630	800	1000	1250	1600
	Values in µm						
IT5		27	32	36	40	47	55

continued ▲

Tolerances for shaft and housing bore

Observe point or circumferential load of bearing washers

Fits for the bearing rings of axial spherical roller bearings, as a function of the condition of rotation ➤ *1095*| *9*. The conditions of rotation for shaft and housing locating washers must be taken into consideration when defining the fits (point or circumferential load).

9
Conditions of rotation and fits

Adjacent part	Type of load	Operating conditions	Tolerance class[1)]
Shaft	Combined load	Point load for shaft locating washer	j6
		Circumferential load for shaft locating washer, shaft diameter up to 200 mm	j6 (k6)
		Circumferential load for shaft locating washer, shaft diameter from 200 mm	k6 (m6)
Housing	Axial load	Normal load	E8
		High load	G7
	Combined load	Point load for housing locating washer	H7
		Circumferential load for housing locating washer	K7

1) *The envelope requirement Ⓔ applies.*

If there is any uncertainty regarding the design of adjacent parts, please consult Schaeffler.

1.17 Mounting and dismounting

The mounting and dismounting options for the bearings must be taken into consideration in the design of the bearing position.

As the bearings are not self-retaining, they are easy to mount

Axial spherical roller bearings are not self-retaining.
As a result, the bearing parts can be mounted separately from each other. This gives simplified mounting of the bearings.

Schaeffler Mounting Handbook

Rolling bearings must be handled with great care

Rolling bearings are well-proven precision machine elements for the design of economical and reliable bearing arrangements, which offer high operational security. In order that these products can function correctly and achieve the envisaged operating life without detrimental effect, they must be handled with care.

The Schaeffler Mounting Handbook MH 1 gives comprehensive information about the correct storage, mounting, dismounting and maintenance of rotary rolling bearings *https://www.schaeffler.de/std/1D53*.
It also provides information which should be observed by the designer, in relation to the mounting, dismounting and maintenance of bearings, in the original design of the bearing position. This book is available from Schaeffler on request.

1.18 Legal notice regarding data freshness

✎ The further development of products may also result in technical changes to catalogue products

Of central interest to Schaeffler is the further development and optimisation of its products and the satisfaction of its customers. In order that you, as the customer, can keep yourself optimally informed about the progress that is being made here and with regard to the current technical status of the products, we publish any product changes which differ from the printed version in our electronic product catalogue.

§ We therefore reserve the right to make changes to the data and illustrations in this catalogue. This catalogue reflects the status at the time of printing. More recent publications released by us (as printed or digital media) will automatically precede this catalogue if they involve the same subject. Therefore, please always use our electronic product catalogue to check whether more up-to-date information or modification notices exist for your desired product.

Link to electronic product catalogue

The following link will take you to the Schaeffler electronic product catalogue: *https://medias.schaeffler.com*.

1.19 Further information

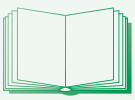

In addition to the data in this chapter, the following chapters in Technical principles must also be observed in the design of bearing arrangements:

- Determining the bearing size ➤*34*
- Rigidity ➤*54*
- Friction and increases in temperature ➤*56*
- Speeds ➤*64*
- Bearing data ➤*97*
- Lubrication ➤*70*
- Sealing ➤*185*
- Design of bearing arrangements ➤*141*
- Mounting and dismounting ➤*194*



Axial spherical roller bearings

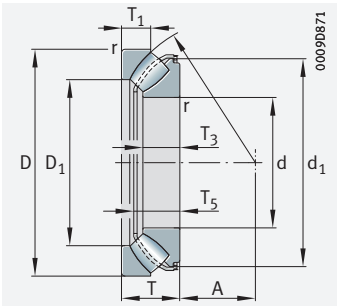

With sheet steel cage

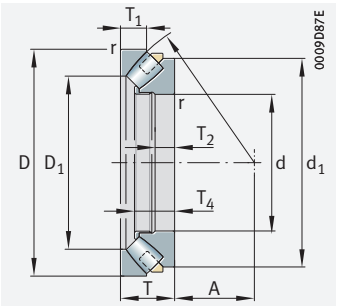

With solid brass cage

d = 60 – 190 mm

Main dimensions			Basic load ratings		Fatigue limit load	Limiting speed	Speed rating	Mass	Designation
d	D	T	dyn. C_a	stat. C_{0a}	C_{ua}	n_G	$n_{\vartheta r}$	m	➤*1090*|*1.12* ➤*1091*|*1.13* X-life ➤*1085*
			N	N	N	min^{-1}	min^{-1}	≈ kg	
60	130	42	410 000	940 000	117 000	6 000	2 850	2,5	**29412-E1-XL**
65	140	45	495 000	1 160 000	139 000	5 500	2 600	3,1	**29413-E1-XL**
70	150	48	550 000	1 290 000	154 000	5 000	2 430	3,8	**29414-E1-XL**
75	160	51	650 000	1 540 000	179 000	4 700	2 260	4,6	**29415-E1-XL**
80	170	54	720 000	1 720 000	199 000	4 350	2 140	5,5	**29416-E1-XL**
85	150	39	420 000	1 110 000	158 000	4 850	2 260	2,7	**29317-E1-XL**
	180	58	800 000	1 910 000	224 000	4 100	2 010	6,5	**29417-E1-XL**
90	155	39	420 000	1 130 000	164 000	4 650	2 140	2,8	**29318-E1-XL**
	190	60	880 000	2 130 000	244 000	3 850	1 920	7,5	**29418-E1-XL**
100	170	42	495 000	1 340 000	194 000	4 200	1 960	3,6	**29320-E1-XL**
	210	67	1 060 000	2 600 000	290 000	3 400	1 740	10,1	**29420-E1-XL**
110	190	48	620 000	1 760 000	235 000	3 750	1 830	5,2	**29322-E1-XL**
	230	73	1 260 000	3 150 000	350 000	3 100	1 600	12,8	**29422-E1-XL**
120	210	54	800 000	2 210 000	290 000	3 350	1 700	7,2	**29324-E1-XL**
	250	78	1 470 000	3 700 000	400 000	2 800	1 460	15,9	**29424-E1-XL**
130	225	58	900 000	2 600 000	325 000	3 100	1 590	8,8	**29326-E1-XL**
	270	85	1 700 000	4 350 000	460 000	2 600	1 360	21	**29426-E1-XL**
140	240	60	1 010 000	2 900 000	365 000	2 900	1 490	10,3	**29328-E1-XL**
	280	85	1 720 000	4 500 000	495 000	2 460	1 290	22,1	**29428-E1-XL**
150	215	39	425 000	1 720 000	207 000	3 150	1 540	4,4	**29230-E1-MB**
	250	60	1 020 000	2 900 000	385 000	2 750	1 400	10,5	**29330-E1-XL**
	300	90	2 000 000	5 300 000	560 000	2 290	1 180	27,2	**29430-E1-XL**
160	225	39	420 000	1 720 000	218 000	3 000	1 450	4,7	**29232-E1-MB**
	270	67	1 220 000	3 550 000	445 000	2 500	1 320	14	**29332-E1-XL**
	320	95	2 240 000	6 000 000	630 000	2 120	1 090	32,1	**29432-E1-XL**
170	240	42	470 000	1 940 000	242 000	2 800	1 390	5,8	**29234-E1-MB**
	280	67	1 230 000	3 500 000	455 000	2 390	1 260	14,2	**29334-E1-XL**
	340	103	2 550 000	6 900 000	700 000	1 990	1 020	39,6	**29434-E1-XL**
180	250	42	485 000	2 070 000	255 000	2 650	1 350	6,1	**29236-E1-MB**
	300	73	1 460 000	4 300 000	530 000	2 240	1 170	18,4	**29336-E1-XL**
	360	109	2 850 000	7 700 000	770 000	1 860	940	47,6	**29436-E1-XL**
190	270	48	600 000	2 500 000	300 000	2 440	1 300	8,5	**29238-E1-MB**
	320	78	1 680 000	4 850 000	600 000	2 070	1 090	22,3	**29338-E1-XL**
	380	115	3 100 000	8 500 000	870 000	1 750	910	54,6	**29438-E1-XL**

medias *https://www.schaeffler.de/std/1F9A*

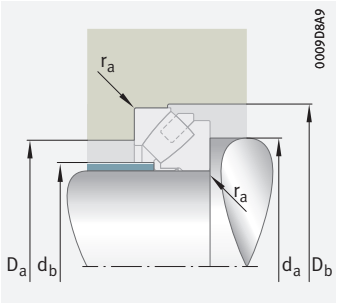

Mounting dimensions

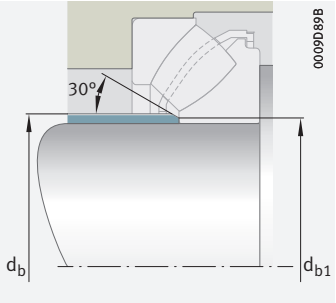

With sheet steel cage
Mounting dimensions

Dimensions										Mounting dimensions					
d	D_1	d_1	r min.	T_1	T_2	T_3	T_4	T_5 ≈	A	d_a min.	D_a max.	D_b min.	d_b max.	d_{b1} max.	r_a max.
60	85,5	116,5	1,5	21	–	27	–	37,5	38	95	107	133	67	–	1,5
65	91,5	125,2	2	22	–	29,5	–	40,5	42	100	115	143	72	–	2
70	99	133,8	2	23,8	–	31	–	42,5	44,8	110	124	153	78,5	–	2
75	105,5	142,3	2	24,5	–	33,5	–	46	47	115	132	163	82,5	–	2
80	112,5	150,9	2,1	26,5	–	35	–	48,5	50	125	141	173	88	–	2,1
85	109,5	138,5	1,5	20	–	24,5	–	34,5	50	120	129	153	92	–	1,5
	121	159,3	2,1	28	–	37	–	51	54	130	150	183	94	–	2,1
90	115	142,3	1,5	19,5	–	24,5	–	34,5	52	125	135	158	97	–	1,5
	127,5	167,7	2,1	28,5	–	39	–	54	56	135	158	193	99,5	–	2,1
100	127,5	156	1,5	20,5	–	26,2	–	37,5	58	135	148	173	107	–	1,5
	141,5	184,5	3	32	–	43	–	59,5	62	150	175	214	110,5	–	2,5
110	140	175,6	2	24,8	–	30,3	–	42	64	150	165	193	120	–	2
	155,5	201,9	3	34,7	–	47	–	64,5	69	165	192	234	129	121	2,5
120	154	192,6	2,1	27	–	34	–	48	70	165	182	213	129	–	2,1
	171	218,8	4	36,5	–	50,5	–	70	74	180	210	254	142	132	3
130	165,5	207,9	2,1	30,1	–	36,7	–	50,5	76	180	195	228	143	139	2,1
	184,5	240	4	40,9	–	54	–	75	81	195	227	275	153	143	3
140	177	220,6	2,1	30	–	38,5	–	53,5	82	190	208	244	154	149	2,1
	194,5	251,1	4	41	–	54	–	74,5	86	205	237	285	162	154	3
150	176	200	1,5	20,5	14	25	37	–	82	185	193	219	157	–	1,5
	190	228,4	2,1	28	–	38	–	54,5	87	195	220	254	163	159	2,1
	207,5	267,4	4	43,4	–	58	–	80,5	92	220	253	306	175	164	3
160	188	210	1,5	20	14	25	37	–	87	195	204	229	168	–	1,5
	203	248	3	33	–	42	–	59,5	92	215	236	274	176	170	2,5
	223,5	283,5	5	45,5	–	60,5	–	84,5	99	235	271	326	189	176	4
170	201	225	1,5	22	15	26	40	–	93	205	218	244	180	–	1,5
	215	255,7	3	30,5	–	42,2	–	60,5	96	220	247	284	188	180	2,5
	236	305	5	50	–	65,5	–	89,5	104	250	288	346	199	186	4
180	208	235	1,5	22	15	26	40	–	97	215	226	254	190	–	1,5
	227	274,5	3	35,5	–	46	–	64,5	103	235	263	304	195	190	2,5
	250	315,5	5	53	–	69,5	–	96	110	265	305	366	210	197	4
190	226	255	2	25,5	17	29	45	–	103	230	243	274	203	–	2
	243,5	290,1	4	36	–	49	–	70	110	250	281	325	211	201	3
	264,5	340	5	55,5	–	73	–	100,9	117	280	322	386	223	209	4

Axial spherical roller bearings

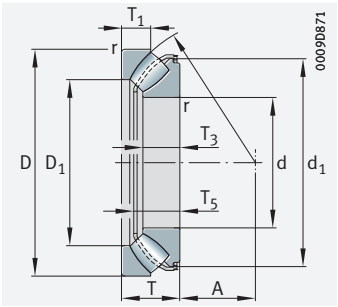

With sheet steel cage *With solid brass cage*

d = 200 – 380 mm

Main dimensions			Basic load ratings		Fatigue limit load	Limiting speed	Speed rating	Mass	Designation
d	D	T	dyn. C_a	stat. C_{0a}	C_{ua}	n_G	$n_{\vartheta r}$	m	➤*1090*|*1.12* ➤*1091*|*1.13* X-life ➤*1085*
			N	N	N	min^{-1}	min^{-1}	≈ kg	
200	280	48	650 000	2 650 000	320 000	2 340	1 280	9	**29240-E1-MB**
	340	85	1 900 000	5 600 000	670 000	1 940	1 030	27,3	**29340-E1-XL**
	400	122	3 450 000	9 500 000	950 000	1 660	860	63,7	**29440-E1-XL**
220	300	48	690 000	3 000 000	355 000	2 170	1 160	9,8	**29244-E1-MB**
	360	85	1 990 000	6 200 000	730 000	1 820	950	30,6	**29344-E1-XL**
	420	122	3 500 000	10 000 000	1 020 000	1 560	790	69	**29444-E1-XL**
240	340	60	1 010 000	4 150 000	470 000	1 890	1 060	16,9	**29248-E1-MB**
	380	85	2 040 000	6 500 000	770 000	1 710	880	32,8	**29348-E1-XL**
	440	122	3 600 000	10 500 000	1 080 000	1 470	740	74,1	**29448-E1-XL**
260	360	60	1 040 000	4 550 000	510 000	1 780	970	17,6	**29252-E1-MB**
	420	95	2 550 000	8 300 000	930 000	1 540	790	45,8	**29352-E1-XL**
	480	132	4 400 000	13 200 000	1 310 000	1 350	660	96,6	**29452-E1-XL**
280	380	60	1 020 000	4 700 000	530 000	1 670	900	19	**29256-E1-MB**
	440	95	2 650 000	8 800 000	980 000	1 460	740	49,1	**29356-E1-XL**
	520	145	5 200 000	15 800 000	1 500 000	1 230	600	126	**29456-E1-XL**
300	420	73	1 400 000	6 200 000	660 000	1 500	830	29,9	**29260-E1-MB**
	480	109	3 200 000	10 500 000	1 160 000	1 320	680	65,1	**29360-E1-XL**
	540	145	5 200 000	16 200 000	1 550 000	1 180	570	130	**29460-E1-XL**
320	440	73	1 410 000	6 500 000	690 000	1 420	780	31,6	**29264-E1-MB**
	500	109	3 350 000	11 000 000	1 210 000	1 260	650	72,4	**29364-E1-XL**
	580	155	6 000 000	19 100 000	1 790 000	1 090	530	163	**29464-E1-XL**
340	460	73	1 410 000	6 600 000	720 000	1 350	740	33,3	**29268-E1-MB**
	540	122	3 750 000	12 600 000	1 390 000	1 150	600	101	**29368-E1-XL-MB**
	620	170	7 200 000	23 100 000	2 090 000	1 020	475	208	**29468-E1-XL**
360	500	85	1 870 000	8 500 000	890 000	1 230	690	49	**29272-E1-MB**
	560	122	3 750 000	13 000 000	1 430 000	1 110	570	105	**29372-E1-XL-MB**
	640	170	6 800 000	21 900 000	2 060 000	970	470	230	**29472-E1-XL-MB**
380	520	85	2 000 000	9 000 000	950 000	1 180	660	50,3	**29276-E1-MB**
	600	132	4 500 000	15 400 000	1 650 000	1 030	530	136	**29376-E1-XL-MB**
	670	175	7 200 000	24 200 000	2 200 000	930	445	260	**29476-E1-XL-MB**

medias *https://www.schaeffler.de/std/1F9A*

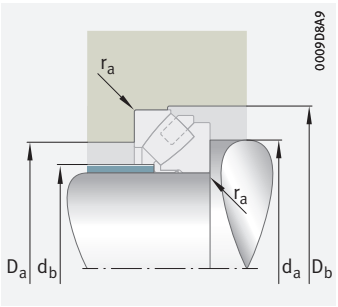

Mounting dimensions

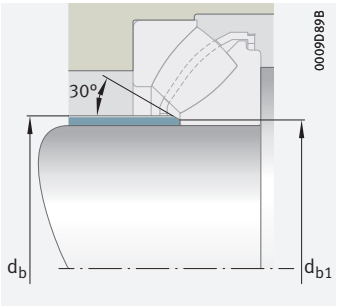

With sheet steel cage
Mounting dimensions

Dimensions										Mounting dimensions					
d	D_1	d_1	r min.	T_1	T_2	T_3	T_4	T_5 ≈	A	d_a min.	D_a max.	D_b min.	d_b max.	d_{b1} max.	r_a max.
200	232,5	265	2	24	17	30	45	–	108	240	258	284	209	–	2
	257	308,8	4	40	–	53,5	–	75,5	116	265	298	348	224	213	3
	277,5	360	5	59,4	–	77	–	106,9	122	295	338	406	234	220	4
220	251,5	285	2	24,5	17	30	45	–	117	260	277	304	229	–	2
	275,5	331,8	4	41	–	55	–	75,8	125	285	316	368	240	231	3
	300	379,8	6	58,5	–	77	–	107,5	132	315	360	428	254	241	5
240	283	320	2,1	30	22	37	57	–	130	290	311	344	250	–	2,1
	295,5	350,6	4	40,5	–	54	–	76,1	135	305	337	390	259	252	3
	322	400	6	59	–	76	–	106,9	142	335	381	448	276	261	5
260	302	340	2,1	30	22	38	57	–	139	310	331	365	271	–	2
	324	387,7	5	46	–	61	–	85,2	148	340	372	430	286	275	4
	346	435	6	63	–	86	–	118,9	154	365	419	488	296	280	5
280	323	360	2,1	30	22	38	57	–	150	330	351	385	293	–	2
	343	406,5	5	45,5	–	62	–	86,1	158	355	394	450	305	293	4
	372	473,1	6	70	–	95	–	130,5	166	395	446	530	320	302	5
300	353	395	3	38	26	44	69	–	162	360	386	426	315	–	2,5
	372	439,6	5	51	–	70	–	97,9	168	385	429	490	329	318	4
	392	490	6	70	–	95	–	129,5	175	420	471	550	340	324	5
320	372	415	3	38	26	44,5	69	–	172	380	406	450	336	–	2,5
	391	460	5	53	–	68	–	96,6	180	405	449	510	347	333	4
	422	534,4	7,5	74,5	–	102	–	139,7	191	445	507	590	367	346	6
340	395	435	3	37	26	45	69	–	183	400	427	470	356	–	2,5
	428	500	5	59,5	44	75	117	–	192	440	484	550	365	–	4
	445	564,9	7,5	84	–	112	–	151,3	201	480	541	630	386	364	6
360	423	470	4	44	31	51	81	–	194,5	430	461	510	379	–	3
	448	520	5	59,5	44	75	117	–	202	455	504	572	385	–	4
	474	585	7,5	83,5	63	110	164	–	210	500	560	650	388	–	6
380	441	490	4	42	31	51,5	81	–	202	445	480	530	394	–	3
	477	555	6	63,5	48	83	127	–	216	485	538	612	404	–	5
	494	615	7,5	87,5	67	115	168	–	222	530	587	682	413	–	6

Axial spherical roller bearings

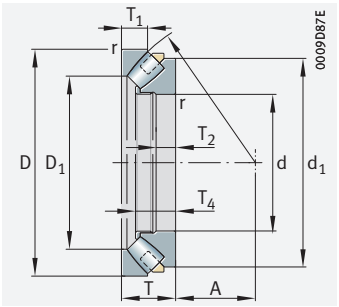

With solid brass cage

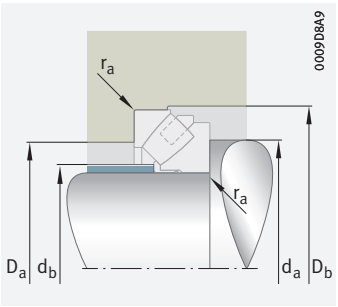

Mounting dimensions

d = 400 – 670 mm

Main dimensions			Basic load ratings		Fatigue limit load	Limiting speed	Speed rating	Mass	Designation
d	D	T	dyn. C_a	stat. C_{0a}	C_{ua}	n_G	$n_{\vartheta r}$	m	➤ *1090* | *1.12* ➤ *1091* | *1.13* X-life ➤ *1085*
			N	N	N	min^{-1}	min^{-1}	≈ kg	
400	540	85	2 040 000	9 600 000	990 000	1 130	620	52,6	**29280-E1-MB**
	620	132	4 550 000	16 300 000	1 720 000	990	500	142	**29380-E1-XL-MB**
	710	185	8 200 000	26 500 000	2 440 000	870	425	308	**29480-E1-XL-MB**
420	580	95	2 460 000	11 100 000	1 130 000	1 040	600	70,3	**29284-E1-MB**
	650	140	5 000 000	17 500 000	1 850 000	940	480	163	**29384-E1-XL-MB**
	730	185	8 200 000	28 500 000	2 550 000	840	395	325	**29484-E1-XL-MB**
440	600	95	2 500 000	12 400 000	1 200 000	1 010	560	77,1	**29288-E1-MB**
	680	145	5 200 000	18 300 000	1 930 000	890	470	185	**29388-E1-XL-MB**
	780	206	9 700 000	32 500 000	2 900 000	780	375	418	**29488-E1-XL-MB**
460	620	95	2 550 000	12 200 000	1 240 000	970	540	77,6	**29292-E1-MB**
	710	150	5 900 000	21 400 000	2 160 000	850	430	207	**29392-E1-XL-MB**
	800	206	9 800 000	33 500 000	3 000 000	760	360	435	**29492-E1-XL-MB**
480	650	103	2 650 000	13 700 000	1 330 000	920	520	97,5	**29296-E1-MB**
	730	150	5 800 000	21 400 000	2 190 000	820	415	219	**29396-E1-XL-MB**
	850	224	11 700 000	39 500 000	3 450 000	710	335	531	**29496-E1-XL-MB**
500	670	103	2 750 000	14 700 000	1 400 000	890	495	102	**292/500-E1-MB**
	750	150	5 900 000	22 000 000	2 250 000	800	400	228	**293/500-E1-XL-MB**
	870	224	11 600 000	40 000 000	3 500 000	690	325	551	**294/500-E1-XL-MB**
530	710	109	3 000 000	15 400 000	1 520 000	830	475	120	**292/530-E1-MB**
	800	160	6 800 000	25 500 000	2 550 000	740	375	274	**293/530-E1-XL-MB**
	920	236	12 700 000	44 500 000	3 850 000	650	305	653	**294/530-E1-XL-MB**
560	750	115	3 450 000	18 100 000	1 710 000	790	440	142	**292/560-E1-MB**
	980	250	14 600 000	51 000 000	4 300 000	610	285	783	**294/560-E1-XL-MB**
600	800	122	3 650 000	19 400 000	1 850 000	730	415	167	**292/600-E1-MB**
	900	180	8 700 000	34 000 000	3 250 000	660	325	392	**293/600-E1-XL-MB**
	1 030	258	15 200 000	56 000 000	4 700 000	580	265	889	**294/600-E1-XL-MB**
630	850	132	4 650 000	23 600 000	2 190 000	690	390	208	**292/630-E1-MB**
	950	190	9 700 000	37 500 000	3 550 000	620	305	462	**293/630-E1-XL-MB**
	1 090	280	17 300 000	62 000 000	5 200 000	540	250	1 073	**294/630-E1-XL-MB**
670	900	140	4 750 000	24 900 000	2 300 000	640	370	247	**292/670-E1-MB**
	1 000	200	10 600 000	41 000 000	3 850 000	580	285	526	**293/670-E1-XL-MB**
	1 150	290	18 400 000	66 000 000	5 500 000	510	241	1 214	**294/670-E1-XL-MB**

medias *https://www.schaeffler.de/std/1F9A*



Dimensions									Mounting dimensions				
d	D_1	d_1	r min.	T_1	T_2	T_3	T_4	A	d_a min.	D_a max.	D_b min.	d_b max.	r_a max.
400	460	510	4	42	31	53,5	81	212	465	500	550	414	3
	494	575	6	64	48	83	127	225	510	557	634	429	5
	525	650	7,5	89,5	69	120	178	234	555	622	722	434	6
420	489	545	5	46	34	58,5	91	225	495	534	590	439	4
	520	600	6	67,5	50	85	135	235	530	585	664	449	5
	545	670	7,5	90,5	70	124	178	244	580	643	742	457	6
440	508	570	5	49	34	61	91	235	520	554	610	458	4
	540	631,5	6	70,5	52	87	140	245	555	614	695	473	5
	577	715	9,5	101	77	134	199	257	610	684	794	477	8
460	530	585	5	46	34	59	91	245	535	575	632	479	4
	567	660	6	72,5	54	94,5	144	257	585	638	726	491	5
	596	735	9,5	101,5	77	135	199	268	630	704	815	497	8
480	556	620	5	55	37	62	99	259	565	603	662	507	4
	591	680	6	73,5	54	94	144	270	605	660	746	511	5
	625	780	9,5	108	88	147	216	280	660	744	865	516	8
500	574	640	5	55	37	65	99	268	585	622	682	524	4
	611	700	6	74	54	92	144	280	625	683	768	534	5
	648	800	9,5	110	86,6	147	216	290	685	765	886	539	8
530	608	675	5	57	39	64	105	285	620	661	722	561	4
	648	745	7,5	76	58	101,5	154	295	660	724	818	564	6
	686	845	9,5	116	89	156	228	308	725	810	937	570	8
560	644	715	5	60	41	71	111	302	655	697	762	587	4
	727	900	12	122	99	168	241	328	770	860	997	602	10
600	688	760	5	65	44	71,5	117	321	700	744	814	634	4
	720	840	7,5	89	65	113,5	174	335	745	815	920	634	6
	769	950	12	128	99	172	249	349	820	900	1 055	649	10
630	723	805	6	67	48	80	127	338	735	789	864	658	5
	761	885,5	9,5	92	68	122	183	345	785	856	970	666	8
	815	1 000	12	137	107	183	270	365	860	960	1 115	678	10
670	773	855	6	74	50	81	135	361	785	836	915	707	5
	809	930	9,5	96	72	126	193	372	825	906	1 020	703	8
	864	1 060	15	141	110	191	280	387	910	1 015	1 175	723	12

Axial spherical roller bearings

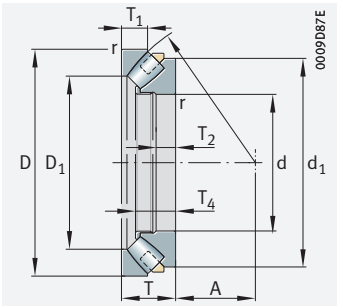

With solid brass cage

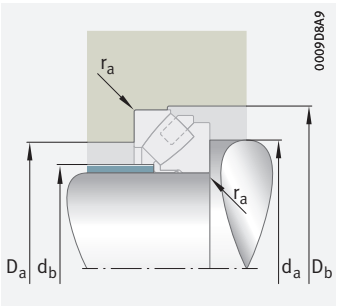

Mounting dimensions

d = 710 – 1 600 mm

Main dimensions			Basic load ratings		Fatigue limit load	Limiting speed	Speed rating	Mass	Designation
d	D	T	dyn. C_a	stat. C_{0a}	C_{ua}	n_G	$n_{\vartheta r}$	m	➤*1090* | *1.12* ➤*1091* | *1.13* X-life ➤*1085*
			N	N	N	min^{-1}	min^{-1}	≈ kg	
710	950	145	5 500 000	29 500 000	2 600 000	610	335	281	**292/710-E1-MB**
	1 060	212	11 800 000	46 000 000	4 250 000	550	265	635	**293/710-E1-XL-MB**
	1 220	308	21 000 000	76 000 000	6 200 000	475	220	1 469	**294/710-E1-XL-MB**
750	1 000	150	5 700 000	31 500 000	2 800 000	570	320	326	**292/750-E1-MB**
	1 120	224	12 700 000	50 000 000	4 550 000	510	250	735	**293/750-E1-XL-MB**
	1 280	315	19 000 000	84 000 000	6 700 000	455	206	1 654	**294/750-E1-MB**
800	1 060	155	6 400 000	35 500 000	3 100 000	540	300	365	**292/800-E1-MB**
	1 180	230	13 500 000	54 000 000	4 900 000	485	237	824	**293/800-E1-XL-MB**
	1 360	335	20 600 000	93 000 000	7 500 000	425	191	1 964	**294/800-E1-MB**
850	1 120	160	7 100 000	40 500 000	3 450 000	510	275	422	**292/850-E1-MB**
	1 250	243	12 900 000	62 000 000	5 500 000	455	218	972	**293/850-E1-MB**
	1 440	354	24 000 000	110 000 000	8 600 000	400	174	2 348	**294/850-E1-MB**
900	1 180	170	7 700 000	42 000 000	3 700 000	475	265	478	**292/900-E1-MB**
	1 520	372	25 500 000	120 000 000	9 100 000	375	166	2 744	**294/900-E1-MB**
950	1 250	180	8 800 000	48 500 000	4 150 000	445	248	577	**292/950-E1-MB**
	1 600	390	28 500 000	132 000 000	10 100 000	355	155	3 170	**294/950-E1-MB**
1 000	1 320	190	9 600 000	55 000 000	4 600 000	420	233	689	**292/1000-E1-MB**
	1 670	402	30 500 000	146 000 000	10 800 000	340	145	3 575	**294/1000-E1-MB**
1 060	1 400	206	10 700 000	62 000 000	5 100 000	395	219	852	**292/1060-E1-MB**
	1 770	426	33 000 000	155 000 000	11 900 000	315	139	4 201	**294/1060-E1-MB**
1 120	1 460	206	10 700 000	64 000 000	5 300 000	375	207	896	**292/1120-E1-MB**
1 180	1 520	206	10 700 000	67 000 000	5 500 000	360	196	945	**292/1180-E1-MB**
1 250	1 800	330	23 700 000	125 000 000	10 000 000	305	142	2 654	**293/1250-E1-MB**
1 600	2 280	408	36 000 000	192 000 000	14 600 000	233	107	5 137	**293/1600-E1-MB**

medias *https://www.schaeffler.de/std/1F9A*



Dimensions									Mounting dimensions				
d	D_1	d_1	r min.	T_1	T_2	T_3	T_4	A	d_a min.	D_a max.	D_b min.	d_b max.	r_a max.
710	815	900	6	75	52	88	140	380	825	882	966	741	5
	855	985	9,5	103	76	132,5	205	394	875	962	1 082	746	8
	917	1 120	15	149	117	202	298	415	960	1 073	1 250	762	12
750	858	950	6	81	54	89	144	409	875	930	1 017	789	5
	910	1 040	9,5	109	81	140	216	415	925	1 015	1 142	790	8
	964	1 180	15	153	121	210	305	436	1 015	1 130	1 310	811	12
800	911	1 010	7,5	81	56	94	149	434	925	987	1 078	837	6
	965	1 100	9,5	111	83	145,5	222	440	980	1 070	1 202	840	8
	1 034	1 255	15	165	123	219	324	462	1 085	1 200	1 390	870	12
850	967	1 070	7,5	82	58	101,5	154	455	985	1 043	1 138	886	6
	1 021	1 165	12	118	87	152	235	468	1 045	1 137	1 273	896	10
	1 077	1 325	15	172	142,9	239	342	490	1 145	1 275	1 470	915	12
900	1 023	1 120	7,5	84	61	102,5	167	477	1 025	1 089	1 198	933	6
	1 137	1 405	15	186	147	251	360	518	1 215	1 345	1 555	969	12
950	1 081	1 190	7,5	90	65	110	174	507	1 090	1 147	1 268	985	6
	1 209	1 475	15	191	153	260	377	546	1 275	1 372	1 635	1 020	12
1 000	1 139	1 255	9,5	98	68	117,5	182	540	1 155	1 216	1 340	1 042	8
	1 250	1 540	15	200	160	277	390	581	1 340	1 435	1 705	1 071	12
1 060	1 211	1 336,3	9,5	108	74	124	199	566	1 225	1 290	1 422	1 106	8
	1 349	1 630	15	207	192	280	412	610	1 410	1 521	1 815	1 141	12
1 120	1 272	1 395	9,5	108	74	125	199	601	1 285	1 350	1 482	1 168	8
1 180	1 331	1 455	9,5	108	74	125	199	625	1 345	1 415	1 542	1 227	8
1 250	1 465	1 690,5	15	161	119	208	319	690	1 515	1 640	1 823	1 315	12
1 600	1 885	2 135,5	19	195	147	255	395	894	1 915	2 090	2 303	1 675	15

Crossed roller bearings



Matrix for bearing preselection ____ *1109*

1 Crossed roller bearings ____ 1110

1.1 Bearing design ____ *1110*
1.2 Load carrying capacity ____ *1111*
1.3 Angular adjustment facility ____ *1112*
1.4 Lubrication ____ *1112*
1.5 Sealing ____ *1113*
1.6 Speeds ____ *1114*

1.7 Noise *1114*
1.8 Temperature range *1114*
1.9 Cages *1115*
1.10 Internal clearance *1115*
1.11 Dimensions, tolerances *1115*
1.12 Suffixes *1115*
1.13 Structure of bearing designation *1115*
1.14 Dimensioning *1116*
1.15 Minimum load *1126*
1.16 Design of bearing arrangements *1126*
1.17 Mounting and dismounting *1131*
1.18 Legal notice regarding data freshness *1134*
1.19 Further information *1134*
Product tables *1136*
Crossed roller bearings *1136*

Matrix for bearing preselection

The matrix gives an overview of the types and design features.

It can be used to make a preliminary assessment of whether a bearing is fundamentally suitable for the envisaged application.

The additional information provided in the product chapter (see column "detailed information") and in the Technical principles must, however, be observed in addition to this overview in selection of the bearing.

+++ extremely suitable
++ highly suitable
+ suitable
(+) suitable with restrictions
– not suitable/not applicable
✓ available

Design features and suitability			Crossed roller bearings	detailed information ➤ 1110
Load carrying capacity	radial		++	➤ 1111|1.2
	axial, one direction		+++	➤ 1111|1.2
	axial, both directions		+++	➤ 1111|1.2
	moments		++	➤ 1111|1.2
Compensation of angular misalignments	static		–	➤ 1112|1.3
	dynamic		–	➤ 1112|1.3
Bearing design	cylindrical bore		–	➤ 1110|1.1
	tapered bore		–	
	separable		–	➤ 1131|1.17
Lubrication	greased		✓	➤ 1112|1.4
Sealing	open		✓	➤ 1113|1.5
	non-contact		–	➤ 1113|1.5
	contact		–	➤ 1113|1.5
Operating temperature in °C	from to		–30 +100	➤ 1114|1.8
Suitability for	high speeds		(+)	➤ 1114|1.6
	high running accuracy		++	➤ 1118 ➤ 1115|1.11
	low-noise running		+	➤ 1114|1.7
	high rigidity		+	➤ 1118
	reduced friction		+	➤ 56
	length compensation within bearing		–	
	non-locating bearing arrangement		–	➤ 141
	locating bearing arrangement		+	➤ 141
X-life bearings		X-life	–	
Bearing bore d_i in mm	from to		70 500	➤ 1136
Product tables	from page ➤		1136	

1 Crossed roller bearings

Crossed roller bearings SX:

- are suitable, due to their high running accuracy, as bearings for high precision applications (such as those in robots, machine tools, handling systems, precision mechanical and medical devices, vehicle components)
- correspond in their main dimensions to the ISO dimension series 18 with very small section height
- can support axial forces in both directions, radial loads, tilting moments and any combination of loads ➤*1111*|*1.2*
- usually allow designs with two bearing positions to be replaced by one bearing position ➤*1110*|🗀 *1*
- are very rigid (they can be supplied with normal clearance, clearance-free or preloaded)
- are suitable for supported and suspended loads
- are always a good choice for a technically and economically leading bearing solution if compact and easy-to-fit rolling bearings with high tilting moment carrying capacity and rigidity, with uniform running free from stick-slip, low rotational resistance as well as high axial and radial runout accuracy are required in only one bearing position

For an overview of other product-specific features, see the Matrix for bearing preselection ➤*1109*.

🗀 ***1***
Comparison: bearing arrangement with two bearing positions/ bearing arrangement with a crossed roller bearing SX

① *Bearing arrangement with two bearing positions*
② *Bearing arrangement with one crossed roller bearing SX*

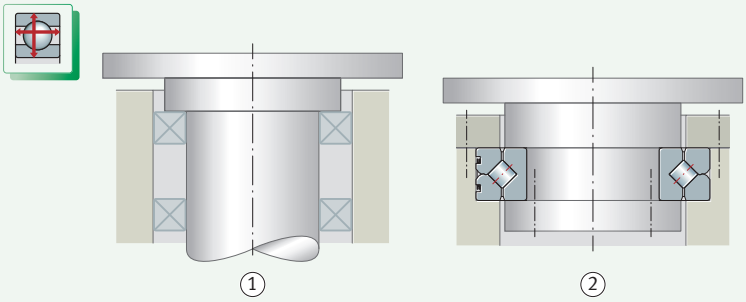

1.1 Bearing design

✎ *Crossed roller bearings SX are compact locating bearings with high axial rigidity*

Crossed roller bearings SX are bearings for high precision applications, whose main dimensions correspond to the ISO dimension series 18 with very small section height in accordance with DIN 616. They comprise outer rings, inner rings, rolling elements and plastic spacers.
The outer ring is split in the circumferential direction and is held together by three sheet metal retaining rings ➤*1111*|🗀 *2*. The cylindrical rollers correspond to DIN 5402 and are in an X arrangement with each other on the raceways. The bearings are very rigid, have high running accuracy and are supplied with normal clearance, low clearance or preload. Bearings with preload have the suffix VSP, while bearings with low clearance have the suffix RL0 ➤*1115*|▦ *3*. The bearing outer rings are easily fixed to the adjacent construction using clamping rings ➤*1127*.

✎ *Also available in a corrosion-resistant design*

For applications requiring high corrosion protection, the bearings are also available in a corrosion-resistant design with the special coating Corrotect ➤ *109*.

2
Crossed roller bearing SX

① *Split outer ring*
② *Sheet metal retaining ring*
③ *Lubrication hole (3 lubrication holes distributed over the circumference)*
④ *Plastic spacers*

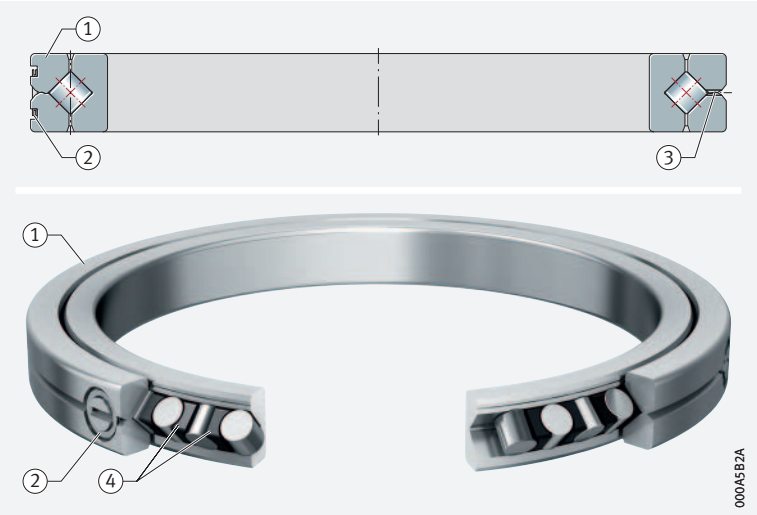

Permissible circumferential velocities

✎ *Influencing factors*

The possible circumferential velocity is dependent on the bearing (normal clearance or preloaded) and on the lubrication (grease or oil) ➤ *1111*|▦ *1*.

1
Permissible circumferential velocities

D_M = *rolling element pitch circle diameter* ➤ *1136*|▦

Normal clearance	Preload	Circumferential velocity
Oil lubrication	–	up to 8 m/s ($n \cdot D_M$ = 152 800)
Grease lubrication	–	up to 4 m/s ($n \cdot D_M$ = 76 400)
–	Oil lubrication	up to 4 m/s ($n \cdot D_M$ = 76 400)
–	Grease lubrication	up to 2 m/s ($n \cdot D_M$ = 38 200)

1.2 Load carrying capacity

✎ *Suitable for axial loads in both directions, radial loads and tilting moment loads*

Due to the X arrangement of the cylindrical rollers, the bearings can support axial forces in both directions, radial loads, tilting moment loads and any combination of loads by means of a single bearing position ➤ *1112*|⧉ *4*. As a result, it is generally possible to reduce conventional bearing arrangements comprising two bearing positions (bearing arrangement with one radial and one axial bearing) to one bearing position ➤ *1112*|⧉ *3* and ➤ *1112*|⧉ *4*. This reduces the work required and the costs for the design of the adjacent construction (only one bearing position is processed) and considerably reduces the mounting of the bearings (there is no requirement for the matching of two bearings to each other).

3
Conventional bearing arrangement with two bearing positions

F_r = *radial load*
F_a = *axial load*
M = *tilting moment load*

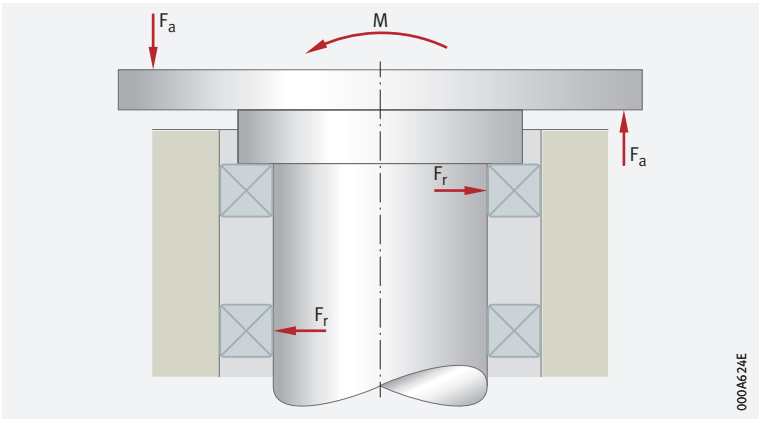

4
Optimised bearing arrangement with one crossed roller bearing

F_r = *radial load*
F_a = *axial load*
M = *tilting moment load*
① *Crossed roller bearing SX*

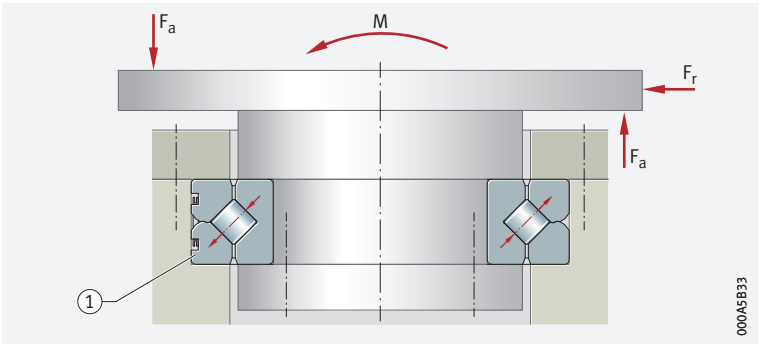

1.3 Angular adjustment facility

Crossed roller bearings SX cannot be used for the compensation of misalignments. These bearings are precision bearings for high precision applications. In order to ensure their correct function, it is essential that the specifications for design of the adjacent construction are observed ➤*1126|1.16*. Skewing of the bearing rings increases the running noise, places increased strain on the plastic spacers, has a negative effect on the running accuracy and a highly detrimental influence on the operating life of the bearings.

1.4 Lubrication

✎ *Grease or oil lubrication is possible*

The bearings are greased as standard but can alternatively be lubricated with oil. The decisive factors in determining the type of lubrication and the requisite lubricant quantity are:

- the size of the bearing
- the design of the bearing environment
- the lubricant feeds
- the operating conditions

If there is any uncertainty as to whether the lubricant or type of lubrication is suitable for a particular application, please consult Schaeffler or the lubricant manufacturer respectively.

Grease lubrication

✎ *Suitable greases*

If the bearing is to be lubricated with grease, a high quality lithium soap grease to DIN 51825–KP2N–20 is suitable, for example Arcanol LOAD150 or LOAD220.

Lubrication intervals

Influences on the lubrication interval

The lubrication intervals are essentially dependent on:

- the operating conditions
- the environmental influences such as contamination, water, etc.
- the type of bearings

Precise lubrication intervals can only be determined by means of tests under the specific application conditions. The observation period selected must be sufficiently long and the condition of the grease must be checked at regular intervals.

Grease operating life

If relubrication is not possible, the grease operating life becomes the decisive factor. Based on experience, the guide value for the grease operating life in the majority of applications is higher by a factor of 2 than the guide value for the lubrication interval. At operating temperatures above +70 °C, the lubrication interval and therefore the grease operating life are reduced. In order to ensure operational reliability, the grease operating life should not exceed 3 years.

Oil lubrication

Selection of the oil

A lubricant film which is capable of supporting loads must form in the contact zones between the rolling elements and the raceway. Depending on the operating speed, the oil at operating temperature must have at least the nominal viscosity ν_1. The guide value for ν_1 is dependent on the mean bearing diameter d_M and the speed.

Influence of temperature on viscosity

As the temperature increases, the viscosity of the oil decreases. When selecting the viscosity, the lower operating temperature must also be taken into consideration. With increasing viscosity, the flowability of the lubricant is reduced. As a result, the level of power losses will increase.

Suitable oils

For oil lubrication, suitable oils are type CLP to DIN 1517 or HLP to DIN 51524 of the viscosity classes ISO VG 10 to 100.

With oil lubrication, oil change intervals must be observed

At higher temperatures, aged oil and additives in the oil can impair the operating life of the plastic used for the spacers. Stipulated oil change intervals must therefore be observed.

1.5 Sealing

Provide seals in the adjacent construction

Crossed roller bearings SX are not sealed. As a result, sealing of the bearing position must be carried out in the adjacent construction. This must reliably prevent:

- moisture and contaminants from entering the bearing
- the egress of lubricant from the bearing

Schaeffler seal profiles

Material by the metre for radial and/or axial sealing of the bearing position

For sealing of the bearing position in the adjacent construction, Schaeffler supplies various seal profiles by the metre ➤*1114*|*5*. These profiles are intended for axial and/or radial sealing and – depending on the seal profile – fulfil a wide range of requirements (for example: under normal requirements for sealing, under heavy contamination, for low frictional torque, if only limited space is available, for sealing of fluids, at low speeds or under swivel operation). In addition to the seal profiles with a radial or axial sealing effect respectively, double direction profiles (with both axial and radial sealing effect) are also available. Mounting drawings can be requested for the individual seal profiles.

The seal profiles are not suitable for applications that require leakage-free operation; this applies not only to oil but also to grease lubrication. If leakage losses are unacceptable, measures such as rotary shaft seals can be used. The area around the bearing seal must be designed such that the seal profiles are not damaged during operation.

5
Seal profiles – example

① *Axial sealing*
② *Radial sealing*

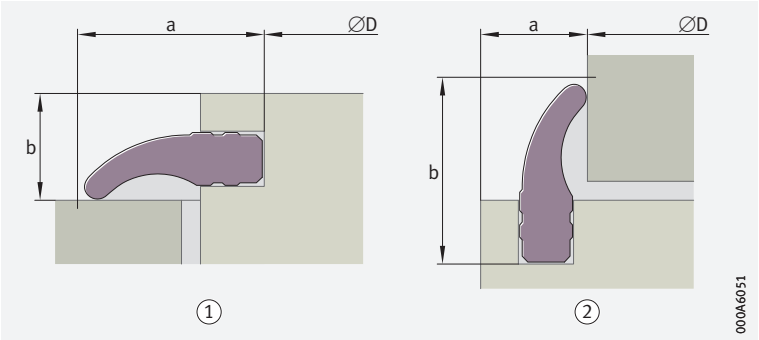

Seal profile material

The standard material for the profiles is the synthetic elastomer NBR 70. This material has good resistance to oil and grease as well as good wear resistance. Operating temperature of seal profiles ➤*1114*|▦*2*.
For further information on the seal profiles, please contact Schaeffler.

1.6 Speeds

✎*Limiting speeds in the product tables*

Rolling bearings cannot rotate at unspecified high speeds, but are generally restricted by the operating temperature that is permissible in relation to the lubricant and the material of the bearing parts ➤*1114*|*1.8*.
The product tables give the kinematic limiting speeds n_G oil and n_G grease for the bearings.

The limiting speeds n_G oil and n_G grease are the kinematically permissible speeds for a bearing and apply to oil and grease lubrication respectively. Even under favourable mounting and operating conditions, these speeds must not be exceeded without prior consultation with Schaeffler.

1.7 Noise

Schaeffler Noise Index

The Schaeffler Noise Index (SGI) is not yet available for this bearing type ➤*69*. The data for these bearing series will be introduced and updated in stages.

Further information:

- ***medias*** *https://medias.schaeffler.com*

1.8 Temperature range

✎*Limiting values*

The operating temperature of the bearings is limited by:

- the dimensional stability of the bearing rings and cylindrical rollers
- the material of the plastic spacers
- the lubricant
- the seal material in the adjacent construction

Possible operating temperatures of the bearings ➤*1114*|▦*2*.

▦*2*
Permissible temperature ranges

Operating temperature	Crossed roller bearings	Schaeffler seal profiles
	–30 °C to +100 °C	–40 °C to +80 °C

In the event of anticipated temperatures which lie outside the stated values, please contact Schaeffler.

1.9 Cages

The rollers are guided by plastic spacers

In the crossed roller bearings SX, the rolling elements are separated from each other and guided not by typical rolling bearing cages but by plastic spacers ➤1111|2. The plastic selected and the design of the running surfaces for the cylindrical rollers give low-friction running of the bearings.

1.10 Internal clearance

The crossed roller bearings are available:

- with normal clearance (radial and axial clearance)
- with low clearance (radial clearance/preload)
- with preload VSP (preload min. and max.)

1.11 Dimensions, tolerances

Dimension standards

The main dimensions of crossed roller bearings correspond to dimension series 18 in accordance with DIN 616.

Tolerances

The dimensional and running tolerances are based on DIN 620-2 and DIN 620-3 and are in the range P6 and P5.

1.12 Suffixes

Suffixes describe the design and features of a bearing in more detail.

3 Suffixes and corresponding descriptions

Suffix	Description of suffix	
RR	Corrosion-resistant design, with Corrotect coating	Special design, available by agreement
RL0	Low clearance	Standard
VSP	Preloaded	Special design, available by agreement
VSP+PRL50	Preloaded, axial and radial runout tolerance restricted by 50%	Special design, available by agreement

1.13 Structure of bearing designation

With ***medias*** interchange, equivalent Schaeffler bearing designations can be determined for bearing designations from other rolling bearing manufacturers *https://www.schaeffler.de/std/1B69*.

Example The designation of bearings follows a set model ➤1115|6.

6 Crossed roller bearing SX, low clearance: designation structure

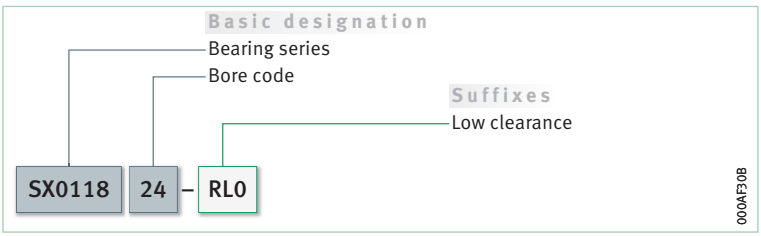

1.14 Dimensioning

Static load carrying capacity

For bearings under static loading, the static load carrying capacity applies

Crossed roller bearings that undergo rotary motion only infrequently, undergo slow swivel motion, rotate only slowly or are subjected to load while stationary are dimensioned on the basis of their static load carrying capacity. The size of a statically loaded bearing can therefore be checked in approximate terms using the basic static load ratings C_0 and the static limiting load diagrams.

Checking the static load carrying capacity

It can be checked in approximate terms if the correct load arrangement is present and all the requirements relating to clamping rings, location, mounting and lubrication are fulfilled ➤1116|7.

Where load arrangements are more complex or there are variations from the conditions, please contact us.

7 *Load arrangement*

F_{0a} = axial static bearing load
F_{0r} = radial static bearing load
M_{0k} = static tilting moment load

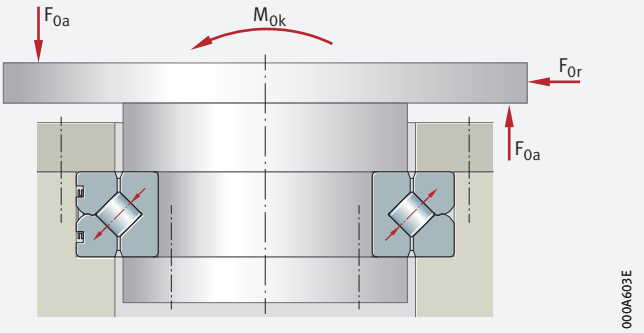

In order to check the static load carrying capacity, the following equivalent static operating values must be determined:

- the equivalent static bearing load F_{0q}
- the equivalent static tilting moment load M_{0q}

Checking is possible for applications with or without radial load.

Determining the equivalent static bearing load without radial load

In the presence of axial and tilting moment loads only ➤1116|1 and ➤1116|2:

1 *Equivalent axial bearing load (static)*

$$F_{0q} \triangleq F_{0a} \cdot f_A \cdot f_S$$

2 *Equivalent tilting moment load (static)*

$$M_{0q} \triangleq M_{0k} \cdot f_A \cdot f_S$$

Legend

F_{0q}	kN	Equivalent axial bearing load (static)
F_{0a}	kN	Axial static bearing load
f_A	–	Application factor ➤1118|4
f_S	–	Factor for additional safety ➤1118
M_{0q}	kNm	Equivalent tilting moment load (static)
M_{0k}	kNm	Static tilting moment load.

The values for F_{0q} and M_{0q} are used to determine the load point in the static limiting load diagram for the raceway ➤1136|.

In addition to the raceway, the dimensioning of the fixing screws must also be checked.

The static limiting load diagrams for the raceway and the fixing screws are indicated in the product tables.

The load point must lie under the raceway curve, otherwise the bearing is not adequately dimensioned.

Determining the equivalent static bearing load with radial load

Radial loads can only be taken into consideration if the radial load F_{0r} is smaller than the basic static radial load rating C_{0r} ➤*1136*.

The equivalent static bearing load with radial load is determined as follows:

- Calculate the parameter for the load eccentricity ϵ according to ➤*1117* *f 3*
- Determine the static radial load factor f_{0r}. In this case:
  - determine the ratio F_{0r}/F_{0a} in ➤*1117* *8* or ➤*1118* *9* respectively
  - based on the ratio F_{0r}/F_{0a} and ϵ, determine the static radial load factor f_{0r} from ➤*1117* *8* or ➤*1118* *9* respectively
- Determine the application factor f_A ➤*1118* *4* and, where necessary, the safety factor f_S
- Calculate the equivalent axial bearing load F_{0q} and the equivalent tilting moment load M_{0q} using the equations ➤*1117* *f 4* and ➤*1117* *f 5*
- Using the values for F_{0q} and M_{0q}, determine the load point in the static limiting load diagram for the raceway ➤*1136*

The load point must lie under the raceway curve, otherwise the bearing is not adequately dimensioned.

f 3
Load eccentricity parameter

$$\epsilon = \frac{2\,000 \cdot M_{0k}}{F_{0a} \cdot D_M}$$

f 4
Equivalent bearing load (static)

$$F_{0q} = F_{0a} \cdot f_A \cdot f_S \cdot f_{0r}$$

f 5
Equivalent tilting moment load (static)

$$M_{0q} = M_{0k} \cdot f_A \cdot f_S \cdot f_{0r}$$

Legend

ϵ	–	Load eccentricity parameter
M_{0k}	kNm	Static tilting moment load
F_{0a}	kN	Axial static bearing load
D_M	mm	Rolling element pitch circle diameter ➤*1136*
F_{0q}	kN	Equivalent bearing load (static)
f_A	–	Application factor ➤*1118* *4*
f_S	–	Factor for additional safety ➤*1118*
f_{0r}	–	Static radial load factor ➤*1117* *8* or ➤*1118* *9*
M_{0q}	kNm	Equivalent tilting moment load (static).

8
Static radial load factor

f_{0r} = *static radial load factor*
ϵ = *load eccentricity parameter; $\epsilon \leqq 2$*
F_{0a} = *axial static bearing load*
F_{0r} = *radial static bearing load*

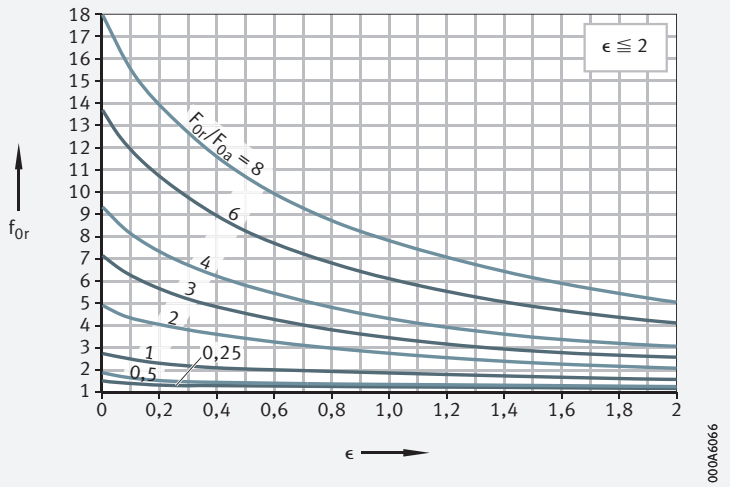

9
Static radial load factor

f_{0r} = *static radial load factor*
ϵ = *load eccentricity parameter; $\epsilon > 2$*
F_{0a} = *axial static bearing load*
F_{0r} = *radial static bearing load*

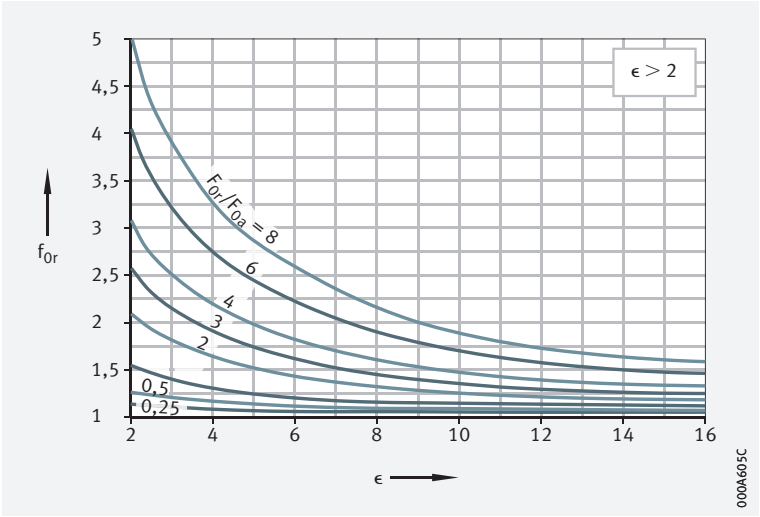

Application factors

The application factors f_A are empirical values obtained in practice ➤*1118*| ▦ *4*. They take account of the most important requirements, such as the type and severity of operation, rigidity and running accuracy. If the precise requirements of an application are known, the values may be altered accordingly.

Application factors < 1 must not be used.

A large proportion of applications can be statically calculated using the factor 1, for example in the case of bearings for gearboxes and rotary tables.

In addition to static calculation, the rating life should also always be checked ➤*1120*.

▦ **4**
Application factors f_A

Application	Operating and requirement criteria	Application factor f_A
Robots	Rigidity	1,25
Antennae	Accuracy	1,5
Machine tools	Accuracy	1,5
Metrology	Smooth running	2
Medical equipment	Smooth running	1,5

Safety factors

The factor for additional safety f_S is 1.

It is not normally necessary to factor in any additional safety in calculation.

In special cases, such as approval specifications, internal specifications, requirements stipulated by inspection bodies etc., the appropriate safety factors must be applied.

Calculation example

The static load carrying capacity of the crossed roller bearing SX011860 is to be checked.

✎ *Given*	Static bearing load (axial)	F_{0a} = 70 kN
	Static bearing load (radial)	F_{0r} = 17,5 kN
	Static tilting moment load	M_{0k} = 22,5 kNm
	Rolling element pitch circle diameter	D_M = 340 mm
	Application factor	f_A = 1,25
	Safety factor	f_S = 1
✎ *Required*	Static load carrying capacity of the bearing	

Solution

*f*6 *Load eccentricity parameter*

$$\epsilon = \frac{2\,000 \cdot M_{0k}}{F_{0a} \cdot D_M}$$

$$\epsilon = \frac{2000 \cdot 22{,}5}{70 \cdot 340} = 1{,}89$$

$$\frac{F_{0r}}{F_{0a}} = \frac{17{,}5}{70} = 0{,}25$$

$$f_{0r} = 1{,}2$$

Legend

ϵ	–	Load eccentricity parameter
M_{0k}	kNm	Static tilting moment load
F_{0a}	kN	Static bearing load (axial)
D_M	mm	Rolling element pitch circle diameter
F_{0r}	kN	Static bearing load (radial)
f_{0r}	–	Static radial load factor ➤*1117*|🔗*8* or ➤*1118*|🔗*9*.

*f*7 *Equivalent bearing load (static)*

$$F_{0q} = F_{0a} \cdot f_A \cdot f_S \cdot f_{0r}$$

$$F_{0q} = 70 \cdot 1{,}25 \cdot 1 \cdot 1{,}2 = 105\ \text{kN}$$

Legend

F_{0q}	kN	Equivalent bearing load (static)
F_{0a}	kN	Static bearing load (axial)
f_A	–	Application factor
f_S	–	Factor for additional safety.

*f*8 *Equivalent tilting moment load (static)*

$$M_{0q} = M_{0k} \cdot f_A \cdot f_S \cdot f_{0r}$$

$$M_{0q} = 22{,}5 \cdot 1{,}25 \cdot 1 \cdot 1{,}2 = 33{,}75\ \text{kNm}$$

Legend

M_{0q}	kNm	Equivalent tilting moment load (static)
M_{0k}	kNm	Static tilting moment load
f_A	–	Application factor
f_S	–	Factor for additional safety.

Determining the load point in the static limiting load diagram – checking the static load carrying capacity

Using the values for F_{0q} and M_{0q}, the load point in the static limiting load diagrams for the raceway and fixing screws is determined ➤*1120*\|🔗*10* and ➤*1120*\|🔗*11*.

The load point is below the raceway and screw curves. The bearing is adequately dimensioned and thus suitable for the application.

10
Static limiting load diagram for raceway – compressive load

M_{0q} = *equivalent tilting moment load*

F_{0q} = *equivalent bearing load*

① *Raceway curve*

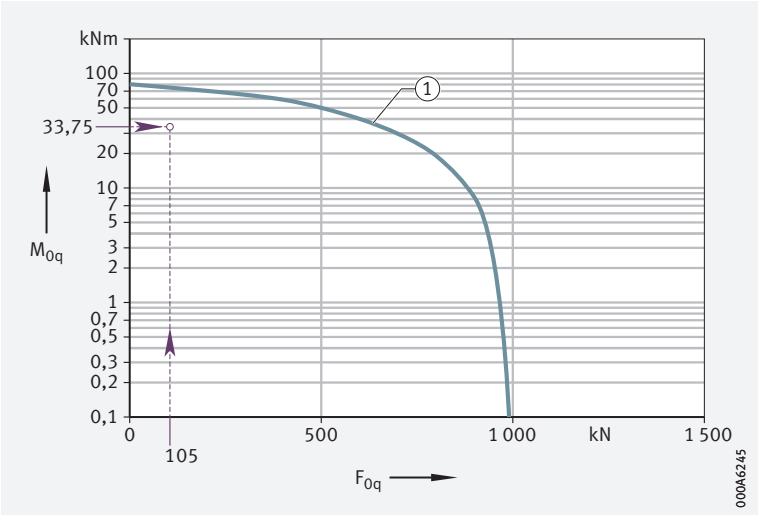

11
Static limiting load diagram for fixing screws – compressive load

M_{0q} = *equivalent tilting moment load*

F_{0q} = *equivalent bearing load*

① *Screw curve*

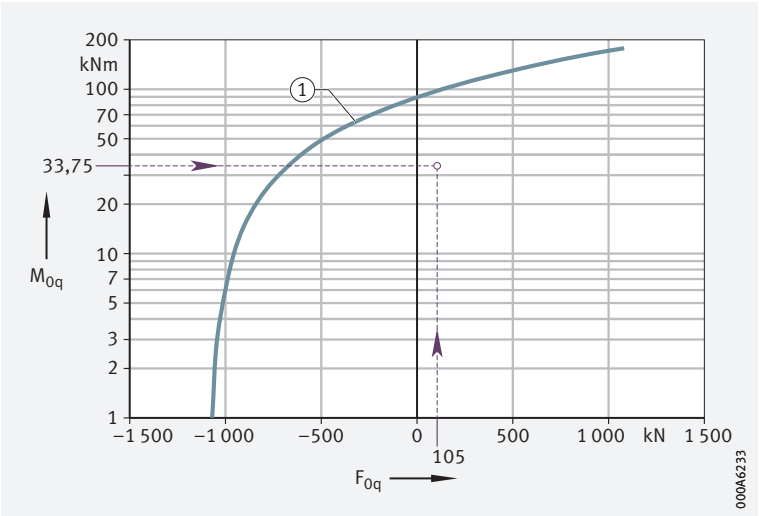

Dynamic load carrying capacity

✎ For bearings under dynamic loading, the dynamic load carrying capacity applies

Dynamically loaded crossed roller bearings, i.e. bearings that undergo predominantly rotary motion, are dimensioned in accordance with their dynamic load carrying capacity. The size of a dynamically loaded bearing can therefore be checked in approximate terms using the basic dynamic load ratings C and the basic rating life L or L_h.

Determining the basic rating life

The life formulae for L and L_h are only valid:

- with a load arrangement according to ➤ *1121* | *12*
- if all the requirements are fulfilled in relation to location (the bearing rings must be rigid or firmly connected to the adjacent construction), mounting, lubrication and sealing
- if the load and speed can be regarded as constant during operation. If the load and speed are not constant, equivalent operating values can be determined that will result in the same fatigue conditions as the actual loads
- if the load ratio is $F_r/F_a \leqq 8$

For more complex load arrangements, if a ratio $F_r/F_a > 8$ is present or there are variations from the specified conditions, please contact us.

12
Load arrangement

F_a = *axial dynamic bearing load*
F_r = *radial dynamic bearing load*
M_k = *dynamic tilting moment load*

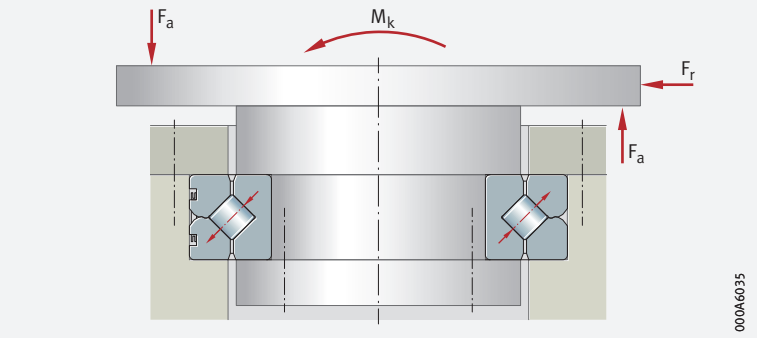

Determining the basic rating life for bearings subjected to combined loads

For bearings subjected to combined loads, in other words bearings with axial, radial and tilting moment loads, the rating life L or L_h is determined as follows:

- Determine the ratio of the radial dynamic bearing load F_r to the axial dynamic bearing load F_a (F_r/F_a)
- Calculate the load eccentricity parameter ϵ ➤*1121*| *9*
- Using the values for ϵ and the ratio F_r/F_a, determine the dynamic load factor k_F ➤*1122*| *13*
- Calculate the equivalent dynamic axial bearing load $P_a = k_F \cdot F_a$ ➤*1121*| *10*
- Enter the equivalent dynamic axial bearing load P_a and the basic dynamic axial load rating C_a in the rating life equations L or L_h respectively and calculate the rating life ➤*1121*| *11* and ➤*1121*| *12*

  If swivel operation is present, enter the operating speed n determined in the rating life equation L_h ➤*1121*| *13*

9
Load eccentricity parameter

$$\epsilon = \frac{2\,000 \cdot M_k}{F_a \cdot D_M}$$

10
Equivalent dynamic axial bearing load

$$P_a = k_F \cdot F_a$$

11
Basic rating life in millions of revolutions

$$L_{10} = \left(\frac{C_a}{P_a}\right)^p$$

12
Basic rating life in operating hours

$$L_{10h} = \frac{16666}{n} \cdot \left(\frac{C_a}{P_a}\right)^p$$

13
Operating speed

$$n = n_{osc} \cdot \frac{\gamma}{90°}$$

13
Dynamic load factor

k_F = *dynamic load factor*
ϵ = *load eccentricity parameter*
F_a = *axial dynamic bearing load*
F_r = *radial dynamic bearing load*

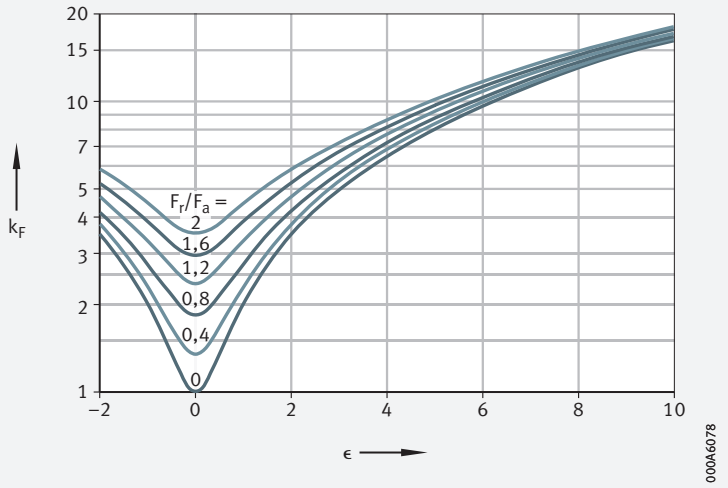

Determining the basic rating life for bearings subjected to radial loads only

For slewing rings subjected to radial loads only, the following values are entered in the rating life formulae L and L_h:

- $P_r = F_r$
- the basic dynamic radial load rating C_r

f 14
Basic rating life in millions of revolutions

$$L_{10} = \left(\frac{C_r}{P_r}\right)^p$$

f 15
Basic rating life in operating hours

$$L_{10h} = \frac{16666}{n} \cdot \left(\frac{C_r}{P_r}\right)^p$$

Legend

ϵ	–	Load eccentricity parameter
M_k	kNm	Dynamic tilting moment load
F_a	kN	Axial dynamic bearing load
D_M	mm	Rolling element pitch circle diameter ➤ *1136* | ▦
P_a	kN	Equivalent dynamic axial bearing load. For bearings subjected to radial load only, enter P_r
k_F	–	Dynamic load factor ➤ *1122* | 🔗 *13*
L_{10}	10^6	Basic rating life in millions of revolutions
C_a, C_r	kN	Basic axial or radial dynamic load rating ➤ *1136* | ▦. For bearings subjected to radial load only, enter C_r
p	–	Life exponent for crossed roller bearings: p = $^{10}/_3$
L_{10h}	h	Basic rating life in operating hours
n	min^{-1}	Operating speed
n_{osc}	min^{-1}	Frequency of oscillating motion
γ	°	Half of swivel angle
P_r	kN	Equivalent dynamic radial bearing load
F_r	kN	Radial dynamic bearing load.

Calculation example

For the crossed roller bearing SX011820, the basic rating life L in millions of revolutions is to be checked.

Given	Crossed roller bearing	SX011820
	Rolling element pitch circle diameter ➤*1136*	D_M = 112 mm
	Basic dynamic load rating (axial) ➤*1136*	C_a = 28 kN
	Life exponent for crossed roller bearings	p = $^{10}/_{3}$
	Dynamic bearing load (axial)	F_a = 20 kN
	Dynamic bearing load (radial)	F_r = 4 kN
	Dynamic tilting moment load	M_k = 1 kNm
Required	Basic rating life L_{10} in millions of revolutions	

Solution

f **16** *Load eccentricity parameter*

$$\epsilon = \frac{2\,000 \cdot M_k}{F_a \cdot D_M}$$

$$\epsilon = \frac{2\,000 \cdot 1}{20 \cdot 112} = 0{,}89$$

$$\frac{F_r}{F_a} = \frac{4}{20} = 0{,}2$$

$$k_F = 2{,}1$$

Legend

ϵ	–	Load eccentricity parameter
M_k	kNm	Dynamic tilting moment load
F_a	kN	Axial dynamic bearing load
D_M	mm	Rolling element pitch circle diameter ➤*1136*
F_r	kN	Radial dynamic bearing load
k_F	–	Dynamic load factor ➤*1122* 🗨*13*.

f **17** *Equivalent bearing load (static)*

$$P_a = k_F \cdot F_a$$

$$P_a = 2{,}1 \cdot 20\ \text{kN} = 42\ \text{kN}$$

Legend

P_a	kN	Equivalent dynamic axial bearing load. For bearings subjected to radial load only, enter P_r
k_F	–	Dynamic load factor ➤*1122* 🗨*13*
F_a	kN	Axial dynamic bearing load.

f **18** *Basic rating life in million revolutions*

$$L_{10} = \left(\frac{C_a}{P_a}\right)^p$$

$$L_{10} = \left(\frac{28}{42}\right)^{\frac{10}{3}} = 0{,}26 \cdot 10^6 \text{ revolutions}$$

Legend

L_{10}	10^6	Basic rating life in millions of revolutions For bearings subjected to radial load only, enter P_r
C_a, C_r	kN	Basic axial or radial dynamic load rating ➤*1136*
P_a	kN	Equivalent dynamic axial bearing load. For bearings subjected to radial load only, enter P_r
p	–	Life exponent for crossed roller bearings: p = $^{10}/_{3}$.

14
Dynamic load factor k_F for crossed roller bearings

k_F = *dynamic load factor*
ϵ = *load eccentricity parameter*
F_a = *axial dynamic bearing load*
F_r = *radial dynamic bearing load*

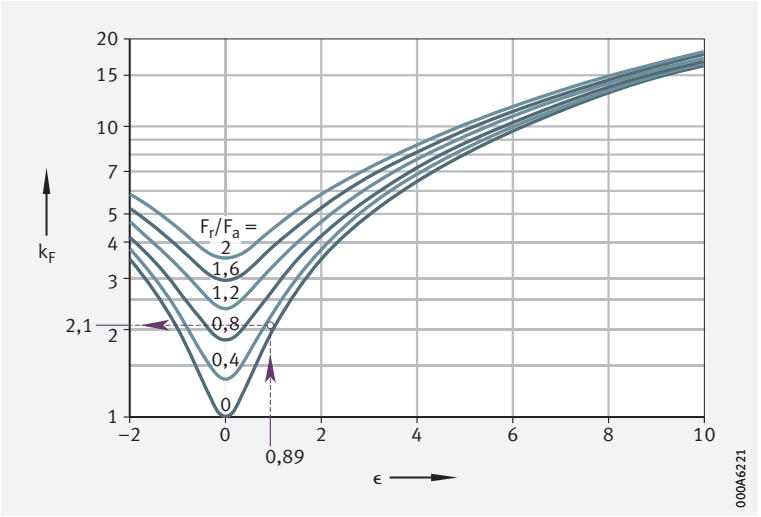

Determining the load carrying capacity of the fixing screws

In addition to the raceway, the load carrying capacity of the fixing screws must also be checked. This is based on the information in ➤*1116*.

The load carrying capacity of the fixing screws can be checked if the following conditions are fulfilled:

- the criteria according to ➤*1116*
  - the screws are tightened as specified using a torque wrench
    screw tightening factor $\alpha_A = 1,6$
    tightening torques ➤*1129*|▦*8* to ➤*1130*|▦*9*
- the permissible contact pressure is not exceeded
- screws of the recommended size, quantity and grade are used

Indicator of load carrying capacity

The load carrying capacity of the screws is described by:

- the curves in the static limiting load diagrams for fixing screws in the product tables
- the maximum permissible radial load $F_{r\,per}$ (friction locking)

The screw curves are shown in the static limiting load diagrams for fixing screws. The curves are based on screws of grade 10.9, tightened to 90% of their proof stress, including the torsion content.

If screws of grade 8.8 or 12.9 are used, the equivalent static loads F_{0q} and M_{0q}, ➤*1116*, must be converted using the following factors:

- grade 8.8 ($F_{0q} \cdot 1,65$, $M_{0q} \cdot 1,65$)
- grade 12.9 ($F_{0q} \cdot 0,8$, $M_{0q} \cdot 0,8$)

Static limiting load diagram for fixing screws – example

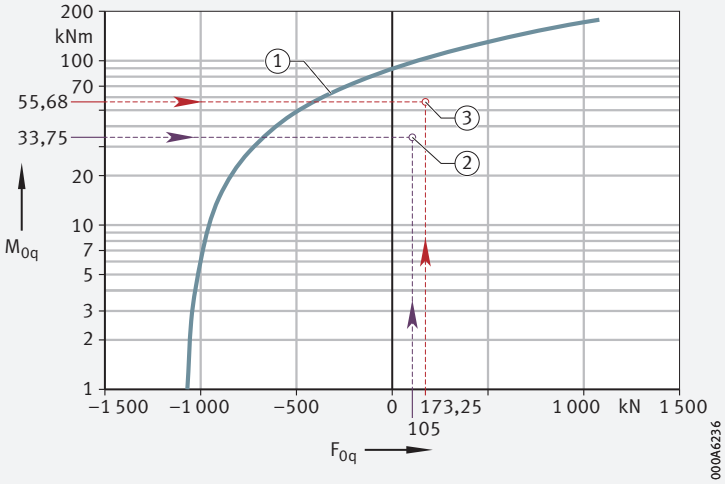

15 *Static limiting load diagram for fixing screws – example for crossed roller bearing SX011860*

M_{0q} = *equivalent tilting moment load (static)*

F_{0q} = *equivalent axial bearing load (static)*

① *Screw curve*

② *Load point for screws of normal grade (10.9)*

③ *Load point for screws of grade 8.8*

Checking the static load carrying capacity of the screws

The static load carrying capacity of the screw is limited by its proof stress.

For applications with and without radial load

The equivalent static bearing loads F_{0q} and M_{0q} must be determined.

Using the values F_{0q} and M_{0q}, the load point is then determined in the static limiting load diagram for fixing screws, see diagrams in product tables ➤ *1138*.

The load point must be below the appropriate screw curve.

Radial load and static load carrying capacity of the screws

If radial loads occur in uncentred bearing rings, the screw connections must prevent displacement of the bearing rings on the adjacent construction.

In order to check this:

- multiply the radial bearing load by an application factor f_A ➤ *1118* *4*
- compare the values determined with the maximum permissible radial load $F_{r\,per}$

The maximum radial load $F_{r\,per}$ on the fixing screws is dependent on their friction locking and not on the radial load carrying capacity of the bearing.

If the radial load on the bearing is higher than the friction locking of the fixing screws or very high radial loads are present ($F_r/F_a > 4$), please contact us.

Checking the dynamic load carrying capacity of the screws

The dynamic load carrying capacity of the screws corresponds to the fatigue strength of the screw.

Dynamic load carrying capacity

Based on the dynamic loads present, the equivalent loads F_{0q} and M_{0q} are determined.

Instead of the application factor f_A, the operating load must always be increased by the following factor:

- grade 8.8 (factor 1,8),
  grade 10.9 (factor 1,6),
  grade 12.9 (factor 1,5)

The load carrying capacity must then be checked in the static limiting load diagram for the fixing screws ➤ *1136*.

The load point must be below the appropriate screw curve.

1.15 Minimum load

In order to prevent damage due to slippage, a minimum load is required

In order that no slippage occurs between the contact partners, the crossed roller bearings must be constantly subjected to a sufficiently high load. In most cases, however, the load is already sufficiently high due to the weight of the supported parts and the external forces.

1.16 Design of bearing arrangements

The design of the adjacent construction has a considerable influence on the function of the bearings

Crossed roller bearings SX can support high loads. Due to the X arrangement of the cylindrical rollers, these bearings can support axial forces in both directions, radial loads, tilting moment loads and any combinations of loads. In order that these advantages can be utilised comprehensively, the adjacent construction must be designed so that it is appropriately rigid. The bearing rings must always be rigidly and uniformly supported over the circumference and width of the rings ➤*1126*|*16*.

The adjacent construction must be designed only in accordance with the information in this section. Any deviations from the specifications, material strength and adjacent components will considerably reduce the load carrying capacity and operating life of the bearings.

16
Uniform support of the bearing rings by the adjacent construction

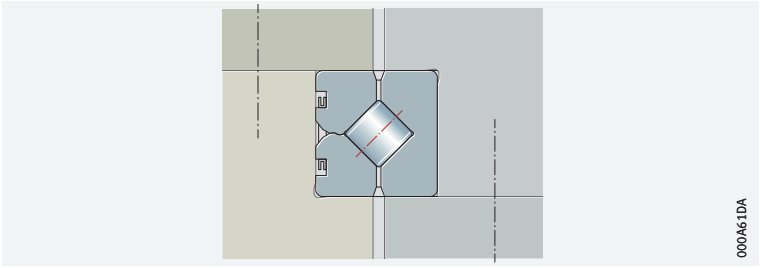

Shaft and housing tolerances

For normal applications, the tolerance class K7 Ⓔ for the housing and h7 Ⓔ for the shaft are sufficient ➤*1126*|*5* and ➤*1127*|*6*.

In precision applications, the bearing seat in the housing should be designed to tolerance class K6 Ⓔ and on the shaft to h6 Ⓔ ➤*1126*|*5* and ➤*1127*|*6*.

5
Mounting tolerances for the shaft

Nominal dimension d_i mm		Tolerance classes			
>	≦	h6		h7	
		Upper deviation µm	Lower deviation µm	Upper deviation µm	Lower deviation µm
65	80	0	−19	0	−30
80	100	0	−22	0	−35
100	120	0	−22	0	−35
120	140	0	−25	0	−40
140	160	0	−25	0	−40
160	180	0	−25	0	−40

continued ▼

5 *Mounting tolerances for the shaft*

Nominal dimension d_i mm		Tolerance classes			
>	≦	h6		h7	
		Upper deviation µm	Lower deviation µm	Upper deviation µm	Lower deviation µm
180	200	0	−29	0	−46
200	225	0	−29	0	−46
225	250	0	−29	0	−46
250	280	0	−32	0	−52
280	315	0	−32	0	−52
315	355	0	−36	0	−57
355	400	0	−36	0	−57
400	450	0	−40	0	−63
450	500	0	−40	0	−63

continued ▲

6 *Mounting tolerances for the housing bore*

Nominal dimension D_a mm		Tolerance classes			
>	≦	K6		K7	
		Upper deviation µm	Lower deviation µm	Upper deviation µm	Lower deviation µm
80	100	+4	−18	+10	−25
100	120	+4	−18	+10	−25
120	140	+4	−21	+12	−28
140	160	+4	−21	+12	−28
160	180	+4	−21	+12	−28
180	200	+5	−24	+13	−33
200	225	+5	−24	+13	−33
225	250	+5	−24	+13	−33
250	280	+5	−27	+16	−36
280	315	+5	−27	+16	−36
315	355	+7	−29	+17	−40
355	400	+7	−29	+17	−40
400	450	+8	−32	+18	−45
450	500	+8	−32	+18	−45
500	560	0	−44	0	−70
560	630	0	−44	0	−70

Location using clamping rings

For the location of crossed roller bearings SX, clamping rings have proved effective ➤ *1129* | *17*.

The bearing rings must always be rigidly and uniformly supported over the circumference and width of the rings.

The thickness of the clamping rings and mounting flanges must not be less than the minimum thickness s.

Counterbores to DIN 74, type J, for screws to DIN 6912 are permissible. For deeper counterbores, the thickness of the clamping ring s must be increased by the additional counterbore depth.

Mounting dimensions ➤ *1128* | *7* and ➤ *1129* | *17*. Minimum strength of clamping rings ➤ *1128*.

Bearing seat depth

In order that the clamping rings retain the bearing securely, the bearing seat depth t must be in accordance with the specification ➤*1128*| ▦ *7* and ➤*1129*| ⧉ *17*.

The depth of the bearing seat influences the bearing clearance and the rotational resistance.

Bearings with preload (suffix VSP) have a considerably higher rotational resistance.

If particular requirements for rotational resistance apply, the depth t must be produced to match the relevant height of the bearing ring. It has proved effective to tolerance the depth t to deviations that are the same as or further restricted compared to the dimension h in the product tables. For safety, internal tests should in any case be carried out.

Minimum strength of clamping rings

For screws of grade 10.9, the minimum strength under the screw heads or nuts must be 500 N/mm^2. Seating washers are not necessary for these screws.

For fixing screws of grade 12.9, the minimum strength must not be less than 850 N/mm^2, otherwise quenched and tempered seating washers under the screw heads or quenched and tempered nuts must be used.

▦ *7*
Mounting dimensions

Designation	Mounting dimensions in mm									
	d_i h7 (h6)	D_a K7 (K6)	t	s min.	d_{Ra}	d_{Ri}	D_{Ri}	D_{Ra}	L_i max.	L_a min.
SX011814	70	90	10 –0,005 –0,015	8	78	42	82	118	60	100
SX011818	90	115	13 –0,005 –0,020	10	100	61	104	144	80	125
SX011820	100	125	13 –0,005 –0,020	10	110	71	114	154	90	135
SX011824	120	150	16 –0,005 –0,025	12	132	84	138	186	108	162
SX011828	140	175	18 –0,005 –0,030	14	154	94	160	221	124	191
SX011832	160	200	20 –0,02 –0,05	15	177	111	183	249	144	216
SX011836	180	225	22 –0,02 –0,05	17	199	121	205	284	160	245
SX011840	200	250	24 –0,02 –0,06	18	221	139	229	311	180	270
SX011848	240	300	28 –0,02 –0,06	21	269	166	274	374	216	324
SX011860	300	380	38 –0,04 –0,10	29	335	201	345	479	268	412
SX011868	340	420	38 –0,04 –0,10	29	375	241	385	519	308	452
SX011880	400	500	46 –0,04 –0,10	35	445	275	455	625	360	540
SX0118/500	500	620	56 –0,04 –0,10	42	554	350	566	700	452	668

17
Clamping rings, bearing seat depth, mounting dimensions

① *Slots, threaded extraction hole or similar for dismounting purposes*

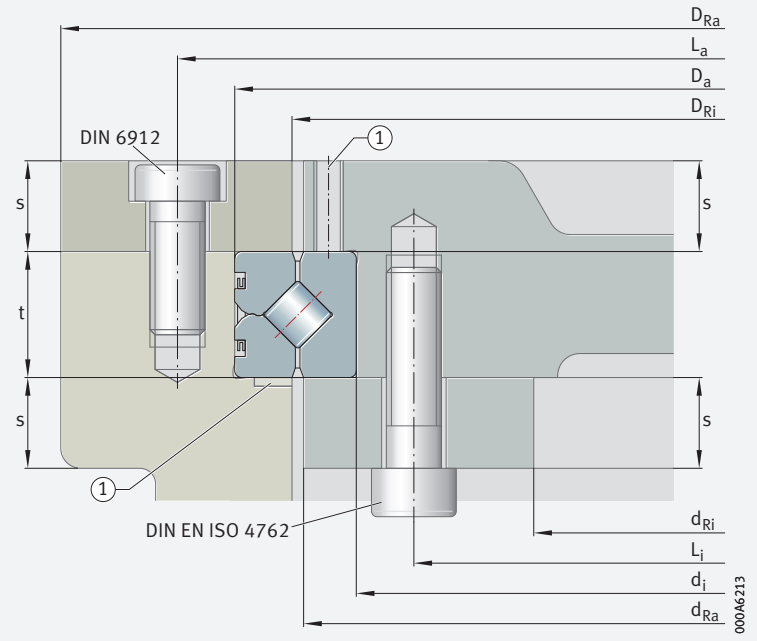

Fixing screws

For the location of the bearing rings or clamping rings, screws of grade 10.9 are suitable ➤*1129*|▦*8*.

Any deviations from the recommended size, grade and quantity of screws will considerably reduce the load carrying capacity and operating life of the bearings.

For screws of grade 12.9, the minimum strength of the clamping rings must be achieved or quenched and tempered seating washers must be used.

8
Fixing screws

Crossed roller bearings	Fixing screws Grade 10.9		Tightening torque
	Dimension	Quantity	M_A Nm
SX011814	M5	18	7
SX011818	M5	24	7
SX011820	M5	24	7
SX011824	M6	24	11,7
SX011828	M8	24	27,8
SX011832	M8	24	27,8
SX011836	M10	24	55,6
SX011840	M10	24	55,6
SX011848	M12	24	98,4
SX011860	M16	24	247
SX011868	M16	24	247
SX011880	M20	24	481
SX0118/500	M24	24	831

Securing of screws

Normally, the screws are adequately secured by the correct preload ➤ *1130* | ▦ *9* and ➤ *1130* | ▦ *10*. If regular shock loads or vibrations occur, however, additional securing of the screws may be necessary.
Not every method of securing screws is suitable for crossed roller bearings. Never use spring washers or split washers.

General information on securing of screws is given in DIN 25201-4:2004. If these are to be used, please consult the relevant companies.

▦ **9**
Tightening torques M_A for the torque-controlled tightening of socket headless screws

Fixing screw	Clamping cross-section A_S mm²	Core cross-section A_{d3} mm²	Tightening torque M_A [1] in Nm for grade		
			8.8	10.9	12.9
M4	8,78	7,75	2,25	3,31	3,87
M5	14,2	12,7	4,61	6,77	7,92
M6	20,1	17,9	7,8	11,5	13,4
M8	36,6	32,8	19,1	28	32,8
M10	58	52,3	38	55,8	65,3
M12	84,3	76,2	66,5	97,7	114
M14	115	105	107	156	183
M16	157	144	168	246	288
M18	192	175	229	336	394
M20	245	225	327	481	562
M22	303	282	450	661	773
M24	353	324	565	830	972

1) *M_A in accordance with guideline VDI 2230 (February 2003) for $\mu_K = 0,08$ and $\mu_G = 0,12$.*

▦ **10**
Assembly preload forces F_M for the torque-controlled tightening of socket headless screws

Fixing screw	Clamping cross-section A_S mm²	Core cross-section A_{d3} mm²	Mounting preload force F_M [1] in kN for grade		
			8.8	10.9	12.9
M4	8,78	7,75	4,05	5,95	6,96
M5	14,2	12,7	6,63	9,74	11,4
M6	20,1	17,9	9,36	13,7	16,1
M8	36,6	32,8	17,2	25,2	29,5
M10	58	52,3	27,3	40,2	47
M12	84,3	76,2	39,9	58,5	68,5
M14	115	105	54,7	80,4	94,1
M16	157	144	75,3	111	129
M18	192	175	91,6	134	157
M20	245	225	118	173	202
M22	303	282	147	216	253
M24	353	324	169	249	291

1) *F_M in accordance with guideline VDI 2230 (February 2003) for $\mu_G = 0,12$.*

1.17 Mounting and dismounting

Mounting of crossed roller bearings

The bores and edges of the adjacent components must be free from burrs. The support surfaces for the bearing rings must be clean.

The seating and locating surfaces for the bearing rings on the adjacent construction must be lightly oiled or greased.

Lightly oil the thread of the fixing screws in order to prevent varying friction factors (do not oil or grease screws that will be secured by means of adhesive).

Ensure that all adjacent components and lubrication ducts are free from cleaning agents, solvents and washing emulsions. The bearing seat surfaces can rust or the raceway system can become contaminated.

Mounting forces must only be applied to the bearing ring to be mounted; forces must never be directed through the rolling elements or seals. Avoid direct blows on the bearing rings in all cases.

Locate the bearing rings consecutively and without application of any external load.

The outer ring is split and is held together by three retaining rings ① ➤*1131*|⧉ *18*. Never apply tensile loads to the retaining rings.

Locating the outer bearing ring

Mounting of the ring ➤*1131*|⧉ *18*:

- Insert or press the bearing ② into the external adjacent construction ③ with the outer ring first
- Position the external clamping ring ④
- Insert the fixing screws ⑤ in the clamping ring and tighten in steps up to the specified tightening torque M_A
  - tighten the screws in a crosswise sequence in order to prevent unacceptable fluctuations in the screw tensioning forces
  - tightening torques M_A for fixing screws ➤*1130*|▦ *9*

⧉ **18**
Locating the outer bearing ring

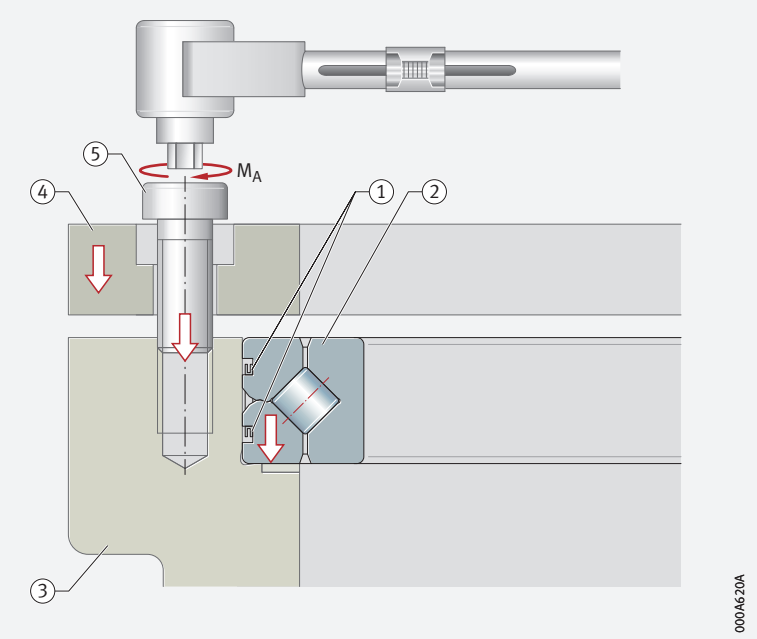

Locating the inner bearing ring

Mounting of the ring ➤*1132*| *19*:

- Insert the bearing ② into the internal adjacent construction ⑥
- Position the internal clamping ring ⑦
- Insert the fixing screws ⑧ in the clamping ring and tighten in steps up to the specified tightening torque M_A
  – tighten the screws in a crosswise sequence in order to prevent unacceptable fluctuations in the screw tensioning forces

19
Locating the inner bearing ring

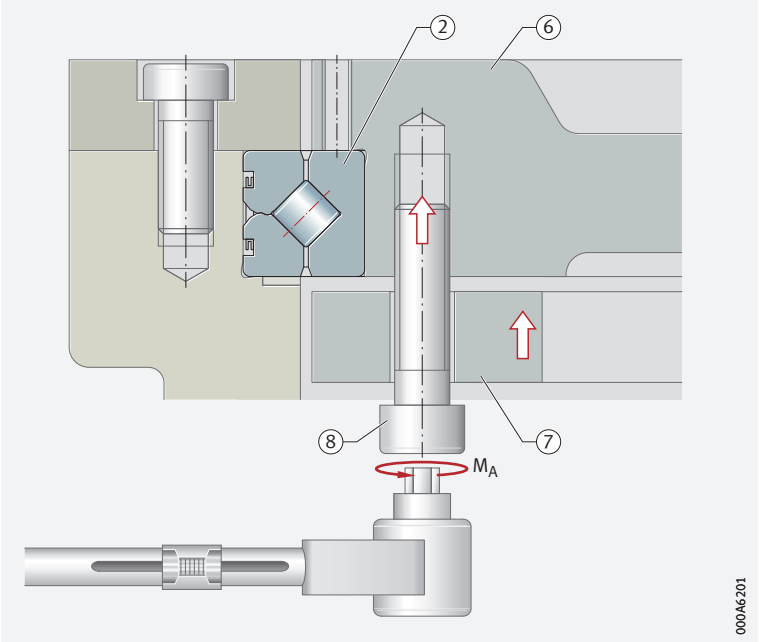

Checking the function

Once mounting is complete, the operation of the mounted crossed roller bearing must be checked. If the bearing runs irregularly or roughly, or the temperature in the bearing shows an unusual increase, the bearing must be dismounted, checked and mounted again in accordance with the mounting guidelines described.

Checking the running accuracy

✎ Possible causes of deviations in values

The running accuracy must be checked by means of a dial gauge. The corresponding values are taken from the mounting drawing or the product tables. Deviations from the values may be the result of:

- inaccuracies in the adjacent construction
- braced bearings due to incorrectly tightened clamping rings, fixing screws or locknuts

Checking the rotational resistance

✎ Factors influencing the rotational resistance

The rotational resistance is essentially determined by:

- the rolling resistance of the rolling elements
- the internal clearance or bearing preload
- the friction of the spacers
- the friction of the seals
- the grease
- a deformed or defective adjacent construction
- errors during mounting

Preload, rotational resistance, bearing temperature

Due to the preload in the rolling element system, the rotational resistance is higher than in a bearing with clearance. At higher speeds, a high preload can lead to generation of significant heat in the bearing.
In such applications, tests must be carried out if necessary with bearings preloaded to various values.

Checking the bearing temperature

Possible causes of high temperatures

After commissioning, the temperature in the bearing can increase; in the case of grease lubrication, this may continue until the grease is evenly distributed in the bearing. A further increase or unusually high temperatures may be caused by one of the following:

- The bearing is lubricated using an unsuitable grease
- There is too much lubricant in the bearing
- The bearing load is too high
- The bearing is mounted unevenly
- The adjacent construction deviates from the specifications

Schaeffler Mounting Handbook

Rolling bearings must be handled with great care

Rolling bearings are well-proven precision machine elements for the design of economical and reliable bearing arrangements, which offer high operational security. In order that these products can function correctly and achieve the envisaged operating life without detrimental effect, they must be handled with care.

The Schaeffler Mounting Handbook MH 1 gives comprehensive information about the correct storage, mounting, dismounting and maintenance of rotary rolling bearings *https://www.schaeffler.de/std/1D53*.
It also provides information which should be observed by the designer, in relation to the mounting, dismounting and maintenance of bearings, in the original design of the bearing position. This book is available from Schaeffler on request.

1.18 Legal notice regarding data freshness

✎ The further development of products may also result in technical changes to catalogue products

Of central interest to Schaeffler is the further development and optimisation of its products and the satisfaction of its customers. In order that you, as the customer, can keep yourself optimally informed about the progress that is being made here and with regard to the current technical status of the products, we publish any product changes which differ from the printed version in our electronic product catalogue.

§ We therefore reserve the right to make changes to the data and illustrations in this catalogue. This catalogue reflects the status at the time of printing. More recent publications released by us (as printed or digital media) will automatically precede this catalogue if they involve the same subject. Therefore, please always use our electronic product catalogue to check whether more up-to-date information or modification notices exist for your desired product.

Link to electronic product catalogue

The following link will take you to the Schaeffler electronic product catalogue: *https://medias.schaeffler.com*.

1.19 Further information

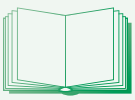

In addition to the data in this chapter, the following chapters in Technical principles must also be observed in the design of bearing arrangements:

- Determining the bearing size ➤*34*
- Rigidity ➤*54*
- Friction and increases in temperature ➤*56*
- Speeds ➤*64*
- Bearing data ➤*97*
- Lubrication ➤*70*
- Sealing ➤*185*
- Design of bearing arrangements ➤*141*
- Mounting and dismounting ➤*194*



Crossed roller bearings

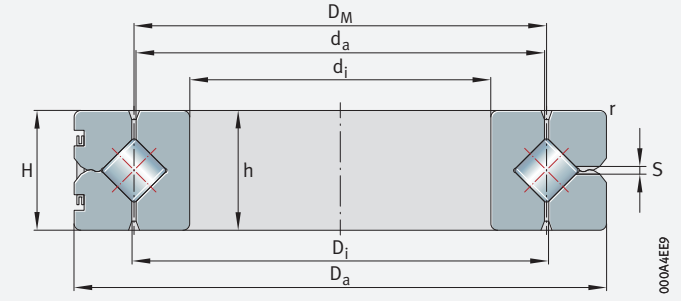

SX

d_i = 70 – 160 mm

Main dimensions			Basic load ratings				Limiting speeds				Mass	Designation	Dimensions identical to deep groove ball bearing 618
d_i	D_a	H[1]	axial		radial[2]		with standard clearance		with preload		m	➤*1115|1.12* ➤*1115|1.13*	
			dyn. C_a	stat. C_{0a}	dyn. C_r	stat. C_{0r}	n_G oil	n_G grease	n_G oil	n_G grease			
K6	h6		kN	kN	kN	kN	min^{-1}	min^{-1}	min^{-1}	min^{-1}	≈ kg		
70 +0,004 −0,015	90 0 −0,022	10 +0,06 −0,06	16,6	52	11,8	25,5	1 910	955	955	475	0,3	**SX011814**	61814
90 +0,004 −0,018	115 0 −0,022	13 +0,06 −0,06	26,5	87	18,9	43	1 500	750	750	375	0,4	**SX011818**	61818
100 +0,004 −0,018	125 0 −0,025	13 +0,06 −0,06	28	97	20	47,5	1 360	680	680	340	0,5	**SX011820**	61820
120 +0,004 −0,018	150 0 −0,025	16 +0,06 −0,06	39,5	140	28	69	1 130	565	565	280	0,8	**SX011824**	61824
140 +0,004 −0,021	175 0 −0,025	18 +0,06 −0,06	64	223	45,5	109	975	485	485	240	1,1	**SX011828**	61828
160 +0,004 −0,021	200 0 −0,029	20 +0,10 −0,10	69	255	49	126	850	425	425	210	1,7	**SX011832**	61832

medias *https://www.schaeffler.de/std/1F9A*

[1] H = section height of bearing, h = height of individual ring.

[2] Basic load ratings, radial: for radial loads only.

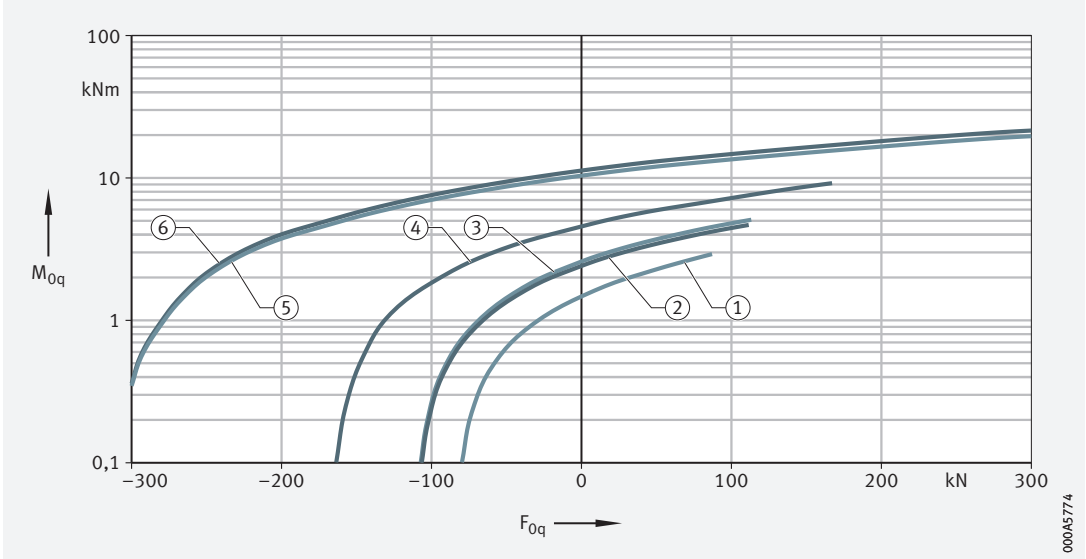

Static limiting load diagrams for fixing screws – compressive load

Dimensions							Running accuracy		Normal clearance				Low clearance RL0		Preload VSP		
d_i	D_M	$h^{1)}$	d_a	D_i	r	S	radial	axial	Radial clearance		Axial tilting clearance		Radial clearance	Preload			Position: see diagram
					min.				min.	max.	min.	max.	max.	max.	min.	max.	
70	80	10 0 −0,01	79,5	80,5	0,6	1,2	0,01	0,01	0,003	0,015	0,006	0,03	0,003	0,006	0,003	0,015	①
90	102	13 0 −0,01	101,5	102,5	1	1,2	0,01	0,01	0,003	0,015	0,006	0,03	0,003	0,006	0,003	0,015	②
100	112	13 0 −0,01	111,5	112,5	1	1,2	0,01	0,01	0,005	0,02	0,01	0,04	0,004	0,008	0,005	0,02	③
120	135	16 0 −0,01	134,4	135,6	1	1,5	0,01	0,01	0,005	0,02	0,01	0,04	0,004	0,008	0,005	0,02	④
140	157	18 0 −0,01	156,3	157,7	1,1	1,5	0,015	0,01	0,005	0,02	0,01	0,04	0,004	0,008	0,005	0,02	⑤
160	180	20 0 −0,025	179,2	180,8	1,1	1,5	0,015	0,01	0,005	0,02	0,01	0,04	0,004	0,008	0,005	0,02	⑥

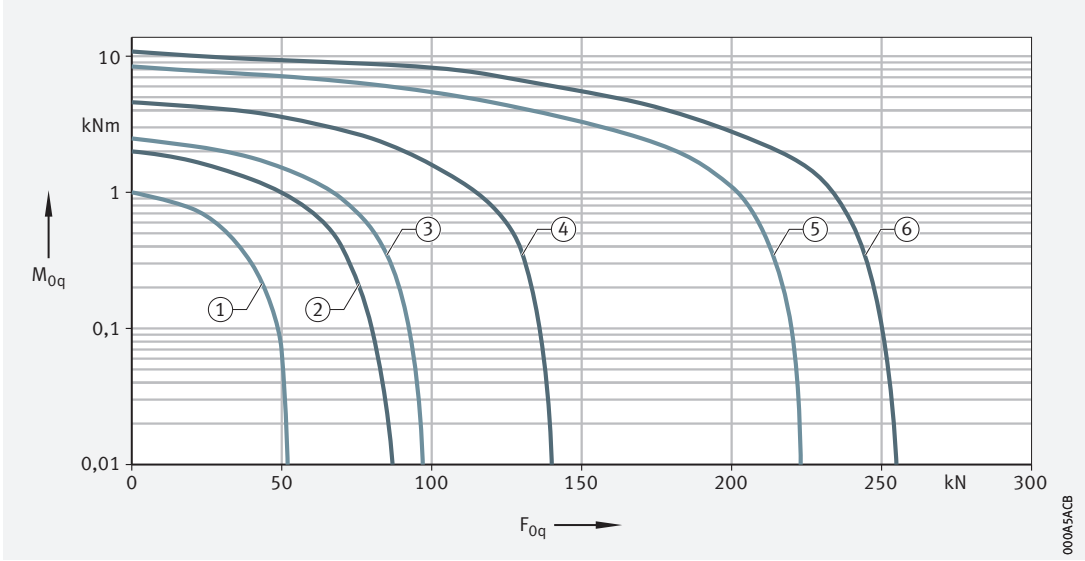

Static limiting load diagrams for raceway – compressive load

Crossed roller bearings

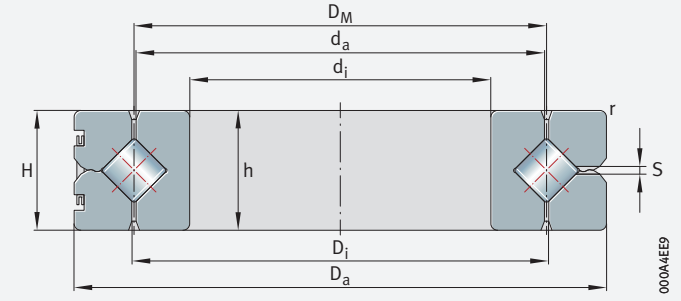

SX

d_i = 180 – 500 mm

Main dimensions			Basic load ratings				Limiting speeds				Mass	Designation	Dimensions identical to deep groove ball bearing 618
d_i	D_a	H[1]	axial		radial[2]		with standard clearance		with preload		m	➤*1115|1.12* ➤*1115|1.13*	
			dyn. C_a	stat. C_{0a}	dyn. C_r	stat. C_{0r}	n_G oil	n_G grease	n_G oil	n_G grease			
K6	h6		kN	kN	kN	kN	min^{-1}	min^{-1}	min^{-1}	min^{-1}	≈ kg		
180 +0,004 −0,021	225 0 −0,029	22 +0,10 −0,10	98	360	70	177	755	375	375	185	2,3	**SX011836**	61836
200 +0,004 −0,024	250 0 −0,029	24 +0,10 −0,10	104	400	74	197	680	340	340	170	3,1	**SX011840**	61840
240 +0,005 −0,024	300 0 −0,032	28 +0,10 −0,10	149	600	106	295	565	280	280	140	5,3	**SX011848**	61848
300 +0,005 −0,027	380 0 −0,036	38 +0,14 −0,14	245	990	174	485	450	225	225	110	12	**SX011860**	61860
340 +0,007 −0,029	420 0 −0,04	38 +0,14 −0,14	265	1 130	187	550	400	200	200	100	13,5	**SX011868**	61868
400 +0,007 −0,029	500 0 −0,04	46 +0,15 −0,15	385	1 660	275	810	340	170	170	85	24	**SX011880**	61880
500 +0,008 −0,032	620 0 −0,044	56 +0,16 −0,16	560	2 550	395	1 250	275	135	135	65	44	**SX0118/500**	618/500

medias *https://www.schaeffler.de/std/1F9A*

[1] H = section height of bearing, h = height of individual ring.

[2] Basic load ratings, radial: for radial loads only.

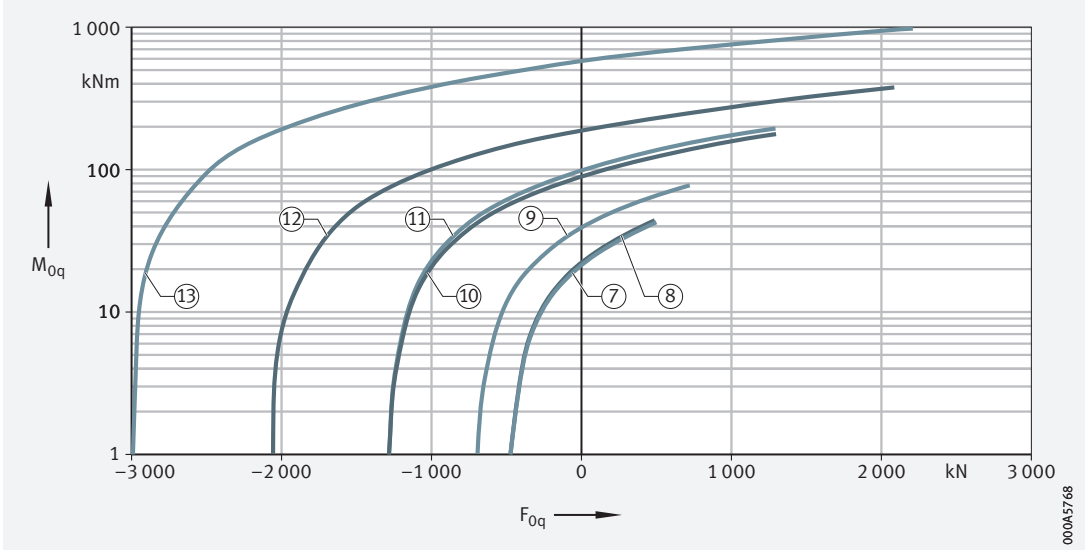

Static limiting load diagrams for fixing screws – compressive load

Dimensions							Running accuracy		Normal clearance				Low clearance RL0		Preload VSP		
d_i	D_M	$h^{1)}$	d_a	D_i	r	S	radial	axial	Radial clearance		Axial tilting clearance		Radial clearance	Preload			Position: see diagram
					min.				min.	max.	min.	max.	max.	max.	min.	max.	
180	202	22 0 −0,025	201,2	202,8	1,1	2	0,015	0,01	0,005	0,025	0,01	0,05	0,005	0,01	0,005	0,025	⑦
200	225	24 0 −0,025	224,2	225,8	1,5	2	0,015	0,01	0,005	0,025	0,01	0,05	0,005	0,01	0,005	0,025	⑧
240	270	28 0 −0,025	269,2	270,8	2	2	0,02	0,01	0,01	0,03	0,02	0,06	0,005	0,01	0,005	0,025	⑨
300	340	38 0 −0,05	339,2	340,8	2,1	2,5	0,02	0,01	0,01	0,04	0,02	0,08	0,005	0,01	0,005	0,025	⑩
340	380	38 0 −0,05	379,2	380,8	2,1	2,5	0,025	0,01	0,01	0,04	0,02	0,08	0,005	0,01	0,005	0,025	⑪
400	450	46 0 −0,05	449	451	2,1	2,5	0,03	0,01	0,01	0,05	0,02	0,1	0,005	0,01	0,005	0,025	⑫
500	560	56 0 −0,05	558,8	561,2	3	2,5	0,04	0,01	0,015	0,06	0,03	0,12	0,006	0,012	0,005	0,03	⑬

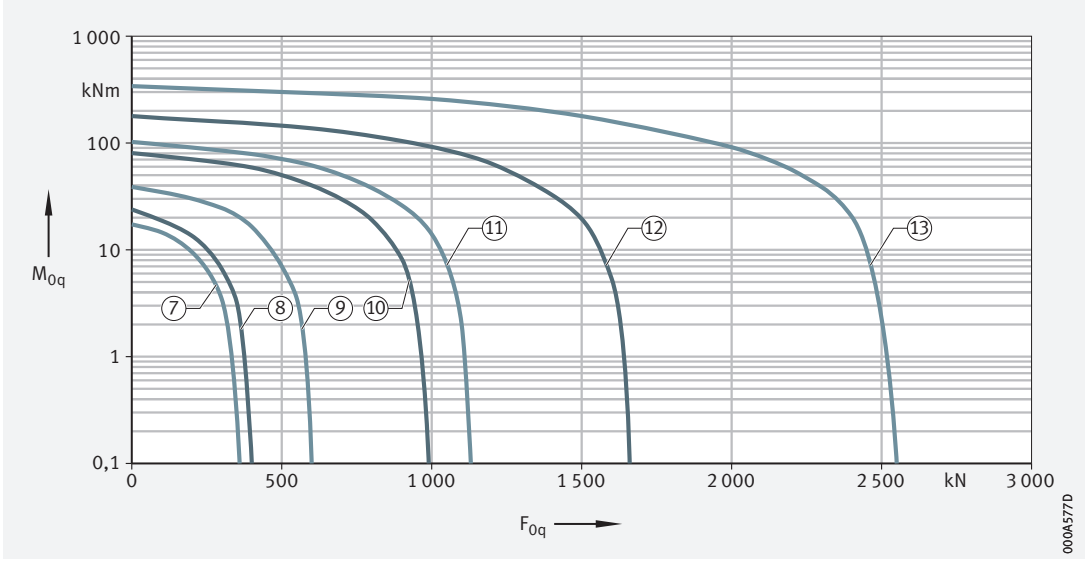

Static limiting load diagrams for raceway – compressive load

Super precision bearings



1 Bearings for main spindles 1142

1.1 General features 1142

1.2 Super precision angular contact ball bearings 1142

1.3 Super precision cylindrical roller bearings 1143

1.4 Super precision axial bearings 1144

Product tables 1146

Super precision angular contact ball bearings 1146

Super precision angular contact ball bearings in Direct Lube design 1210

Super precision cylindrical roller bearings, single row 1228

Super precision cylindrical roller bearings, double row 1236

Super precision axial angular contact ball bearings 2344 1242

Super precision angular contact ball bearings BAX 1244

2 Bearings for screw drives 1248

2.1 General features 1248
2.2 Axial angular contact ball bearings 1248
2.3 Needle roller/axial cylindrical roller bearings 1252
2.4 Accessories 1254

Product tables 1256

Axial angular contact ball bearings with fixing holes 1256
Axial angular contact ball bearings with fixing holes, less stringent tolerances 1264
Axial angular contact ball bearings with fixing holes, matched pair 1266
Axial angular contact ball bearings without fixing holes 1268
Axial angular contact ball bearings without fixing holes, less stringent tolerances 1276
Axial angular contact ball bearings without fixing holes, matched pair 1278
Axial angular contact ball bearings, single direction, open 1280
Axial angular contact ball bearings, single direction, sealed on both sides 1294
Angular contact ball bearing units, for screw mounting 1300
Double row axial angular contact ball bearings with flange, with fixing holes 1302
Triple row axial angular contact ball bearings with flange, with fixing holes 1306
Needle roller/axial cylindrical roller bearings, light series, with fixing holes 1310
Needle roller/axial cylindrical roller bearings, heavy series, with fixing holes 1314
Needle roller/axial cylindrical roller bearings, light series, without fixing holes 1320
Needle roller/axial cylindrical roller bearings, heavy series, without fixing holes 1324

Product tables 1330

Seal carrier assemblies for ZARF 1330
Precision locknuts, for axial clamping 1332
Precision locknuts, for radial clamping 1333
Sockets 1335

3 Bearings for combined loads 1338

3.1 General features 1338
3.2 Axial/radial bearings, axial angular contact ball bearings 1338
3.3 Axial/radial bearings with incremental angular measuring system 1340
3.4 Axial/radial bearings with absolute value angular measuring system 1341

Product tables 1344

Axial/radial bearings YRT 1344
Axial/radial bearings YRTC 1346
Axial/radial bearings YRTS 1348
Axial angular contact ball bearings ZKLDF 1350
Axial/radial bearings YRTCM, with incremental angular measuring system 1352
Axial/radial bearings YRTSM, with incremental angular measuring system 1354
Axial/radial bearings YRTCMA, with absolute value angular measuring system 1356
Axial/radial bearings YRTSMA, with absolute value angular measuring system 1358

4 App for super precision bearings 1360

4.1 PrecisionDesk 1360

1 Bearings for main spindles

1.1 General features

✎ *Design variants*

Bearings for main spindles are available as:

- super precision angular contact ball bearings ➤*1143*|*1*
  - single row, as single bearings or in sets
  - contact angle 15°, 25°
  - with large or small balls
  - rolling elements made from rolling bearing steel or ceramic
  - rings made from rolling bearing steel or Cronidur
  - Direct Lube bearings
- super precision cylindrical roller bearings ➤*1143*|*2*
  - single row
  - double row
  - rolling elements made from rolling bearing steel or ceramic
  - cages made from brass, polyamide or PEEK
- super precision axial bearings, i. e. super precision axial angular contact ball bearings 2344 ➤*1144*|*3*, super precision angular contact ball bearings BAX ➤*1145*|*4*
  - double direction
  - contact angle 30°, 40°, 60°
  - rolling elements made from rolling bearing steel
  - rings made from rolling bearing steel
  - cages made from brass, laminated fabric

Product catalogue

The standard range of these bearings is described in detail in Spindle Bearing Catalogue SP 1 and in our electronic product catalogue ***medias*** *professional*.

✎ *Printed catalogue*

The Spindle Bearing Catalogue SP 1 can be requested from Schaeffler. Download and ordering at *https://www.schaeffler.de/std/1D58*.

✎ ***medias***

The following link will take you to the Schaeffler electronic product selection and information system: *https://medias.schaeffler.com*.

✎ *App for services*

The app “PrecisionDesk” offers extensive services for rotary and linear bearings of a super precision design and assists fitters and engineers in the selection and mounting of bearings. Further information on PrecisionDesk ➤*1360*, download *https://www.schaeffler.de/std/1D59*.

1.2 Super precision angular contact ball bearings

FAG super precision angular contact ball bearings are single row angular contact ball bearings with solid outer and inner rings, and ball and cage assemblies with solid window cages ➤*1143*|*1*. The dimensions are standardised.

✎ *Suitable for applications with very high guidance accuracy*

Due to their very narrow tolerances, the bearings are particularly suitable for applications involving the highest requirements for guidance accuracy, rigidity and speed suitability, such as bearing arrangements for main spindles in machine tools.

The product range of super precision angular contact ball bearings is presented in the product tables ➤*1146*|. In addition to the products listed therein, further designs are available by agreement.

1
Universal super precision angular contact ball bearings (universal spindle bearings)

α = *nominal contact angle*
F_a = *axial load*
F_r = *radial load*

① *Spindle bearing with balls made from rolling bearing steel*
② *Spindle bearing with balls made from ceramic, rings made from 100Cr6*
③ *Spindle bearing with balls made from ceramic, rings made from Vacrodur*

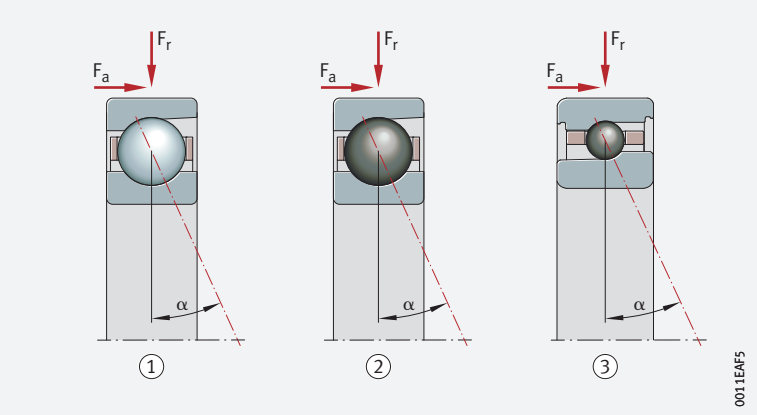

Extensive range for main spindle bearing arrangements, primarily in machine tools

This extensive product range gives the designer all possible scope for designing technically innovative, operationally secure and economical bearing arrangements. This results in significant performance improvements and cost savings as standard in machine tools. However, other machines, such as turbochargers for example, can benefit from these bearings.

Increased performance

In new designs, this can allow the machine manufacturer to achieve a unique position in the market. In existing designs too, refitting with FAG spindle bearings can still give further increases in the performance and profitability of machines.

1.3 Super precision cylindrical roller bearings

Features

FAG super precision cylindrical roller bearings comprise solid outer rings, solid inner rings with a tapered bore (taper 1:12) and cylindrical roller and cage assemblies with cages made from polyamide, brass or PEEK (polyetheretherketone) ➤ *1143*| *2*. The outer ring is removable and can thus be mounted separately from the rest of the bearing package. The inner ring is only removable in the case of series NNU49.

FAG super precision cylindrical roller bearings are also available by agreement with a cylindrical bore.

2
Super precision cylindrical roller bearings with tapered bore

F_r = *radial load*

① *Single row, N10*
② *Single row, ceramic rolling elements: HCN10*
③ *Double row, NN30, NNU49*
④ *Double row, NN30..-D*

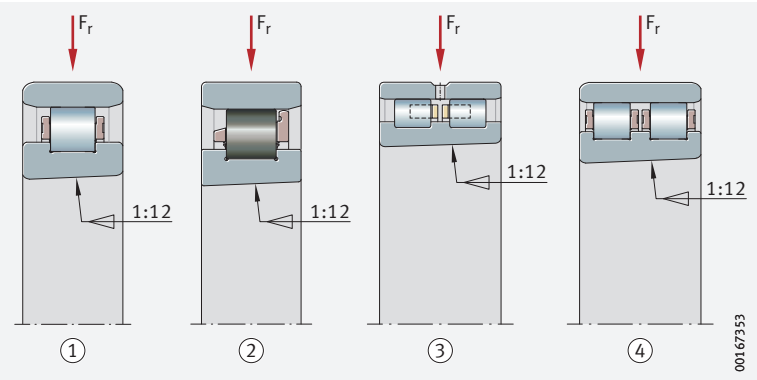

Areas of application

The single and double row bearings are used when the very highest precision is required under very high radial load. Typical areas of application include machine tools and printing machinery. The bearings facilitate bearing arrangements with very high precision, high radial rigidity and very high load carrying capacity. In machine tool building, they provide radial support for the main spindle.

Ideal non-locating bearings

Since variations in length during rotary motion can be compensated between the rollers and the ribless raceway without constraining forces, the cylindrical roller bearings are highly suitable as non-locating bearings. Axial forces are supported by axial bearings, such as double direction axial angular contact ball bearings or super precision angular contact ball bearings BAX. The standard series N10, HCN10 (single row) and NN30, NNU49 (double row) are an established part of the FAG super precision range ➤ *1228*.

Diameter ranges not shown in the catalogue are available by agreement.

X-life premium quality

X-life

The super precision cylindrical roller bearings N10 and NN30 in the X-life design have a higher load carrying capacity and thus a significantly increased bearing rating life. A newly developed plastic cage gives lower friction than the previous standard design with brass cage.

Increased customer benefits due to X-life

The advantages of this bearing design include:

- limiting speeds up to 35% higher
- running temperatures up to 12 K lower
- lower noise level
- lower lubricant demand
- longer grease operating life
- higher basic load ratings
- longer operating life of the bearings

The basic dynamic load ratings C are up to approx. 20% higher than those of the previous bearing designs and the basic bearing rating life L_{10} is up to 65% longer than the previous standard. As a result of the increase in the basic bearing rating life L_{10}, this gives a longer operating life of the bearings under the same operating conditions. If the rating life values are maintained, alternatively, higher loads can be applied to the bearing arrangement.

1.4 Super precision axial bearings

Super precision axial angular contact ball bearings 2344

Suitable for applications with very high precision and high axial loads

Double direction axial angular contact ball bearings of series 2344 in particular are very axially rigid super precision bearings preloaded clearance-free with restricted tolerances to class SP. The bearings are used when very high precision is required under high axial load.

3
Axial angular contact ball bearing 2344, double direction

α = *nominal contact angle*
F_r = *radial load*
F_a = *axial load*

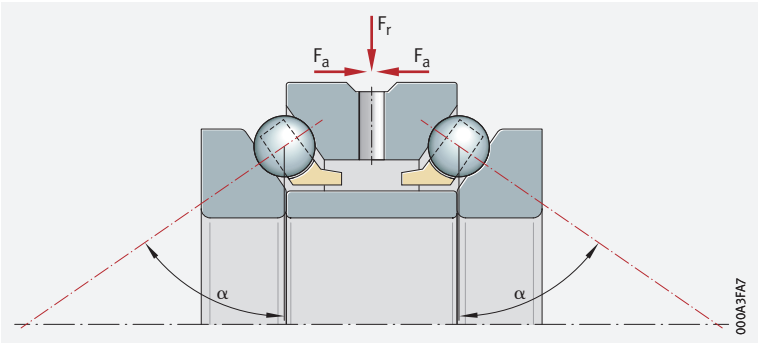

Features

These bearings without self-retention comprise solid shaft locating washers, a spacer ring, a housing locating washer and ball and cage assemblies with solid cages ➤ *1144* | *3*. The bearing parts are matched to each other and can be fitted separately, but must not be interchanged with parts from other bearings. Available designs of series 2344 ➤ *1242*.

Contact angle

Due to the contact angle of 60°, they can support high axial loads from both sides.

Super precision angular contact ball bearings BAX

Suitable for applications with high speeds and axial loads

Increased load carrying capacity normally brings with it a reduction in the maximum speed. Through the use of angular contact ball bearings BAX, it is possible to unify both requirements. Angular contact ball bearings BAX:

- can support high axial loads
- have similarly high limiting speeds to X-life cylindrical roller bearings
- have high rigidity
- can support axial loads only

The super precision angular contact ball bearings BAX conform to the accuracy class P4S and are generally supplied as ready-to-fit sets in the arrangement DB ➤1145 4. Available designs ➤1244.

4
Angular contact ball bearing BAX, ready-to-fit set in O arrangement

α = *nominal contact angle*
F_a = *axial load*

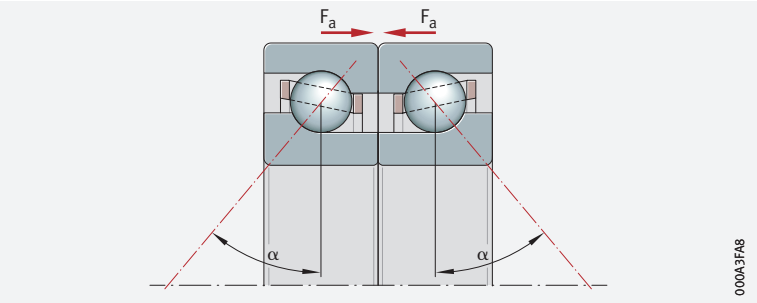

Contact angle

Super precision angular contact ball bearings BAX are available with a contact angle of 30° for high speed requirements or, for even higher rigidities, also with a contact angle of 40°. As a bearing set, they can support high axial loads from both sides.



Super precision angular contact ball bearings

Steel or ceramic balls
Steel or Cronidur rings
Open or sealed

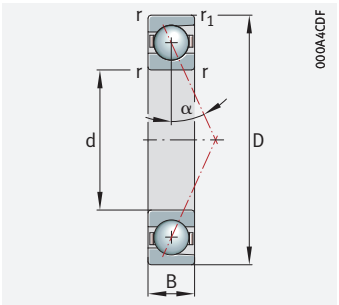

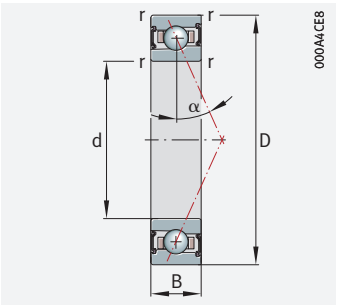

d = 10 – 10 mm

Main dimensions			Basic load ratings		Fatigue limit load	Limiting speeds[1]		Dimensions		Contact angle	Mass	Designation[2] [3]
d	D	B	dyn. C_r	stat. C_{0r}	C_{ur}	n_G grease	n_G oil[5]	r	r_1	α	m	
			kN	kN	N	min^{-1}	min^{-1}	min.	min.	°	≈ kg	
10	22	6	2,9	1,02	108	70 000	110 000	0,3	0,3	25	0,01	**B71900-E-T-P4S**
	22	6	3	1,07	113	75 000	120 000	0,3	0,3	15	0,01	**B71900-C-T-P4S**
	22	6	2,9	0,98	79	95 000	150 000	0,3	0,3	25	0,009	**HCB71900-E-T-P4S**
	22	6	1,7	0,62	66	95 000	140 000	0,3	0,3	25	0,01	**HS71900-E-T-P4S**
	22	6	1,79	0,65	69	100 000	160 000	0,3	0,3	15	0,01	**HS71900-C-T-P4S**
	22	6	3	1,02	82	110 000	160 000	0,3	0,3	15	0,009	**HCB71900-C-T-P4S**
	22	6	1,7	0,6	48	120 000	180 000	0,3	0,3	25	0,01	**HC71900-E-T-P4S**
	22	6	2,6	0,6	47	130 000	200 000	0,3	0,3	25	0,01	**XC71900-E-T-P4S**
	26	8	3,95	1,41	149	60 000	95 000	0,3	0,3	25	0,02	**B7000-E-T-P4S**
	26	8	4,1	1,47	155	67 000	100 000	0,3	0,3	15	0,02	**B7000-C-T-P4S**
	26	8	3,95	1,35	108	85 000	130 000	0,3	0,3	25	0,018	**HCB7000-E-T-P4S**
	26	8	2,35	0,89	95	85 000	130 000	0,3	0,3	25	0,021	**HS7000-E-T-P4S**
	26	8	2,47	0,94	99	90 000	140 000	0,3	0,3	15	0,021	**HS7000-C-T-P4S**
	26	8	4,15	1,4	113	95 000	140 000	0,3	0,3	15	0,018	**HCB7000-C-T-P4S**
	26	8	2,36	0,86	69	110 000	160 000	0,3	0,3	25	0,021	**HC7000-E-T-P4S**
	26	8	3,6	0,86	68	120 000	180 000	0,3	0,3	25	0,021	**XC7000-E-T-P4S**
	30	9	6,6	2,8	305	50 000	75 000	0,6	0,6	25	0,032	**B7200-E-T-P4S**
	30	9	6,9	2,95	315	56 000	85 000	0,6	0,6	15	0,032	**B7200-C-T-P4S**
	30	9	6,6	2,7	221	60 000	90 000	0,6	0,6	25	0,029	**HCB7200-E-T-P4S**
	30	9	7	2,8	229	67 000	100 000	0,6	0,6	15	0,029	**HCB7200-C-T-P4S**

medias *https://www.schaeffler.de/std/1F9A*

1) The limiting speeds are based on elastically preloaded single bearings.

2) Explanation of designations SP 1.

3) The bearings are also available with gap seals (type HSS, HCS, XCS or suffix 2RSD). Ordering examples: B7000-C-2RSD-T-P4S-UL and HSS7000-E-T-P4S-UL.

4) L = light preload; M = moderate preload; H = high preload.

5) Minimal quantity oil lubrication.

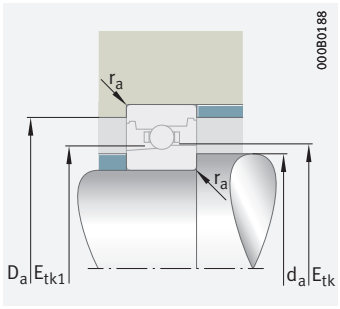

Mounting dimensions

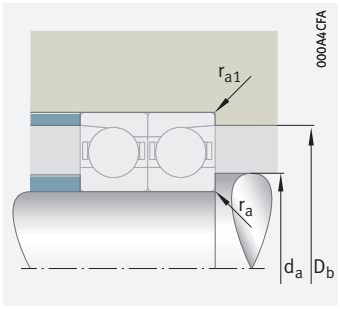

Mounting dimensions

	Mounting dimensions							Preload force[4] F_V			Lift-off force[4] K_{aE}			Axial rigidity[4] c_a		
d	d_a h12	D_a H12	r_a max.	r_{a1} max.	E_{tk} min.	E_{tk1} min.	E_{tk} E_{tk1} max.	L N	M N	H N	L N	M N	H N	L N/µm	M N/µm	H N/µm
10	13	19,5	0,3	0,1	14,4	14,4	15	17	74	163	50	226	521	27,1	47,7	67
	13	19,5	0,3	0,1	14,4	14,4	15	10	41	87	31	141	320	11	21,1	31,2
	13	19,5	0,3	0,1	14,4	14,4	15	5	35	85	16	104	260	20,4	39,9	56,5
	13	19,5	0,3	0,1	14,6	13,7	15	11	32	64	31	96	196	21,7	32,7	43
	13	19,5	0,3	0,1	14,6	13,7	15	7	20	39	20	63	132	8,8	14,1	19,6
	13	19,5	0,3	0,1	14,4	14,4	15	6	25	54	17	79	185	9,8	18,2	26,5
	13	19,5	0,3	0,1	14,6	13,7	15	7	22	45	21	65	133	21,6	32	41,7
	13	19,5	0,3	0,1	14,6	13,7	15	7	22	45	21	65	133	21,6	32	41,7
	14	22	0,3	0,1	15,7	15,7	16,8	21	99	223	61	298	698	27,6	49,2	69,1
	14	22	0,3	0,1	15,7	15,7	16,8	18	65	136	54	220	490	12,7	23	33,5
	14	22	0,3	0,1	15,7	15,7	16,8	12	57	130	33	167	392	25,1	44,6	61,6
	14	22	0,3	0,1	16,4	15,3	16,9	15	45	90	43	133	273	26,8	40,3	53
	14	22	0,3	0,1	16,4	15,3	16,9	9	28	55	28	89	185	10,9	17,4	24,1
	14	22	0,3	0,1	15,7	15,7	16,8	7	33	74	21	104	248	9,9	18,5	26,9
	14	22	0,3	0,1	16,4	15,3	16,9	10	31	62	30	91	185	26,6	39,5	51,4
	14	22	0,3	0,1	16,4	15,3	16,9	10	31	62	30	91	185	26,6	39,5	51,4
	14,5	25,5	0,6	0,3	18	18	19,2	32	141	314	94	429	995	35,8	63,2	88,8
	14,5	25,5	0,6	0,3	18	18	19,2	25	91	185	79	311	684	16,4	29,8	43,5
	14,5	25,5	0,6	0,3	18	18	19,2	18	82	185	52	243	564	32,8	57,2	78,9
	14,5	25,5	0,6	0,3	18	18	19,2	11	47	103	32	150	352	12,9	23,9	34,9

Super precision angular contact ball bearings

Steel or ceramic balls
Steel or Cronidur rings
Open or sealed

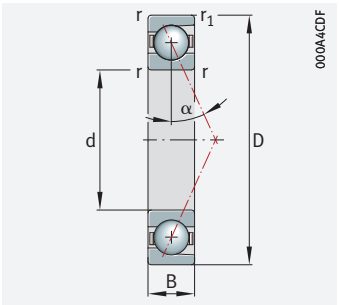

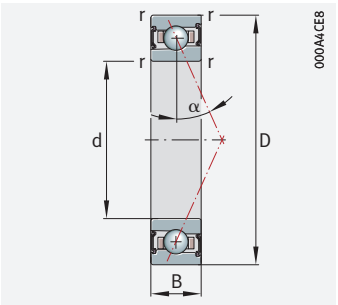

d = 12 – 12 mm

Main dimensions			Basic load ratings		Fatigue limit load	Limiting speeds[1]		Dimensions		Contact angle	Mass	Designation[2] [3]
d	D	B	dyn. C_r	stat. C_{0r}	C_{ur}	n_G grease	n_G oil[5]	r	r_1	α	m	
			kN	kN	N	min^{-1}	min^{-1}	min.	min.	°	≈ kg	
12	24	6	3,25	1,25	132	60 000	95 000	0,3	0,3	25	0,011	**B71901-E-T-P4S**
	24	6	3,4	1,31	139	67 000	100 000	0,3	0,3	15	0,011	**B71901-C-T-P4S**
	24	6	1,76	0,69	73	85 000	130 000	0,3	0,3	25	0,011	**HS71901-E-T-P4S**
	24	6	3,25	1,19	96	85 000	130 000	0,3	0,3	25	0,01	**HCB71901-E-T-P4S**
	24	6	1,85	0,72	76	90 000	140 000	0,3	0,3	15	0,011	**HS71901-C-T-P4S**
	24	6	3,4	1,25	101	95 000	140 000	0,3	0,3	15	0,01	**HCB71901-C-T-P4S**
	24	6	1,76	0,66	53	110 000	160 000	0,3	0,3	25	0,011	**HC71901-E-T-P4S**
	24	6	2,7	0,66	52	120 000	180 000	0,3	0,3	25	0,011	**XC71901-E-T-P4S**
	28	8	4,45	1,75	185	53 000	85 000	0,3	0,3	25	0,023	**B7001-E-T-P4S**
	28	8	4,65	1,83	194	60 000	90 000	0,3	0,3	15	0,023	**B7001-C-T-P4S**
	28	8	2,32	0,91	97	75 000	110 000	0,3	0,3	25	0,024	**HS7001-E-T-P4S**
	28	8	4,45	1,67	135	75 000	120 000	0,3	0,3	25	0,02	**HCB7001-E-T-P4S**
	28	8	2,45	0,96	102	80 000	130 000	0,3	0,3	15	0,024	**HS7001-C-T-P4S**
	28	8	4,7	1,75	141	85 000	130 000	0,3	0,3	15	0,02	**HCB7001-C-T-P4S**
	28	8	2,33	0,87	70	95 000	140 000	0,3	0,3	25	0,023	**HC7001-E-T-P4S**
	28	8	3,55	0,87	69	100 000	160 000	0,3	0,3	25	0,023	**XC7001-E-T-P4S**
	32	10	8,8	3,75	395	45 000	67 000	0,6	0,6	25	0,037	**B7201-E-T-P4S**
	32	10	9,1	3,9	410	50 000	75 000	0,6	0,6	15	0,037	**B7201-C-T-P4S**
	32	10	8,8	3,6	290	56 000	85 000	0,6	0,6	25	0,032	**HCB7201-E-T-P4S**
	32	10	9,1	3,7	300	63 000	95 000	0,6	0,6	15	0,032	**HCB7201-C-T-P4S**

medias *https://www.schaeffler.de/std/1F9A*

1) The limiting speeds are based on elastically preloaded single bearings.

2) Explanation of designations SP 1.

3) The bearings are also available with gap seals (type HSS, HCS, XCS or suffix 2RSD). Ordering examples: B7000-C-2RSD-T-P4S-UL and HSS7000-E-T-P4S-UL.

4) L = light preload; M = moderate preload; H = high preload.

5) Minimal quantity oil lubrication.

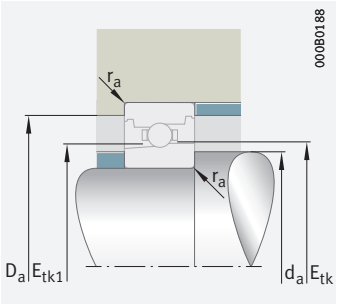

Mounting dimensions

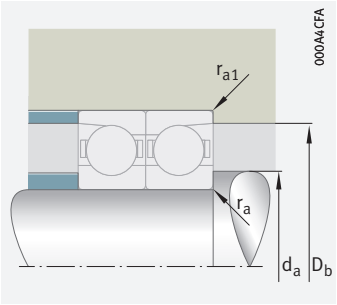

Mounting dimensions

	Mounting dimensions							Preload force[4] F_V			Lift-off force[4] K_{aE}			Axial rigidity[4] c_a		
d	d_a h12	D_a H12	r_a max.	r_{a1} max.	E_{tk} min.	E_{tk1} min.	E_{tk} E_{tk1} max.	L N	M N	H N	L N	M N	H N	L N/µm	M N/µm	H N/µm
12	15	21,5	0,3	0,1	16,4	16,4	17,2	18	80	179	53	245	567	30,8	54,4	76,5
	15	21,5	0,3	0,1	16,4	16,4	17,2	11	46	97	34	155	355	12,6	24,1	35,7
	15	21,5	0,3	0,1	16,6	15,7	17	11	33	67	32	99	203	23,1	34,7	45,6
	15	21,5	0,3	0,1	16,4	16,4	17,2	5	38	92	16	111	281	22,7	45,5	64,5
	15	21,5	0,3	0,1	16,6	15,7	17	7	21	41	21	66	137	9,4	15	20,8
	15	21,5	0,3	0,1	16,4	16,4	17,2	6	27	60	18	87	205	11,2	20,8	30,3
	15	21,5	0,3	0,1	16,6	15,7	17	8	23	46	22	68	138	22,9	34,1	44,3
	15	21,5	0,3	0,1	16,6	15,7	17	8	23	46	22	68	138	22,9	34,1	44,3
	16,5	24,5	0,3	0,1	17,9	17,9	18,8	23	109	248	66	328	775	31,8	57,2	80,3
	16,5	24,5	0,3	0,1	17,9	17,9	18,8	19	73	152	59	242	543	14,6	26,5	38,7
	16,5	24,5	0,3	0,1	18,4	17,3	18,9	15	44	88	43	131	268	26,7	40	52,6
	16,5	24,5	0,3	0,1	17,9	17,9	18,8	12	63	145	35	184	436	29	51,9	71,7
	16,5	24,5	0,3	0,1	18,4	17,3	18,9	9	27	54	27	87	181	10,8	17,3	23,9
	16,5	24,5	0,3	0,1	17,9	17,9	18,8	8	36	82	22	114	274	11,3	21,4	31,1
	16,5	24,5	0,3	0,1	18,4	17,3	18,9	10	30	61	29	89	181	26,4	39,2	50,9
	16,5	24,5	0,3	0,1	18,4	17,3	18,9	10	30	61	29	89	181	26,4	39,2	50,9
	16,5	27,5	0,6	0,3	19,6	19,6	21,1	47	193	423	137	588	1 342	42,8	73,9	103
	16,5	27,5	0,6	0,3	19,6	19,6	21,1	35	123	248	109	420	916	19,3	34,6	50,3
	16,5	27,5	0,6	0,3	19,6	19,6	21,1	26	112	248	76	332	757	39,2	66,8	91,6
	16,5	27,5	0,6	0,3	19,6	19,6	21,1	16	65	142	47	210	483	15,6	28,2	40,9

Super precision angular contact ball bearings

Steel or ceramic balls
Steel or Cronidur rings
Open or sealed

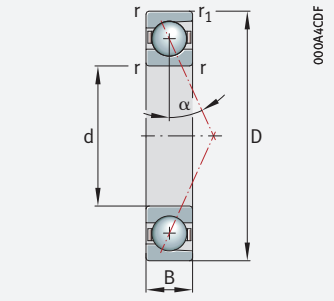

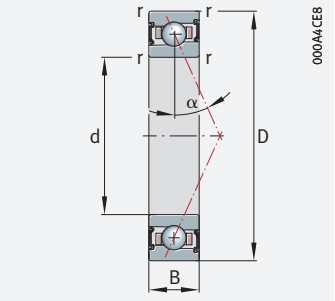

d = 15 – 15 mm

Main dimensions			Basic load ratings		Fatigue limit load	Limiting speeds[1]		Dimensions		Contact angle	Mass	Designation[2] [3]
d	D	B	dyn. C_r	stat. C_{0r}	C_{ur}	n_G grease	n_G oil[5]	r	r_1	α	m	
			kN	kN	N	min^{-1}	min^{-1}	min.	min.	°	≈ kg	
15	28	7	4,85	1,94	205	50 000	75 000	0,3	0,3	25	0,016	**B71902-E-T-P4S**
	28	7	5,1	2,03	215	56 000	85 000	0,3	0,3	15	0,016	**B71902-C-T-P4S**
	28	7	2,41	0,99	105	67 000	100 000	0,3	0,3	25	0,017	**HS71902-E-T-P4S**
	28	7	2,55	1,04	111	75 000	110 000	0,3	0,3	15	0,017	**HS71902-C-T-P4S**
	28	7	4,85	1,86	150	70 000	110 000	0,3	0,3	25	0,014	**HCB71902-E-T-P4S**
	28	7	5,1	1,94	157	75 000	120 000	0,3	0,3	15	0,014	**HCB71902-C-T-P4S**
	28	7	2,41	0,95	76	85 000	130 000	0,3	0,3	25	0,016	**HC71902-E-T-P4S**
	28	7	3,7	0,95	75	95 000	150 000	0,3	0,3	25	0,016	**XC71902-E-T-P4S**
	32	9	5,9	2,31	244	45 000	70 000	0,3	0,3	25	0,03	**B7002-E-T-P4S**
	32	9	6,1	2,41	255	53 000	80 000	0,3	0,3	15	0,03	**B7002-C-T-P4S**
	32	9	3,25	1,41	149	63 000	95 000	0,3	0,3	25	0,033	**HS7002-E-T-P4S**
	32	9	5,9	2,21	178	63 000	100 000	0,3	0,3	25	0,027	**HCB7002-E-T-P4S**
	32	9	3,45	1,48	157	70 000	110 000	0,3	0,3	15	0,033	**HS7002-C-T-P4S**
	32	9	6,2	2,31	186	70 000	110 000	0,3	0,3	15	0,027	**HCB7002-C-T-P4S**
	32	9	3,25	1,35	109	80 000	120 000	0,3	0,3	25	0,031	**HC7002-E-T-P4S**
	32	9	5	1,35	107	90 000	140 000	0,3	0,3	25	0,031	**XC7002-E-T-P4S**
	35	11	11,1	4,85	520	40 000	60 000	0,6	0,6	25	0,044	**B7202-E-T-P4S**
	35	11	11,6	5	540	45 000	67 000	0,6	0,6	15	0,044	**B7202-C-T-P4S**
	35	11	11,1	4,65	380	48 000	70 000	0,6	0,6	25	0,038	**HCB7202-E-T-P4S**
	35	11	11,6	4,8	395	56 000	85 000	0,6	0,6	15	0,038	**HCB7202-C-T-P4S**

medias *https://www.schaeffler.de/std/1F9A*

1) The limiting speeds are based on elastically preloaded single bearings.

2) Explanation of designations SP 1.

3) The bearings are also available with gap seals (type HSS, HCS, XCS or suffix 2RSD). Ordering examples: B7000-C-2RSD-T-P4S-UL and HSS7000-E-T-P4S-UL.

4) L = light preload; M = moderate preload; H = high preload.

5) Minimal quantity oil lubrication.

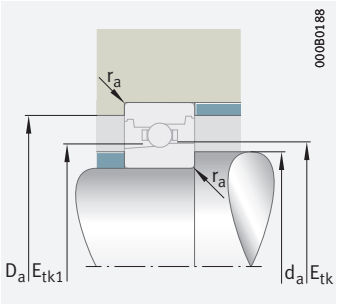

Mounting dimensions

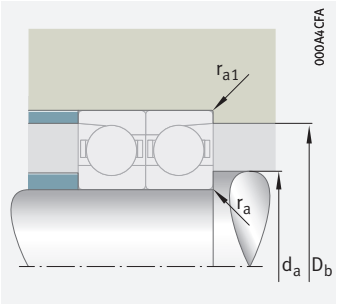

Mounting dimensions

	Mounting dimensions							Preload force[4] F_V			Lift-off force[4] K_{aE}			Axial rigidity[4] c_a		
d	d_a h12	D_a H12	r_a max.	r_{a1} max.	E_{tk} min.	E_{tk1} min.	E_{tk} E_{tk1} max.	L N	M N	H N	L N	M N	H N	L N/µm	M N/µm	H N/µm
15	18	25,5	0,3	0,1	19,9	19,9	20,9	22	111	255	64	336	805	35	64,7	91,9
	18	25,5	0,3	0,1	19,9	19,9	20,9	19	73	153	59	249	559	16,4	30,5	44,9
	18	25,5	0,3	0,1	19,9	18,8	20,4	15	46	91	44	136	278	28,3	42,4	55,6
	18	25,5	0,3	0,1	19,9	18,8	20,4	9	28	56	28	90	188	11,4	18,2	25,2
	18	25,5	0,3	0,1	19,9	19,9	20,9	12	64	150	34	190	457	31,9	58,7	82
	18	25,5	0,3	0,1	19,9	19,9	20,9	7	37	84	21	117	285	12,5	24,4	35,9
	18	25,5	0,3	0,1	19,9	18,8	20,4	11	32	63	30	92	188	28	41,5	53,9
	18	25,5	0,3	0,1	19,9	18,8	20,4	11	32	63	30	92	188	28	41,5	53,9
	19	29	0,3	0,1	21,1	21,1	22,3	36	154	341	104	464	1 066	37,2	64,6	89,8
	19	29	0,3	0,1	21,1	21,1	22,3	27	99	204	84	332	733	16,6	29,7	43
	19	29	0,3	0,1	21,6	20,4	22,4	20	61	122	59	182	372	34	50,9	66,8
	19	29	0,3	0,1	21,1	21,1	22,3	20	88	199	57	260	600	34,1	58,6	80,2
	19	29	0,3	0,1	21,6	20,4	22,4	13	38	75	38	120	251	13,7	21,8	30,2
	19	29	0,3	0,1	21,1	21,1	22,3	12	52	114	35	164	381	13,4	24,3	35,1
	19	29	0,3	0,1	21,6	20,4	22,4	14	42	85	41	124	252	33,7	49,9	64,8
	19	29	0,3	0,1	21,6	20,4	22,4	14	42	85	41	124	252	33,7	49,9	64,8
	19,5	30,5	0,6	0,3	21,7	21,7	23,4	64	252	546	187	768	1 732	49,7	84,4	117
	19,5	30,5	0,6	0,3	21,7	21,7	23,4	46	158	319	144	543	1 177	22,1	39,3	57
	19,5	30,5	0,6	0,3	21,7	21,7	23,4	24	126	291	70	371	884	39,7	72	100
	19,5	30,5	0,6	0,3	21,7	21,7	23,4	22	86	183	65	275	626	18,1	32,3	46,5

Super precision angular contact ball bearings

Steel or ceramic balls
Steel or Cronidur rings
Open or sealed

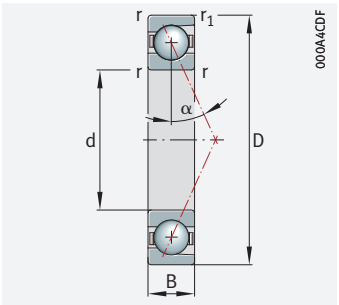

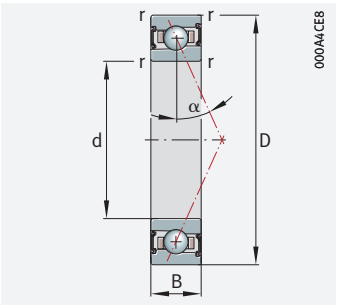

d = 17 – 20 mm

Main dimensions			Basic load ratings		Fatigue limit load	Limiting speeds[1]		Dimensions		Contact angle	Mass	Designation[2) 3)]
d	D	B	dyn. C_r	stat. C_{0r}	C_{ur}	n_G grease	n_G oil[5)]	r	r_1	α	m	
			kN	kN	N	min^{-1}	min^{-1}	min.	min.	°	≈ kg	
17	30	7	5,3	2,23	236	50 000	80 000	0,3	0,3	15	0,018	**B71903-C-T-P4S**
	30	7	5,1	2,12	225	45 000	70 000	0,3	0,3	25	0,018	**B71903-E-T-P4S**
	30	7	5,3	2,13	172	70 000	110 000	0,3	0,3	15	0,015	**HCB71903-C-T-P4S**
	30	7	5,1	2,03	164	63 000	100 000	0,3	0,3	25	0,015	**HCB71903-E-T-P4S**
	30	7	2,6	1,13	120	70 000	110 000	0,3	0,3	15	0,019	**HS71903-C-T-P4S**
	30	7	2,48	1,07	114	63 000	95 000	0,3	0,3	25	0,019	**HS71903-E-T-P4S**
	30	7	2,48	1,03	83	80 000	120 000	0,3	0,3	25	0,018	**HC71903-E-T-P4S**
	30	7	3,8	1,03	81	90 000	140 000	0,3	0,3	25	0,017	**XC71903-E-T-P4S**
	35	10	8,6	3,5	370	45 000	70 000	0,3	0,3	15	0,039	**B7003-C-T-P4S**
	35	10	8,2	3,35	355	43 000	63 000	0,3	0,3	25	0,039	**B7003-E-T-P4S**
	35	10	8,6	3,35	270	63 000	100 000	0,3	0,3	15	0,033	**HCB7003-C-T-P4S**
	35	10	8,2	3,25	260	56 000	90 000	0,3	0,3	25	0,033	**HCB7003-E-T-P4S**
	35	10	3,55	1,6	170	63 000	95 000	0,3	0,3	15	0,04	**HS7003-C-T-P4S**
	35	10	3,35	1,52	161	56 000	85 000	0,3	0,3	25	0,04	**HS7003-E-T-P4S**
	35	10	3,35	1,46	117	75 000	110 000	0,3	0,3	25	0,038	**HC7003-E-T-P4S**
	35	10	5,1	1,46	115	80 000	120 000	0,3	0,3	25	0,038	**XC7003-E-T-P4S**
	40	12	13	5,8	620	38 000	56 000	0,6	0,6	15	0,063	**B7203-C-T-P4S**
	40	12	12,4	5,6	590	36 000	53 000	0,6	0,6	25	0,062	**B7203-E-T-P4S**
	40	12	13	5,6	450	50 000	75 000	0,6	0,6	15	0,056	**HCB7203-C-T-P4S**
	40	12	12,5	5,4	435	43 000	63 000	0,6	0,6	25	0,055	**HCB7203-E-T-P4S**
20	37	9	7,4	3,2	340	43 000	63 000	0,3	0,3	15	0,037	**B71904-C-T-P4S**
	37	9	7	3,05	325	38 000	60 000	0,3	0,3	25	0,037	**B71904-E-T-P4S**
	37	9	7,4	3,1	248	60 000	90 000	0,3	0,3	15	0,033	**HCB71904-C-T-P4S**
	37	9	7	2,95	236	53 000	80 000	0,3	0,3	25	0,033	**HCB71904-E-T-P4S**

medias *https://www.schaeffler.de/std/1F9A*

1) The limiting speeds are based on elastically preloaded single bearings.

2) Explanation of designations SP 1.

3) The bearings are also available with gap seals (type HSS, HCS, XCS or suffix 2RSD). Ordering examples: B7000-C-2RSD-T-P4S-UL and HSS7000-E-T-P4S-UL.

4) L = light preload; M = moderate preload; H = high preload.

5) Minimal quantity oil lubrication.

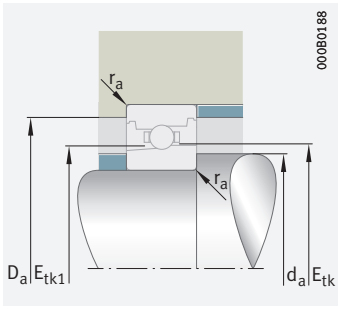

Mounting dimensions

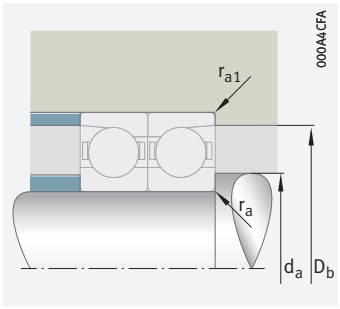

Mounting dimensions

	Mounting dimensions							Preload force[4] F_V			Lift-off force[4] K_{aE}			Axial rigidity[4] c_a		
d	d_a h12	D_a H12	r_a max.	r_{a1} max.	E_{tk} min.	E_{tk1} min.	E_{tk} E_{tk1} max.	L N	M N	H N	L N	M N	H N	L N/µm	M N/µm	H N/µm
17	20	27,5	0,3	0,1	21,4	21,4	22,3	20	78	162	62	263	592	17,5	32,6	47,9
	20	27,5	0,3	0,1	21,4	21,4	22,3	22	115	265	65	346	833	36,9	68,5	97,3
	20	27,5	0,3	0,1	21,4	21,4	22,3	8	39	89	22	123	300	13,3	26	38,3
	20	27,5	0,3	0,1	21,4	21,4	22,3	12	65	154	34	193	466	33,4	61,9	86,4
	20	27,5	0,3	0,1	21,9	20,8	22,4	10	29	58	29	93	194	12	19,2	26,5
	20	27,5	0,3	0,1	21,9	20,8	22,4	16	47	93	45	138	283	29,6	44,4	58,3
	20	27,5	0,3	0,1	21,9	20,8	22,4	11	33	66	31	96	195	29,6	43,9	56,9
	20	27,5	0,3	0,1	21,9	20,8	22,4	11	33	66	31	96	195	29,6	43,9	56,9
	21	32	0,3	0,1	23,3	23,3	24,5	40	142	291	124	474	1 042	21,1	37,1	53,6
	21	32	0,3	0,1	23,3	23,3	24,5	54	220	483	156	663	1 504	47,6	81	112
	21	32	0,3	0,1	23,3	23,3	24,5	18	75	164	54	237	546	17,3	30,7	43,9
	21	32	0,3	0,1	23,3	23,3	24,5	30	126	279	85	370	840	43,5	73,4	99,7
	21	32	0,3	0,1	24,1	22,9	24,8	13	38	76	38	121	253	14,3	22,7	31,3
	21	32	0,3	0,1	24,1	22,9	24,8	21	63	126	61	187	382	35,7	53,4	70
	21	32	0,3	0,1	24,1	22,9	24,8	14	43	86	41	126	256	35,3	52,2	67,7
	21	32	0,3	0,1	24,1	22,9	24,8	14	43	86	41	126	256	35,3	52,2	67,7
	22,5	34,5	0,6	0,3	25	25	26,7	53	179	360	165	614	1 327	23,6	41,8	60,6
	22,5	34,5	0,6	0,3	25	25	26,7	74	286	616	216	871	1 954	53,3	89,9	125
	22,5	34,5	0,6	0,3	25	25	26,7	25	97	208	75	313	708	19,5	34,4	49,5
	22,5	34,5	0,6	0,3	25	25	26,7	29	145	332	84	428	1 011	43,2	77,2	107
20	24	33,5	0,3	0,15	26	26	27,1	31	113	233	95	384	851	21,6	39,3	57,4
	24	33,5	0,3	0,15	26	26	27,1	37	170	384	108	516	1 208	46,7	83,3	117
	24	33,5	0,3	0,15	26	26	27,1	12	57	128	37	182	431	16,8	31,5	46
	24	33,5	0,3	0,15	26	26	27,1	20	98	223	58	289	678	42,5	75,3	104

Super precision angular contact ball bearings

Steel or ceramic balls
Steel or Cronidur rings
Open or sealed

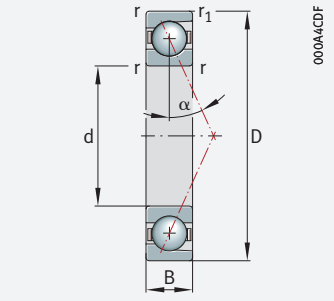

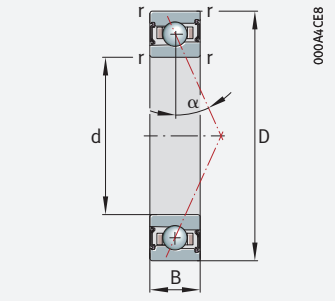

d = 20 – 25 mm

Main dimensions			Basic load ratings		Fatigue limit load	Limiting speeds[1]		Dimensions		Contact angle	Mass	Designation[2] [3]
d	D	B	dyn. C_r	stat. C_{0r}	C_{ur}	n_G grease	n_G oil[5]	r	r_1	α	m	X-life ➤ 1144
			kN	kN	N	min^{-1}	min^{-1}	min.	min.	°	≈ kg	
20	37	9	3,6	1,73	183	56 000	90 000	0,3	0,3	15	0,04	**HS71904-C-T-P4S**
	37	9	3,4	1,63	173	53 000	80 000	0,3	0,3	25	0,04	**HS71904-E-T-P4S**
	37	9	3,4	1,56	126	67 000	100 000	0,3	0,3	25	0,039	**HC71904-E-T-P4S**
	37	9	5,2	1,56	124	75 000	110 000	0,3	0,3	25	0,038	**XC71904-E-T-P4S**
	42	12	10,3	4,25	450	38 000	60 000	0,6	0,6	15	0,067	**B7004-C-T-P4S**
	42	12	9,8	4,05	430	34 000	53 000	0,6	0,6	25	0,067	**B7004-E-T-P4S**
	42	12	10,3	4,05	325	53 000	80 000	0,6	0,6	15	0,061	**HCB7004-C-T-P4S**
	42	12	9,8	3,9	315	48 000	75 000	0,6	0,6	25	0,061	**HCB7004-E-T-P4S**
	42	12	5,7	2,7	290	53 000	80 000	0,6	0,6	15	0,077	**HS7004-C-T-P4S**
	42	12	5,4	2,6	275	48 000	75 000	0,6	0,6	25	0,077	**HS7004-E-T-P4S**
	42	12	5,4	2,47	199	60 000	95 000	0,6	0,6	25	0,073	**HC7004-E-T-P4S**
	42	12	8,3	2,47	196	67 000	100 000	0,6	0,6	25	0,073	**XC7004-E-T-P4S**
	47	14	17,2	8	850	32 000	48 000	1	1	15	0,103	**B7204-C-T-P4S**
	47	14	16,5	7,7	810	30 000	45 000	1	1	25	0,103	**B7204-E-T-P4S**
	47	14	17,3	7,6	620	40 000	60 000	1	1	15	0,092	**HCB7204-C-T-P4S**
	47	14	16,5	7,3	590	36 000	53 000	1	1	25	0,091	**HCB7204-E-T-P4S**
25	42	9	8	3,8	400	36 000	56 000	0,3	0,3	15	0,043	**B71905-C-T-P4S**
	42	9	7,6	3,6	380	32 000	50 000	0,3	0,3	25	0,043	**B71905-E-T-P4S**
	42	9	8	3,65	295	50 000	75 000	0,3	0,3	15	0,039	**HCB71905-C-T-P4S**
	42	9	7,6	3,45	280	45 000	67 000	0,3	0,3	25	0,039	**HCB71905-E-T-P4S**
	42	9	3,9	2,06	218	48 000	75 000	0,3	0,3	15	0,046	**HS71905-C-T-P4S**
	42	9	3,65	1,95	206	43 000	67 000	0,3	0,3	25	0,046	**HS71905-E-T-P4S**
	42	9	3,65	1,87	150	56 000	85 000	0,3	0,3	25	0,045	**HC71905-E-T-P4S**
	42	9	6,5	2,75	295	49 300	74 700	0,3	0,15	17	0,038	**M71905-C-T-P4S-XL**
	42	9	6,3	2,65	280	46 300	68 700	0,3	0,15	25	0,038	**M71905-E-T-P4S-XL**

medias *https://www.schaeffler.de/std/1F9A*

1) The limiting speeds are based on elastically preloaded single bearings.

2) Explanation of designations SP 1.

3) The bearings are also available with gap seals (type HSS, HCS, XCS or suffix 2RSD). Ordering examples: B7000-C-2RSD-T-P4S-UL and HSS7000-E-T-P4S-UL.

4) L = light preload; M = moderate preload; H = high preload.

5) Minimal quantity oil lubrication.

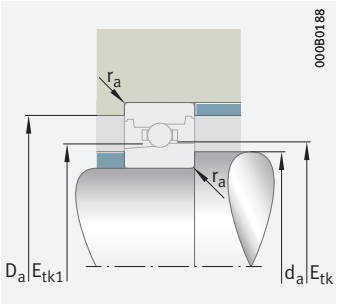

Mounting dimensions

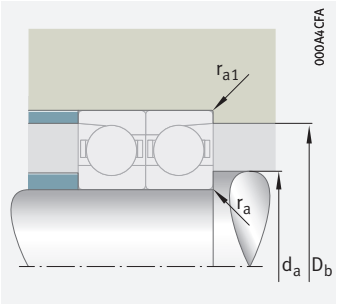

Mounting dimensions

	Mounting dimensions							Preload force[4] F_V			Lift-off force[4] K_{aE}			Axial rigidity[4] c_a		
d	d_a h12	D_a H12	r_a max.	r_{a1} max.	E_{tk} min.	E_{tk1} min.	E_{tk} E_{tk1} max.	L N	M N	H N	L N	M N	H N	L N/µm	M N/µm	H N/µm
20	24	33,5	0,3	0,15	26,6	25,4	27,2	13	39	78	39	124	259	15	23,7	32,7
	24	33,5	0,3	0,15	26,6	25,4	27,2	22	65	129	62	191	392	37,4	55,9	73,2
	24	33,5	0,3	0,15	26,6	25,4	27,2	15	44	88	42	128	261	36,9	54,6	70,7
	24	33,5	0,3	0,15	26,6	25,4	27,2	15	44	88	42	128	261	36,9	54,6	70,7
	25	37	0,6	0,3	27,8	27,8	29,3	51	175	356	157	586	1 276	22,6	39,4	56,8
	25	37	0,6	0,3	27,8	27,8	29,3	71	275	595	205	829	1 857	51,6	86,3	119
	25	37	0,6	0,3	27,8	27,8	29,3	24	94	202	72	297	673	18,7	32,7	46,6
	25	37	0,6	0,3	27,8	27,8	29,3	28	140	321	80	410	966	42	74,7	103
	25	37	0,6	0,3	28,6	27,1	29,7	21	62	125	63	198	413	19,8	31,5	43,5
	25	37	0,6	0,3	28,6	27,1	29,7	34	101	202	97	299	611	49,1	73,6	96,4
	25	37	0,6	0,3	28,6	27,1	29,7	23	70	140	67	204	415	48,8	72,3	93,7
	25	37	0,6	0,3	28,6	27,1	29,7	23	70	140	67	204	415	48,8	72,3	93,7
	26,5	40,5	1	0,3	29,6	29,6	31,7	75	248	496	234	851	1 828	28,1	49,3	71,1
	26,5	40,5	1	0,3	29,6	29,6	31,7	107	398	848	313	1 212	2 686	63,7	106	146
	26,5	40,5	1	0,3	29,6	29,6	31,7	36	135	284	109	432	967	23,3	40,5	57,9
	26,5	40,5	1	0,3	29,6	29,6	31,7	46	205	460	131	606	1 400	53	91,6	126
25	29	38,5	0,3	0,15	31	31	32	34	127	265	102	418	934	24,9	45,4	66,3
	29	38,5	0,3	0,15	31	31	32	41	191	432	115	566	1 335	54,1	97,3	137
	29	38,5	0,3	0,15	31	31	32	14	65	145	39	199	475	19,4	36,6	53,4
	29	38,5	0,3	0,15	31	31	32	22	107	246	60	310	735	48,7	87,4	121
	29	38,5	0,3	0,15	31,6	30,4	32,2	14	43	85	43	135	282	17	26,8	36,9
	29	38,5	0,3	0,15	31,6	30,4	32,2	23	69	138	66	204	416	42,2	63,1	82,4
	29	38,5	0,3	0,15	31,6	30,4	32,2	16	47	95	45	138	281	41,8	61,9	80,1
	29	38,5	0,3	0,15	31	28,9	32	29	78	163	86	235	514	24	35	48
	29	38,5	0,3	0,15	31	28,9	32	42	110	229	121	321	682	48	68	89

Super precision angular contact ball bearings

Steel or ceramic balls
Steel or Vacrodur rings
Open or sealed

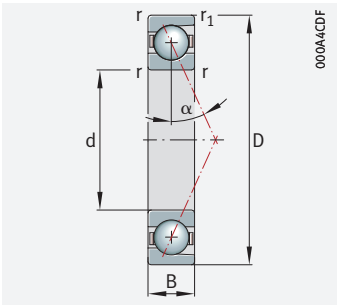

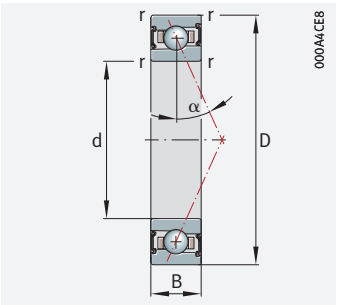

d = 25 – 30 mm

Main dimensions			Basic load ratings		Fatigue limit load	Limiting speeds[1]		Dimensions		Contact angle	Mass	Designation[2) 3)]
d	D	B	dyn. C_r	stat. C_{0r}	C_{ur}	n_G grease	n_G oil[5)]	r	r_1	α	m	X-life ➤ 1144
			kN	kN	N	min^{-1}	min^{-1}	min.	min.	°	≈ kg	
25	42	9	6,6	2,65	214	61 200	89 600	0,3	0,15	17	0,034	**HCM71905-C-T-P4S-XL**
	42	9	6,3	2,55	205	58 300	83 600	0,3	0,15	25	0,034	**HCM71905-E-T-P4S-XL**
	42	9	15,7	3,7	189	62 700	98 600	0,3	0,15	17	0,034	**VCM71905-C-T-P4S-XL**
	42	9	15,1	3,55	181	59 800	89 600	0,3	0,15	25	0,034	**VCM71905-E-T-P4S-XL**
	47	12	13,7	5,9	620	34 000	50 000	0,6	0,6	15	0,077	**B7005-C-T-P4S**
	47	12	13,1	5,6	600	30 000	45 000	0,6	0,6	25	0,077	**B7005-E-T-P4S**
	47	12	13,7	5,6	455	45 000	70 000	0,6	0,6	15	0,065	**HCB7005-C-T-P4S**
	47	12	13,1	5,4	435	40 000	63 000	0,6	0,6	25	0,065	**HCB7005-E-T-P4S**
	47	12	5,8	2,95	310	45 000	70 000	0,6	0,6	15	0,087	**HS7005-C-T-P4S**
	47	12	5,5	2,8	295	40 000	63 000	0,6	0,6	25	0,087	**HS7005-E-T-P4S**
	47	12	5,5	2,65	215	53 000	80 000	0,6	0,6	25	0,084	**HC7005-E-T-P4S**
	47	12	8	3,25	345	45 900	69 500	0,6	0,3	17	0,076	**M7005-C-T-P4S-XL**
	47	12	7,7	3,15	330	43 100	63 900	0,6	0,3	25	0,076	**M7005-E-T-P4S-XL**
	47	12	8	3,15	250	57 000	83 400	0,6	0,3	17	0,069	**HCM7005-C-T-P4S-XL**
	47	12	7,7	3	242	54 200	77 800	0,6	0,3	25	0,069	**HCM7005-E-T-P4S-XL**
	47	12	19,2	4,4	223	58 400	91 700	0,6	0,3	17	0,069	**VCM7005-C-T-P4S-XL**
	47	12	18,4	4,2	214	55 600	83 400	0,6	0,3	25	0,069	**VCM7005-E-T-P4S-XL**
	52	15	14,8	6,1	650	28 000	43 000	1	1	15	0,127	**B7205-C-T-P4S**
	52	15	14,2	5,8	620	26 000	40 000	1	1	25	0,127	**B7205-E-T-P4S**
	52	15	14,8	5,8	470	36 000	53 000	1	1	15	0,114	**HCB7205-C-T-P4S**
	52	15	14,2	5,6	450	32 000	48 000	1	1	25	0,114	**HCB7205-E-T-P4S**
30	47	9	8,5	4,35	460	30 000	48 000	0,3	0,3	15	0,05	**B71906-C-T-P4S**
	47	9	8,1	4,15	440	28 000	43 000	0,3	0,3	25	0,05	**B71906-E-T-P4S**
	47	9	8,5	4,2	335	43 000	67 000	0,3	0,3	15	0,045	**HCB71906-C-T-P4S**
	47	9	8,1	3,95	320	38 000	60 000	0,3	0,3	25	0,045	**HCB71906-E-T-P4S**

medias *https://www.schaeffler.de/std/1F9A*

1) The limiting speeds are based on elastically preloaded single bearings.

2) Explanation of designations SP 1.

3) The bearings are also available with gap seals (type HSS, HCS, XCS or suffix 2RSD). Ordering examples: B7000-C-2RSD-T-P4S-UL and HSS7000-E-T-P4S-UL.

4) L = light preload; M = moderate preload; H = high preload.

5) Minimal quantity oil lubrication.

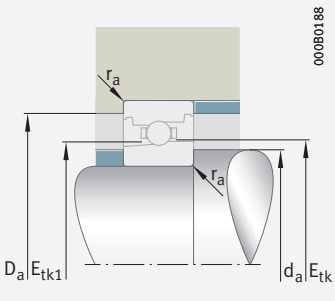

Mounting dimensions

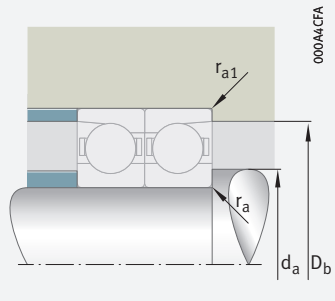

Mounting dimensions

	Mounting dimensions							Preload force[4] F_V			Lift-off force[4] K_{aE}			Axial rigidity[4] c_a		
d	d_a h12	D_a H12	r_a max.	r_{a1} max.	E_{tk} min.	E_{tk1} min.	E_{tk} E_{tk1} max.	L N	M N	H N	L N	M N	H N	L N/µm	M N/µm	H N/µm
25	29	38,5	0,3	0,15	31	28,9	32	21	54	114	60	161	348	24	34	45
	29	38,5	0,3	0,15	31	28,9	32	30	77	161	85	224	472	48	67	88
	29	38,5	0,3	0,15	31	28,9	32	18	49	102	54	144	310	23	33	45
	29	38,5	0,3	0,15	31	28,9	32	27	70	145	76	201	422	48	67	87
	30	42	0,6	0,3	32,5	32,5	34,1	73	248	502	226	831	1 807	29,6	51,2	73,5
	30	42	0,6	0,3	32,5	32,5	34,1	99	381	820	290	1 150	2 560	67,2	112	153
	30	42	0,6	0,3	32,5	32,5	34,1	35	132	283	104	419	944	24,6	42,5	60,2
	30	42	0,6	0,3	32,5	32,5	34,1	40	194	443	117	573	1 338	55,4	96,9	133
	30	42	0,6	0,3	33,6	32,2	34,5	21	63	127	64	201	419	20,6	32,7	45
	30	42	0,6	0,3	33,6	32,2	34,5	35	104	207	100	306	626	51,2	76,7	100
	30	42	0,6	0,3	33,6	32,2	34,5	23	70	140	67	204	415	50,4	74,7	96,7
	30	42	0,6	0,3	32,7	30,6	34,4	34	91	191	101	275	601	24	35	48
	30	42	0,6	0,3	32,7	30,6	34,4	49	130	270	142	378	802	49	69	91
	30	42	0,6	0,3	32,7	30,6	34,4	24	64	133	70	189	407	24	34	46
	30	42	0,6	0,3	32,7	30,6	34,4	35	91	190	100	264	555	49	69	90
	30	42	0,6	0,3	32,7	30,6	34,4	22	57	119	63	169	362	24	34	46
	30	42	0,6	0,3	32,7	30,6	34,4	31	82	170	90	236	497	49	68	89
	31,5	45,5	1	0,3	34,4	34,4	36,5	81	269	542	248	906	1 949	30,4	53,4	77
	31,5	45,5	1	0,3	34,4	34,4	36,5	116	429	914	333	1 293	2 868	69,2	115	159
	31,5	45,5	1	0,3	34,4	34,4	36,5	40	147	311	117	465	1 042	25,3	44,1	63,1
	31,5	45,5	1	0,3	34,4	34,4	36,5	50	223	500	140	650	1 504	57,6	99,8	137
30	34	43,5	0,3	0,15	36	36	37	36	134	281	106	439	985	27	49,3	72,1
	34	43,5	0,3	0,15	36	36	37	41	197	448	114	580	1 377	58	105	148
	34	43,5	0,3	0,15	36	36	37	14	68	155	40	210	504	21,1	40	58,3
	34	43,5	0,3	0,15	36	36	37	22	112	258	60	322	768	52,5	95,1	132

Super precision angular contact ball bearings

Steel or ceramic balls
Steel or Vacrodur rings
Open or sealed

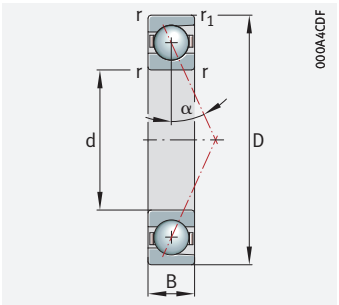

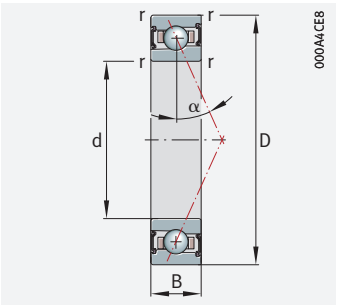

d = 30 – 30 mm

Main dimensions			Basic load ratings		Fatigue limit load	Limiting speeds[1]		Dimensions		Contact angle	Mass	Designation[2) 3)]
d	D	B	dyn. C_r	stat. C_{0r}	C_{ur}	n_G grease	n_G oil[5)]	r	r_1	α	m	X-life ➤ 1144
			kN	kN	N	min^{-1}	min^{-1}	min.	min.	°	≈ kg	
30	47	9	5,9	3,1	330	43 000	63 000	0,3	0,3	15	0,05	**HS71906-C-T-P4S**
	47	9	5,6	2,95	315	38 000	60 000	0,3	0,3	25	0,05	**HS71906-E-T-P4S**
	47	9	5,6	2,85	228	48 000	75 000	0,3	0,3	25	0,046	**HC71906-E-T-P4S**
	47	9	6,9	3,2	335	42 900	65 000	0,3	0,15	17	0,044	**M71906-C-T-P4S-XL**
	47	9	6,6	3,05	320	40 300	59 800	0,3	0,15	25	0,044	**M71906-E-T-P4S-XL**
	47	9	6,9	3,05	245	53 300	78 000	0,3	0,15	17	0,039	**HCM71906-C-T-P4S-XL**
	47	9	6,6	2,9	235	50 700	72 800	0,3	0,15	25	0,039	**HCM71906-E-T-P4S-XL**
	47	9	16,7	4,25	217	54 600	85 800	0,3	0,15	17	0,039	**VCM71906-C-T-P4S-XL**
	47	9	15,9	4,1	208	52 000	78 000	0,3	0,15	25	0,039	**VCM71906-E-T-P4S-XL**
	55	13	14,4	6,7	710	28 000	43 000	1	1	15	0,114	**B7006-C-T-P4S**
	55	13	13,7	6,4	670	24 000	38 000	1	1	25	0,114	**B7006-E-T-P4S**
	55	13	14,4	6,4	520	38 000	60 000	1	1	15	0,101	**HCB7006-C-T-P4S**
	55	13	13,7	6,1	490	34 000	53 000	1	1	25	0,101	**HCB7006-E-T-P4S**
	55	13	8,2	4,25	450	38 000	56 000	1	1	15	0,124	**HS7006-C-T-P4S**
	55	13	7,8	4,05	425	34 000	53 000	1	1	25	0,124	**HS7006-E-T-P4S**
	55	13	7,8	3,85	310	43 000	67 000	1	1	25	0,119	**HC7006-E-T-P4S**
	55	13	8,9	4,05	430	38 900	58 900	1	0,6	17	0,12	**M7006-C-T-P4S-XL**
	55	13	8,5	3,9	410	36 500	54 200	1	0,6	25	0,12	**M7006-E-T-P4S-XL**
	55	13	8,9	3,9	315	48 300	70 600	1	0,6	17	0,11	**HCM7006-C-T-P4S-XL**
	55	13	8,5	3,7	300	45 900	65 900	1	0,6	25	0,11	**HCM7006-E-T-P4S-XL**
	55	13	21,4	5,4	275	49 500	77 700	1	0,6	17	0,11	**VCM7006-C-T-P4S-XL**
	55	13	20,4	5,2	265	47 100	70 600	1	0,6	25	0,11	**VCM7006-E-T-P4S-XL**
	62	16	23,1	10,4	1 100	24 000	38 000	1	1	15	0,197	**B7206-C-T-P4S**
	62	16	22,1	9,9	1 050	22 000	36 000	1	1	25	0,197	**B7206-E-T-P4S**
	62	16	23,1	9,9	800	30 000	45 000	1	1	15	0,172	**HCB7206-C-T-P4S**
	62	16	22,2	9,5	770	26 000	40 000	1	1	25	0,172	**HCB7206-E-T-P4S**

medias *https://www.schaeffler.de/std/1F9A*

1) The limiting speeds are based on elastically preloaded single bearings.

2) Explanation of designations SP 1.

3) The bearings are also available with gap seals (type HSS, HCS, XCS or suffix 2RSD). Ordering examples: B7000-C-2RSD-T-P4S-UL and HSS7000-E-T-P4S-UL.

4) L = light preload; M = moderate preload; H = high preload.

5) Minimal quantity oil lubrication.

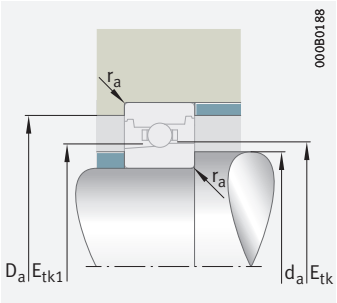

Mounting dimensions

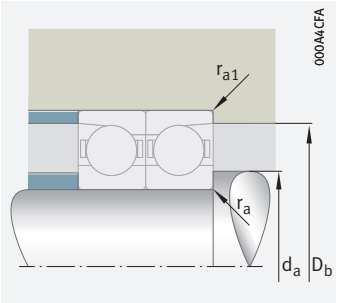

Mounting dimensions

	Mounting dimensions							Preload force[4] F_V			Lift-off force[4] K_{aE}			Axial rigidity[4] c_a		
d	d_a h12	D_a H12	r_a max.	r_{a1} max.	E_{tk} min.	E_{tk1} min.	E_{tk} E_{tk1} max.	L N	M N	H N	L N	M N	H N	L N/µm	M N/µm	H N/µm
30	34	43,5	0,3	0,15	36,1	34,7	37	21	64	129	65	204	425	21,3	33,8	46,5
	34	43,5	0,3	0,15	36,1	34,7	37	35	104	207	100	306	625	52,9	79,1	103
	34	43,5	0,3	0,15	36,1	34,7	37	24	72	143	69	209	425	52,5	77,7	101
	34	43,5	0,3	0,15	35,7	33,9	37	34	89	188	99	270	592	27	39	54
	34	43,5	0,3	0,15	35,7	33,9	37	48	126	263	138	368	782	54	76	100
	34	43,5	0,3	0,15	35,7	33,9	37	24	62	131	69	186	400	27	38	51
	34	43,5	0,3	0,15	35,7	33,9	37	34	89	185	97	257	541	54	76	99
	34	43,5	0,3	0,15	35,7	33,9	37	21	56	117	62	166	356	26	38	51
	34	43,5	0,3	0,15	35,7	33,9	37	30	80	166	87	230	484	54	75	98
	36	49	1	0,3	39,4	39,4	40,6	74	254	516	228	848	1 844	32,4	56,7	81,8
	36	49	1	0,3	39,4	39,4	40,6	102	396	854	294	1 188	2 661	73,5	123	170
	36	49	1	0,3	39,4	39,4	40,6	35	137	293	104	431	976	26,9	47	67,1
	36	49	1	0,3	39,4	39,4	40,6	42	203	465	117	592	1 395	60,1	107	147
	36	49	1	0,3	39,7	37,9	40,9	29	88	177	89	280	584	24,4	38,7	53,2
	36	49	1	0,3	39,7	37,9	40,9	48	143	286	138	423	865	60,6	90,6	119
	36	49	1	0,3	39,7	37,9	40,9	33	98	197	94	287	583	60	88,8	115
	36	49	1	0,3	39,2	37,1	40,9	43	113	238	125	342	749	29	43	59
	36	49	1	0,3	39,2	37,1	40,9	61	161	335	176	469	995	59	84	110
	36	49	1	0,3	39,2	37,1	40,9	30	79	166	87	235	507	29	42	56
	36	49	1	0,3	39,2	37,1	40,9	43	113	235	124	327	689	59	83	109
	36	49	1	0,3	39,2	37,1	40,9	27	71	148	78	210	450	29	41	55
	36	49	1	0,3	39,2	37,1	40,9	39	102	211	111	293	616	59	83	108
	37,5	54,5	1	0,3	41,2	41,2	43,7	123	404	806	385	1 375	2 945	39,6	68,8	98,9
	37,5	54,5	1	0,3	41,2	41,2	43,7	177	641	1 355	518	1 946	4 271	90,4	148	203
	37,5	54,5	1	0,3	41,2	41,2	43,7	62	222	465	185	711	1 576	33,3	57,1	81,1
	37,5	54,5	1	0,3	41,2	41,2	43,7	80	339	749	231	1 001	2 273	76,8	130	177

Super precision angular contact ball bearings

Steel or ceramic balls
Steel or Vacrodur rings
Open or sealed

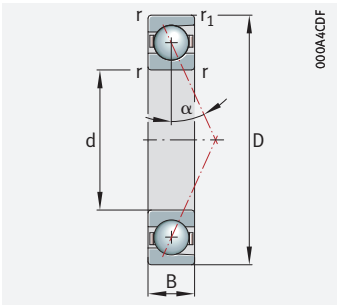

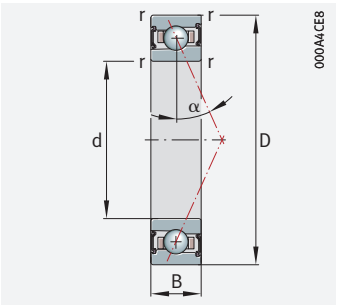

d = 35 – 35 mm

Main dimensions			Basic load ratings		Fatigue limit load	Limiting speeds[1]		Dimensions		Contact angle	Mass	Designation[2] [3]
d	D	B	dyn. C_r	stat. C_{0r}	C_{ur}	n_G grease	n_G oil[5]	r	r_1	α	m	X-life ➤ *1144*
			kN	kN	N	min^{-1}	min^{-1}	min.	min.	°	≈ kg	
35	55	10	12,1	6,8	720	26 000	40 000	0,6	0,6	15	0,077	**B71907-C-T-P4S**
	55	10	11,5	6,5	680	24 000	36 000	0,6	0,6	25	0,077	**B71907-E-T-P4S**
	55	10	12,1	6,5	530	36 000	56 000	0,6	0,6	15	0,067	**HCB71907-C-T-P4S**
	55	10	11,5	6,2	500	32 000	50 000	0,6	0,6	25	0,067	**HCB71907-E-T-P4S**
	55	10	6,4	3,8	400	36 000	56 000	0,6	0,6	15	0,081	**HS71907-C-T-P4S**
	55	10	6,1	3,6	380	32 000	50 000	0,6	0,6	25	0,081	**HS71907-E-T-P4S**
	55	10	6,1	3,45	275	40 000	63 000	0,6	0,6	25	0,076	**HC71907-E-T-P4S**
	55	10	9,5	4,55	480	36 700	55 600	0,6	0,3	17	0,069	**M71907-C-T-P4S-XL**
	55	10	9	4,35	460	34 500	51 200	0,6	0,3	25	0,069	**M71907-E-T-P4S-XL**
	55	10	9,5	4,35	350	45 600	66 700	0,6	0,3	17	0,061	**HCM71907-C-T-P4S-XL**
	55	10	9,1	4,15	335	43 400	62 300	0,6	0,3	25	0,061	**HCM71907-E-T-P4S-XL**
	55	10	22,7	6,1	310	46 700	73 400	0,6	0,3	17	0,061	**VCM71907-C-T-P4S-XL**
	55	10	21,7	5,8	300	44 500	66 700	0,6	0,3	25	0,061	**VCM71907-E-T-P4S-XL**
	62	14	19,3	9,6	1 020	24 000	38 000	1	1	15	0,154	**B7007-C-T-P4S**
	62	14	18,4	9,2	970	22 000	34 000	1	1	25	0,154	**B7007-E-T-P4S**
	62	14	19,4	9,2	740	34 000	53 000	1	1	15	0,135	**HCB7007-C-T-P4S**
	62	14	18,5	8,8	710	30 000	45 000	1	1	25	0,135	**HCB7007-E-T-P4S**
	62	14	8,9	5	530	34 000	50 000	1	1	15	0,169	**HS7007-C-T-P4S**
	62	14	8,4	4,7	500	30 000	45 000	1	1	25	0,169	**HS7007-E-T-P4S**
	62	14	8,4	4,5	365	38 000	60 000	1	1	25	0,163	**HC7007-E-T-P4S**
	62	14	11,3	5,3	560	34 100	51 600	1	0,6	17	0,15	**M7007-C-T-P4S-XL**
	62	14	10,8	5	530	32 000	47 500	1	0,6	25	0,15	**M7007-E-T-P4S-XL**
	62	14	11,3	5	405	42 300	61 900	1	0,6	17	0,14	**HCM7007-C-T-P4S-XL**
	62	14	10,8	4,85	390	40 300	57 800	1	0,6	25	0,14	**HCM7007-E-T-P4S-XL**
	62	14	27	7,1	360	43 300	68 100	1	0,6	17	0,14	**VCM7007-C-T-P4S-XL**
	62	14	26	6,8	345	41 300	61 900	1	0,6	25	0,14	**VCM7007-E-T-P4S-XL**

medias *https://www.schaeffler.de/std/1F9A*

1) The limiting speeds are based on elastically preloaded single bearings.

2) Explanation of designations SP 1.

3) The bearings are also available with gap seals (type HSS, HCS, XCS or suffix 2RSD). Ordering examples: B7000-C-2RSD-T-P4S-UL and HSS7000-E-T-P4S-UL.

4) L = light preload; M = moderate preload; H = high preload.

5) Minimal quantity oil lubrication.

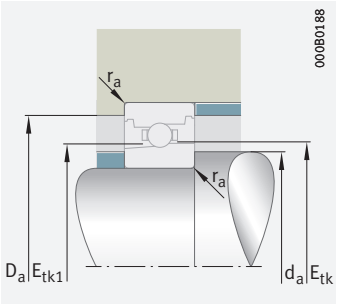

Mounting dimensions

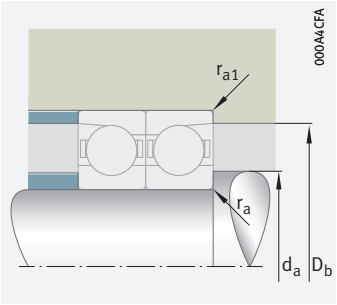

Mounting dimensions

d	Mounting dimensions							Preload force[4] F_V			Lift-off force[4] K_{aE}			Axial rigidity[4] c_a		
	d_a h12	D_a H12	r_a max.	r_{a1} max.	E_{tk} min.	E_{tk1} min.	E_{tk} E_{tk1} max.	L N	M N	H N	L N	M N	H N	L N/µm	M N/µm	H N/µm
35	40	51,5	0,6	0,15	42,6	42,6	44	50	185	384	155	619	1 377	33,5	60,2	87,5
	40	51,5	0,6	0,15	42,6	42,6	44	60	273	613	174	820	1 910	72,9	129	179
	40	51,5	0,6	0,15	42,6	42,6	44	21	96	213	63	301	709	26,7	49,1	71
	40	51,5	0,6	0,15	42,6	42,6	44	33	158	359	95	463	1 081	66,7	117	161
	40	51,5	0,6	0,15	42,6	41,2	43,4	23	70	140	70	220	459	24,5	38,6	53
	40	51,5	0,6	0,15	42,6	41,2	43,4	38	113	226	109	333	680	61	91,1	119
	40	51,5	0,6	0,15	42,6	41,2	43,4	26	78	155	74	226	459	60,5	89,4	116
	40	51,5	0,6	0,15	41,7	39,6	43,3	48	127	267	141	384	841	33	48	66
	40	51,5	0,6	0,15	41,7	39,6	43,3	69	180	376	198	526	1 117	66	93	123
	40	51,5	0,6	0,15	41,7	39,6	43,3	34	89	186	98	264	569	33	47	63
	40	51,5	0,6	0,15	41,7	39,6	43,3	48	127	264	139	367	773	66	93	121
	40	51,5	0,6	0,15	41,7	39,6	43,3	30	79	166	88	235	506	32	46	62
	40	51,5	0,6	0,15	41,7	39,6	43,3	44	114	237	125	329	692	66	92	120
	41	56	1	0,3	44,5	44,5	46,3	95	321	649	296	1 087	2 357	38,3	66,6	95,8
	41	56	1	0,3	44,5	44,5	46,3	134	511	1 097	394	1 551	3 446	87,9	146	200
	41	56	1	0,3	44,5	44,5	46,3	46	175	372	138	558	1 255	32	55,5	78,9
	41	56	1	0,3	44,5	44,5	46,3	54	257	585	157	761	1 771	72,1	126	173
	41	56	1	0,3	45,7	43,9	46,8	31	93	187	94	295	614	27,1	42,8	58,8
	41	56	1	0,3	45,7	43,9	46,8	51	152	304	146	448	915	67,7	101	132
	41	56	1	0,3	45,7	43,9	46,8	35	105	210	101	307	623	67,3	99,5	129
	41	56	1	0,3	44,7	42,3	46,6	56	148	311	164	448	979	34	49	67
	41	56	1	0,3	44,7	42,3	46,6	80	210	438	230	613	1 302	68	96	126
	41	56	1	0,3	44,7	42,3	46,6	39	103	217	114	307	663	33	48	64
	41	56	1	0,3	44,7	42,3	46,6	57	148	308	162	428	901	68	95	124
	41	56	1	0,3	44,7	42,3	46,6	35	93	194	102	274	589	33	47	63
	41	56	1	0,3	44,7	42,3	46,6	51	133	276	145	383	806	68	95	123

Super precision angular contact ball bearings

Steel or ceramic balls
Steel or Vacrodur rings
Open or sealed

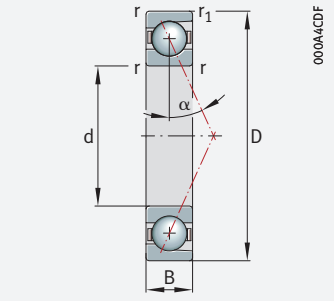

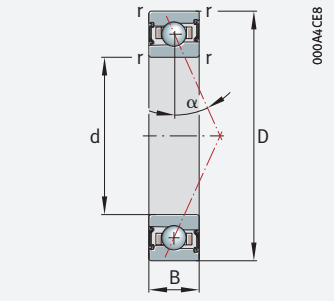

d = 35 – 40 mm

Main dimensions			Basic load ratings		Fatigue limit load	Limiting speeds[1]		Dimensions		Contact angle	Mass	Designation[2] [3]
d	D	B	dyn. C_r	stat. C_{0r}	C_{ur}	n_G grease	n_G oil[5]	r	r_1	α	m	X-life ➤ *1144*
			kN	kN	N	min^{-1}	min^{-1}	min.	min.	°	≈ kg	
35	72	17	25,5	12,6	1 340	20 000	34 000	1,1	1,1	15	0,301	**B7207-C-T-P4S**
	72	17	24,5	12,1	1 280	19 000	32 000	1,1	1,1	25	0,3	**B7207-E-T-P4S**
	72	17	25,5	12,1	980	26 000	40 000	1,1	1,1	15	0,265	**HCB7207-C-T-P4S**
	72	17	24,6	11,6	930	22 000	36 000	1,1	1,1	25	0,264	**HCB7207-E-T-P4S**
40	62	12	18	9,9	1 040	24 000	36 000	0,6	0,6	15	0,109	**B71908-C-T-P4S**
	62	12	17,1	9,4	990	20 000	32 000	0,6	0,6	25	0,109	**B71908-E-T-P4S**
	62	12	18,1	9,4	760	32 000	50 000	0,6	0,6	15	0,092	**HCB71908-C-T-P4S**
	62	12	17,2	9	720	28 000	45 000	0,6	0,6	25	0,092	**HCB71908-E-T-P4S**
	62	12	6,8	4,3	455	32 000	48 000	0,6	0,6	15	0,125	**HS71908-C-T-P4S**
	62	12	6,4	4,05	430	28 000	43 000	0,6	0,6	25	0,125	**HS71908-E-T-P4S**
	62	12	6,4	3,9	315	36 000	56 000	0,6	0,6	25	0,119	**HC71908-E-T-P4S**
	62	12	11,6	5,6	600	32 400	49 100	0,6	0,3	17	0,1	**M71908-C-T-P4S-XL**
	62	12	11,1	5,4	570	30 400	45 100	0,6	0,3	25	0,1	**M71908-E-T-P4S-XL**
	62	12	11,6	5,4	435	40 200	58 900	0,6	0,3	17	0,089	**HCM71908-C-T-P4S-XL**
	62	12	11,1	5,1	415	38 300	55 000	0,6	0,3	25	0,089	**HCM71908-E-T-P4S-XL**
	62	12	28	7,5	385	41 200	64 800	0,6	0,3	17	0,089	**VCM71908-C-T-P4S-XL**
	62	12	26,5	7,2	365	39 300	58 900	0,6	0,3	25	0,089	**VCM71908-E-T-P4S-XL**
	68	15	20,9	11,2	1 180	22 000	34 000	1	1	15	0,189	**B7008-C-T-P4S**
	68	15	19,9	10,6	1 130	20 000	30 000	1	1	25	0,189	**B7008-E-T-P4S**
	68	15	20,9	10,7	860	30 000	45 000	1	1	15	0,166	**HCB7008-C-T-P4S**
	68	15	19,9	10,2	820	28 000	43 000	1	1	25	0,166	**HCB7008-E-T-P4S**
	68	15	9,4	5,7	610	30 000	45 000	1	1	15	0,211	**HS7008-C-T-P4S**
	68	15	8,9	5,4	570	26 000	40 000	1	1	25	0,211	**HS7008-E-T-P4S**
	68	15	8,9	5,2	415	34 000	53 000	1	1	25	0,204	**HC7008-E-T-P4S**
	68	15	11,9	6	630	30 600	46 300	1	0,6	17	0,19	**M7008-C-T-P4S-XL**
	68	15	11,4	5,7	600	28 800	42 600	1	0,6	25	0,19	**M7008-E-T-P4S-XL**

medias *https://www.schaeffler.de/std/1F9A*

[1] The limiting speeds are based on elastically preloaded single bearings.

[2] Explanation of designations SP 1.

[3] The bearings are also available with gap seals (type HSS, HCS, XCS or suffix 2RSD). Ordering examples: B7000-C-2RSD-T-P4S-UL and HSS7000-E-T-P4S-UL.

[4] L = light preload; M = moderate preload; H = high preload.

[5] Minimal quantity oil lubrication.

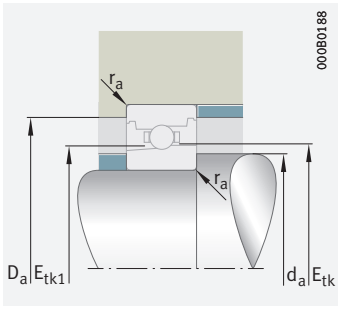

Mounting dimensions

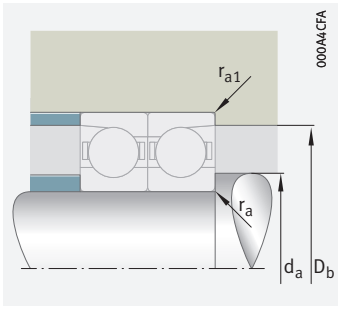

Mounting dimensions

d	Mounting dimensions							Preload force[4] F_V			Lift-off force[4] K_{aE}			Axial rigidity[4] c_a		
	d_a h12	D_a H12	r_a max.	r_{a1} max.	E_{tk} min.	E_{tk1} min.	E_{tk} E_{tk1} max.	L N	M N	H N	L N	M N	H N	L N/µm	M N/µm	H N/µm
35	44	63	1	0,3	47,8	47,8	51	134	443	887	418	1 500	3 223	44,8	77,8	112
	44	63	1	0,3	47,8	47,8	51	195	710	1 504	570	2 152	4 730	103	169	232
	44	63	1	0,3	47,8	47,8	51	67	243	510	200	774	1 720	37,7	64,7	91,8
	44	63	1	0,3	47,8	47,8	51	84	363	806	242	1 069	2 438	86,2	146	200
40	45	58,5	0,6	0,15	47,3	47,3	49,1	84	292	594	259	979	2 140	40,7	71,6	103
	45	58,5	0,6	0,15	47,3	47,3	49,1	111	447	974	324	1 348	3 043	91,3	155	213
	45	58,5	0,6	0,15	47,3	47,3	49,1	39	156	337	116	494	1 127	33,5	59,2	84,7
	45	58,5	0,6	0,15	47,3	47,3	49,1	41	220	514	117	645	1 548	72,4	132	183
	45	58,5	0,6	0,15	48,6	47,2	49,3	24	72	145	72	227	473	26,6	41,8	57,2
	45	58,5	0,6	0,15	48,6	47,2	49,3	39	117	235	113	345	704	66,6	99,2	129
	45	58,5	0,6	0,15	48,6	47,2	49,3	27	82	164	78	238	484	66,4	98	127
	45	58,5	0,6	0,15	47,2	44,8	49,1	59	157	331	174	477	1 044	36	52	71
	45	58,5	0,6	0,15	47,2	44,8	49,1	85	224	466	245	653	1 386	72	101	134
	45	58,5	0,6	0,15	47,2	44,8	49,1	42	110	231	121	327	706	35	51	68
	45	58,5	0,6	0,15	47,2	44,8	49,1	60	157	327	172	456	960	72	101	132
	45	58,5	0,6	0,15	47,2	44,8	49,1	37	99	207	109	292	628	35	50	67
	45	58,5	0,6	0,15	47,2	44,8	49,1	54	141	294	155	408	858	72	100	131
	46	62	1	0,3	49,3	49,3	51,8	101	344	698	312	1 157	2 515	43,2	75,6	109
	46	62	1	0,3	49,3	49,3	51,8	141	543	1 170	410	1 640	3 663	98,6	165	227
	46	62	1	0,3	49,3	49,3	51,8	49	188	402	146	597	1 350	36,1	63,1	89,9
	46	62	1	0,3	49,3	49,3	51,8	55	271	622	159	797	1 875	80	142	195
	46	62	1	0,3	51,2	49,4	52,3	34	101	201	100	316	659	30,1	47,4	64,9
	46	62	1	0,3	51,2	49,4	52,3	53	160	321	154	472	964	74,7	111	145
	46	62	1	0,3	51,2	49,4	52,3	37	110	221	106	321	652	74,2	110	142
	46	62	1	0,6	50,2	47,8	52,1	63	167	352	185	507	1 110	38	55	76
	46	62	1	0,3	50,2	47,8	52,1	91	238	495	261	694	1 473	76	107	141

Super precision angular contact ball bearings

Steel or ceramic balls
Steel or Vacrodur rings
Open or sealed

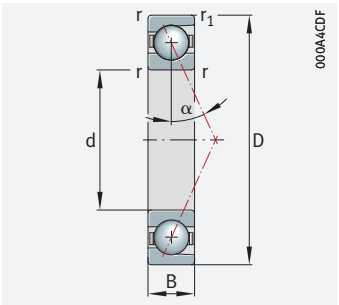

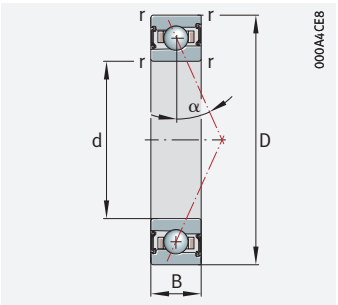

d = 40 – 45 mm

Main dimensions			Basic load ratings		Fatigue limit load	Limiting speeds[1]		Dimensions		Contact angle	Mass	Designation[2] [3]
d	D	B	dyn. C_r	stat. C_{0r}	C_{ur}	n_G grease	n_G oil[5]	r	r_1	α	m	X-life ➤ 1144
			kN	kN	N	min^{-1}	min^{-1}	min.	min.	°	≈ kg	
40	68	15	11,9	5,7	460	38 000	55 600	1	0,6	17	0,18	**HCM7008-C-T-P4S-XL**
	68	15	11,4	5,5	440	36 200	51 900	1	0,6	25	0,18	**HCM7008-E-T-P4S-XL**
	68	15	28,5	8	410	38 900	61 200	1	0,6	17	0,18	**VCM7008-C-T-P4S-XL**
	68	15	27,5	7,7	390	37 100	55 600	1	0,6	25	0,18	**VCM7008-E-T-P4S-XL**
	80	18	32,5	16,1	1 700	18 000	30 000	1,1	1,1	15	0,372	**B7208-C-T-P4S**
	80	18	31	15,4	1 630	17 000	28 000	1,1	1,1	25	0,371	**B7208-E-T-P4S**
	80	18	32,5	15,4	1 240	24 000	38 000	1,1	1,1	15	0,322	**HCB7208-C-T-P4S**
	80	18	31	14,7	1 190	20 000	34 000	1,1	1,1	25	0,321	**HCB7208-E-T-P4S**
45	68	12	19,1	11,2	1 180	20 000	32 000	0,6	0,6	15	0,127	**B71909-C-T-P4S**
	68	12	18,2	10,6	1 120	19 000	28 000	0,6	0,6	25	0,127	**B71909-E-T-P4S**
	68	12	19,2	10,7	860	28 000	45 000	0,6	0,6	15	0,108	**HCB71909-C-T-P4S**
	68	12	18,2	10,2	820	26 000	40 000	0,6	0,6	25	0,108	**HCB71909-E-T-P4S**
	68	12	9,6	6	630	28 000	43 000	0,6	0,6	15	0,136	**HS71909-C-T-P4S**
	68	12	9,1	5,6	600	26 000	40 000	0,6	0,6	25	0,136	**HS71909-E-T-P4S**
	68	12	9,1	5,4	435	32 000	50 000	0,6	0,6	25	0,129	**HC71909-E-T-P4S**
	68	12	12,2	6,3	670	29 300	44 300	0,6	0,3	17	0,12	**M71909-C-T-P4S-XL**
	68	12	11,7	6	640	27 500	40 800	0,6	0,3	25	0,12	**M71909-E-T-P4S-XL**
	68	12	12,3	6	485	36 300	53 100	0,6	0,3	17	0,11	**HCM71909-C-T-P4S-XL**
	68	12	11,7	5,8	465	34 600	49 600	0,6	0,3	25	0,11	**HCM71909-E-T-P4S-XL**
	68	12	29,5	8,5	430	37 200	58 500	0,6	0,3	17	0,11	**VCM71909-C-T-P4S-XL**
	68	12	28	8,1	415	35 400	53 100	0,6	0,3	25	0,11	**VCM71909-E-T-P4S-XL**
	75	16	28	14,9	1 580	19 000	30 000	1	1	15	0,232	**B7009-C-T-P4S**
	75	16	26,5	14,2	1 500	17 000	26 000	1	1	25	0,232	**B7009-E-T-P4S**
	75	16	28	14,3	1 150	26 000	40 000	1	1	15	0,191	**HCB7009-C-T-P4S**
	75	16	26,5	13,6	1 090	24 000	38 000	1	1	25	0,191	**HCB7009-E-T-P4S**

medias *https://www.schaeffler.de/std/1F9A*

1) The limiting speeds are based on elastically preloaded single bearings.

2) Explanation of designations SP 1.

3) The bearings are also available with gap seals (type HSS, HCS, XCS or suffix 2RSD). Ordering examples: B7000-C-2RSD-T-P4S-UL and HSS7000-E-T-P4S-UL.

4) L = light preload; M = moderate preload; H = high preload.

5) Minimal quantity oil lubrication.

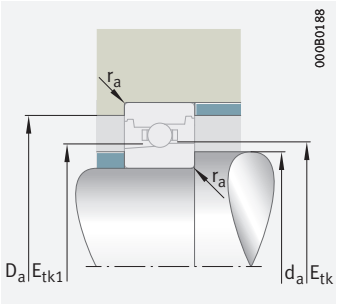

Mounting dimensions

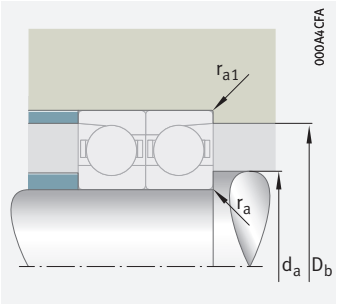

Mounting dimensions

	Mounting dimensions							Preload force[4] F_V			Lift-off force[4] K_{aE}			Axial rigidity[4] c_a		
d	d_a h12	D_a H12	r_a max.	r_{a1} max.	E_{tk} min.	E_{tk1} min.	E_{tk} E_{tk1} max.	L N	M N	H N	L N	M N	H N	L N/µm	M N/µm	H N/µm
40	46	62	1	0,3	50,2	47,8	52,1	44	117	245	129	348	751	37	54	72
	46	62	1	0,3	50,2	47,8	52,1	64	167	348	183	484	1 020	76	107	139
	46	62	1	0,3	50,2	47,8	52,1	40	105	220	116	311	668	37	53	71
	46	62	1	0,3	50,2	47,8	52,1	57	150	312	164	434	912	76	106	138
	48	72	1	0,6	53,4	53,4	57,2	175	566	1 128	544	1 920	4 102	49,2	84,7	122
	48	72	1	0,6	53,4	53,4	57,2	257	906	1 903	750	2 748	5 985	114	184	252
	48	72	1	0,6	53,4	53,4	57,2	89	312	650	266	996	2 193	41,6	70,6	99,8
	48	72	1	0,6	53,4	53,4	57,2	121	485	1 059	347	1 432	3 208	97,6	162	220
45	50	63,5	0,6	0,15	52,3	52,3	54,5	88	307	628	270	1 027	2 251	44	77,5	112
	50	63,5	0,6	0,15	52,3	52,3	54,5	116	470	1 028	336	1 415	3 203	99	168	232
	50	63,5	0,6	0,15	52,3	52,3	54,5	40	164	355	120	516	1 182	36,2	64,1	91,7
	50	63,5	0,6	0,15	52,3	52,3	54,5	42	233	547	121	682	1 643	78,5	144	200
	50	63,5	0,6	0,15	53,7	51,9	54,7	34	101	201	100	316	657	30,8	48,4	66,2
	50	63,5	0,6	0,15	53,7	51,9	54,7	55	164	328	158	482	984	77,2	115	150
	50	63,5	0,6	0,15	53,7	51,9	54,7	38	113	226	108	329	667	76,6	113	146
	50	63,5	0,6	0,15	52,7	50,3	54,6	67	177	372	196	537	1 175	40	58	80
	50	63,5	0,6	0,15	52,7	50,3	54,6	96	251	524	276	734	1 558	80	113	149
	50	63,5	0,6	0,15	52,7	50,3	54,6	47	124	260	136	368	795	39	57	76
	50	63,5	0,6	0,15	52,7	50,3	54,6	68	177	368	194	512	1 078	80	112	146
	50	63,5	0,6	0,15	52,7	50,3	54,6	42	111	232	122	329	707	39	56	75
	50	63,5	0,6	0,15	52,7	50,3	54,6	61	159	330	174	459	964	80	111	145
	51	69	1	0,3	54,3	54,3	57,3	144	476	958	445	1 606	3 461	49,8	86,3	124
	51	69	1	0,3	54,3	54,3	57,3	208	763	1 622	606	2 308	5 082	115	189	259
	51	69	1	0,3	54,3	54,3	57,3	71	261	549	212	827	1 843	41,9	71,9	102
	51	69	1	0,3	54,3	54,3	57,3	89	389	869	254	1 145	2 622	95,8	163	223

Super precision angular contact ball bearings

Steel or ceramic balls
Steel or Vacrodur rings
Open or sealed

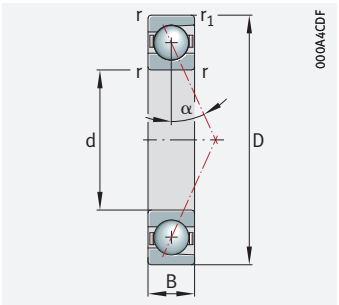

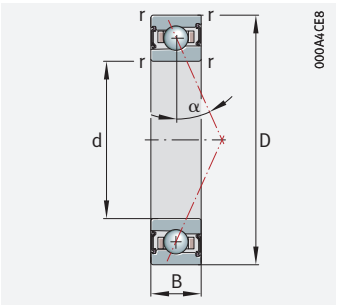

d = 45 – 50 mm

Main dimensions			Basic load ratings		Fatigue limit load	Limiting speeds[1]		Dimensions		Contact angle	Mass	Designation[2] [3]
d	D	B	dyn. C_r	stat. C_{0r}	C_{ur}	n_G grease	n_G oil[5]	r	r_1	α	m	X-life ➤ *1144*
			kN	kN	N	min^{-1}	min^{-1}	min.	min.	°	≈ kg	
45	75	16	12,3	7,5	790	26 000	40 000	1	1	15	0,262	**HS7009-C-T-P4S**
	75	16	11,6	7,1	750	24 000	36 000	1	1	25	0,261	**HS7009-E-T-P4S**
	75	16	11,6	6,8	550	30 000	48 000	1	1	25	0,248	**HC7009-E-T-P4S**
	75	16	12,8	7	740	27 100	41 000	1	0,6	17	0,25	**M7009-C-T-P4S-XL**
	75	16	12,2	6,7	710	25 500	37 800	1	0,6	25	0,25	**M7009-E-T-P4S-XL**
	75	16	12,9	6,7	540	33 700	49 200	1	0,6	17	0,23	**HCM7009-C-T-P4S-XL**
	75	16	12,3	6,4	520	32 000	46 000	1	0,6	25	0,23	**HCM7009-E-T-P4S-XL**
	75	16	31	9,4	480	34 500	54 100	1	0,6	17	0,23	**VCM7009-C-T-P4S-XL**
	75	16	29,5	9	455	32 800	49 200	1	0,6	25	0,23	**VCM7009-E-T-P4S-XL**
	85	19	34	17,7	1 880	17 000	28 000	1,1	1,1	15	0,423	**B7209-C-T-P4S**
	85	19	32,5	16,9	1 790	15 000	24 000	1,1	1,1	25	0,422	**B7209-E-T-P4S**
	85	19	34,5	17	1 370	22 000	36 000	1,1	1,1	15	0,37	**HCB7209-C-T-P4S**
	85	19	32,5	16,2	1 300	18 000	30 000	1,1	1,1	25	0,369	**HCB7209-E-T-P4S**
50	72	12	19,6	11,9	1 260	19 000	30 000	0,6	0,6	15	0,128	**B71910-C-T-P4S**
	72	12	18,6	11,3	1 200	17 000	26 000	0,6	0,6	25	0,128	**B71910-E-T-P4S**
	72	12	19,6	11,4	920	26 000	40 000	0,6	0,6	15	0,109	**HCB71910-C-T-P4S**
	72	12	18,6	10,8	870	24 000	36 000	0,6	0,6	25	0,109	**HCB71910-E-T-P4S**
	72	12	9,9	6,5	680	26 000	40 000	0,6	0,6	15	0,138	**HS71910-C-T-P4S**
	72	12	9,4	6,1	650	24 000	36 000	0,6	0,6	25	0,138	**HS71910-E-T-P4S**
	72	12	9,4	5,8	470	30 000	48 000	0,6	0,6	25	0,131	**HC71910-E-T-P4S**
	72	12	12,8	7	740	27 100	41 000	0,6	0,3	17	0,12	**M71910-C-T-P4S-XL**
	72	12	12,2	6,7	710	25 500	37 800	0,6	0,3	25	0,12	**M71910-E-T-P4S-XL**
	72	12	12,9	6,7	540	33 700	49 200	0,6	0,3	17	0,11	**HCM71910-C-T-P4S-XL**
	72	12	12,3	6,4	520	32 000	46 000	0,6	0,3	25	0,11	**HCM71910-E-T-P4S-XL**
	72	12	31	9,4	480	34 500	54 100	0,6	0,3	17	0,11	**VCM71910-C-T-P4S-XL**
	72	12	29,5	9	455	32 800	49 200	0,6	0,3	25	0,11	**VCM71910-E-T-P4S-XL**

medias *https://www.schaeffler.de/std/1F9A*

1) The limiting speeds are based on elastically preloaded single bearings.

2) Explanation of designations SP 1.

3) The bearings are also available with gap seals (type HSS, HCS, XCS or suffix 2RSD). Ordering examples: B7000-C-2RSD-T-P4S-UL and HSS7000-E-T-P4S-UL.

4) L = light preload; M = moderate preload; H = high preload.

5) Minimal quantity oil lubrication.

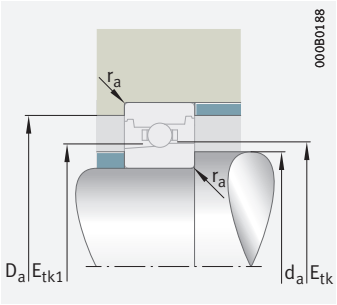

Mounting dimensions

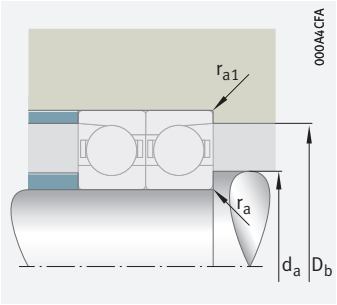

Mounting dimensions

	Mounting dimensions							Preload force[4] F_V			Lift-off force[4] K_{aE}			Axial rigidity[4] c_a		
d	d_a h12	D_a H12	r_a max.	r_{a1} max.	E_{tk} min.	E_{tk1} min.	E_{tk} E_{tk1} max.	L N	M N	H N	L N	M N	H N	L N/µm	M N/µm	H N/µm
45	51	69	1	0,3	56,7	54,6	58,2	43	130	259	130	409	853	34,3	54,1	74,3
	51	69	1	0,3	56,7	54,6	58,2	70	210	421	203	621	1 269	85,4	128	167
	51	69	1	0,3	56,7	54,6	58,2	48	143	286	137	417	848	84,4	125	161
	51	69	1	0,3	57,2	54,8	59	74	196	413	217	595	1 303	44	64	88
	51	69	1	0,3	57,2	54,8	59	106	278	580	305	812	1 726	88	124	164
	51	69	1	0,3	57,2	54,8	59	52	137	288	151	408	881	43	62	84
	51	69	1	0,3	57,2	54,8	59	75	196	407	214	567	1 194	88	123	161
	51	69	1	0,3	57,2	54,8	59	47	123	258	135	364	784	43	62	82
	51	69	1	0,3	57,2	54,8	59	67	176	365	192	508	1 068	88	123	160
	52,5	78	1	0,6	58,5	58,5	62,2	182	592	1 182	567	2 003	4 286	52,2	90	129
	52,5	78	1	0,6	58,5	58,5	62,2	268	948	1 994	782	2 873	6 261	121	196	268
	52,5	78	1	0,6	58,5	58,5	62,2	93	329	685	279	1 047	2 307	44,4	75,3	106
	52,5	78	1	0,6	58,5	58,5	62,2	123	500	1 095	354	1 475	3 312	103	172	233
50	55	67,5	0,6	0,15	56,8	56,8	58,9	89	313	642	274	1 044	2 293	45,6	80,2	116
	55	67,5	0,6	0,15	56,8	56,8	58,9	117	479	1 049	340	1 439	3 263	103	174	241
	55	67,5	0,6	0,15	56,8	56,8	58,9	41	167	362	121	525	1 205	37,5	66,4	95
	55	67,5	0,6	0,15	56,8	56,8	58,9	40	229	542	115	671	1 626	79,7	148	205
	55	67,5	0,6	0,15	58,2	56,4	59,1	35	105	209	104	328	682	32,6	51,2	70
	55	67,5	0,6	0,15	58,2	56,4	59,1	56	169	338	163	497	1 014	81,7	122	159
	55	67,5	0,6	0,15	58,2	56,4	59,1	39	116	231	110	336	682	80,9	119	154
	55	67,5	0,6	0,3	57,2	54,8	58,9	74	196	413	217	595	1 303	44	64	88
	55	67,5	0,6	0,3	57,2	54,8	58,9	106	278	580	305	812	1 726	88	124	164
	55	67,5	0,6	0,15	57,2	54,8	58,9	52	137	288	151	408	881	43	62	84
	55	67,5	0,6	0,15	57,2	54,8	58,9	75	196	407	214	567	1 194	88	123	161
	55	67,5	0,6	0,15	57,2	54,8	58,9	47	123	258	135	364	784	43	62	82
	55	67,5	0,6	0,15	57,2	54,8	58,9	67	176	365	192	508	1 068	88	123	160

Super precision angular contact ball bearings

Steel or ceramic balls
Steel or Vacrodur rings
Open or sealed

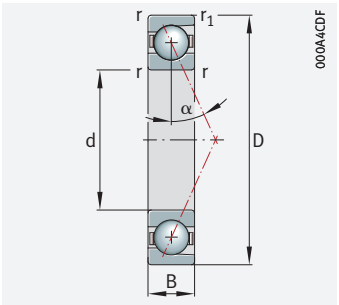

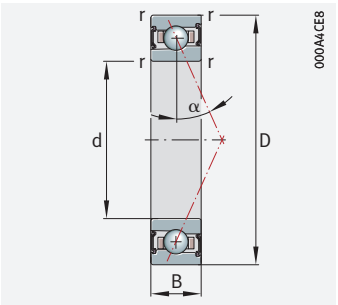

d = 50 – 55 mm

Main dimensions			Basic load ratings		Fatigue limit load	Limiting speeds[1]		Dimensions		Contact angle	Mass	Designation[2] [3]
d	D	B	dyn. C_r	stat. C_{0r}	C_{ur}	n_G grease	n_G oil[5]	r	r_1	α	m	X-life ➤ *1144*
			kN	kN	N	min^{-1}	min^{-1}	min.	min.	°	≈ kg	
50	80	16	29	16,1	1 710	18 000	28 000	1	1	15	0,25	**B7010-C-T-P4S**
	80	16	27,5	15,3	1 620	16 000	24 000	1	1	25	0,25	**B7010-E-T-P4S**
	80	16	29	15,4	1 240	24 000	38 000	1	1	15	0,213	**HCB7010-C-T-P4S**
	80	16	27,5	14,7	1 180	22 000	34 000	1	1	25	0,213	**HCB7010-E-T-P4S**
	80	16	12,8	8,2	860	24 000	38 000	1	1	15	0,283	**HS7010-C-T-P4S**
	80	16	12,1	7,7	820	22 000	34 000	1	1	25	0,282	**HS7010-E-T-P4S**
	80	16	12,1	7,4	600	28 000	43 000	1	1	25	0,269	**HC7010-E-T-P4S**
	80	16	13,1	7,4	780	25 400	38 500	1	0,6	17	0,27	**M7010-C-T-P4S-XL**
	80	16	12,4	7	740	23 900	35 400	1	0,6	25	0,27	**M7010-E-T-P4S-XL**
	80	16	13,1	7,1	570	31 600	46 200	1	0,6	17	0,26	**HCM7010-C-T-P4S-XL**
	80	16	12,5	6,7	540	30 000	43 100	1	0,6	25	0,26	**HCM7010-E-T-P4S-XL**
	80	16	31,5	9,9	500	32 400	50 800	1	0,6	17	0,26	**VCM7010-C-T-P4S-XL**
	80	16	30	9,4	480	30 800	46 200	1	0,6	25	0,26	**VCM7010-E-T-P4S-XL**
	90	20	43	22,4	2 370	16 000	26 000	1,1	1,1	15	0,448	**B7210-C-T-P4S**
	90	20	41	21,4	2 260	14 000	22 000	1,1	1,1	25	0,446	**B7210-E-T-P4S**
	90	20	43	21,4	1 730	20 000	34 000	1,1	1,1	15	0,384	**HCB7210-C-T-P4S**
	90	20	41,5	20,4	1 650	17 000	28 000	1,1	1,1	25	0,382	**HCB7210-E-T-P4S**
55	80	13	23,5	14,4	1 530	17 000	26 000	1	1	15	0,174	**B71911-C-T-P4S**
	80	13	22,2	13,7	1 450	15 000	24 000	1	1	25	0,174	**B71911-E-T-P4S**
	80	13	23,5	13,8	1 110	24 000	36 000	1	1	15	0,148	**HCB71911-C-T-P4S**
	80	13	22,3	13,1	1 060	22 000	32 000	1	1	25	0,148	**HCB71911-E-T-P4S**
	80	13	13	8,5	900	24 000	36 000	1	1	15	0,186	**HS71911-C-T-P4S**
	80	13	12,3	8	850	22 000	32 000	1	1	25	0,186	**HS71911-E-T-P4S**
	80	13	12,3	7,7	620	28 000	43 000	1	1	25	0,172	**HC71911-E-T-P4S**
	80	13	18,5	9,9	1 050	24 500	37 100	1	0,6	17	0,16	**M71911-C-T-P4S-XL**
	80	13	17,7	9,5	1 000	23 000	34 100	1	0,6	25	0,16	**M71911-E-T-P4S-XL**

medias *https://www.schaeffler.de/std/1F9A*

1) The limiting speeds are based on elastically preloaded single bearings.

2) Explanation of designations SP 1.

3) The bearings are also available with gap seals (type HSS, HCS, XCS or suffix 2RSD). Ordering examples: B7000-C-2RSD-T-P4S-UL and HSS7000-E-T-P4S-UL.

4) L = light preload; M = moderate preload; H = high preload.

5) Minimal quantity oil lubrication.

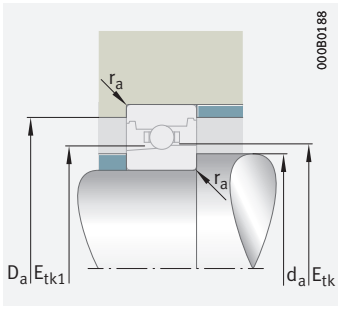

Mounting dimensions

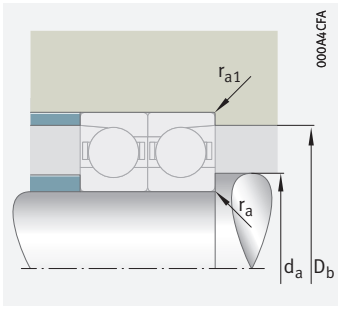

Mounting dimensions

	Mounting dimensions							Preload force[4] F_V			Lift-off force[4] K_{aE}			Axial rigidity[4] c_a		
d	d_a h12	D_a H12	r_a max.	r_{a1} max.	E_{tk} min.	E_{tk1} min.	E_{tk} E_{tk1} max.	L N	M N	H N	L N	M N	H N	L N/µm	M N/µm	H N/µm
50	56	74	1	0,3	59,3	59,3	62,3	148	493	994	459	1 659	3 579	52,3	90,5	130
	56	74	1	0,3	59,3	59,3	62,3	209	774	1 648	610	2 336	5 151	120	197	270
	56	74	1	0,3	59,3	59,3	62,3	73	268	566	217	848	1 894	43,9	75,3	107
	56	74	1	0,3	59,3	59,3	62,3	90	400	895	259	1 175	2 697	100	171	234
	56	74	1	0,3	61,7	59,6	63	45	135	269	135	424	884	36,4	57,4	78,8
	56	74	1	0,3	61,7	59,6	63	72	216	431	208	635	1 297	90,6	135	176
	56	74	1	0,3	61,7	59,6	63	50	149	298	143	435	883	90	133	172
	56	74	1	0,6	61,2	58,8	63	78	206	435	229	627	1 373	46	67	92
	56	74	1	0,6	61,2	58,8	63	112	293	610	321	855	1 816	92	130	171
	56	74	1	0,3	61,2	58,8	63	55	144	303	159	430	928	45	65	88
	56	74	1	0,3	61,2	58,8	63	79	206	429	225	596	1 257	92	129	169
	56	74	1	0,3	61,2	58,8	63	49	129	271	143	384	825	45	64	86
	56	74	1	0,3	61,2	58,8	63	71	185	385	202	534	1 124	92	128	167
	57	83	1	0,6	62,4	62,4	66,8	240	771	1 534	746	2 606	5 556	59,9	103	147
	57	83	1	0,6	62,4	62,4	66,8	352	1 221	2 553	1 027	3 697	8 006	138	223	303
	57	83	1	0,6	62,4	62,4	66,8	126	434	898	377	1 383	3 027	51,4	86,5	122
	57	83	1	0,6	62,4	62,4	66,8	168	656	1 420	484	1 933	4 292	120	197	265
55	60	75,5	0,6	0,3	62,8	62,8	65,1	111	382	780	340	1 274	2 784	50,8	88,6	128
	60	75,5	0,6	0,3	62,8	62,8	65,1	149	588	1 278	431	1 768	3 973	115	193	266
	60	75,5	0,6	0,3	62,8	62,8	65,1	53	208	447	157	654	1 487	42,4	74,1	106
	60	75,5	0,6	0,3	62,8	62,8	65,1	57	296	686	164	867	2 058	93	167	230
	60	75,5	0,6	0,3	64,2	62,1	65,4	45	135	269	135	424	882	37,3	58,6	80,3
	60	75,5	0,6	0,3	64,2	62,1	65,4	73	219	438	211	645	1 317	93,2	139	181
	60	75,5	0,6	0,3	64,2	62,1	65,4	51	152	304	145	442	897	92,7	137	177
	60	75,5	1	0,6	62,7	59,7	65,1	104	276	583	307	840	1 838	50	73	100
	60	75,5	1	0,6	62,7	59,7	65,1	150	393	820	431	1 148	2 438	100	141	186

Super precision angular contact ball bearings

Steel or ceramic balls
Steel or Vacrodur rings
Open or sealed

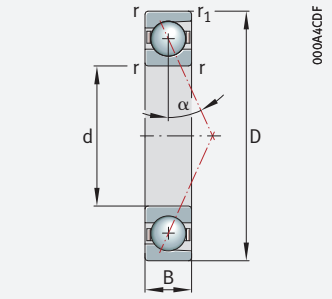

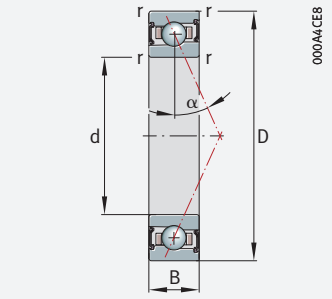

d = 55 – 60 mm

Main dimensions			Basic load ratings		Fatigue limit load	Limiting speeds[1]		Dimensions		Contact angle	Mass	Designation[2) 3)]
d	D	B	dyn. C_r	stat. C_{0r}	C_{ur}	n_G grease	n_G oil[5)]	r	r_1	α	m	X-life ➤ *1144*
			kN	kN	N	min^{-1}	min^{-1}	min.	min.	°	≈ kg	
55	80	13	18,5	9,5	760	30 400	44 500	1	0,6	17	0,13	**HCM71911-C-T-P4S-XL**
	80	13	17,7	9,1	730	28 900	41 500	1	0,6	25	0,13	**HCM71911-E-T-P4S-XL**
	80	13	44,5	13,3	680	31 200	48 900	1	0,6	17	0,13	**VCM71911-C-T-P4S-XL**
	80	13	42,5	12,7	650	29 700	44 500	1	0,6	25	0,13	**VCM71911-E-T-P4S-XL**
	90	18	38,5	22,1	2 340	16 000	24 000	1,1	1,1	15	0,371	**B7011-C-T-P4S**
	90	18	37	21	2 230	14 000	22 000	1,1	1,1	25	0,371	**B7011-E-T-P4S**
	90	18	39	21,2	1 710	22 000	34 000	1,1	1,1	15	0,31	**HCB7011-C-T-P4S**
	90	18	37	20,1	1 620	20 000	30 000	1,1	1,1	25	0,311	**HCB7011-E-T-P4S**
	90	18	17,9	11,5	1 210	22 000	34 000	1,1	1,1	15	0,405	**HS7011-C-T-P4S**
	90	18	16,9	10,9	1 150	20 000	30 000	1,1	1,1	25	0,404	**HS7011-E-T-P4S**
	90	18	17	10,4	840	26 000	40 000	1,1	1,1	25	0,386	**HC7011-E-T-P4S**
	90	18	19,4	11	1 160	22 800	34 500	1,1	0,6	17	0,39	**M7011-C-T-P4S-XL**
	90	18	18,5	10,5	1 110	21 400	31 800	1,1	0,6	25	0,39	**M7011-E-T-P4S-XL**
	90	18	19,5	10,5	850	28 300	41 400	1,1	0,6	17	0,36	**HCM7011-C-T-P4S-XL**
	90	18	18,6	10	810	26 900	38 700	1,1	0,6	25	0,36	**HCM7011-E-T-P4S-XL**
	90	18	46,5	14,7	750	29 000	45 600	1,1	0,6	17	0,36	**VCM7011-C-T-P4S-XL**
	90	18	44,5	14	720	27 600	41 400	1,1	0,6	25	0,36	**VCM7011-E-T-P4S-XL**
	100	21	47	26,5	2 800	14 000	22 000	1,5	1,5	15	0,619	**B7211-C-T-P4S**
	100	21	45	25	2 650	13 000	20 000	1,5	1,5	25	0,617	**B7211-E-T-P4S**
	100	21	47	25	2 030	18 000	30 000	1,5	1,5	15	0,546	**HCB7211-C-T-P4S**
	100	21	45	24	1 930	15 000	24 000	1,5	1,5	25	0,544	**HCB7211-E-T-P4S**
60	85	13	24,7	16	1 690	16 000	24 000	1	1	15	0,188	**B71912-C-T-P4S**
	85	13	23,4	15,2	1 610	14 000	22 000	1	1	25	0,188	**B71912-E-T-P4S**
	85	13	24,7	15,3	1 230	22 000	34 000	1	1	15	0,159	**HCB71912-C-T-P4S**
	85	13	23,4	14,5	1 170	20 000	30 000	1	1	25	0,159	**HCB71912-E-T-P4S**

medias *https://www.schaeffler.de/std/1F9A*

1) The limiting speeds are based on elastically preloaded single bearings.

2) Explanation of designations SP 1.

3) The bearings are also available with gap seals (type HSS, HCS, XCS or suffix 2RSD). Ordering examples: B7000-C-2RSD-T-P4S-UL and HSS7000-E-T-P4S-UL.

4) L = light preload; M = moderate preload; H = high preload.

5) Minimal quantity oil lubrication.

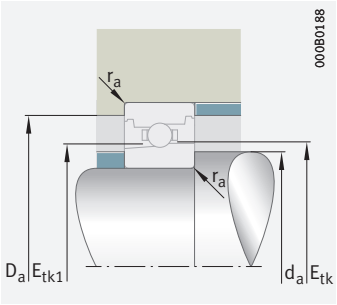

Mounting dimensions

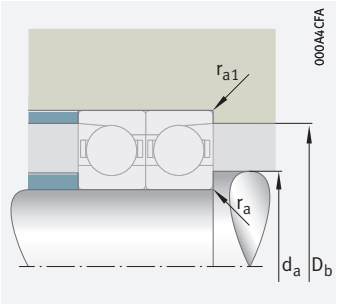

Mounting dimensions

	Mounting dimensions							Preload force[4] F_V			Lift-off force[4] K_{aE}			Axial rigidity[4] c_a		
d	d_a h12	D_a H12	r_a max.	r_{a1} max.	E_{tk} min.	E_{tk1} min.	E_{tk} E_{tk1} max.	L N	M N	H N	L N	M N	H N	L N/µm	M N/µm	H N/µm
55	60	75,5	0,6	0,3	62,7	59,7	65,1	73	194	406	213	576	1 243	49	71	95
	60	75,5	0,6	0,3	62,7	59,7	65,1	106	277	575	303	801	1 687	100	140	183
	60	75,5	0,6	0,3	62,7	59,7	65,1	66	174	363	191	514	1 105	49	70	94
	60	75,5	0,6	0,3	62,7	59,7	65,1	95	249	516	272	718	1 509	100	139	182
	62	83	1	0,6	65,9	65,9	69,6	205	670	1 344	635	2 253	4 837	61,4	106	151
	62	83	1	0,6	65,9	65,9	69,6	296	1 059	2 234	862	3 197	6 983	142	230	314
	62	83	1	0,6	65,9	65,9	69,6	102	366	765	305	1 158	2 559	51,9	87,9	124
	62	83	1	0,6	65,9	65,9	69,6	136	562	1 236	390	1 653	3 728	121	203	275
	62	83	1	0,6	68,5	65,9	70,3	62	187	374	187	588	1 225	42,2	66,5	91,1
	62	83	1	0,6	68,5	65,9	70,3	101	304	607	292	895	1 826	106	157	206
	62	83	1	0,6	68,5	65,9	70,3	70	210	421	201	613	1 244	105	155	201
	62	83	1,1	0,6	67,7	64,7	70,1	116	306	645	340	931	2 038	55	80	110
	62	83	1,1	0,6	67,7	64,7	70,1	166	435	908	477	1 271	2 700	110	155	205
	62	83	1	0,6	67,7	64,7	70,1	81	214	450	236	638	1 378	54	78	105
	62	83	1	0,6	67,7	64,7	70,1	117	306	637	335	887	1 869	110	154	201
	62	83	1	0,6	67,7	64,7	70,1	73	192	403	212	570	1 225	54	77	103
	62	83	1	0,6	67,7	64,7	70,1	105	275	572	301	794	1 671	109	153	200
	63	92	1,5	0,6	69,9	69,9	74,3	258	832	1 662	800	2 800	5 985	66,7	114	163
	63	92	1,5	0,6	69,9	69,9	74,3	378	1 321	2 767	1 103	3 991	8 652	155	249	339
	63	92	1,5	0,6	69,9	69,9	74,3	132	460	956	395	1 460	3 203	56,9	95,6	135
	63	92	1,5	0,6	69,9	69,9	74,3	180	709	1 540	518	2 088	4 646	134	220	297
60	65	80,5	0,6	0,3	67,8	67,8	70,1	116	401	822	354	1 333	2 919	54,5	95,1	137
	65	80,5	0,6	0,3	67,8	67,8	70,1	155	617	1 344	448	1 853	4 171	124	208	286
	65	80,5	0,6	0,3	67,8	67,8	70,1	54	214	462	159	671	1 530	45,1	79	112
	65	80,5	0,6	0,3	67,8	67,8	70,1	57	303	707	163	887	2 118	98,5	179	246

Super precision angular contact ball bearings

Steel or ceramic balls
Steel or Vacrodur rings
Open or sealed

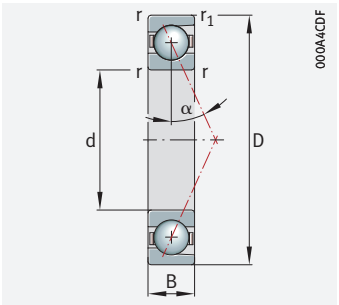

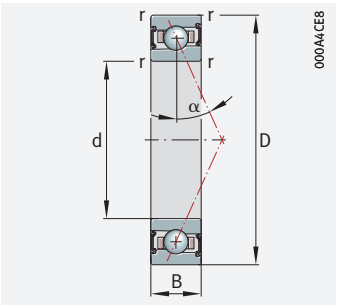

d = 60 – 60 mm

Main dimensions			Basic load ratings		Fatigue limit load	Limiting speeds[1]		Dimensions		Contact angle	Mass	Designation[2] [3]
d	D	B	dyn. C_r	stat. C_{0r}	C_{ur}	n_G grease	n_G oil[5]	r	r_1	α	m	X-life ➤ *1144*
			kN	kN	N	min^{-1}	min^{-1}	min.	min.	°	≈ kg	
60	85	13	13,4	9,2	970	22 000	34 000	1	1	15	0,2	**HS71912-C-T-P4S**
	85	13	12,6	8,7	920	20 000	30 000	1	1	25	0,2	**HS71912-E-T-P4S**
	85	13	12,7	8,3	670	26 000	40 000	1	1	25	0,185	**HC71912-E-T-P4S**
	85	13	19,4	11	1 160	22 800	34 500	1	0,6	17	0,17	**M71912-C-T-P4S-XL**
	85	13	18,5	10,5	1 110	21 400	31 800	1	0,6	25	0,17	**M71912-E-T-P4S-XL**
	85	13	19,5	10,5	850	28 300	41 400	1	0,6	17	0,14	**HCM71912-C-T-P4S-XL**
	85	13	18,6	10	810	26 900	38 700	1	0,6	25	0,14	**HCM71912-E-T-P4S-XL**
	85	13	46,5	14,7	750	29 000	45 600	1	0,6	17	0,14	**VCM71912-C-T-P4S-XL**
	85	13	44,5	14	720	27 600	41 400	1	0,6	25	0,14	**VCM71912-E-T-P4S-XL**
	95	18	40	23,8	2 500	15 000	22 000	1,1	1,1	15	0,395	**B7012-C-T-P4S**
	95	18	38	22,6	2 390	13 000	20 000	1,1	1,1	25	0,396	**B7012-E-T-P4S**
	95	18	40	22,7	1 830	20 000	32 000	1,1	1,1	15	0,335	**HCB7012-C-T-P4S**
	95	18	38	21,6	1 740	19 000	28 000	1,1	1,1	25	0,335	**HCB7012-E-T-P4S**
	95	18	18,6	12,5	1 320	20 000	32 000	1,1	1,1	15	0,433	**HS7012-C-T-P4S**
	95	18	17,6	11,8	1 250	18 000	28 000	1,1	1,1	25	0,433	**HS7012-E-T-P4S**
	95	18	17,6	11,3	910	24 000	36 000	1,1	1,1	25	0,413	**HC7012-E-T-P4S**
	95	18	19,8	11,6	1 220	21 300	32 300	1,1	0,6	17	0,42	**M7012-C-T-P4S-XL**
	95	18	18,8	11	1 170	20 000	29 700	1,1	0,6	25	0,42	**M7012-E-T-P4S-XL**
	95	18	19,8	11,1	890	26 500	38 800	1,1	0,6	17	0,39	**HCM7012-C-T-P4S-XL**
	95	18	18,9	10,6	850	25 200	36 200	1,1	0,6	25	0,39	**HCM7012-E-T-P4S-XL**
	95	18	47,5	15,5	790	27 100	42 600	1,1	0,6	17	0,39	**VCM7012-C-T-P4S-XL**
	95	18	45,5	14,8	750	25 900	38 800	1,1	0,6	25	0,39	**VCM7012-E-T-P4S-XL**
	110	22	56	31	3 300	13 000	20 000	1,5	1,5	15	0,795	**B7212-C-T-P4S**
	110	22	53	29,5	3 150	12 000	19 000	1,5	1,5	25	0,793	**B7212-E-T-P4S**
	110	22	56	29,5	2 390	16 000	26 000	1,5	1,5	15	0,687	**HCB7212-C-T-P4S**
	110	22	53	28,5	2 280	14 000	22 000	1,5	1,5	25	0,685	**HCB7212-E-T-P4S**

medias *https://www.schaeffler.de/std/1F9A*

[1] The limiting speeds are based on elastically preloaded single bearings.

[2] Explanation of designations SP 1.

[3] The bearings are also available with gap seals (type HSS, HCS, XCS or suffix 2RSD). Ordering examples: B7000-C-2RSD-T-P4S-UL and HSS7000-E-T-P4S-UL.

[4] L = light preload; M = moderate preload; H = high preload.

[5] Minimal quantity oil lubrication.

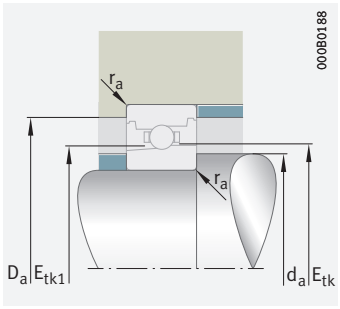

Mounting dimensions

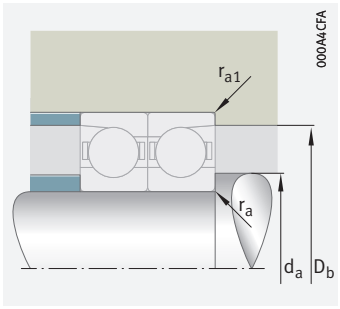

Mounting dimensions

	Mounting dimensions							Preload force[4] F_V			Lift-off force[4] K_{aE}			Axial rigidity[4] c_a		
d	d_a h12	D_a H12	r_a	r_{a1}	E_{tk}	E_{tk1}	E_{tk} E_{tk1}	L	M	H	L	M	H	L	M	H
			max.	max.	min.	min.	max.	N	N	N	N	N	N	N/µm	N/µm	N/µm
60	65	80,5	0,6	0,3	69,2	67,1	70,4	47	141	281	140	442	920	39,5	62,1	85
	65	80,5	0,6	0,3	69,2	67,1	70,4	76	228	455	219	670	1 368	98,8	147	192
	65	80,5	0,6	0,3	69,2	67,1	70,4	52	155	311	148	452	917	97,7	144	186
	65	80,5	1	0,6	67,7	64,7	70	116	306	645	340	931	2 038	55	80	110
	65	80,5	1	0,6	67,7	64,7	70	166	435	908	477	1 271	2 700	110	155	205
	65	80,5	0,6	0,3	67,7	64,7	70	81	214	450	236	638	1 378	54	78	105
	65	80,5	0,6	0,3	67,7	64,7	70	117	306	637	335	887	1 869	110	154	201
	65	80,5	0,6	0,3	67,7	64,7	70	73	192	403	212	570	1 225	54	77	103
	65	80,5	0,6	0,3	67,7	64,7	70	105	275	572	301	794	1 671	109	153	200
	67	88	1	0,6	70,9	70,9	74,5	209	687	1 381	647	2 304	4 952	64	110	157
	67	88	1	0,6	70,9	70,9	74,5	297	1 069	2 259	864	3 221	7 045	147	239	326
	67	88	1	0,6	70,9	70,9	74,5	106	379	794	315	1 198	2 651	54,4	92,2	130
	67	88	1	0,6	70,9	70,9	74,5	136	569	1 256	391	1 673	3 782	126	211	286
	67	88	1	0,6	73,5	70,9	75,3	65	194	388	194	609	1 269	44,8	70,5	96,4
	67	88	1	0,6	73,5	70,9	75,3	105	316	631	304	929	1 896	112	167	218
	67	88	1	0,6	73,5	70,9	75,3	73	219	438	209	638	1 294	112	165	213
	67	88	1	0,6	72,7	69,7	75,1	122	323	680	358	981	2 150	57	84	115
	67	88	1	0,6	72,7	69,7	75,1	175	458	956	503	1 339	2 845	115	162	214
	67	88	1	0,6	72,7	69,7	75,1	86	226	474	249	673	1 453	57	81	110
	67	88	1	0,6	72,7	69,7	75,1	123	323	671	353	934	1 968	115	161	211
	67	88	1	0,6	72,7	69,7	75,1	77	203	424	223	601	1 292	56	81	108
	67	88	1	0,6	72,7	69,7	75,1	111	290	602	317	837	1 760	115	160	209
	69,5	101,5	1,5	0,6	77	77	81,9	312	996	1 982	968	3 352	7 140	70,9	121	172
	69,5	101,5	1,5	0,6	77	77	81,9	463	1 586	3 304	1 351	4 794	10 334	165	264	358
	69,5	101,5	1,5	0,6	77	77	81,9	163	557	1 149	488	1 767	3 852	60,9	102	143
	69,5	101,5	1,5	0,6	77	77	81,9	226	859	1 847	651	2 531	5 576	144	234	315

Super precision angular contact ball bearings

Steel or ceramic balls
Steel or Vacrodur rings
Open or sealed

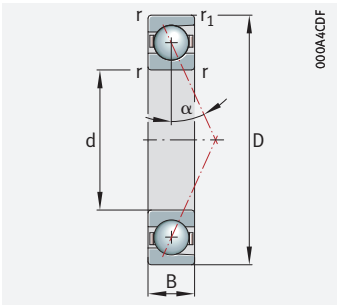

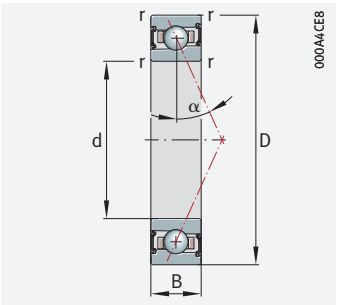

d = 65 – 65 mm

Main dimensions			Basic load ratings		Fatigue limit load	Limiting speeds[1]		Dimensions		Contact angle	Mass	Designation[2] [3]
d	D	B	dyn. C_r	stat. C_{0r}	C_{ur}	n_G grease	n_G oil[5]	r	r_1	α	m	X-life ➤ *1144*
			kN	kN	N	min^{-1}	min^{-1}	min.	min.	°	≈ kg	
65	90	13	25	16,9	1 790	15 000	22 000	1	1	15	0,2	**B71913-C-T-P4S**
	90	13	23,7	16	1 690	13 000	20 000	1	1	25	0,2	**B71913-E-T-P4S**
	90	13	25	16,1	1 300	20 000	32 000	1	1	15	0,17	**HCB71913-C-T-P4S**
	90	13	23,8	15,3	1 230	19 000	28 000	1	1	25	0,17	**HCB71913-E-T-P4S**
	90	13	13,8	9,9	1 040	20 000	32 000	1	1	15	0,214	**HS71913-C-T-P4S**
	90	13	13	9,3	990	18 000	28 000	1	1	25	0,214	**HS71913-E-T-P4S**
	90	13	13	8,9	720	24 000	36 000	1	1	25	0,198	**HC71913-E-T-P4S**
	90	13	19,8	11,6	1 220	21 300	32 300	1	0,6	17	0,18	**M71913-C-T-P4S-XL**
	90	13	18,8	11	1 170	20 000	29 700	1	0,6	25	0,18	**M71913-E-T-P4S-XL**
	90	13	19,8	11,1	890	26 500	38 800	1	0,6	17	0,15	**HCM71913-C-T-P4S-XL**
	90	13	18,9	10,6	850	25 200	36 200	1	0,6	25	0,15	**HCM71913-E-T-P4S-XL**
	90	13	47,5	15,5	790	27 100	42 600	1	0,6	17	0,15	**VCM71913-C-T-P4S-XL**
	90	13	45,5	14,8	750	25 900	38 800	1	0,6	25	0,15	**VCM71913-E-T-P4S-XL**
	100	18	41,5	25,5	2 700	14 000	22 000	1,1	1,1	15	0,42	**B7013-C-T-P4S**
	100	18	39	24,1	2 550	13 000	19 000	1,1	1,1	25	0,42	**B7013-E-T-P4S**
	100	18	41,5	24,3	1 960	19 000	30 000	1,1	1,1	15	0,356	**HCB7013-C-T-P4S**
	100	18	39,5	23,1	1 860	17 000	26 000	1,1	1,1	25	0,356	**HCB7013-E-T-P4S**
	100	18	19,3	13,4	1 420	19 000	30 000	1,1	1,1	15	0,461	**HS7013-C-T-P4S**
	100	18	18,2	12,7	1 350	17 000	26 000	1,1	1,1	25	0,461	**HS7013-E-T-P4S**
	100	18	18,2	12,2	980	22 000	34 000	1,1	1,1	25	0,44	**HC7013-E-T-P4S**
	100	18	20,1	12,1	1 280	20 000	30 400	1,1	0,6	17	0,44	**M7013-C-T-P4S-XL**
	100	18	19,1	11,6	1 230	18 800	27 900	1,1	0,6	25	0,44	**M7013-E-T-P4S-XL**
	100	18	20,1	11,6	940	24 900	36 400	1,1	0,6	17	0,41	**HCM7013-C-T-P4S-XL**
	100	18	19,2	11,1	890	23 700	34 000	1,1	0,6	25	0,41	**HCM7013-E-T-P4S-XL**
	100	18	48	16,3	830	25 500	40 000	1,1	0,6	17	0,41	**VCM7013-C-T-P4S-XL**
	100	18	46	15,5	790	24 300	36 400	1,1	0,6	25	0,41	**VCM7013-E-T-P4S-XL**

medias *https://www.schaeffler.de/std/1F9A*

[1] The limiting speeds are based on elastically preloaded single bearings.

[2] Explanation of designations SP 1.

[3] The bearings are also available with gap seals (type HSS, HCS, XCS or suffix 2RSD). Ordering examples: B7000-C-2RSD-T-P4S-UL and HSS7000-E-T-P4S-UL.

[4] L = light preload; M = moderate preload; H = high preload.

[5] Minimal quantity oil lubrication.

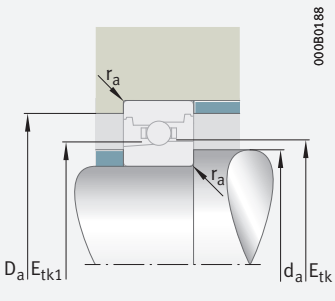

Mounting dimensions

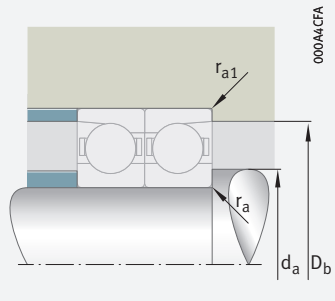

Mounting dimensions

	Mounting dimensions							Preload force[4] F_V			Lift-off force[4] K_{aE}			Axial rigidity[4] c_a		
d	d_a h12	D_a H12	r_a max.	r_{a1} max.	E_{tk} min.	E_{tk1} min.	E_{tk} E_{tk1} max.	L N	M N	H N	L N	M N	H N	L N/µm	M N/µm	H N/µm
65	70	85,5	0,6	0,3	72,8	72,8	75,1	117	409	839	360	1 356	2 973	56,2	98,1	141
	70	85,5	0,6	0,3	72,8	72,8	75,1	152	613	1 339	440	1 837	4 145	126	213	293
	70	85,5	0,6	0,3	72,8	72,8	75,1	55	219	473	161	684	1 562	46,6	81,7	116
	70	85,5	0,6	0,3	72,8	72,8	75,1	58	309	723	165	904	2 165	102	185	255
	70	85,5	0,6	0,3	74,2	72,1	75,3	48	144	287	143	450	937	41,5	65	88,8
	70	85,5	0,6	0,3	74,2	72,1	75,3	77	231	462	222	680	1 386	104	154	201
	70	85,5	0,6	0,3	74,2	72,1	75,3	53	160	321	153	466	946	103	152	196
	70	85,5	1	0,6	72,7	69,7	75	122	323	680	358	981	2 150	57	84	115
	70	85,5	1	0,6	72,7	69,7	75	175	458	956	503	1 339	2 845	115	162	214
	70	85,5	0,6	0,3	72,7	69,7	75	86	226	474	249	673	1 453	57	81	110
	70	85,5	0,6	0,3	72,7	69,7	75	123	323	671	353	934	1 968	115	161	211
	70	85,5	0,6	0,3	72,7	69,7	75	77	203	424	223	601	1 292	56	81	108
	70	85,5	0,6	0,3	72,7	69,7	75	111	290	602	317	837	1 760	115	160	209
	72	93	1	0,6	75,9	75,9	79,5	214	704	1 417	660	2 354	5 068	66,7	114	164
	72	93	1	0,6	75,9	75,9	79,5	308	1 111	2 350	896	3 347	7 323	154	251	342
	72	93	1	0,6	75,9	75,9	79,5	107	385	808	318	1 213	2 688	56,4	95,6	135
	72	93	1	0,6	75,9	75,9	79,5	137	577	1 276	392	1 694	3 836	131	219	297
	72	93	1	0,6	78,5	75,9	80,2	67	201	402	200	630	1 312	47,4	74,4	102
	72	93	1	0,6	78,5	75,9	80,2	109	328	656	315	964	1 967	119	177	231
	72	93	1	0,6	78,5	75,9	80,2	74	223	445	213	647	1 313	118	173	224
	72	93	1,1	0,6	77,7	74,7	80	128	339	715	377	1 032	2 260	60	88	120
	72	93	1,1	0,6	77,7	74,7	80	183	481	1 004	528	1 406	2 988	120	170	224
	72	93	1	0,6	77,7	74,7	80	90	237	498	262	707	1 528	59	85	115
	72	93	1	0,6	77,7	74,7	80	129	339	705	371	981	2 067	120	169	220
	72	93	1	0,6	77,7	74,7	80	81	213	446	234	631	1 358	59	84	113
	72	93	1	0,6	77,7	74,7	80	116	304	632	333	879	1 849	120	168	218

Super precision angular contact ball bearings

Steel or ceramic balls
Steel or Vacrodur rings
Open or sealed

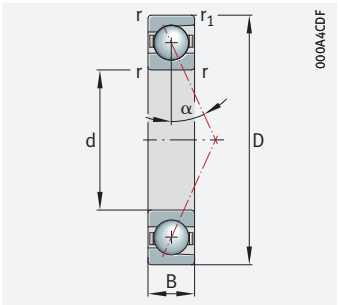

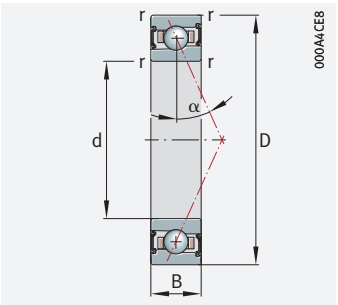

d = 65 – 70 mm

Main dimensions			Basic load ratings		Fatigue limit load	Limiting speeds[1]		Dimensions		Contact angle	Mass	Designation[2] [3]
d	D	B	dyn. C_r	stat. C_{0r}	C_{ur}	n_G grease	n_G oil[5]	r	r_1	α	m	X-life ➤ *1144*
			kN	kN	N	min^{-1}	min^{-1}	min.	min.	°	≈ kg	
65	120	23	68	38,5	4 050	12 000	19 000	1,5	1,5	15	1	**B7213-C-T-P4S**
	120	23	65	36,5	3 850	11 000	18 000	1,5	1,5	25	0,998	**B7213-E-T-P4S**
	120	23	68	36,5	2 950	15 000	24 000	1,5	1,5	15	0,866	**HCB7213-C-T-P4S**
	120	23	65	35	2 800	13 000	20 000	1,5	1,5	25	0,863	**HCB7213-E-T-P4S**
70	100	16	34,5	23	2 430	14 000	20 000	1	1	15	0,33	**B71914-C-T-P4S**
	100	16	32,5	21,8	2 300	12 000	19 000	1	1	25	0,33	**B71914-E-T-P4S**
	100	16	34,5	22	1 770	19 000	28 000	1	1	15	0,28	**HCB71914-C-T-P4S**
	100	16	32,5	20,8	1 680	17 000	26 000	1	1	25	0,28	**HCB71914-E-T-P4S**
	100	16	17,8	12,9	1 370	19 000	28 000	1	1	15	0,354	**HS71914-C-T-P4S**
	100	16	16,8	12,2	1 290	17 000	26 000	1	1	25	0,353	**HS71914-E-T-P4S**
	100	16	16,8	11,7	940	22 000	34 000	1	1	25	0,334	**HC71914-E-T-P4S**
	100	16	27	15,7	1 660	19 500	29 500	1	0,6	17	0,3	**M71914-C-T-P4S-XL**
	100	16	26	15	1 580	18 300	27 100	1	0,6	25	0,3	**M71914-E-T-P4S-XL**
	100	16	27	15	1 210	24 200	35 300	1	0,6	17	0,25	**HCM71914-C-T-P4S-XL**
	100	16	26	14,3	1 150	23 000	33 000	1	0,6	25	0,25	**HCM71914-E-T-P4S-XL**
	100	16	65	21	1 070	24 800	38 900	1	0,6	17	0,25	**VCM71914-C-T-P4S-XL**
	100	16	62	20,1	1 020	23 600	35 300	1	0,6	25	0,25	**VCM71914-E-T-P4S-XL**
	110	20	50	30,5	3 250	13 000	20 000	1,1	1,1	15	0,59	**B7014-C-T-P4S**
	110	20	48	29	3 100	11 000	18 000	1,1	1,1	25	0,59	**B7014-E-T-P4S**
	110	20	50	29,5	2 360	18 000	28 000	1,1	1,1	15	0,495	**HCB7014-C-T-P4S**
	110	20	48	28	2 240	16 000	24 000	1,1	1,1	25	0,495	**HCB7014-E-T-P4S**
	110	20	25	17,2	1 820	18 000	28 000	1,1	1,1	15	0,644	**HS7014-C-T-P4S**
	110	20	23,6	16,3	1 720	16 000	24 000	1,1	1,1	25	0,643	**HS7014-E-T-P4S**
	110	20	23,7	15,6	1 260	20 000	32 000	1,1	1,1	25	0,611	**HC7014-E-T-P4S**
	110	20	27,5	16,5	1 740	18 400	27 800	1,1	0,6	17	0,61	**M7014-C-T-P4S-XL**
	110	20	26,5	15,7	1 670	17 300	25 600	1,1	0,6	25	0,61	**M7014-E-T-P4S-XL**

medias *https://www.schaeffler.de/std/1F9A*

[1] The limiting speeds are based on elastically preloaded single bearings.

[2] Explanation of designations SP 1.

[3] The bearings are also available with gap seals (type HSS, HCS, XCS or suffix 2RSD). Ordering examples: B7000-C-2RSD-T-P4S-UL and HSS7000-E-T-P4S-UL.

[4] L = light preload; M = moderate preload; H = high preload.

[5] Minimal quantity oil lubrication.

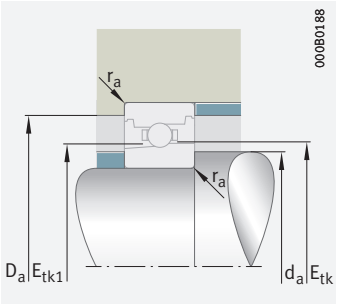

Mounting dimensions

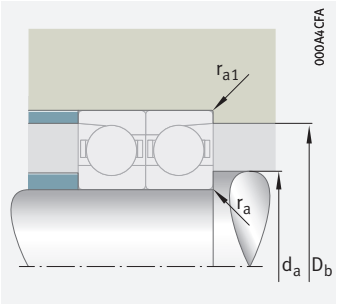

Mounting dimensions

	Mounting dimensions							Preload force[4] F_V			Lift-off force[4] K_{aE}			Axial rigidity[4] c_a		
d	d_a h12	D_a H12	r_a max.	r_{a1} max.	E_{tk} min.	E_{tk1} min.	E_{tk} E_{tk1} max.	L N	M N	H N	L N	M N	H N	L N/µm	M N/µm	H N/µm
65	75,5	109,5	1,5	0,6	83	83	88,6	386	1 224	2 431	1 198	4 118	8 752	78,9	134	191
	75,5	109,5	1,5	0,6	83	83	88,6	585	1 977	4 100	1 709	5 978	12 828	185	295	399
	75,5	109,5	1,5	0,6	83	83	88,6	205	690	1 419	614	2 192	4 757	68,2	113	159
	75,5	109,5	1,5	0,6	83	83	88,6	290	1 071	2 286	834	3 157	6 901	162	261	350
70	76	94,5	0,6	0,3	79,3	79,3	82,2	170	576	1 171	523	1 912	4 155	66	114	163
	76	94,5	0,6	0,3	79,3	79,3	82,2	233	886	1 902	677	2 658	5 898	151	249	341
	76	94,5	0,6	0,3	79,3	79,3	82,2	83	312	665	245	980	2 200	55,5	95,3	135
	76	94,5	0,6	0,3	79,3	79,3	82,2	98	459	1 040	281	1 343	3 118	126	218	298
	76	94,5	0,6	0,3	81,2	78,8	82,6	61	184	368	183	576	1 198	47	73,7	101
	76	94,5	0,6	0,3	81,2	78,8	82,6	99	298	597	287	877	1 789	118	176	229
	76	94,5	0,6	0,3	81,2	78,8	82,6	69	207	414	198	602	1 221	117	173	223
	76	94,5	0,6	0,3	79,3	75,7	82,1	165	437	921	485	1 327	2 905	65	96	131
	76	94,5	0,6	0,3	79,3	75,7	82,1	237	621	1 295	681	1 813	3 851	131	186	245
	76	94,5	0,6	0,3	79,3	75,7	82,1	116	306	641	337	910	1 965	65	93	125
	76	94,5	0,6	0,3	79,3	75,7	82,1	167	437	909	478	1 265	2 665	132	184	241
	76	94,5	0,6	0,3	79,3	75,7	82,1	104	274	574	302	812	1 747	64	92	123
	76	94,5	0,6	0,3	79,3	75,7	82,1	150	393	816	429	1 133	2 383	131	183	239
	77	102	1	0,6	82,4	82,4	86,7	276	894	1 790	853	2 995	6 414	73,5	125	179
	77	102	1	0,6	82,4	82,4	86,7	395	1 388	2 915	1 149	4 183	9 083	169	273	371
	77	102	1	0,6	82,4	82,4	86,7	139	487	1 014	414	1 538	3 380	62,3	105	147
	77	102	1	0,6	82,4	82,4	86,7	188	749	1 633	540	2 203	4 915	147	242	326
	77	102	1	0,6	85,2	82,3	87,5	87	261	523	261	820	1 706	52,2	81,9	112
	77	102	1	0,6	85,2	82,3	87,5	141	423	845	406	1 243	2 536	131	194	253
	77	102	1	0,6	85,2	82,3	87,5	98	293	587	280	853	1 731	130	192	248
	77	102	1	0,6	84,3	80,7	87,2	173	460	969	510	1 397	3 060	68	100	137
	77	102	1	0,6	84,3	80,7	87,2	249	653	1 362	716	1 908	4 053	137	194	256

Super precision angular contact ball bearings

Steel or ceramic balls
Steel or Vacrodur rings
Open or sealed

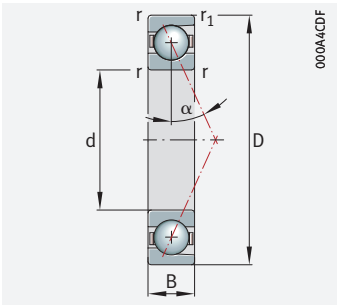

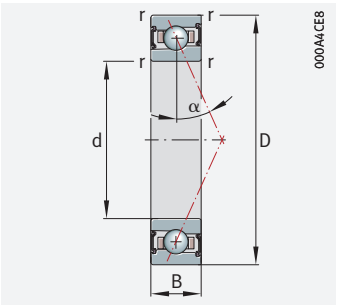

d = 70 – 75 mm

Main dimensions			Basic load ratings		Fatigue limit load	Limiting speeds[1]		Dimensions		Contact angle	Mass	Designation[2] [3]
d	D	B	dyn. C_r	stat. C_{0r}	C_{ur}	n_G grease	n_G oil[5]	r	r_1	α	m	X-life ➤ *1144*
			kN	kN	N	min^{-1}	min^{-1}	min.	min.	°	≈ kg	
70	110	20	27,5	15,8	1 270	22 800	33 400	1,1	0,6	17	0,56	**HCM7014-C-T-P4S-XL**
	110	20	26,5	15,1	1 210	21 700	31 200	1,1	0,6	25	0,56	**HCM7014-E-T-P4S-XL**
	110	20	66	22,1	1 130	23 400	36 700	1,1	0,6	17	0,56	**VCM7014-C-T-P4S-XL**
	110	20	63	21,1	1 080	22 300	33 400	1,1	0,6	25	0,56	**VCM7014-E-T-P4S-XL**
	125	24	71	41,5	4 400	11 000	18 000	1,5	1,5	15	1,1	**B7214-C-T-P4S**
	125	24	67	39,5	4 200	10 000	17 000	1,5	1,5	25	1,09	**B7214-E-T-P4S**
	125	24	71	39,5	3 200	14 000	22 000	1,5	1,5	15	0,954	**HCB7214-C-T-P4S**
	125	24	67	38	3 050	12 000	19 000	1,5	1,5	25	0,951	**HCB7214-E-T-P4S**
75	105	16	35	24,2	2 550	13 000	20 000	1	1	15	0,347	**B71915-C-T-P4S**
	105	16	33	22,9	2 420	11 000	18 000	1	1	25	0,347	**B71915-E-T-P4S**
	105	16	35	23,1	1 860	18 000	28 000	1	1	15	0,285	**HCB71915-C-T-P4S**
	105	16	33	21,9	1 770	16 000	24 000	1	1	25	0,285	**HCB71915-E-T-P4S**
	105	16	18,3	13,8	1 460	18 000	28 000	1	1	15	0,374	**HS71915-C-T-P4S**
	105	16	17,2	13	1 380	16 000	24 000	1	1	25	0,373	**HS71915-E-T-P4S**
	105	16	17,3	12,5	1 000	20 000	32 000	1	1	25	0,353	**HC71915-E-T-P4S**
	105	16	27,5	16,5	1 740	18 400	27 800	1	0,6	17	0,32	**M71915-C-T-P4S-XL**
	105	16	26,5	15,7	1 670	17 300	25 600	1	0,6	25	0,32	**M71915-E-T-P4S-XL**
	105	16	27,5	15,8	1 270	22 800	33 400	1	0,6	17	0,27	**HCM71915-C-T-P4S-XL**
	105	16	26,5	15,1	1 210	21 700	31 200	1	0,6	25	0,27	**HCM71915-E-T-P4S-XL**
	105	16	66	22,1	1 130	23 400	36 700	1	0,6	17	0,27	**VCM71915-C-T-P4S-XL**
	105	16	63	21,1	1 080	22 300	33 400	1	0,6	25	0,27	**VCM71915-E-T-P4S-XL**
	115	20	52	32,5	3 450	12 000	19 000	1,1	1,1	15	0,62	**B7015-C-T-P4S**
	115	20	49,5	31	3 300	11 000	17 000	1,1	1,1	25	0,62	**B7015-E-T-P4S**
	115	20	52	31,5	2 500	17 000	26 000	1,1	1,1	15	0,52	**HCB7015-C-T-P4S**
	115	20	49,5	29,5	2 390	15 000	24 000	1,1	1,1	25	0,52	**HCB7015-E-T-P4S**

medias *https://www.schaeffler.de/std/1F9A*

1) The limiting speeds are based on elastically preloaded single bearings.

2) Explanation of designations SP 1.

3) The bearings are also available with gap seals (type HSS, HCS, XCS or suffix 2RSD). Ordering examples: B7000-C-2RSD-T-P4S-UL and HSS7000-E-T-P4S-UL.

4) L = light preload; M = moderate preload; H = high preload.

5) Minimal quantity oil lubrication.

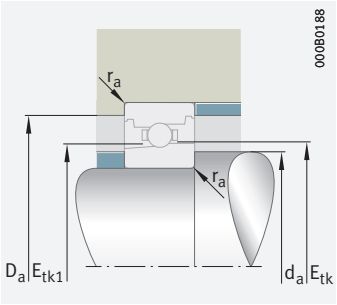

Mounting dimensions

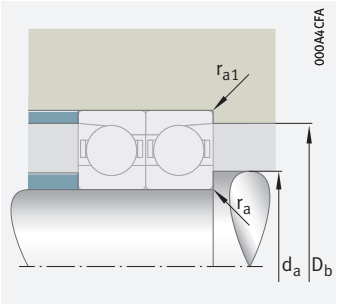

Mounting dimensions

	Mounting dimensions							Preload force[4] F_V			Lift-off force[4] K_{aE}			Axial rigidity[4] c_a		
d	d_a h12	D_a H12	r_a max.	r_{a1} max.	E_{tk} min.	E_{tk1} min.	$\frac{E_{tk}}{E_{tk1}}$ max.	L N	M N	H N	L N	M N	H N	L N/µm	M N/µm	H N/µm
70	77	102	1	0,6	84,3	80,7	87,2	122	322	675	355	958	2 069	68	97	131
	77	102	1	0,6	84,3	80,7	87,2	176	460	956	503	1 331	2 804	138	193	252
	77	102	1	0,6	84,3	80,7	87,2	110	289	605	318	855	1 839	67	96	129
	77	102	1	0,6	84,3	80,7	87,2	158	413	858	451	1 192	2 508	137	192	250
	80	115	1,5	0,6	88	88	93,6	399	1 269	2 524	1 238	4 260	9 062	83,1	141	201
	80	115	1,5	0,6	88	88	93,6	595	2 017	4 189	1 736	6 090	13 077	194	309	418
	80	115	1,5	0,6	88	88	93,6	211	711	1 464	630	2 253	4 894	71,6	119	166
	80	115	1,5	0,6	88	88	93,6	297	1 103	2 359	854	3 249	7 111	171	275	368
75	81	99,5	0,6	0,3	84,3	84,3	87,2	172	584	1 189	527	1 933	4 206	68	117	168
	81	99,5	0,6	0,3	84,3	84,3	87,2	235	897	1 928	682	2 688	5 970	156	257	351
	81	99,5	0,6	0,3	84,3	84,3	87,2	83	317	676	247	991	2 229	57,1	98,2	139
	81	99,5	0,6	0,3	84,3	84,3	87,2	95	454	1 034	273	1 328	3 094	128	223	305
	81	99,5	0,6	0,3	86,2	83,9	87,5	64	191	382	190	597	1 242	49,5	77,5	106
	81	99,5	0,6	0,3	86,2	83,9	87,5	101	304	607	292	891	1 817	123	183	239
	81	99,5	0,6	0,3	86,2	83,9	87,5	70	210	421	201	611	1 240	123	181	233
	81	99,5	1	0,6	84,3	80,7	87,1	173	460	969	510	1 397	3 060	68	100	137
	81	99,5	1	0,6	84,3	80,7	87,1	249	653	1 362	716	1 908	4 053	137	194	256
	81	99,5	0,6	0,3	84,3	80,7	87,1	122	322	675	355	958	2 069	68	97	131
	81	99,5	0,6	0,3	84,3	80,7	87,1	176	460	956	503	1 331	2 804	138	193	252
	81	99,5	0,6	0,3	84,3	80,7	87,1	110	289	605	318	855	1 839	67	96	129
	81	99,5	0,6	0,3	84,3	80,7	87,1	158	413	858	451	1 192	2 508	137	192	250
	82	107	1	0,6	87,4	87,4	91,7	280	911	1 827	865	3 043	6 525	76,3	130	186
	82	107	1	0,6	87,4	87,4	91,7	405	1 430	3 005	1 180	4 305	9 353	177	285	387
	82	107	1	0,6	87,4	87,4	91,7	145	508	1 059	431	1 603	3 524	65,4	110	154
	82	107	1	0,6	87,4	87,4	91,7	192	769	1 679	551	2 260	5 050	153	253	341

Super precision angular contact ball bearings

Steel or ceramic balls
Steel or Vacrodur rings
Open or sealed

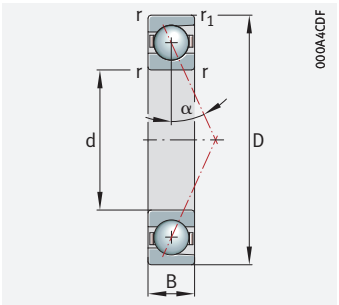

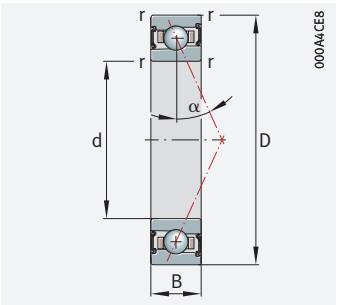

d = 75 – 80 mm

Main dimensions			Basic load ratings		Fatigue limit load	Limiting speeds[1]		Dimensions		Contact angle	Mass	Designation[2] [3]
d	D	B	dyn. C_r	stat. C_{0r}	C_{ur}	n_G grease	n_G oil[5]	r	r_1	α	m	X-life ➤ *1144*
			kN	kN	N	min^{-1}	min^{-1}	min.	min.	°	≈ kg	
75	115	20	25,5	17,9	1 900	17 000	26 000	1,1	1,1	15	0,679	**HS7015-C-T-P4S**
	115	20	23,9	17	1 800	15 000	24 000	1,1	1,1	25	0,678	**HS7015-E-T-P4S**
	115	20	24	16,2	1 310	19 000	30 000	1,1	1,1	25	0,644	**HC7015-E-T-P4S**
	115	20	28	17,3	1 830	17 400	26 400	1,1	0,6	17	0,64	**M7015-C-T-P4S-XL**
	115	20	26,5	16,5	1 750	16 400	24 300	1,1	0,6	25	0,64	**M7015-E-T-P4S-XL**
	115	20	28	16,6	1 330	21 600	31 600	1,1	0,6	17	0,59	**HCM7015-C-T-P4S-XL**
	115	20	27	15,8	1 270	20 600	29 500	1,1	0,6	25	0,59	**HCM7015-E-T-P4S-XL**
	115	20	67	23,2	1 180	22 200	34 800	1,1	0,6	17	0,59	**VCM7015-C-T-P4S-XL**
	115	20	64	22,1	1 130	21 100	31 600	1,1	0,6	25	0,59	**VCM7015-E-T-P4S-XL**
	130	25	73	44,5	4 650	11 000	18 000	1,5	1,5	15	1,2	**B7215-C-T-P4S**
	130	25	70	42,5	4 450	9 500	16 000	1,5	1,5	25	1,2	**B7215-E-T-P4S**
	130	25	73	42,5	3 400	14 000	22 000	1,5	1,5	15	1,05	**HCB7215-C-T-P4S**
	130	25	70	40,5	3 250	12 000	19 000	1,5	1,5	25	1,04	**HCB7215-E-T-P4S**
80	110	16	35,5	25,5	2 700	12 000	19 000	1	1	15	0,366	**B71916-C-T-P4S**
	110	16	33,5	24	2 550	11 000	17 000	1	1	25	0,366	**B71916-E-T-P4S**
	110	16	36	24,3	1 960	17 000	26 000	1	1	15	0,309	**HCB71916-C-T-P4S**
	110	16	34	23	1 850	15 000	24 000	1	1	25	0,31	**HCB71916-E-T-P4S**
	110	16	20,3	15,5	1 640	17 000	26 000	1	1	15	0,379	**HS71916-C-T-P4S**
	110	16	19,2	14,6	1 550	15 000	24 000	1	1	25	0,379	**HS71916-E-T-P4S**
	110	16	19,2	14	1 130	19 000	30 000	1	1	25	0,355	**HC71916-E-T-P4S**
	110	16	28	17,3	1 830	17 400	26 400	1	0,6	17	0,33	**M71916-C-T-P4S-XL**
	110	16	26,5	16,5	1 750	16 400	24 300	1	0,6	25	0,33	**M71916-E-T-P4S-XL**
	110	16	28	16,6	1 330	21 600	31 600	1	0,6	17	0,28	**HCM71916-C-T-P4S-XL**
	110	16	27	15,8	1 270	20 600	29 500	1	0,6	25	0,28	**HCM71916-E-T-P4S-XL**
	110	16	67	23,2	1 180	22 200	34 800	1	0,6	17	0,28	**VCM71916-C-T-P4S-XL**
	110	16	64	22,1	1 130	21 100	31 600	1	0,6	25	0,28	**VCM71916-E-T-P4S-XL**

medias *https://www.schaeffler.de/std/1F9A*

1) The limiting speeds are based on elastically preloaded single bearings.

2) Explanation of designations SP 1.

3) The bearings are also available with gap seals (type HSS, HCS, XCS or suffix 2RSD). Ordering examples: B7000-C-2RSD-T-P4S-UL and HSS7000-E-T-P4S-UL.

4) L = light preload; M = moderate preload; H = high preload.

5) Minimal quantity oil lubrication.

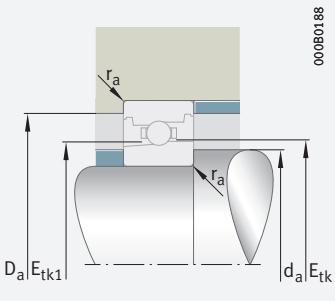

Mounting dimensions

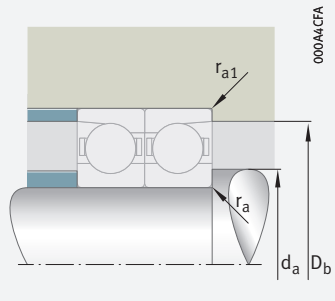

Mounting dimensions

	Mounting dimensions							Preload force[4] F_V			Lift-off force[4] K_{aE}			Axial rigidity[4] c_a		
d	d_a h12	D_a H12	r_a max.	r_{a1} max.	E_{tk} min.	E_{tk1} min.	E_{tk} E_{tk1} max.	L N	M N	H N	L N	M N	H N	L N/µm	M N/µm	H N/µm
75	82	107	1	0,6	90,2	87,3	92,4	89	266	533	265	835	1 737	53,7	84,3	115
	82	107	1	0,6	90,2	87,3	92,4	144	431	863	415	1 268	2 587	135	200	261
	82	107	1	0,6	90,2	87,3	92,4	99	298	597	285	868	1 761	134	197	255
	82	107	1,1	0,6	89,3	85,7	92,1	182	483	1 017	536	1 467	3 214	71	105	143
	82	107	1,1	0,6	89,3	85,7	92,1	261	685	1 429	752	2 002	4 254	143	203	268
	82	107	1	0,6	89,3	85,7	92,1	128	338	709	373	1 006	2 173	71	102	137
	82	107	1	0,6	89,3	85,7	92,1	184	483	1 003	528	1 396	2 943	144	202	263
	82	107	1	0,6	89,3	85,7	92,1	115	303	635	334	898	1 932	70	101	135
	82	107	1	0,6	89,3	85,7	92,1	166	433	900	474	1 251	2 632	143	200	261
	85	120	1,5	0,6	93	93	98,5	413	1 314	2 617	1 278	4 401	9 371	87,2	148	210
	85	120	1,5	0,6	93	93	98,5	615	2 091	4 345	1 794	6 306	13 546	204	325	439
	85	120	1,5	0,6	93	93	98,5	219	740	1 524	653	2 341	5 087	75,4	125	175
	85	120	1,5	0,6	93	93	98,5	308	1 149	2 459	887	3 383	7 409	180	290	388
80	86	104	0,6	0,3	89,3	89,3	92,2	174	591	1 206	532	1 954	4 257	69,9	121	173
	86	104	0,6	0,3	89,3	89,3	92,2	237	908	1 955	686	2 718	6 043	160	265	362
	86	104	0,6	0,3	89,3	89,3	92,2	84	321	686	249	1 004	2 259	58,8	101	143
	86	104	0,6	0,3	89,3	89,3	92,2	95	459	1 049	273	1 344	3 137	132	230	315
	86	104	0,6	0,3	91	88,5	92,5	71	213	426	212	666	1 385	52,3	81,9	112
	86	104	0,6	0,3	91	88,5	92,5	113	338	676	325	992	2 023	130	194	252
	86	104	0,6	0,3	91	88,5	92,5	79	236	473	226	686	1 392	130	192	248
	86	104	0,6	0,3	89,3	85,7	92,1	182	483	1 017	536	1 467	3 214	71	105	143
	86	104	0,6	0,3	89,3	85,7	92,1	261	685	1 429	752	2 002	4 254	143	203	268
	86	104	0,6	0,3	89,3	85,7	92,1	128	338	709	373	1 006	2 173	71	102	137
	86	104	0,6	0,3	89,3	85,7	92,1	184	483	1 003	528	1 396	2 943	144	202	263
	86	104	0,6	0,3	89,3	85,7	92,1	115	303	635	334	898	1 932	70	101	135
	86	104	0,6	0,3	89,3	85,7	92,1	166	433	900	474	1 251	2 632	143	200	261

Super precision angular contact ball bearings

Steel or ceramic balls
Steel or Vacrodur rings
Open or sealed

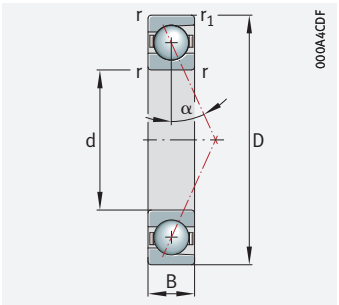

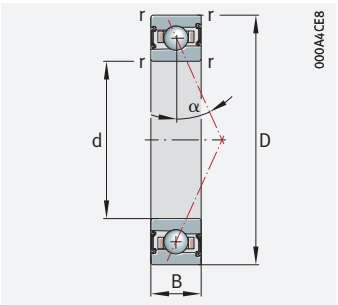

d = 80 – 85 mm

Main dimensions			Basic load ratings		Fatigue limit load	Limiting speeds[1]		Dimensions		Contact angle	Mass	Designation[2] [3]
d	D	B	dyn. C_r	stat. C_{0r}	C_{ur}	n_G grease	n_G oil[5]	r	r_1	α	m	X-life ➤ *1144*
			kN	kN	N	min^{-1}	min^{-1}	min.	min.	°	≈ kg	
80	125	22	64	41	4 300	11 000	17 000	1,1	1,1	15	0,84	**B7016-C-T-P4S**
	125	22	61	39	4 050	10 000	15 000	1,1	1,1	25	0,84	**B7016-E-T-P4S**
	125	22	65	39	3 100	15 000	24 000	1,1	1,1	15	0,7	**HCB7016-C-T-P4S**
	125	22	61	37,5	2 950	14 000	22 000	1,1	1,1	25	0,7	**HCB7016-E-T-P4S**
	125	22	30,5	21,8	2 280	15 000	24 000	1,1	1,1	15	0,927	**HS7016-C-T-P4S**
	125	22	28,5	20,6	2 160	14 000	22 000	1,1	1,1	25	0,925	**HS7016-E-T-P4S**
	125	22	28,5	19,7	1 570	18 000	28 000	1,1	1,1	25	0,87	**HC7016-E-T-P4S**
	125	22	34	22,8	2 380	16 100	24 400	1,1	0,6	17	0,87	**M7016-C-T-P4S-XL**
	125	22	32,5	21,7	2 270	15 200	22 500	1,1	0,6	25	0,87	**M7016-E-T-P4S-XL**
	125	22	34	21,8	1 730	20 000	29 300	1,1	0,6	17	0,81	**HCM7016-C-T-P4S-XL**
	125	22	32,5	20,8	1 660	19 100	27 400	1,1	0,6	25	0,81	**HCM7016-E-T-P4S-XL**
	125	22	82	30,5	1 540	20 500	31 900	1,1	0,6	17	0,81	**VCM7016-C-T-P4S-XL**
	125	22	78	29	1 470	19 600	29 300	1,1	0,6	25	0,81	**VCM7016-E-T-P4S-XL**
	140	26	94	55	5 500	10 000	17 000	2	2	15	1,43	**B7216-C-T-P4S**
	140	26	89	52	5 300	9 000	15 000	2	2	25	1,42	**B7216-E-T-P4S**
	140	26	94	52	4 000	12 000	19 000	2	2	15	1,18	**HCB7216-C-T-P4S**
	140	26	89	50	3 850	11 000	18 000	2	2	25	1,18	**HCB7216-E-T-P4S**
85	120	18	47	33,5	3 500	11 000	17 000	1,1	1,1	15	0,53	**B71917-C-T-P4S**
	120	18	44,5	31,5	3 300	10 000	15 000	1,1	1,1	25	0,53	**B71917-E-T-P4S**
	120	18	47	32	2 550	15 000	24 000	1,1	1,1	15	0,44	**HCB71917-C-T-P4S**
	120	18	44,5	30	2 410	14 000	22 000	1,1	1,1	25	0,44	**HCB71917-E-T-P4S**
	120	18	21,2	17	1 770	15 000	24 000	1,1	1,1	15	0,572	**HS71917-C-T-P4S**
	120	18	20	16	1 670	14 000	22 000	1,1	1,1	25	0,571	**HS71917-E-T-P4S**
	120	18	20	15,3	1 220	18 000	28 000	1,1	1,1	25	0,545	**HC71917-E-T-P4S**
	120	18	31,5	19,3	2 020	16 100	24 400	1,1	0,6	17	0,49	**M71917-C-T-P4S-XL**
	120	18	30	18,4	1 930	15 200	22 500	1,1	0,6	25	0,49	**M71917-E-T-P4S-XL**

medias *https://www.schaeffler.de/std/1F9A*

[1] The limiting speeds are based on elastically preloaded single bearings.

[2] Explanation of designations SP 1.

[3] The bearings are also available with gap seals (type HSS, HCS, XCS or suffix 2RSD). Ordering examples: B7000-C-2RSD-T-P4S-UL and HSS7000-E-T-P4S-UL.

[4] L = light preload; M = moderate preload; H = high preload.

[5] Minimal quantity oil lubrication.

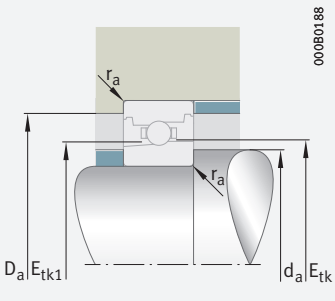

Mounting dimensions

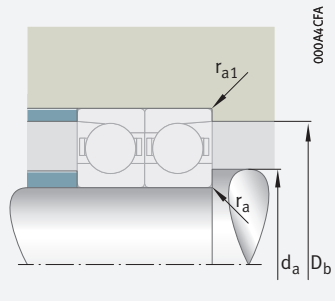

Mounting dimensions

	Mounting dimensions							Preload force[4] F_V			Lift-off force[4] K_{aE}			Axial rigidity[4] c_a		
d	d_a h12	D_a H12	r_a max.	r_{a1} max.	E_{tk} min.	E_{tk1} min.	E_{tk} E_{tk1} max.	L N	M N	H N	L N	M N	H N	L N/µm	M N/µm	H N/µm
80	88	117	1	0,6	94	94	98,8	354	1 138	2 277	1 091	3 797	8 119	85,7	145	207
	88	117	1	0,6	94	94	98,8	525	1 816	3 796	1 528	5 469	11 813	201	321	435
	88	117	1	0,6	94	94	98,8	186	640	1 327	554	2 020	4 415	74	123	173
	88	117	1	0,6	94	94	98,8	252	977	2 113	726	2 872	6 354	175	284	383
	88	117	1	0,6	97,3	94	99,7	106	317	633	315	991	2 063	58,7	92	126
	88	117	1	0,6	97,3	94	99,7	173	518	1 035	497	1 521	3 103	148	220	286
	88	117	1	0,6	97,3	94	99,7	117	352	704	336	1 023	2 075	146	215	278
	88	117	1,1	0,6	96,3	92,4	99,6	241	640	1 353	715	1 977	4 374	83	122	170
	88	117	1,1	0,6	96,3	92,4	99,6	345	907	1 895	996	2 668	5 705	164	234	311
	88	117	1	0,6	96,3	92,4	99,6	169	447	941	495	1 348	2 936	81	118	161
	88	117	1	0,6	96,3	92,4	99,6	243	638	1 328	698	1 855	3 929	164	231	304
	88	117	1	0,6	96,3	92,4	99,6	152	401	842	443	1 200	2 604	81	117	158
	88	117	1	0,6	96,3	92,4	99,6	218	572	1 191	627	1 661	3 509	163	230	301
	91	129	2	1	100,5	100,5	105,3	549	1 721	3 412	1 701	5 781	12 250	94,1	159	226
	91	129	2	1	100,5	100,5	105,3	833	2 764	5 699	2 433	8 347	17 799	221	349	472
	91	129	2	1	100,5	100,5	105,3	293	968	1 979	876	3 068	6 618	81,5	134	187
	91	129	2	1	100,5	100,5	105,3	428	1 527	3 225	1 232	4 498	9 728	196	312	416
85	92	114	0,6	0,6	95,9	95,9	99,3	237	788	1 597	726	2 609	5 644	79,7	136	195
	92	114	0,6	0,6	95,9	95,9	99,3	333	1 226	2 609	968	3 675	8 074	184	301	409
	92	114	0,6	0,6	95,9	95,9	99,3	117	428	906	346	1 341	2 985	67,4	114	161
	92	114	0,6	0,6	95,9	95,9	99,3	143	627	1 403	409	1 837	4 197	154	262	356
	92	114	0,6	0,6	98,5	96	99,9	74	221	442	220	689	1 433	55,9	87,4	119
	92	114	0,6	0,6	98,5	96	99,9	117	352	704	338	1 032	2 102	140	208	270
	92	114	0,6	0,6	98,5	96	99,9	82	247	493	236	716	1 452	140	206	265
	92	114	0,6	0,6	96,3	92,4	99,5	203	537	1 131	596	1 630	3 569	74	108	148
	92	114	0,6	0,6	96,3	92,4	99,5	291	764	1 592	838	2 230	4 737	149	210	277

Super precision angular contact ball bearings

Steel or ceramic balls
Steel or Vacrodur rings
Open or sealed

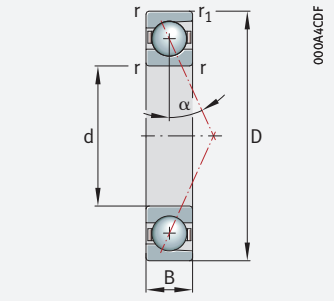

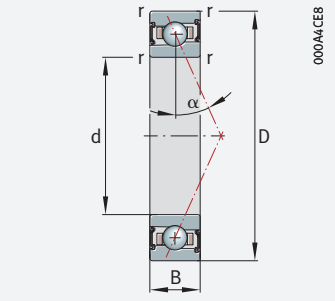

d = 85 – 90 mm

Main dimensions			Basic load ratings		Fatigue limit load	Limiting speeds[1]		Dimensions		Contact angle	Mass	Designation[2) 3)]
d	D	B	dyn. C_r	stat. C_{0r}	C_{ur}	n_G grease	n_G oil[5)]	r	r_1	α	m	X-life ➤ *1144*
			kN	kN	N	min^{-1}	min^{-1}	min.	min.	°	≈ kg	
85	120	18	31,5	18,5	1 470	20 000	29 300	1,1	0,6	17	0,43	**HCM71917-C-T-P4S-XL**
	120	18	30	17,6	1 400	19 100	27 400	1,1	0,6	25	0,43	**HCM71917-E-T-P4S-XL**
	120	18	75	26	1 300	20 500	32 200	1,1	0,6	17	0,43	**VCM71917-C-T-P4S-XL**
	120	18	72	24,7	1 240	19 600	29 300	1,1	0,6	25	0,43	**VCM71917-E-T-P4S-XL**
	130	22	66	43,5	4 450	11 000	16 000	1,1	1,1	15	0,88	**B7017-C-T-P4S**
	130	22	63	41,5	4 200	9 500	15 000	1,1	1,1	25	0,88	**B7017-E-T-P4S**
	130	22	67	41,5	3 250	15 000	22 000	1,1	1,1	15	0,74	**HCB7017-C-T-P4S**
	130	22	63	39,5	3 100	13 000	20 000	1,1	1,1	25	0,74	**HCB7017-E-T-P4S**
	130	22	30,5	22,7	2 320	15 000	22 000	1,1	1,1	15	0,97	**HS7017-C-T-P4S**
	130	22	29	21,4	2 190	13 000	20 000	1,1	1,1	25	0,969	**HS7017-E-T-P4S**
	130	22	29	20,5	1 590	17 000	26 000	1,1	1,1	25	0,913	**HC7017-E-T-P4S**
	130	22	35,5	24,8	2 550	15 400	23 300	1,1	0,6	17	0,92	**M7017-C-T-P4S-XL**
	130	22	33,5	23,7	2 420	14 500	21 400	1,1	0,6	25	0,92	**M7017-E-T-P4S-XL**
	130	22	35,5	23,8	1 850	19 100	28 000	1,1	0,6	17	0,85	**HCM7017-C-T-P4S-XL**
	130	22	34	22,7	1 760	18 200	26 100	1,1	0,6	25	0,85	**HCM7017-E-T-P4S-XL**
	130	22	85	33,5	1 640	19 600	29 100	1,1	0,6	17	0,85	**VCM7017-C-T-P4S-XL**
	130	22	81	32	1 560	18 700	28 000	1,1	0,6	25	0,85	**VCM7017-E-T-P4S-XL**
	150	28	97	59	5 800	9 000	15 000	2	2	15	1,82	**B7217-C-T-P4S**
	150	28	93	57	5 500	8 000	13 000	2	2	25	1,81	**B7217-E-T-P4S**
	150	28	98	57	4 200	11 000	18 000	2	2	15	1,55	**HCB7217-C-T-P4S**
	150	28	93	54	4 000	10 000	17 000	2	2	25	1,55	**HCB7217-E-T-P4S**
90	125	18	48	35	3 550	11 000	16 000	1,1	1,1	15	0,55	**B71918-C-T-P4S**
	125	18	45	33	3 400	9 500	15 000	1,1	1,1	25	0,55	**B71918-E-T-P4S**
	125	18	48	33,5	2 600	15 000	22 000	1,1	1,1	15	0,461	**HCB71918-C-T-P4S**
	125	18	45,5	31,5	2 470	13 000	20 000	1,1	1,1	25	0,462	**HCB71918-E-T-P4S**

medias *https://www.schaeffler.de/std/1F9A*

1) The limiting speeds are based on elastically preloaded single bearings.

2) Explanation of designations SP 1.

3) The series 719 and 70 are also available with gap seals (type HSS, HCS, XCS or suffix 2RSD). Ordering examples: B7000-C-2RSD-T-P4S-UL and HSS7000-E-T-P4S-UL.

4) L = light preload; M = moderate preload; H = high preload.

5) Minimal quantity oil lubrication.

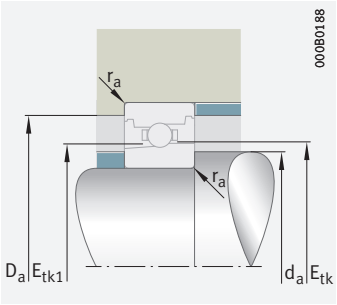

Mounting dimensions

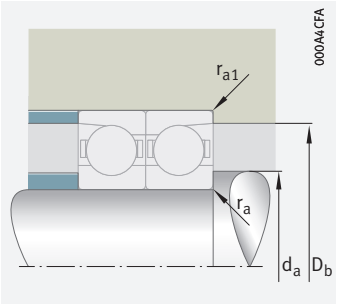

Mounting dimensions

d	Mounting dimensions							Preload force[4] F_V			Lift-off force[4] K_{aE}			Axial rigidity[4] c_a		
	d_a h12	D_a H12	r_a max.	r_{a1} max.	E_{tk} min.	E_{tk1} min.	E_{tk} E_{tk1} max.	L N	M N	H N	L N	M N	H N	L N/µm	M N/µm	H N/µm
85	92	114	0,6	0,6	96,3	92,4	99,5	142	376	788	414	1 118	2 414	73	105	142
	92	114	0,6	0,6	96,3	92,4	99,5	205	538	1 118	588	1 556	3 278	149	209	273
	92	114	0,6	0,6	96,3	92,4	99,5	128	337	706	371	998	2 146	73	104	139
	92	114	0,6	0,6	96,3	92,4	99,5	185	483	1 003	528	1 394	2 932	148	208	270
	93	122	1	0,6	99	99	103,8	367	1 183	2 368	1 132	3 942	8 434	89,7	152	217
	93	122	1	0,6	99	99	103,8	540	1 874	3 919	1 573	5 639	12 184	209	336	454
	93	122	1	0,6	99	99	103,8	189	653	1 356	562	2 058	4 501	76,9	128	179
	93	122	1	0,6	99	99	103,8	256	997	2 159	736	2 927	6 484	181	296	398
	93	122	1	0,6	102,3	99	104,7	107	322	643	320	1 006	2 093	60,3	94,4	129
	93	122	1	0,6	102,3	99	104,7	173	518	1 035	497	1 520	3 099	151	224	292
	93	122	1	0,6	102,3	99	104,7	120	359	718	343	1 042	2 115	150	221	286
	93	122	1	0,6	101,3	97,4	104,5	262	698	1 476	780	2 157	4 772	90	133	185
	93	122	1	0,6	101,3	97,4	104,5	376	988	2 066	1 086	2 909	6 220	178	254	337
	93	122	1	0,6	101,3	97,4	104,5	184	488	1 026	540	1 470	3 203	88	128	175
	93	122	1	0,6	101,3	97,4	104,5	265	695	1 448	761	2 022	4 283	178	251	330
	93	122	1	0,6	101,3	97,4	104,5	165	437	918	483	1 309	2 841	88	127	171
	93	122	1	0,6	101,3	97,4	104,5	238	624	1 298	683	1 811	3 826	177	249	327
	98	138	2	1	106,6	106,6	113,2	568	1 786	3 544	1 759	5 983	12 688	99,1	167	238
	98	138	2	1	106,6	106,6	113,2	864	2 869	5 921	2 520	8 657	18 466	233	369	497
	98	138	2	1	106,6	106,6	113,2	306	1 012	2 071	915	3 205	6 915	86,2	142	198
	98	138	2	1	106,6	106,6	113,2	438	1 572	3 325	1 262	4 626	10 015	206	328	438
90	97	119	0,6	0,6	100,9	100,9	104,3	238	796	1 615	729	2 628	5 691	81,8	140	200
	97	119	0,6	0,6	100,9	100,9	104,3	334	1 236	2 634	970	3 701	8 140	189	309	420
	97	119	0,6	0,6	100,9	100,9	104,3	118	434	919	349	1 357	3 023	69,4	118	165
	97	119	0,6	0,6	100,9	100,9	104,3	147	648	1 450	421	1 897	4 337	160	272	369

Super precision angular contact ball bearings

Steel or ceramic balls
Steel or Vacrodur rings
Open or sealed

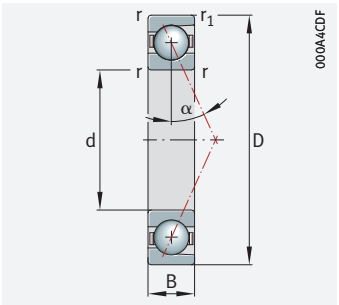

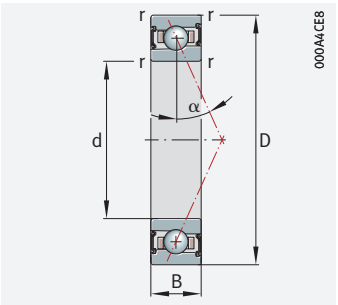

d = 90 – 90 mm

Main dimensions			Basic load ratings		Fatigue limit load	Limiting speeds[1]		Dimensions		Contact angle	Mass	Designation[2] [3]
d	D	B	dyn. C_r	stat. C_{0r}	C_{ur}	n_G grease	n_G oil[5]	r	r_1	α	m	X-life ➤ 1144
			kN	kN	N	min^{-1}	min^{-1}	min.	min.	°	≈ kg	
90	125	18	23,2	18,7	1 910	15 000	22 000	1,1	1,1	15	0,58	**HS71918-C-T-P4S**
	125	18	21,9	17,7	1 810	13 000	20 000	1,1	1,1	25	0,579	**HS71918-E-T-P4S**
	125	18	22	16,9	1 310	17 000	26 000	1,1	1,1	25	0,564	**HC71918-E-T-P4S**
	125	18	33	21	2 150	15 400	23 300	1,1	0,6	17	0,52	**M71918-C-T-P4S-XL**
	125	18	31	20,1	2 050	14 500	21 400	1,1	0,6	25	0,52	**M71918-E-T-P4S-XL**
	125	18	33	20,1	1 560	19 100	28 000	1,1	0,6	17	0,45	**HCM71918-C-T-P4S-XL**
	125	18	31,5	19,2	1 490	18 200	26 100	1,1	0,6	25	0,45	**HCM71918-E-T-P4S-XL**
	125	18	79	28	1 390	19 600	30 600	1,1	0,6	17	0,45	**VCM71918-C-T-P4S-XL**
	125	18	75	27	1 320	18 700	28 000	1,1	0,6	25	0,45	**VCM71918-E-T-P4S-XL**
	140	24	78	51	5 000	10 000	15 000	1,5	1,5	15	1,14	**B7018-C-T-P4S**
	140	24	74	48,5	4 800	9 000	14 000	1,5	1,5	25	1,14	**B7018-E-T-P4S**
	140	24	78	49	3 700	14 000	22 000	1,5	1,5	15	0,95	**HCB7018-C-T-P4S**
	140	24	74	46,5	3 500	12 000	19 000	1,5	1,5	25	0,95	**HCB7018-E-T-P4S**
	140	24	36	26,5	2 600	14 000	22 000	1,5	1,5	15	1,27	**HS7018-C-T-P4S**
	140	24	34	25	2 480	12 000	19 000	1,5	1,5	25	1,27	**HS7018-E-T-P4S**
	140	24	34	24	1 810	16 000	24 000	1,5	1,5	25	1,19	**HC7018-E-T-P4S**
	140	24	39,5	27,5	2 700	14 400	21 800	1,5	1	17	1,2	**M7018-C-T-P4S-XL**
	140	24	37,5	26	2 600	13 500	20 000	1,5	1	25	1,2	**M7018-E-T-P4S-XL**
	140	24	39,5	26,5	1 980	17 900	26 100	1,5	1	17	1,1	**HCM7018-C-T-P4S-XL**
	140	24	37,5	25	1 890	17 000	24 400	1,5	1	25	1,1	**HCM7018-E-T-P4S-XL**
	140	24	95	37	1 750	18 300	27 600	1,5	1	17	1,1	**VCM7018-C-T-P4S-XL**
	140	24	90	35	1 670	17 400	26 100	1,5	1	25	1,1	**VCM7018-E-T-P4S-XL**
	160	30	125	75	7 100	8 500	14 000	2	2	15	2,2	**B7218-C-T-P4S**
	160	30	119	72	6 800	7 500	12 000	2	2	25	2,19	**B7218-E-T-P4S**
	160	30	125	72	5 200	11 000	18 000	2	2	15	1,8	**HCB7218-C-T-P4S**
	160	30	119	69	4 950	9 000	15 000	2	2	25	1,79	**HCB7218-E-T-P4S**

medias *https://www.schaeffler.de/std/1F9A*

1) The limiting speeds are based on elastically preloaded single bearings.

2) Explanation of designations SP 1.

3) The series 719 and 70 are also available with gap seals (type HSS, HCS, XCS or suffix 2RSD). Ordering examples: B7000-C-2RSD-T-P4S-UL and HSS7000-E-T-P4S-UL.

4) L = light preload; M = moderate preload; H = high preload.

5) Minimal quantity oil lubrication.

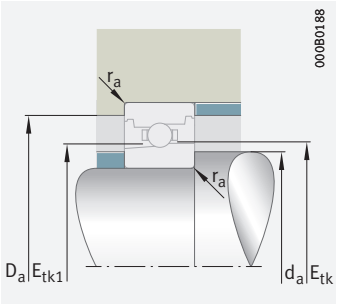

Mounting dimensions

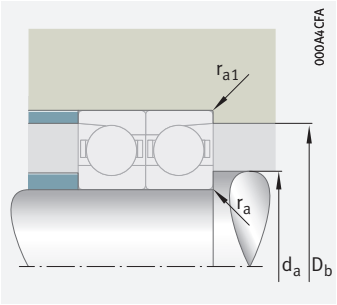

Mounting dimensions

d	Mounting dimensions							Preload force[4] F_V			Lift-off force[4] K_{aE}			Axial rigidity[4] c_a		
	d_a h12	D_a H12	r_a max.	r_{a1} max.	E_{tk} min.	E_{tk1} min.	E_{tk} E_{tk1} max.	L N	M N	H N	L N	M N	H N	L N/µm	M N/µm	H N/µm
90	97	119	0,6	0,6	103,2	100,6	104,8	79	237	474	235	739	1 536	57,2	89,4	122
	97	119	0,6	0,6	103,2	100,6	104,8	129	386	773	371	1 133	2 309	144	214	279
	97	119	0,6	0,6	103,2	100,6	104,8	90	269	538	257	781	1 584	144	212	273
	97	119	0,6	0,6	101,3	97,4	104,4	221	585	1 233	650	1 778	3 894	80	117	161
	97	119	0,6	0,6	101,3	97,4	104,4	317	832	1 736	913	2 431	5 164	161	228	301
	97	119	0,6	0,6	101,3	97,4	104,4	155	410	859	452	1 220	2 633	80	114	154
	97	119	0,6	0,6	101,3	97,4	104,4	224	586	1 219	641	1 696	3 574	162	227	296
	97	119	0,6	0,6	101,3	97,4	104,4	139	367	769	405	1 089	2 341	79	113	151
	97	119	0,6	0,6	101,3	97,4	104,4	201	526	1 093	575	1 520	3 196	161	225	294
	100	131	1,5	0,6	105,5	105,5	110,9	437	1 395	2 785	1 347	4 651	9 920	95,2	161	229
	100	131	1,5	0,6	105,5	105,5	110,9	646	2 205	4 590	1 880	6 636	14 269	223	355	479
	100	131	1,5	0,6	105,5	105,5	110,9	230	781	1 613	685	2 464	5 361	82,3	136	191
	100	131	1,5	0,6	105,5	105,5	110,9	319	1 201	2 577	916	3 528	7 745	195	316	423
	100	131	1,5	0,6	109,3	105,7	111,9	126	377	754	375	1 178	2 451	65,4	102	140
	100	131	1,5	0,6	109,3	105,7	111,9	204	612	1 225	588	1 799	3 667	164	244	318
	100	131	1,5	0,6	109,3	105,7	111,9	141	423	845	404	1 228	2 490	163	241	310
	100	131	1,5	0,6	108,3	104,1	111,7	291	775	1 639	866	2 395	5 299	93	137	191
	100	131	1,5	0,6	108,3	104,1	111,7	418	1 098	2 295	1 207	3 232	6 910	184	262	349
	100	131	1,5	0,6	108,3	104,1	111,7	205	542	1 140	599	1 632	3 557	91	133	181
	100	131	1,5	0,6	108,3	104,1	111,7	295	772	1 608	846	2 247	4 759	184	260	341
	100	131	1,5	0,6	108,3	104,1	111,7	184	485	1 020	536	1 454	3 155	91	131	177
	100	131	1,5	0,6	108,3	104,1	111,7	265	693	1 443	759	2 012	4 250	183	258	338
	104	147	2	1	112,1	112,1	120	732	2 280	4 513	2 267	7 640	16 156	109	183	260
	104	147	2	1	112,1	112,1	120	1 127	3 689	7 575	3 291	11 132	23 627	257	404	545
	104	147	2	1	112,1	112,1	120	400	1 303	2 655	1 197	4 129	8 866	95,2	156	217
	104	147	2	1	112,1	112,1	120	586	2 042	4 283	1 688	6 013	12 905	230	361	481

Super precision angular contact ball bearings

Steel or ceramic balls
Steel or Vacrodur rings
Open or sealed

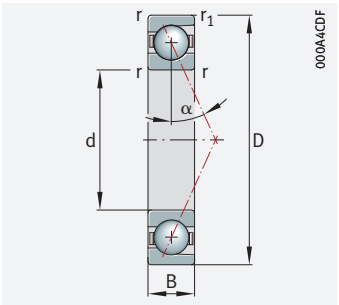

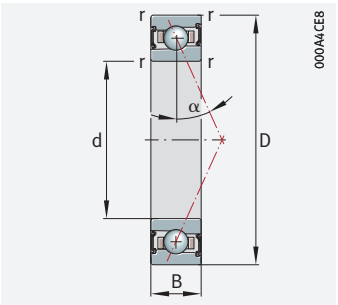

d = 95 – 95 mm

Main dimensions			Basic load ratings		Fatigue limit load	Limiting speeds[1]		Dimensions		Contact angle	Mass	Designation[2] [3]
d	D	B	dyn. C_r	stat. C_{0r}	C_{ur}	n_G grease	n_G oil[5]	r	r_1	α	m	X-life ➤ 1144
			kN	kN	N	min^{-1}	min^{-1}	min.	min.	°	≈ kg	
95	130	18	48,5	36,5	3 650	10 000	16 000	1,1	1,1	15	0,58	**B71919-C-T-P4S**
	130	18	46	34,5	3 450	9 000	14 000	1,1	1,1	25	0,58	**B71919-E-T-P4S**
	130	18	49	35	2 650	14 000	22 000	1,1	1,1	15	0,482	**HCB71919-C-T-P4S**
	130	18	46	33	2 500	13 000	19 000	1,1	1,1	25	0,483	**HCB71919-E-T-P4S**
	130	18	23,9	19,9	1 980	14 000	22 000	1,1	1,1	15	0,606	**HS71919-C-T-P4S**
	130	18	22,5	18,7	1 870	13 000	19 000	1,1	1,1	25	0,605	**HS71919-E-T-P4S**
	130	18	22,5	17,9	1 360	16 000	24 000	1,1	1,1	25	0,59	**HC71919-E-T-P4S**
	130	18	33,5	22	2 190	14 700	22 300	1,1	0,6	17	0,54	**M71919-C-T-P4S-XL**
	130	18	31,5	21	2 090	13 800	20 500	1,1	0,6	25	0,54	**M71919-E-T-P4S-XL**
	130	18	33,5	21	1 600	18 300	26 700	1,1	0,6	17	0,47	**HCM71919-C-T-P4S-XL**
	130	18	32	20,1	1 520	17 400	24 900	1,1	0,6	25	0,47	**HCM71919-E-T-P4S-XL**
	130	18	80	29,5	1 420	18 700	28 100	1,1	0,6	17	0,47	**VCM71919-C-T-P4S-XL**
	130	18	76	28	1 350	17 800	26 700	1,1	0,6	25	0,47	**VCM71919-E-T-P4S-XL**
	145	24	81	54	5 200	9 500	15 000	1,5	1,5	15	1,19	**B7019-C-T-P4S**
	145	24	77	52	5 000	8 500	13 000	1,5	1,5	25	1,19	**B7019-E-T-P4S**
	145	24	81	52	3 800	13 000	20 000	1,5	1,5	15	1	**HCB7019-C-T-P4S**
	145	24	77	49,5	3 650	12 000	18 000	1,5	1,5	25	1	**HCB7019-E-T-P4S**
	145	24	36,5	27,5	2 650	13 000	20 000	1,5	1,5	15	1,32	**HS7019-C-T-P4S**
	145	24	34	26	2 500	12 000	18 000	1,5	1,5	25	1,32	**HS7019-E-T-P4S**
	145	24	34,5	25	1 840	15 000	24 000	1,5	1,5	25	1,24	**HC7019-E-T-P4S**
	145	24	42	31	3 000	13 800	20 900	1,5	1	17	1,3	**M7019-C-T-P4S-XL**
	145	24	40	29,5	2 850	13 000	19 200	1,5	1	25	1,3	**M7019-E-T-P4S-XL**
	145	24	42	29,5	2 180	17 100	25 000	1,5	1	17	1,2	**HCM7019-C-T-P4S-XL**
	145	24	40	28,5	2 080	16 300	23 400	1,5	1	25	1,2	**HCM7019-E-T-P4S-XL**
	145	24	101	41,5	1 930	17 500	25 400	1,5	1	17	1,2	**VCM7019-C-T-P4S-XL**
	145	24	97	39,5	1 840	16 700	25 000	1,5	1	25	1,2	**VCM7019-E-T-P4S-XL**

medias *https://www.schaeffler.de/std/1F9A*

[1] The limiting speeds are based on elastically preloaded single bearings.

[2] Explanation of designations SP 1.

[3] The series 719 and 70 are also available with gap seals (type HSS, HCS, XCS or suffix 2RSD). Ordering examples: B7000-C-2RSD-T-P4S-UL and HSS7000-E-T-P4S-UL.

[4] L = light preload; M = moderate preload; H = high preload.

[5] Minimal quantity oil lubrication.

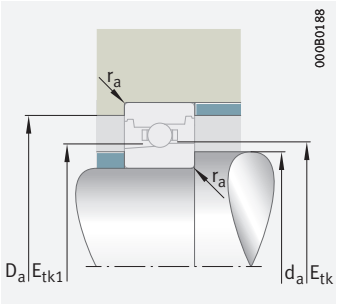

Mounting dimensions

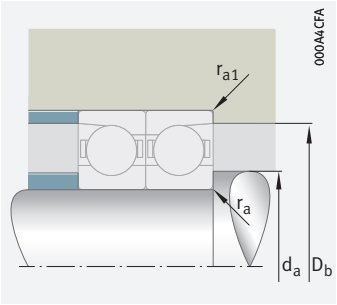

Mounting dimensions

	Mounting dimensions							Preload force[4] F_V			Lift-off force[4] K_{aE}			Axial rigidity[4] c_a		
d	d_a h12	D_a H12	r_a max.	r_{a1} max.	E_{tk} min.	E_{tk1} min.	$\frac{E_{tk}}{E_{tk1}}$ max.	L N	M N	H N	L N	M N	H N	L N/µm	M N/µm	H N/µm
95	102	124	0,6	0,6	105,9	105,9	109,2	243	813	1 651	743	2 679	5 806	84,4	144	206
	102	124	0,6	0,6	105,9	105,9	109,2	341	1 262	2 693	988	3 777	8 313	196	319	434
	102	124	0,6	0,6	105,9	105,9	109,2	119	440	932	352	1 373	3 061	71,3	121	170
	102	124	0,6	0,6	105,9	105,9	109,2	148	656	1 470	423	1 918	4 393	164	280	380
	102	124	0,6	0,6	108,2	105,6	109,7	82	246	492	244	766	1 593	60	93,7	127
	102	124	0,6	0,6	108,2	105,6	109,7	131	393	787	377	1 153	2 347	150	223	290
	102	124	0,6	0,6	108,2	105,6	109,7	92	276	552	263	801	1 623	150	221	285
	102	124	0,6	0,6	106,3	102,4	109,3	231	611	1 288	679	1 858	4 069	84	122	168
	102	124	0,6	0,6	106,3	102,4	109,3	331	869	1 812	953	2 539	5 393	168	237	313
	102	124	0,6	0,6	106,3	102,4	109,3	162	428	898	472	1 275	2 752	83	119	160
	102	124	0,6	0,6	106,3	102,4	109,3	234	612	1 272	670	1 771	3 732	168	236	308
	102	124	0,6	0,6	106,3	102,4	109,3	146	384	804	423	1 137	2 446	82	118	158
	102	124	0,6	0,6	106,3	102,4	109,3	210	550	1 142	601	1 587	3 338	167	234	305
	105	136	1,5	0,6	110,5	110,5	115,8	444	1 421	2 842	1 367	4 726	10 091	98,8	167	237
	105	136	1,5	0,6	110,5	110,5	115,8	671	2 295	4 780	1 955	6 904	14 849	233	372	502
	105	136	1,5	0,6	110,5	110,5	115,8	233	794	1 643	693	2 499	5 442	85,3	141	197
	105	136	1,5	0,6	110,5	110,5	115,8	322	1 220	2 622	924	3 581	7 871	203	328	439
	105	136	1,5	0,6	114,3	110,7	116,8	127	382	764	380	1 192	2 480	67	105	143
	105	136	1,5	0,6	114,3	110,7	116,8	204	612	1 225	588	1 797	3 663	168	249	324
	105	136	1,5	0,6	114,3	110,7	116,8	141	423	845	404	1 227	2 488	167	246	317
	105	136	1,5	0,6	113,3	109,1	116,7	328	874	1 846	975	2 699	5 972	104	154	215
	105	136	1,5	0,6	113,3	109,1	116,7	470	1 236	2 584	1 359	3 640	7 782	207	295	392
	105	136	1,5	0,6	113,3	109,1	116,7	231	610	1 284	675	1 839	4 007	102	149	203
	105	136	1,5	0,6	113,3	109,1	116,7	332	869	1 811	952	2 530	5 359	207	292	383
	105	136	1,5	0,6	113,3	109,1	116,7	207	547	1 149	604	1 638	3 555	102	147	199
	105	136	1,5	0,6	113,3	109,1	116,7	298	780	1 624	854	2 265	4 786	206	289	379

Super precision angular contact ball bearings

Steel or ceramic balls
Steel or Vacrodur rings
Open or sealed

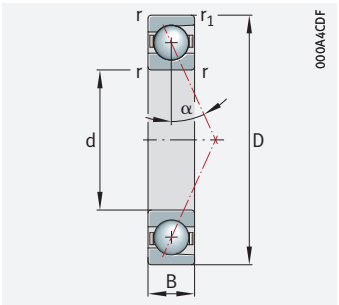

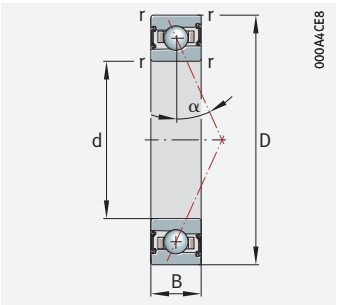

d = 95 – 100 mm

Main dimensions			Basic load ratings		Fatigue limit load	Limiting speeds[1]		Dimensions		Contact angle	Mass	Designation[2] [3]
d	D	B	dyn. C_r	stat. C_{0r}	C_{ur}	n_G grease	n_G oil[5]	r	r_1	α	m	X-life ➤ *1144*
			kN	kN	N	min^{-1}	min^{-1}	min.	min.	°	≈ kg	
95	170	32	130	81	7 500	8 000	13 000	2,1	2,1	15	2,73	**B7219-C-T-P4S**
	170	32	124	78	7 100	7 000	11 000	2,1	2,1	25	2,72	**B7219-E-T-P4S**
	170	32	130	78	5 500	10 000	17 000	2,1	2,1	15	2,3	**HCB7219-C-T-P4S**
	170	32	124	74	5 200	8 500	14 000	2,1	2,1	25	2,29	**HCB7219-E-T-P4S**
100	140	20	60	45	4 300	9 500	14 000	1,1	1,1	15	0,78	**B71920-C-T-P4S**
	140	20	57	42,5	4 100	8 500	13 000	1,1	1,1	25	0,78	**B71920-E-T-P4S**
	140	20	60	43	3 150	13 000	20 000	1,1	1,1	15	0,65	**HCB71920-C-T-P4S**
	140	20	57	40,5	3 000	12 000	18 000	1,1	1,1	25	0,65	**HCB71920-E-T-P4S**
	140	20	28,5	23,5	2 270	13 000	20 000	1,1	1,1	15	0,86	**HS71920-C-T-P4S**
	140	20	27	22,1	2 140	12 000	18 000	1,1	1,1	25	0,86	**HS71920-E-T-P4S**
	140	20	27	21,2	1 560	15 000	24 000	1,1	1,1	25	0,81	**HC71920-E-T-P4S**
	140	20	38,5	25,5	2 480	13 800	20 900	1,1	0,6	17	0,76	**M71920-C-T-P4S-XL**
	140	20	36,5	24,5	2 370	13 000	19 200	1,1	0,6	25	0,76	**M71920-E-T-P4S-XL**
	140	20	38,5	24,6	1 810	17 100	25 000	1,1	0,6	17	0,67	**HCM71920-C-T-P4S-XL**
	140	20	36,5	23,5	1 730	16 300	23 400	1,1	0,6	25	0,67	**HCM71920-E-T-P4S-XL**
	140	20	92	34,5	1 600	17 500	26 600	1,1	0,6	17	0,67	**VCM71920-C-T-P4S-XL**
	140	20	88	33	1 530	16 700	25 000	1,1	0,6	25	0,67	**VCM71920-E-T-P4S-XL**
	150	24	83	57	5 400	9 000	14 000	1,5	1,5	15	1,24	**B7020-C-T-P4S**
	150	24	79	55	5 200	8 000	13 000	1,5	1,5	25	1,24	**B7020-E-T-P4S**
	150	24	83	55	3 950	13 000	19 000	1,5	1,5	15	1,03	**HCB7020-C-T-P4S**
	150	24	79	52	3 750	11 000	17 000	1,5	1,5	25	1,03	**HCB7020-E-T-P4S**
	150	24	36,5	28,5	2 700	13 000	19 000	1,5	1,5	15	1,38	**HS7020-C-T-P4S**
	150	24	34,5	27	2 550	11 000	17 000	1,5	1,5	25	1,38	**HS7020-E-T-P4S**
	150	24	34,5	26	1 860	15 000	22 000	1,5	1,5	25	1,29	**HC7020-E-T-P4S**
	150	24	43	32	3 050	13 200	20 000	1,5	1	17	1,3	**M7020-C-T-P4S-XL**
	150	24	40,5	31	2 900	12 400	18 400	1,5	1	25	1,3	**M7020-E-T-P4S-XL**

medias *https://www.schaeffler.de/std/1F9A*

[1] The limiting speeds are based on elastically preloaded single bearings.

[2] Explanation of designations SP 1.

[3] The series 719 and 70 are also available with gap seals (type HSS, HCS, XCS or suffix 2RSD). Ordering examples: B7000-C-2RSD-T-P4S-UL and HSS7000-E-T-P4S-UL.

[4] L = light preload; M = moderate preload; H = high preload.

[5] Minimal quantity oil lubrication.

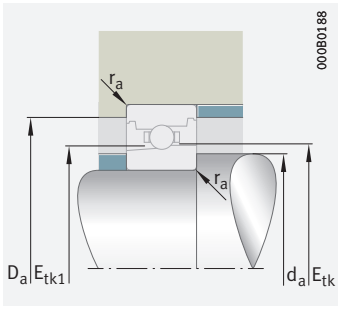

Mounting dimensions

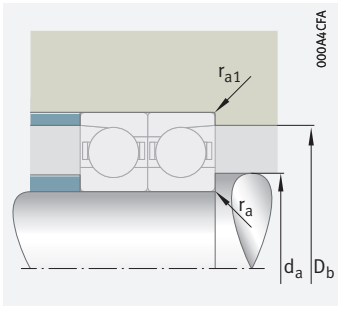

Mounting dimensions

d	Mounting dimensions							Preload force[4] F_V			Lift-off force[4] K_{aE}			Axial rigidity[4] c_a		
	d_a h12	D_a H12	r_a max.	r_{a1} max.	E_{tk} min.	E_{tk1} min.	E_{tk} E_{tk1} max.	L N	M N	H N	L N	M N	H N	L N/µm	M N/µm	H N/µm
95	110,5	154	2,1	1	119,1	119,1	126,9	760	2 373	4 703	2 353	7 935	16 792	115	193	273
	110,5	154	2,1	1	119,1	119,1	126,9	1 184	3 876	7 964	3 454	11 693	24 820	273	429	577
	110,5	154	2,1	1	119,1	119,1	126,9	413	1 348	2 748	1 234	4 261	9 153	100	164	228
	110,5	154	2,1	1	119,1	119,1	126,9	605	2 113	4 437	1 741	6 219	13 355	242	381	507
100	107	133	0,6	0,6	113,4	113,4	117,5	316	1 040	2 101	968	3 432	7 399	94,1	160	228
	107	133	0,6	0,6	113,4	113,4	117,5	450	1 616	3 417	1 305	4 839	10 556	219	353	479
	107	133	0,6	0,6	113,4	113,4	117,5	160	572	1 201	473	1 789	3 950	80,4	135	189
	107	133	0,6	0,6	113,4	113,4	117,5	204	850	1 876	584	2 489	5 611	187	311	421
	107	133	0,6	0,6	115,2	112,3	116,9	97	291	583	289	906	1 883	64,6	101	137
	107	133	0,6	0,6	115,2	112,3	116,9	158	474	949	455	1 390	2 832	163	242	314
	107	133	0,6	0,6	115,2	112,3	116,9	109	328	656	313	951	1 927	162	239	307
	107	133	0,6	0,6	113,3	109,1	116,6	269	714	1 506	793	2 172	4 759	90	132	181
	107	133	0,6	0,6	113,3	109,1	116,6	387	1 016	2 118	1 114	2 967	6 305	181	256	338
	107	133	0,6	0,6	113,3	109,1	116,6	190	500	1 049	551	1 489	3 217	89	129	173
	107	133	0,6	0,6	113,3	109,1	116,6	273	715	1 487	782	2 070	4 362	182	255	333
	107	133	0,6	0,6	113,3	109,1	116,6	170	448	939	494	1 329	2 860	89	127	170
	107	133	0,6	0,6	113,3	109,1	116,6	245	642	1 334	702	1 855	3 901	181	253	330
	110	141	1,5	0,6	115,5	115,5	120,8	464	1 484	2 970	1 427	4 935	10 539	104	175	248
	110	141	1,5	0,6	115,5	115,5	120,8	681	2 336	4 869	1 982	7 018	15 103	242	385	521
	110	141	1,5	0,6	115,5	115,5	120,8	241	823	1 703	717	2 587	5 636	89,1	148	206
	110	141	1,5	0,6	115,5	115,5	120,8	333	1 266	2 723	957	3 715	8 170	212	343	459
	110	141	1,5	0,6	119,3	115,7	121,8	127	382	764	379	1 190	2 476	68,3	107	145
	110	141	1,5	0,6	119,3	115,7	121,8	207	621	1 242	596	1 822	3 713	172	256	333
	110	141	1,5	0,6	119,3	115,7	121,8	144	431	863	412	1 252	2 539	171	253	326
	110	141	1,5	0,6	118,3	114,1	121,7	342	909	1 922	1 016	2 810	6 220	108	160	223
	110	141	1,5	0,6	118,3	114,1	121,7	489	1 287	2 690	1 414	3 788	8 101	215	306	406

Super precision angular contact ball bearings

Steel or ceramic balls
Steel or Vacrodur rings
Open or sealed

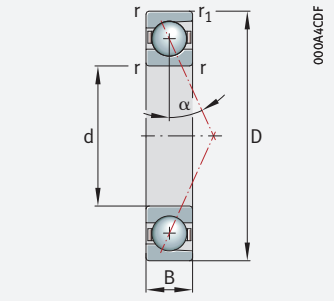

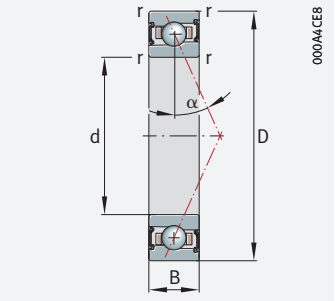

d = 100 – 105 mm

Main dimensions			Basic load ratings		Fatigue limit load	Limiting speeds[1]		Dimensions		Contact angle	Mass	Designation[2] [3]
d	D	B	dyn. C_r	stat. C_{0r}	C_{ur}	n_G grease	n_G oil[5]	r	r_1	α	m	X-life ➤ 1144
			kN	kN	N	min^{-1}	min^{-1}	min.	min.	°	≈ kg	
100	150	24	43	31	2 220	16 400	23 500	1,5	1	17	1,2	**HCM7020-C-T-P4S-XL**
	150	24	41	29,5	2 120	15 600	22 400	1,5	1	25	1,2	**HCM7020-E-T-P4S-XL**
	150	24	103	43	1 970	16 800	23 500	1,5	1	17	1,2	**VCM7020-C-T-P4S-XL**
	150	24	98	41	1 880	16 000	23 500	1,5	1	25	1,2	**VCM7020-E-T-P4S-XL**
	180	34	135	88	7 800	7 500	12 000	2,1	2,1	15	3,35	**B7220-C-T-P4S**
	180	34	129	84	7 500	6 700	10 000	2,1	2,1	25	3,34	**B7220-E-T-P4S**
	180	34	135	84	5 700	9 500	16 000	2,1	2,1	15	2,89	**HCB7220-C-T-P4S**
	180	34	129	80	5 400	8 000	13 000	2,1	2,1	25	2,88	**HCB7220-E-T-P4S**
105	145	20	60	45	4 250	9 000	14 000	1,1	1,1	15	0,81	**B71921-C-T-P4S**
	145	20	57	42,5	4 050	8 000	13 000	1,1	1,1	25	0,81	**B71921-E-T-P4S**
	145	20	60	43	3 100	13 000	19 000	1,1	1,1	15	0,69	**HCB71921-C-T-P4S**
	145	20	57	41	2 950	11 000	17 000	1,1	1,1	25	0,69	**HCB71921-E-T-P4S**
	145	20	29	24,8	2 350	13 000	19 000	1,1	1,1	15	0,89	**HS71921-C-T-P4S**
	145	20	27,5	23,4	2 220	11 000	17 000	1,1	1,1	25	0,89	**HS71921-E-T-P4S**
	145	20	27,5	22,4	1 610	15 000	22 000	1,1	1,1	25	0,83	**HC71921-E-T-P4S**
	145	20	39	27	2 550	13 200	20 000	1,1	0,6	17	0,79	**M71921-C-T-P4S-XL**
	145	20	37	25,5	2 420	12 400	18 400	1,1	0,6	25	0,79	**M71921-E-T-P4S-XL**
	145	20	39	25,5	1 850	16 400	24 000	1,1	0,6	17	0,69	**HCM71921-C-T-P4S-XL**
	145	20	37	24,4	1 760	15 600	22 400	1,1	0,6	25	0,69	**HCM71921-E-T-P4S-XL**
	145	20	94	36	1 640	16 800	24 700	1,1	0,6	17	0,69	**VCM71921-C-T-P4S-XL**
	145	20	89	34	1 560	16 000	24 000	1,1	0,6	25	0,69	**VCM71921-E-T-P4S-XL**
	160	26	85	61	5 600	8 500	13 000	2	2	15	1,6	**B7021-C-T-P4S**
	160	26	80	58	5 300	7 500	12 000	2	2	25	1,6	**B7021-E-T-P4S**
	160	26	85	58	4 100	12 000	18 000	2	2	15	1,39	**HCB7021-C-T-P4S**
	160	26	81	55	3 850	11 000	16 000	2	2	25	1,39	**HCB7021-E-T-P4S**

medias *https://www.schaeffler.de/std/1F9A*

1) The limiting speeds are based on elastically preloaded single bearings.

2) Explanation of designations SP 1.

3) The series 719 and 70 are also available with gap seals (type HSS, HCS, XCS or suffix 2RSD). Ordering examples: B7000-C-2RSD-T-P4S-UL and HSS7000-E-T-P4S-UL.

4) L = light preload; M = moderate preload; H = high preload.

5) Minimal quantity oil lubrication.

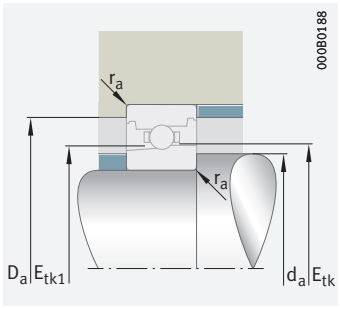

Mounting dimensions

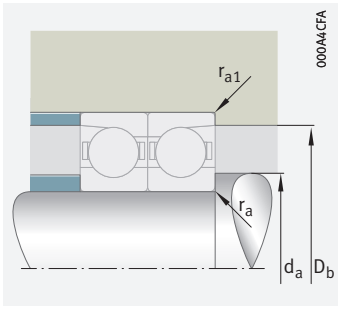

Mounting dimensions

	Mounting dimensions							Preload force[4] F_V			Lift-off force[4] K_{aE}			Axial rigidity[4] c_a		
d	d_a h12	D_a H12	r_a	r_{a1}	E_{tk}	E_{tk1}	E_{tk} E_{tk1}	L	M	H	L	M	H	L	M	H
			max.	max.	min.	min.	max.	N	N	N	N	N	N	N/µm	N/µm	N/µm
100	110	141	1,5	0,6	118,3	114,1	121,7	240	635	1 336	703	1 915	4 174	106	154	210
	110	141	1,5	0,6	118,3	114,1	121,7	345	905	1 885	991	2 633	5 578	215	302	397
	110	141	1,5	0,6	118,3	114,1	121,7	215	569	1 196	629	1 706	3 702	105	152	206
	110	141	1,5	0,6	118,3	114,1	121,7	310	812	1 691	889	2 358	4 982	213	300	393
	114,5	165,5	2,1	1	126,6	126,6	134,4	789	2 466	4 892	2 439	8 230	17 428	121	203	287
	114,5	165,5	2,1	1	126,6	126,6	134,4	1 208	3 964	8 152	3 521	11 940	25 355	285	449	604
	114,5	165,5	2,1	1	126,6	126,6	134,4	428	1 400	2 856	1 279	4 420	9 498	106	172	240
	114,5	165,5	2,1	1	126,6	126,6	134,4	627	2 198	4 619	1 806	6 466	13 894	255	402	535
105	112	138	0,6	0,6	117,4	117,4	121,4	316	1 040	2 101	968	3 432	7 399	94,1	160	228
	112	138	0,6	0,6	117,4	117,4	121,4	450	1 616	3 417	1 305	4 839	10 556	219	353	479
	112	138	0,6	0,6	117,4	117,4	121,4	157	564	1 185	466	1 763	3 895	80	134	188
	112	138	0,6	0,6	117,4	117,4	121,4	204	850	1 876	584	2 489	5 611	187	311	421
	112	138	0,6	0,6	120,2	117,3	121,9	101	302	603	299	937	1 946	67,6	105	143
	112	138	0,6	0,6	120,2	117,3	121,9	161	483	966	463	1 414	2 880	170	252	327
	112	138	0,6	0,6	120,2	117,3	121,9	113	338	676	323	980	1 987	170	250	321
	112	138	0,6	0,6	118,3	114,1	121,6	281	745	1 569	827	2 265	4 962	94	137	188
	112	138	0,6	0,6	118,3	114,1	121,6	403	1 058	2 207	1 161	3 092	6 571	188	266	351
	112	138	0,6	0,6	118,3	114,1	121,6	198	521	1 093	575	1 553	3 354	93	134	180
	112	138	0,6	0,6	118,3	114,1	121,6	285	745	1 549	815	2 157	4 546	189	265	346
	112	138	0,6	0,6	118,3	114,1	121,6	177	467	979	515	1 385	2 981	92	132	177
	112	138	0,6	0,6	118,3	114,1	121,6	256	669	1 390	732	1 933	4 065	188	263	343
	116	150	2	1	123	123	128,3	471	1 511	3 027	1 447	5 010	10 710	107	181	257
	116	150	2	1	123	123	128,3	691	2 377	4 959	2 010	7 133	15 359	251	399	539
	116	150	2	1	123	123	128,3	244	836	1 732	725	2 623	5 718	92,1	153	213
	116	150	2	1	123	123	128,3	336	1 285	2 768	966	3 768	8 297	219	355	476

Super precision angular contact ball bearings

Steel or ceramic balls
Steel or Vacrodur rings
Open or sealed

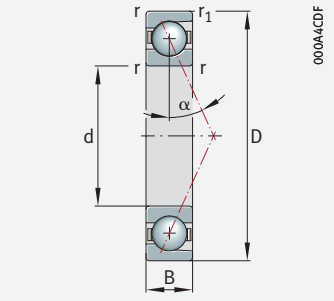

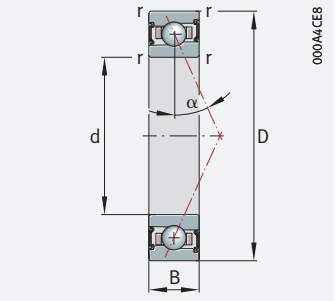

d = 105 – 110 mm

Main dimensions			Basic load ratings		Fatigue limit load	Limiting speeds[1]		Dimensions		Contact angle	Mass	Designation[2] [3]
d	D	B	dyn. C_r	stat. C_{0r}	C_{ur}	n_G grease	n_G oil[5]	r	r_1	α	m	X-life ➤ 1144
			kN	kN	N	min^{-1}	min^{-1}	min.	min.	°	≈ kg	
105	160	26	47,5	36,5	3 350	12 000	18 000	2	2	15	1,7	**HS7021-C-T-P4S**
	160	26	45	34,5	3 150	11 000	16 000	2	2	25	1,7	**HS7021-E-T-P4S**
	160	26	45	33	2 300	14 000	22 000	2	2	25	1,59	**HC7021-E-T-P4S**
	160	26	53	39,5	3 650	12 500	18 900	2	1	17	1,6	**M7021-C-T-P4S-XL**
	160	26	51	38	3 450	11 700	17 400	2	1	25	1,6	**M7021-E-T-P4S-XL**
	160	26	53	38	2 650	15 500	22 700	2	1	17	1,5	**HCM7021-C-T-P4S-XL**
	160	26	51	36	2 550	14 800	21 200	2	1	25	1,5	**HCM7021-E-T-P4S-XL**
	160	26	128	53	2 350	15 900	23 400	2	1	17	1,5	**VCM7021-C-T-P4S-XL**
	160	26	122	51	2 240	15 100	22 700	2	1	25	1,5	**VCM7021-E-T-P4S-XL**
	190	36	164	104	9 000	7 000	11 000	2,1	2,1	15	3,89	**B7221-C-T-P4S**
	190	36	156	99	8 600	6 300	9 500	2,1	2,1	25	3,88	**B7221-E-T-P4S**
	190	36	164	99	6 600	9 000	15 000	2,1	2,1	15	3,26	**HCB7221-C-T-P4S**
	190	36	157	95	6 300	7 500	12 000	2,1	2,1	25	3,25	**HCB7221-E-T-P4S**
110	150	20	61	47	4 350	8 500	13 000	1,1	1,1	15	0,85	**B71922-C-T-P4S**
	150	20	58	44,5	4 150	8 000	12 000	1,1	1,1	25	0,85	**B71922-E-T-P4S**
	150	20	61	45	3 200	12 000	19 000	1,1	1,1	15	0,71	**HCB71922-C-T-P4S**
	150	20	58	42,5	3 000	11 000	17 000	1,1	1,1	25	0,71	**HCB71922-E-T-P4S**
	150	20	34	28,5	2 650	12 000	19 000	1,1	1,1	15	0,91	**HS71922-C-T-P4S**
	150	20	32	27	2 500	11 000	17 000	1,1	1,1	25	0,91	**HS71922-E-T-P4S**
	150	20	32	26	1 820	14 000	22 000	1,1	1,1	25	0,84	**HC71922-E-T-P4S**
	150	20	39,5	28	2 600	12 700	19 300	1,1	0,6	17	0,82	**M71922-C-T-P4S-XL**
	150	20	37,5	26,5	2 470	12 000	17 700	1,1	0,6	25	0,82	**M71922-E-T-P4S-XL**
	150	20	39,5	26,5	1 880	15 800	23 000	1,1	0,6	17	0,72	**HCM71922-C-T-P4S-XL**
	150	20	38	25,5	1 800	15 000	21 600	1,1	0,6	25	0,72	**HCM71922-E-T-P4S-XL**
	150	20	95	37,5	1 670	16 200	23 000	1,1	0,6	17	0,72	**VCM71922-C-T-P4S-XL**
	150	20	91	35,5	1 590	15 400	23 000	1,1	0,6	25	0,72	**VCM71922-E-T-P4S-XL**
	170	28	129	55	2 290	15 000	21 500	2	1	17	2,09	**VCM7022-C-T-P4S-XL**
	170	28	123	52	2 180	14 300	21 500	2	1	25	2,09	**VCM7022-E-T-P4S-XL**

medias *https://www.schaeffler.de/std/1F9A*

1) The limiting speeds are based on elastically preloaded single bearings.

2) Explanation of designations SP 1.

3) The series 719 and 70 are also available with gap seals (type HSS, HCS, XCS or suffix 2RSD). Ordering examples: B7000-C-2RSD-T-P4S-UL and HSS7000-E-T-P4S-UL.

4) L = light preload; M = moderate preload; H = high preload.

5) Minimal quantity oil lubrication.

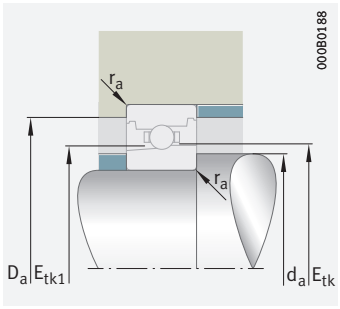

Mounting dimensions

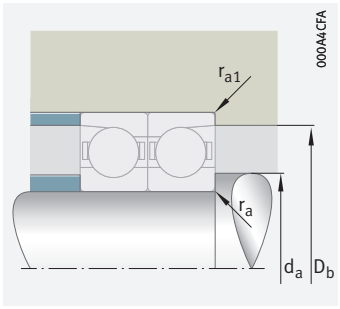

Mounting dimensions

d	Mounting dimensions							Preload force[4] F_V			Lift-off force[4] K_{aE}			Axial rigidity[4] c_a		
	d_a h12	D_a H12	r_a max.	r_{a1} max.	E_{tk} min.	E_{tk1} min.	E_{tk} E_{tk1} max.	L N	M N	H N	L N	M N	H N	L N/µm	M N/µm	H N/µm
105	116	150	2	1	125,8	121,7	129	164	492	985	489	1 536	3 194	75	117	160
	116	150	2	1	125,8	121,7	129	267	802	1 604	770	2 354	4 797	189	281	365
	116	150	2	1	125,8	121,7	129	184	552	1 104	527	1 602	3 250	188	277	357
	116	150	2	1	124,9	120,1	129	419	1 114	2 356	1 244	3 445	7 626	115	171	238
	116	150	2	1	124,9	120,1	129	599	1 574	3 292	1 731	4 636	9 916	229	326	433
	116	150	2	1	124,9	120,1	129	294	778	1 638	861	2 347	5 116	113	165	225
	116	150	2	1	124,9	120,1	129	422	1 107	2 306	1 213	3 222	6 827	229	323	424
	116	150	2	1	124,9	120,1	129	264	697	1 465	770	2 090	4 537	112	163	220
	116	150	2	1	124,9	120,1	129	379	994	2 069	1 088	2 885	6 097	228	320	420
	120,5	174,5	2,1	1	132,2	132,2	141,2	989	3 069	6 072	3 060	10 252	21 655	131	219	311
	120,5	174,5	2,1	1	132,2	132,2	141,2	1 545	5 006	10 249	4 508	15 092	31 918	312	488	656
	120,5	174,5	2,1	1	132,2	132,2	141,2	536	1 733	3 524	1 603	5 476	11 721	114	186	258
	120,5	174,5	2,1	1	132,2	132,2	141,2	800	2 742	5 723	2 303	8 067	17 220	278	434	577
110	117	143	0,6	0,6	122,4	122,4	126,4	314	1 038	2 102	961	3 415	7 373	96,1	163	232
	117	143	0,6	0,6	122,4	122,4	126,4	455	1 642	3 475	1 321	4 913	10 722	225	364	493
	117	143	0,6	0,6	122,4	122,4	126,4	158	570	1 199	468	1 777	3 931	82,1	138	193
	117	143	0,6	0,6	122,4	122,4	126,4	208	871	1 923	596	2 547	5 747	193	322	435
	117	143	0,6	0,6	124,8	121,5	126,9	116	347	693	344	1 077	2 238	70,6	110	149
	117	143	0,6	0,6	124,8	121,5	126,9	187	561	1 121	538	1 642	3 344	178	264	343
	117	143	0,6	0,6	124,8	121,5	126,9	131	393	787	375	1 141	2 312	178	262	337
	117	143	0,6	0,6	123,3	119,1	126,5	292	775	1 633	861	2 357	5 165	97	142	195
	117	143	0,6	0,6	123,3	119,1	126,5	419	1 101	2 296	1 208	3 217	6 837	195	276	365
	117	143	0,6	0,6	123,3	119,1	126,5	206	542	1 138	598	1 616	3 491	96	139	187
	117	143	0,6	0,6	123,3	119,1	126,5	296	775	1 612	848	2 244	4 730	196	275	359
	117	143	0,6	0,6	123,3	119,1	126,5	185	486	1 019	536	1 442	3 103	96	137	184
	117	143	0,6	0,6	123,3	119,1	126,5	266	696	1 446	761	2 010	4 230	195	273	356
	121	159	2	1	132,4	127,6	136,4	276	728	1 530	805	2 184	4 742	117	169	229
	121	159	2	1	132,4	127,6	136,4	396	1 038	2 160	1 136	3 012	6 367	237	333	436

Super precision angular contact ball bearings

Steel or ceramic balls
Steel or Vacrodur rings
Open or sealed

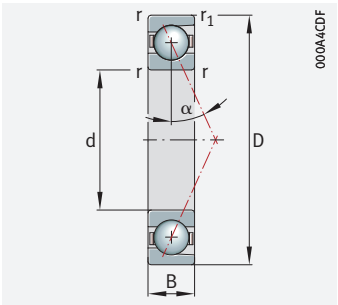

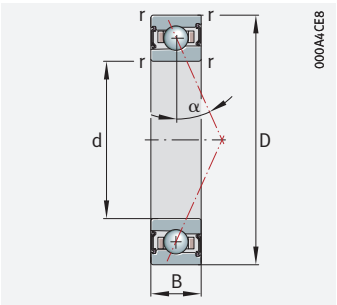

d = 110 – 120 mm

Main dimensions			Basic load ratings		Fatigue limit load	Limiting speeds[1]		Dimensions		Contact angle	Mass	Designation[2] [3]
d	D	B	dyn. C_r	stat. C_{0r}	C_{ur}	n_G grease	n_G oil[5]	r	r_1	α	m	X-life ➤ 1144
			kN	kN	N	min^{-1}	min^{-1}	min.	min.	°	≈ kg	
110	170	28	112	77	6 900	8 000	12 000	2	2	15	1,95	**B7022-C-T-P4S**
	170	28	106	73	6 600	7 500	12 000	2	2	25	1,95	**B7022-E-T-P4S**
	170	28	112	74	5 000	12 000	18 000	2	2	15	1,62	**HCB7022-C-T-P4S**
	170	28	106	70	4 750	11 000	16 000	2	2	25	1,62	**HCB7022-E-T-P4S**
	170	28	48	38	3 400	12 000	18 000	2	2	15	2,17	**HS7022-C-T-P4S**
	170	28	45,5	35,5	3 200	11 000	16 000	2	2	25	2,17	**HS7022-E-T-P4S**
	170	28	45,5	34	2 330	13 000	20 000	2	2	25	2,05	**HC7022-E-T-P4S**
	170	28	70	34	2 290	14 000	22 000	2	2	25	2,05	**XC7022-E-T-P4S**
	170	28	54	41,5	3 700	11 800	17 900	2	1	17	2,1	**M7022-C-T-P4S-XL**
	170	28	51	39,5	3 550	11 100	16 500	2	1	25	2,1	**M7022-E-T-P4S-XL**
	170	28	54	39,5	2 700	14 700	21 500	2	1	17	1,9	**HCM7022-C-T-P4S-XL**
	170	28	51	37,5	2 550	14 000	20 000	2	1	25	1,9	**HCM7022-E-T-P4S-XL**
	200	38	164	105	8 900	6 700	10 000	2,1	2,1	15	4,6	**B7222-C-T-P4S**
	200	38	156	100	8 500	6 000	9 000	2,1	2,1	25	4,59	**B7222-E-T-P4S**
	200	38	164	101	6 500	8 500	14 000	2,1	2,1	15	3,97	**HCB7222-C-T-P4S**
	200	38	156	96	6 200	7 000	10 000	2,1	2,1	25	3,96	**HCB7222-E-T-P4S**
120	165	22	76	59	5 300	8 000	12 000	1,1	1,1	15	1,16	**B71924-C-T-P4S**
	165	22	72	56	5 000	7 000	11 000	1,1	1,1	25	1,16	**B71924-E-T-P4S**
	165	22	76	57	3 850	11 000	17 000	1,1	1,1	15	0,97	**HCB71924-C-T-P4S**
	165	22	72	54	3 650	10 000	15 000	1,1	1,1	25	0,97	**HCB71924-E-T-P4S**
	165	22	35,5	32	2 850	11 000	17 000	1,1	1,1	15	1,29	**HS71924-C-T-P4S**
	165	22	33,5	30	2 650	10 000	15 000	1,1	1,1	25	1,29	**HS71924-E-T-P4S**
	165	22	33,5	29	1 940	13 000	20 000	1,1	1,1	25	1,21	**HC71924-E-T-P4S**
	165	22	51	29	1 910	14 000	22 000	1,1	1,1	25	1,21	**XC71924-E-T-P4S**
	165	22	119	46	1 910	14 800	21 700	1,1	0,6	17	1,11	**VCM71924-C-T-P4S-XL**
	165	22	113	44	1 820	14 100	21 100	1,1	0,6	25	1,11	**VCM71924-E-T-P4S-XL**
	180	28	133	59	2 390	14 000	18 800	2	1	17	2,23	**VCM7024-C-T-P4S-XL**
	180	28	127	57	2 280	13 400	18 800	2	1	25	2,23	**VCM7024-E-T-P4S-XL**

medias *https://www.schaeffler.de/std/1F9A*

1) The limiting speeds are based on elastically preloaded single bearings.

2) Explanation of designations SP 1.

3) The series 719 and 70 are also available with gap seals (type HSS, HCS, XCS or suffix 2RSD). Ordering examples: B7000-C-2RSD-T-P4S-UL and HSS7000-E-T-P4S-UL.

4) L = light preload; M = moderate preload; H = high preload.

5) Minimal quantity oil lubrication.

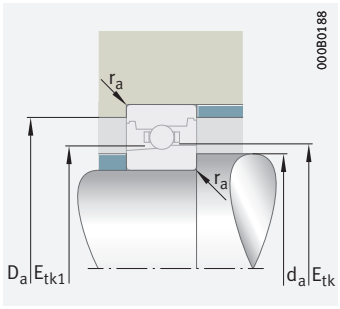

Mounting dimensions

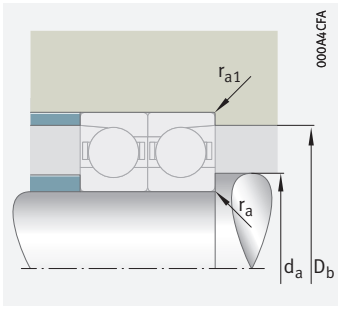

Mounting dimensions

d	Mounting dimensions							Preload force[4] F_V			Lift-off force[4] K_{aE}			Axial rigidity[4] c_a		
	d_a h12	D_a H12	r_a max.	r_{a1} max.	E_{tk} min.	E_{tk1} min.	E_{tk} E_{tk1} max.	L N	M N	H N	L N	M N	H N	L N/µm	M N/µm	H N/µm
110	121	159	2	1	128,6	128,6	135,1	643	2 033	4 052	1 981	6 757	14 370	119	200	283
	121	159	2	1	128,6	128,6	135,1	968	3 242	6 709	2 820	9 745	20 814	280	443	596
	121	159	2	1	128,6	128,6	135,1	337	1 126	2 314	1 004	3 540	7 655	103	169	234
	121	159	2	1	128,6	128,6	135,1	490	1 779	3 778	1 409	5 224	11 341	248	395	527
	121	159	2	1	133,3	129,2	136,5	168	503	1 005	499	1 566	3 257	77,2	121	164
	121	159	2	1	133,3	129,2	136,5	267	802	1 604	770	2 352	4 792	193	287	373
	121	159	2	1	133,3	129,2	136,5	187	561	1 121	535	1 627	3 299	193	284	366
	121	159	2	1	133,3	129,2	136,5	187	561	1 121	535	1 627	3 299	193	284	366
	121	159	2	1	132,4	127,6	136,4	437	1 164	2 461	1 300	3 600	7 970	120	178	248
	121	159	2	1	132,4	127,6	136,4	625	1 644	3 437	1 807	4 841	10 356	238	339	451
	121	159	2	1	132,4	127,6	136,4	307	813	1 711	900	2 452	5 346	118	171	234
	121	159	2	1	132,4	127,6	136,4	441	1 156	2 408	1 266	3 365	7 129	238	335	441
	126,5	183,5	2,1	1	139,7	139,7	148,7	989	3 069	6 072	3 060	10 252	21 655	131	219	311
	126,5	183,5	2,1	1	139,7	139,7	148,7	1 512	4 905	10 048	4 410	14 777	31 257	309	484	650
	126,5	183,5	2,1	1	139,7	139,7	148,7	536	1 733	3 524	1 603	5 476	11 721	114	186	258
	126,5	183,5	2,1	1	139,7	139,7	148,7	800	2 742	5 723	2 303	8 067	17 220	278	434	577
120	128	157	0,6	0,6	134	134	138,5	405	1 321	2 665	1 239	4 349	9 350	109	184	261
	128	157	0,6	0,6	134	134	138,5	587	2 073	4 361	1 705	6 203	13 450	255	409	553
	128	157	0,6	0,6	134	134	138,5	208	732	1 530	616	2 286	5 019	93,7	156	218
	128	157	0,6	0,6	134	134	138,5	274	1 101	2 407	785	3 223	7 191	220	362	487
	128	157	0,6	0,6	137,3	134	139,2	122	367	734	363	1 137	2 362	76,8	119	162
	128	157	0,6	0,6	137,3	134	139,2	196	587	1 173	562	1 716	3 492	193	286	371
	128	157	0,6	0,6	137,3	134	139,2	136	407	814	388	1 179	2 389	192	283	364
	128	157	0,6	0,6	137,3	134	139,2	136	407	814	388	1 179	2 389	192	283	364
	128	157	0,6	0,6	134,9	130,1	138,8	231	609	1 276	671	1 805	3 884	105	151	202
	128	157	0,6	0,6	134,9	130,1	138,8	333	872	1 811	953	2 517	5 296	214	300	391
	131	169	2	1	142,4	137,6	146,4	298	787	1 654	870	2 361	5 126	126	182	246
	131	169	2	1	142,4	137,6	146,4	428	1 120	2 332	1 227	3 253	6 877	254	358	469

Super precision angular contact ball bearings

Steel or ceramic balls
Steel or Vacrodur rings
Open or sealed

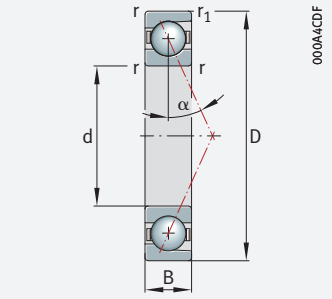

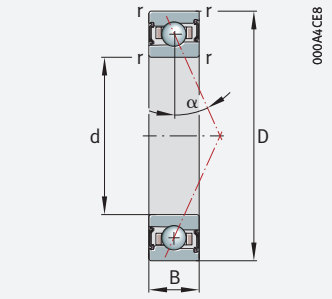

d = 120 – 130 mm

Main dimensions			Basic load ratings		Fatigue limit load	Limiting speeds[1]		Dimensions		Contact angle	Mass	Designation[2] [3]
d	D	B	dyn. C_r	stat. C_{0r}	C_{ur}	n_G grease	n_G oil[5]	r	r_1	α	m	X-life ➤ *1144*
			kN	kN	N	min^{-1}	min^{-1}	min.	min.	°	≈ kg	
120	165	22	49,5	35	3 100	11 600	17 600	1,1	0,6	17	1,1	**M71924-C-T-P4S-XL**
	165	22	47	33	2 950	10 900	16 200	1,1	0,6	25	1,1	**M71924-E-T-P4S-XL**
	165	22	49,5	33,5	2 250	14 400	21 100	1,1	0,6	17	0,97	**HCM71924-C-T-P4S-XL**
	165	22	47	32	2 140	13 700	19 700	1,1	0,6	25	0,97	**HCM71924-E-T-P4S-XL**
	180	28	115	82	7 100	7 500	12 000	2	2	15	2,08	**B7024-C-T-P4S**
	180	28	109	78	6 700	6 700	10 000	2	2	25	2,07	**B7024-E-T-P4S**
	180	28	115	78	5 200	10 000	16 000	2	2	15	1,74	**HCB7024-C-T-P4S**
	180	28	109	75	4 900	9 500	14 000	2	2	25	1,73	**HCB7024-E-T-P4S**
	180	28	49,5	40,5	3 500	10 000	16 000	2	2	15	2,33	**HS7024-C-T-P4S**
	180	28	46,5	38,5	3 300	9 500	14 000	2	2	25	2,32	**HS7024-E-T-P4S**
	180	28	46,5	36,5	2 410	12 000	19 000	2	2	25	2,2	**HC7024-E-T-P4S**
	180	28	71	36,5	2 370	13 000	20 000	2	2	25	2,2	**XC7024-E-T-P4S**
	180	28	56	44,5	3 850	11 000	16 700	2	1	17	2,2	**M7024-C-T-P4S-XL**
	180	28	53	42,5	3 700	10 400	15 400	2	1	25	2,2	**M7024-E-T-P4S-XL**
	180	28	56	42,5	2 800	13 700	18 800	2	1	17	2,1	**HCM7024-C-T-P4S-XL**
	180	28	53	40,5	2 700	13 000	18 700	2	1	25	2,1	**HCM7024-E-T-P4S-XL**
	215	40	205	138	11 300	6 000	9 000	2,1	2,1	15	5,3	**B7224-C-T-P4S**
	215	40	196	132	10 800	5 300	8 000	2,1	2,1	25	5,28	**B7224-E-T-P4S**
	215	40	205	132	8 200	7 500	12 000	2,1	2,1	15	4,2	**HCB7224-C-T-P4S**
	215	40	196	126	7 900	6 700	9 500	2,1	2,1	25	4,18	**HCB7224-E-T-P4S**
130	180	24	90	71	6 000	7 000	11 000	1,5	1,5	15	1,52	**B71926-C-T-P4S**
	180	24	85	67	5 700	6 700	10 000	1,5	1,5	25	1,52	**B71926-E-T-P4S**
	180	24	90	68	4 400	10 000	15 000	1,5	1,5	15	1,34	**HCB71926-C-T-P4S**
	180	24	86	64	4 150	9 000	14 000	1,5	1,5	25	1,34	**HCB71926-E-T-P4S**

medias *https://www.schaeffler.de/std/1F9A*

1) The limiting speeds are based on elastically preloaded single bearings.

2) Explanation of designations SP 1.

3) The series 719 and 70 are also available with gap seals (type HSS, HCS, XCS or suffix 2RSD). Ordering examples: B7000-C-2RSD-T-P4S-UL and HSS7000-E-T-P4S-UL.

4) L = light preload; M = moderate preload; H = high preload.

5) Minimal quantity oil lubrication.

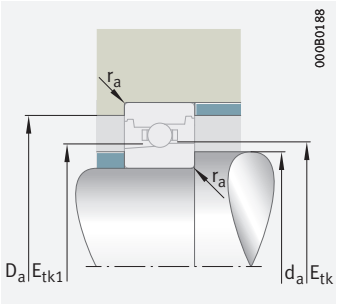

Mounting dimensions

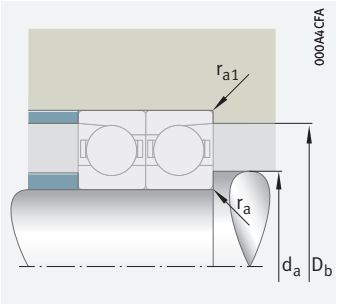

Mounting dimensions

d	Mounting dimensions							Preload force[4] F_V			Lift-off force[4] K_{aE}			Axial rigidity[4] c_a		
	d_a h12	D_a H12	r_a max.	r_{a1} max.	E_{tk} min.	E_{tk1} min.	E_{tk} E_{tk1} max.	L N	M N	H N	L N	M N	H N	L N/µm	M N/µm	H N/µm
120	128	157	0,6	0,6	134,9	130,1	138,8	366	970	2 045	1 077	2 950	6 464	107	157	215
	128	157	0,6	0,6	134,9	130,1	138,8	525	1 379	2 875	1 512	4 028	8 558	215	304	401
	128	157	0,6	0,6	134,9	130,1	138,8	257	679	1 425	749	2 023	4 370	106	152	205
	128	157	0,6	0,6	134,9	130,1	138,8	371	971	2 018	1 062	2 809	5 922	215	302	395
	131	169	2	1	138,6	138,6	145,1	653	2 069	4 129	2 008	6 858	14 599	123	206	293
	131	169	2	1	138,6	138,6	145,1	983	3 298	6 830	2 860	9 902	21 158	290	459	618
	131	169	2	1	138,6	138,6	145,1	350	1 170	2 406	1 042	3 677	7 953	107	176	245
	131	169	2	1	138,6	138,6	145,1	496	1 810	3 849	1 427	5 313	11 543	257	410	547
	131	169	2	1	143,3	139,2	146,4	171	513	1 025	508	1 594	3 313	80,8	126	171
	131	169	2	1	143,3	139,2	146,4	276	828	1 656	795	2 426	4 942	203	302	392
	131	169	2	1	143,3	139,2	146,4	193	578	1 156	552	1 676	3 398	203	299	385
	131	169	2	1	143,3	139,2	146,4	193	578	1 156	552	1 676	3 398	203	299	385
	131	169	2	1	142,4	137,6	146,4	473	1 258	2 659	1 405	3 891	8 618	129	191	266
	131	169	2	1	142,4	137,6	146,4	675	1 775	3 712	1 952	5 229	11 187	256	364	484
	131	169	2	1	142,4	137,6	146,4	332	878	1 848	972	2 650	5 780	127	184	251
	131	169	2	1	142,4	137,6	146,4	476	1 248	2 601	1 368	3 634	7 700	255	360	474
	140	195	2,1	1	148,4	148,4	159,7	1 259	3 882	7 683	3 878	12 884	27 179	139	231	326
	140	195	2,1	1	148,4	148,4	159,7	1 989	6 365	12 984	5 797	19 139	40 275	333	518	694
	140	195	2,1	1	148,4	148,4	159,7	688	2 196	4 452	2 051	6 906	14 713	122	197	272
	140	195	2,1	1	148,4	148,4	159,7	1 055	3 535	7 327	3 037	10 386	21 994	300	465	615
130	139	171	0,6	0,6	145,5	145,5	150,7	486	1 571	3 160	1 488	5 171	11 084	117	197	279
	139	171	0,6	0,6	145,5	145,5	150,7	711	2 466	5 161	2 064	7 379	15 916	275	438	590
	139	171	0,6	0,6	145,5	145,5	150,7	253	875	1 819	750	2 732	5 967	101	167	233
	139	171	0,6	0,6	145,5	145,5	150,7	346	1 342	2 904	993	3 929	8 680	240	391	524

Super precision angular contact ball bearings

Steel or ceramic balls
Steel or Vacrodur rings
Open or sealed

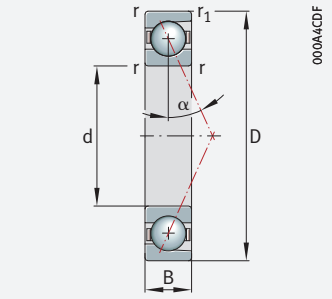

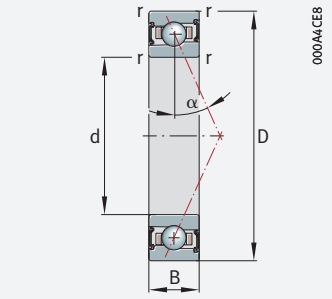

d = 130 – 130 mm

Main dimensions			Basic load ratings		Fatigue limit load	Limiting speeds[1]		Dimensions		Contact angle	Mass	Designation[2] [3]
d	D	B	dyn. C_r	stat. C_{0r}	C_{ur}	n_G grease	n_G oil[5]	r	r_1	α	m	X-life ➤ 1144
			kN	kN	N	min^{-1}	min^{-1}	min.	min.	°	≈ kg	
130	180	24	38,5	33	2 130	12 000	18 000	1,5	1,5	25	1,61	**HC71926-E-T-P4S**
	180	24	59	33	2 100	13 000	20 000	1,5	1,5	25	1,61	**XC71926-E-T-P4S**
	180	24	51	37,5	3 200	10 700	16 200	1,5	1	17	1,5	**M71926-C-T-P4S-XL**
	180	24	48,5	36	3 050	10 000	14 900	1,5	1	25	1,5	**M71926-E-T-P4S-XL**
	180	24	51	36	2 330	13 300	18 900	1,5	1	17	1,4	**HCM71926-C-T-P4S-XL**
	180	24	48,5	34,5	2 220	12 600	18 100	1,5	1	25	1,4	**HCM71926-E-T-P4S-XL**
	180	24	122	50	1 980	13 600	18 900	1,5	1	17	1,53	**VCM71926-C-T-P4S-XL**
	180	24	116	47,5	1 890	13 000	18 900	1,5	1	25	1,53	**VCM71926-E-T-P4S-XL**
	200	33	149	107	8 800	6 700	10 000	2	2	15	3,16	**B7026-C-T-P4S**
	200	33	141	102	8 400	6 000	9 500	2	2	25	3,15	**B7026-E-T-P4S**
	200	33	149	102	6 400	9 500	14 000	2	2	15	2,63	**HCB7026-C-T-P4S**
	200	33	141	97	6 100	8 500	13 000	2	2	25	2,61	**HCB7026-E-T-P4S**
	200	33	64	53	4 400	9 500	15 000	2	2	15	3,52	**HS7026-C-T-P4S**
	200	33	60	50	4 150	8 500	13 000	2	2	25	3,51	**HS7026-E-T-P4S**
	200	33	60	48	3 000	11 000	17 000	2	2	25	3,36	**HC7026-E-T-P4S**
	200	33	92	48	2 950	12 000	19 000	2	2	25	3,36	**XC7026-E-T-P4S**
	200	33	58	49,5	4 100	10 000	15 200	2	1	17	3,6	**M7026-C-T-P4S-XL**
	200	33	55	47,5	3 900	9 400	14 000	2	1	25	3,6	**M7026-E-T-P4S-XL**
	200	33	58	47,5	3 000	12 500	16 200	2	1	17	3,4	**HCM7026-C-T-P4S-XL**
	200	33	55	45,5	2 850	11 900	16 200	2	1	25	3,4	**HCM7026-E-T-P4S-XL**
	200	33	139	66	2 550	12 800	16 200	2	1	17	3,56	**VCM7026-C-T-P4S-XL**
	200	33	132	63	2 410	12 200	16 200	2	1	25	3,56	**VCM7026-E-T-P4S-XL**
	230	40	215	151	11 900	5 600	8 500	3	3	15	6,11	**B7226-C-T-P4S**
	230	40	205	144	11 400	5 000	7 500	3	3	25	6,09	**B7226-E-T-P4S**
	230	40	215	144	8 700	7 000	11 000	3	3	15	4,94	**HCB7226-C-T-P4S**
	230	40	205	138	8 300	6 000	9 000	3	3	25	4,92	**HCB7226-E-T-P4S**

medias *https://www.schaeffler.de/std/1F9A*

1) The limiting speeds are based on elastically preloaded single bearings.

2) Explanation of designations SP 1.

3) The series 719 and 70 are also available with gap seals (type HSS, HCS, XCS or suffix 2RSD). Ordering examples: B7000-C-2RSD-T-P4S-UL and HSS7000-E-T-P4S-UL.

4) L = light preload; M = moderate preload; H = high preload.

5) Minimal quantity oil lubrication.

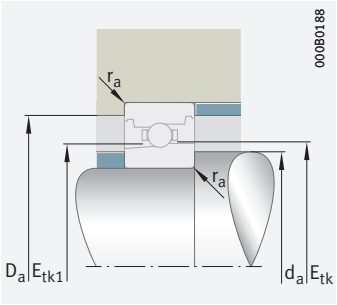

Mounting dimensions

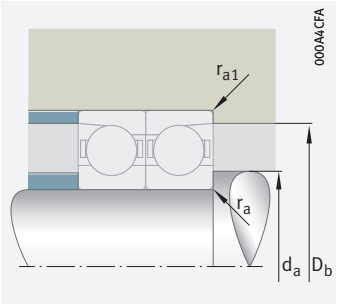

Mounting dimensions

	Mounting dimensions							Preload force[4] F_V			Lift-off force[4] K_{aE}			Axial rigidity[4] c_a		
d	d_a h12	D_a H12	r_a	r_{a1}	E_{tk}	E_{tk1}	E_{tk} E_{tk1}	L	M	H	L	M	H	L	M	H
			max.	max.	min.	min.	max.	N	N	N	N	N	N	N/µm	N/µm	N/µm
130	139	171	0,6	0,6	149,3	145,8	151,4	155	466	932	444	1 349	2 732	204	300	385
	139	171	0,6	0,6	149,3	145,8	151,4	155	466	932	444	1 349	2 732	204	300	385
	139	171	0,6	0,6	147,4	142,6	151,3	396	1 050	2 213	1 166	3 194	7 000	115	169	231
	139	171	0,6	0,6	147,4	142,6	151,3	568	1 491	3 109	1 635	4 356	9 258	231	327	431
	139	171	0,6	0,6	147,4	142,6	151,3	279	735	1 542	811	2 190	4 731	114	164	221
	139	171	0,6	0,6	147,4	142,6	151,3	401	1 050	2 183	1 148	3 038	6 405	231	325	424
	139	171	0,6	0,6	147,4	142,6	151,3	250	659	1 380	726	1 954	4 205	113	162	217
	139	171	0,6	0,6	147,4	142,6	151,3	360	943	1 959	1 031	2 723	5 728	230	323	421
	142	189	2	1	151,6	151,6	159,3	850	2 669	5 314	2 616	8 846	18 773	137	229	324
	142	189	2	1	151,6	151,6	159,3	1 312	4 328	8 915	3 820	13 001	27 627	326	512	689
	142	189	2	1	151,6	151,6	159,3	464	1 524	3 119	1 381	4 791	10 306	120	196	272
	142	189	2	1	151,6	151,6	159,3	679	2 399	5 054	1 953	7 044	15 161	291	459	611
	142	189	2	1	157,4	152,6	161,2	219	658	1 317	653	2 046	4 251	91,8	143	194
	142	189	2	1	157,4	152,6	161,2	357	1 070	2 139	1 026	3 133	6 381	231	344	446
	142	189	2	1	157,4	152,6	161,2	244	733	1 466	700	2 126	4 308	230	338	435
	142	189	2	1	157,4	152,6	161,2	244	733	1 466	700	2 126	4 308	230	338	435
	142	189	2	1	157,4	152,6	161,3	525	1 398	2 957	1 563	4 329	9 590	142	211	294
	142	189	2	1	157,4	152,6	161,3	750	1 972	4 124	2 168	5 811	12 435	282	402	535
	142	189	2	1	157,4	152,6	161,3	369	976	2 055	1 081	2 948	6 431	140	204	278
	142	189	2	1	157,4	152,6	161,3	529	1 387	2 889	1 519	4 038	8 558	282	398	523
	142	189	2	1	157,4	152,6	161,3	331	875	1 839	967	2 626	5 703	139	201	272
	142	189	2	1	157,4	152,6	161,3	475	1 245	2 592	1 363	3 615	7 643	281	395	518
	148	211,5	2,5	1	160,9	160,9	172	1 306	4 034	7 993	4 018	13 354	28 189	147	244	344
	148	211,5	2,5	1	160,9	160,9	172	2 065	6 617	13 506	6 015	19 876	41 831	353	549	735
	148	211,5	2,5	1	160,9	160,9	172	716	2 288	4 642	2 132	7 184	15 307	129	208	288
	148	211,5	2,5	1	160,9	160,9	172	1 098	3 687	7 648	3 160	10 826	22 934	318	493	652

Super precision angular contact ball bearings

Steel or ceramic balls
Steel or Cronidur rings
Open or sealed

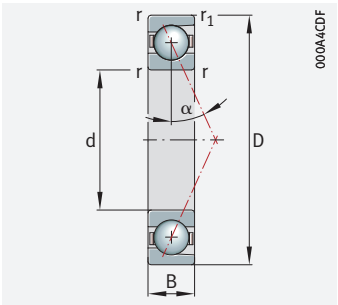

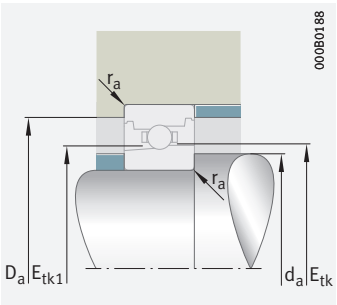

Mounting dimensions

d = 140 – 150 mm

Main dimensions			Basic load ratings		Fatigue limit load	Limiting speeds[1]		Dimensions		Contact angle	Mass	Designation[2]
d	D	B	dyn. C_r	stat. C_{0r}	C_{ur}	n_G grease	n_G oil[4]	r	r_1	α	m	
			kN	kN	N	min^{-1}	min^{-1}	min.	min.	°	≈ kg	
140	190	24	89	73	6 000	6 000	9 500	1,5	1,5	25	1,62	**B71928-E-T-P4S**[5]
	190	24	94	77	6 400	6 700	10 000	1,5	1,5	15	1,62	**B71928-C-T-P4S**[5]
	190	24	89	70	4 400	8 500	13 000	1,5	1,5	25	1,42	**HCB71928-E-T-P4S**[5]
	190	24	94	74	4 650	9 500	14 000	1,5	1,5	15	1,42	**HCB71928-C-T-P4S**[5]
	210	33	145	108	8 600	5 600	9 000	2	2	25	3,34	**B7028-E-T-P4S**[5]
	210	33	153	114	9 100	6 300	10 000	2	2	15	3,35	**B7028-C-T-P4S**[5]
	210	33	145	103	6 300	8 000	12 000	2	2	25	2,78	**HCB7028-E-T-P4S**[5]
	210	33	153	109	6 600	9 000	14 000	2	2	15	2,79	**HCB7028-C-T-P4S**[5]
	250	42	213	157	11 900	4 500	6 700	3	3	25	7,86	**B7228-E-T-P4S**
	250	42	224	164	12 500	5 000	7 500	3	3	15	7,88	**B7228-C-T-P4S**
	250	42	214	150	8 700	5 300	8 000	3	3	25	6,6	**HCB7228-E-T-P4S**
	250	42	224	157	9 100	6 300	9 500	3	3	15	6,62	**HCB7228-C-T-P4S**
150	210	28	119	95	7 500	5 600	8 500	2	1	25	2,49	**B71930-E-T-P4S**
	210	28	125	101	7 900	6 300	9 500	2	1	15	2,49	**B71930-C-T-P4S**
	210	28	119	91	5 500	7 500	12 000	2	1	25	2,09	**HCB71930-E-T-P4S**
	210	28	126	96	5 800	8 500	13 000	2	1	15	2,09	**HCB71930-C-T-P4S**
	225	35	178	130	10 100	5 300	8 000	2,1	2,1	25	4,03	**B7030-E-T-P4S**
	225	35	187	137	10 600	6 000	9 000	2,1	2,1	15	4,04	**B7030-C-T-P4S**
	225	35	178	125	7 300	7 500	11 000	2,1	2,1	25	3,24	**HCB7030-E-T-P4S**
	225	35	188	131	7 700	8 000	13 000	2,1	2,1	15	3,25	**HCB7030-C-T-P4S**
	270	45	221	169	12 400	4 000	6 000	3	3	25	10,1	**B7230-E-T-P4S**
	270	45	232	178	13 000	4 500	6 700	3	3	15	10,1	**B7230-C-T-P4S**
	270	45	221	162	9 000	5 000	7 500	3	3	25	8,79	**HCB7230-E-T-P4S**
	270	45	232	170	9 500	6 000	8 500	3	3	15	8,82	**HCB7230-C-T-P4S**

medias *https://www.schaeffler.de/std/1F9A*

1) The limiting speeds are based on elastically preloaded single bearings.

2) Explanation of designations SP 1.

3) L = light preload; M = moderate preload; H = high preload.

4) Minimal quantity oil lubrication.

5) The series 719 and 70 are also available with gap seals (type HSS, HCS, XCS or suffix 2RSD).
Ordering examples: B7000-C-2RSD-T-P4S-UL and HSS7000-E-T-P4S-UL.

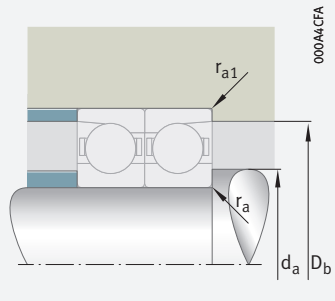

Mounting dimensions

d	Mounting dimensions							Preload force[3] F_V			Lift-off force[3] K_{aE}			Axial rigidity[3] c_a		
	d_a h12	D_a H12	r_a max.	r_{a1} max.	E_{tk} min.	E_{tk1} min.	E_{tk} E_{tk1} max.	L N	M N	H N	L N	M N	H N	L N/µm	M N/µm	H N/µm
140	149	181	0,6	0,6	155,5	155,5	160,6	736	2 564	5 373	2 136	7 663	16 542	292	466	628
	149	181	0,6	0,6	155,5	155,5	160,6	504	1 632	3 289	1 539	5 357	11 496	124	208	295
	149	181	0,6	0,6	155,5	155,5	160,6	348	1 367	2 967	999	3 997	8 852	253	413	554
	149	181	0,6	0,6	155,5	155,5	160,6	259	901	1 876	767	2 806	6 135	107	177	246
	152	199	2	1	161,6	161,6	169,2	1 336	4 416	9 103	3 888	13 252	28 168	339	532	714
	152	199	2	1	161,6	161,6	169,2	866	2 724	5 429	2 661	9 007	19 129	142	237	335
	152	199	2	1	161,6	161,6	169,2	685	2 429	5 123	1 968	7 126	15 352	302	476	633
	152	199	2	1	161,6	161,6	169,2	471	1 553	3 179	1 402	4 871	10 483	125	203	282
	163	226,5	2,5	2,5	175,9	175,9	187	2 141	6 870	14 029	6 233	20 615	43 390	373	579	775
	163	226,5	2,5	2,5	175,9	175,9	187	1 353	4 185	8 302	4 158	13 825	29 200	155	257	362
	163	226,5	2,5	2,5	175,9	175,9	187	1 141	3 839	7 968	3 284	11 267	23 876	336	521	689
	163	226,5	2,5	2,5	175,9	175,9	187	749	2 397	4 864	2 230	7 516	16 017	137	220	304
150	160	199	1	1	168,6	168,6	174,9	1 040	3 522	7 317	3 021	10 536	22 549	331	524	704
	160	199	1	1	168,6	168,6	174,9	706	2 249	4 507	2 161	7 402	15 795	141	235	333
	160	199	1	1	168,6	168,6	174,9	527	1 950	4 164	1 513	5 709	12 445	294	470	627
	160	199	1	1	168,6	168,6	174,9	376	1 268	2 617	1 117	3 963	8 587	123	201	279
	163	213	2,1	1	172,2	172,2	181	1 691	5 520	11 332	4 923	16 566	35 067	371	580	778
	163	213	2,1	1	172,2	172,2	181	1 104	3 443	6 843	3 394	11 397	24 140	156	260	367
	163	213	2,1	1	172,2	172,2	181	889	3 079	6 448	2 556	9 036	19 329	333	522	692
	163	213	2,1	1	172,2	172,2	181	602	1 958	3 992	1 793	6 146	13 171	137	222	308
	178	241,5	2,5	2,5	190,9	190,9	201,9	2 173	6 987	14 280	6 322	20 936	44 075	390	605	808
	178	241,5	2,5	2,5	190,9	190,9	201,9	1 401	4 337	8 611	4 299	14 296	30 211	163	269	380
	178	241,5	2,5	2,5	190,9	190,9	201,9	1 167	3 935	8 175	3 355	11 539	24 467	352	546	722
	178	241,5	2,5	2,5	190,9	190,9	201,9	761	2 440	4 958	2 262	7 633	16 272	143	230	317

Super precision angular contact ball bearings

Steel or ceramic balls
Steel or Cronidur rings
Open or sealed

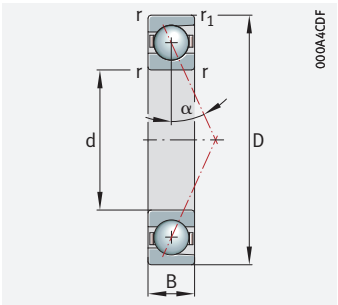

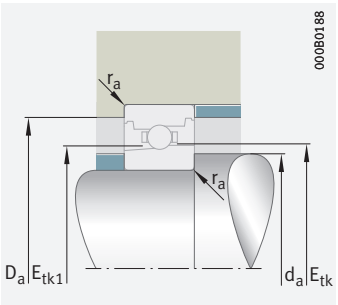

Mounting dimensions

d = 160 – 180 mm

Main dimensions			Basic load ratings		Fatigue limit load	Limiting speeds[1]		Dimensions		Contact angle	Mass	Designation[2]
d	D	B	dyn. C_r	stat. C_{0r}	C_{ur}	n_G grease	n_G oil[4]	r	r_1	α	m	
			kN	kN	N	min^{-1}	min^{-1}	min.	min.	°	≈ kg	
160	220	28	121	100	7 700	5 300	8 000	2	1	25	2,62	**B71932-E-T-P4S**
	220	28	128	106	8 100	6 000	9 000	2	1	15	2,63	**B71932-C-T-P4S**
	220	28	121	96	5 600	7 500	11 000	2	1	25	2,2	**HCB71932-E-T-P4S**
	220	28	128	101	5 900	8 000	12 000	2	1	15	2,21	**HCB71932-C-T-P4S**
	240	38	182	138	10 400	5 000	7 500	2,1	2,1	25	5,01	**B7032-E-T-P4S**
	240	38	192	146	10 900	5 600	8 500	2,1	2,1	15	5,04	**B7032-C-T-P4S**
	240	38	183	132	7 500	7 000	11 000	2,1	2,1	25	4,18	**HCB7032-E-T-P4S**
	240	38	193	140	8 000	7 500	12 000	2,1	2,1	15	4,2	**HCB7032-C-T-P4S**
	290	48	236	192	13 500	3 800	5 600	3	3	25	12,9	**B7232-E-T-P4S**
	290	48	249	202	14 200	4 300	6 300	3	3	15	12,9	**B7232-C-T-P4S**
	290	48	237	184	9 900	4 500	6 700	3	3	25	11,4	**HCB7232-E-T-P4S**
	290	48	249	193	10 400	5 300	8 000	3	3	15	11,4	**HCB7232-C-T-P4S**
170	230	28	126	108	8 100	5 000	7 500	2	1	25	2,78	**B71934-E-T-P4S**
	230	28	133	115	8 600	5 600	8 500	2	1	15	2,79	**B71934-C-T-P4S**
	230	28	126	104	5 900	7 000	11 000	2	1	25	2,32	**HCB71934-E-T-P4S**
	230	28	133	110	6 200	7 500	12 000	2	1	15	2,33	**HCB71934-C-T-P4S**
	260	42	229	180	13 000	4 500	7 000	2,1	2,1	25	6,49	**B7034-E-T-P4S**
	260	42	241	189	13 700	5 300	8 000	2,1	2,1	15	6,52	**B7034-C-T-P4S**
	310	52	285	241	16 500	3 600	5 300	4	4	25	15,6	**B7234-E-T-P4S**
	310	52	300	255	17 300	3 800	5 600	4	4	15	15,7	**B7234-C-T-P4S**
180	250	33	162	138	10 000	4 500	7 000	2	1	25	4,12	**B71936-E-T-P4S**
	250	33	171	146	10 500	5 300	8 000	2	1	15	4,14	**B71936-C-T-P4S**
	250	33	162	132	7 300	6 300	10 000	2	1	25	3,43	**HCB71936-E-T-P4S**
	250	33	171	139	7 700	7 000	11 000	2	1	15	3,45	**HCB71936-C-T-P4S**
	280	46	236	193	13 500	4 300	6 700	2,1	2,1	25	8,76	**B7036-E-T-P4S**
	280	46	248	203	14 200	4 800	7 500	2,1	2,1	15	8,79	**B7036-C-T-P4S**
	320	52	295	260	17 300	3 400	5 000	4	4	25	16,3	**B7236-E-T-P4S**
	320	52	310	270	18 100	3 800	5 600	4	4	15	16,4	**B7236-C-T-P4S**

medias *https://www.schaeffler.de/std/1F9A*

[1] The limiting speeds are based on elastically preloaded single bearings.

[2] Explanation of designations SP 1.

[3] L = light preload; M = moderate preload; H = high preload.

[4] Minimal quantity oil lubrication.

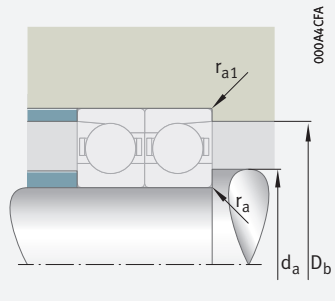

Mounting dimensions

d	Mounting dimensions							Preload force[3] F_V			Lift-off force[3] K_{aE}			Axial rigidity[3] c_a		
	d_a h12	D_a H12	r_a max.	r_{a1} max.	E_{tk} min.	E_{tk1} min.	E_{tk} E_{tk1} max.	L N	M N	H N	L N	M N	H N	L N/µm	M N/µm	H N/µm
160	170	209	1	1	179,5	179,5	184,7	1 055	3 579	7 439	3 062	10 696	22 899	341	539	725
	170	209	1	1	179,5	179,5	184,7	722	2 304	4 619	2 209	7 572	16 164	145	243	344
	170	209	1	1	179,5	179,5	184,7	521	1 940	4 152	1 495	5 676	12 392	301	481	642
	170	209	1	1	179,5	179,5	184,7	374	1 265	2 614	1 108	3 944	8 551	126	206	285
	174	228	2,1	1	184,7	184,7	193,4	1 715	5 606	11 519	4 988	16 807	35 587	385	601	806
	174	228	2,1	1	184,7	184,7	193,4	1 145	3 574	7 107	3 520	11 821	25 044	163	271	384
	174	228	2,1	1	184,7	184,7	193,4	898	3 121	6 545	2 581	9 154	19 595	345	541	717
	174	228	2,1	1	184,7	184,7	193,4	609	1 986	4 053	1 812	6 221	13 337	142	230	318
	191	259	2,5	2,5	205,9	205,9	216,9	2 326	7 493	15 324	6 760	22 418	47 204	429	665	888
	191	259	2,5	2,5	205,9	205,9	216,9	1 502	4 659	9 263	4 601	15 309	32 375	179	295	416
	191	259	2,5	2,5	205,9	205,9	216,9	1 235	4 183	8 703	3 550	12 254	26 003	387	599	792
	191	259	2,5	2,5	205,9	205,9	216,9	827	2 657	5 402	2 457	8 298	17 692	158	254	350
170	180	219	1	1	188,6	188,6	194,7	1 105	3 757	7 816	3 206	11 221	24 031	364	575	773
	180	219	1	1	188,6	188,6	194,7	742	2 375	4 770	2 266	7 779	16 624	154	256	362
	180	219	1	1	188,6	188,6	194,7	534	2 004	4 295	1 533	5 856	12 804	318	510	681
	180	219	1	1	188,6	188,6	194,7	385	1 306	2 703	1 138	4 063	8 815	133	217	301
	185	246	2,1	1	195,9	195,9	206,9	2 250	7 240	14 802	6 541	21 677	45 639	409	635	848
	185	246	2,1	1	195,9	195,9	206,9	1 448	4 488	8 919	4 439	14 768	31 222	171	282	397
	205	275	3	3	217,1	217,1	230,4	2 860	9 126	18 610	8 307	27 255	57 164	452	699	930
	205	275	3	3	217,1	217,1	230,4	1 864	5 749	11 422	5 698	18 828	39 747	189	311	436
180	192	238	1	1	201,6	201,6	209	1 468	4 890	10 108	4 263	14 618	31 112	402	630	845
	192	238	1	1	201,6	201,6	209	960	3 036	6 076	2 933	9 953	21 191	168	279	394
	192	238	1	1	201,6	201,6	209	731	2 635	5 587	2 098	7 710	16 669	354	561	746
	192	238	1	1	201,6	201,6	209	519	1 726	3 546	1 540	5 380	11 597	148	240	332
	196	264	2,1	1	210,9	210,9	221,9	2 326	7 493	15 324	6 760	22 418	47 204	429	665	888
	196	264	2,1	1	210,9	210,9	221,9	1 502	4 659	9 263	4 601	15 309	32 375	179	295	416
	213,5	286,5	3	3	227,1	227,1	240,4	2 957	9 444	19 266	8 585	28 184	59 117	475	733	976
	213,5	286,5	3	3	227,1	227,1	240,4	1 891	5 843	11 625	5 771	19 076	40 296	197	323	453

Super precision angular contact ball bearings

Steel or ceramic balls
Steel or Cronidur rings
Open or sealed

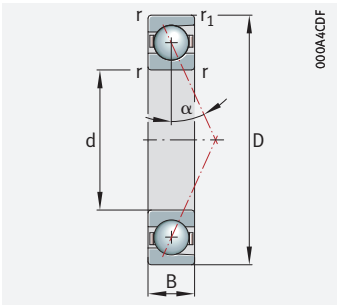

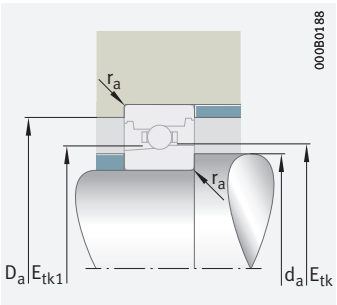

Mounting dimensions

d = 190 – 220 mm

Main dimensions			Basic load ratings		Fatigue limit load	Limiting speeds[1]		Dimensions		Contact angle	Mass	Designation[2]
d	D	B	dyn. C_r	stat. C_{0r}	C_{ur}	n_G grease	n_G oil[4]	r	r_1	α	m	
			kN	kN	N	min^{-1}	min^{-1}	min.	min.	°	≈ kg	
190	260	33	164	144	10 200	4 500	6 700	2	1	25	4,31	**B71938-E-T-P4S**
	260	33	174	152	10 700	5 000	7 500	2	1	15	4,33	**B71938-C-T-P4S**
	260	33	165	138	7 400	6 000	9 500	2	1	25	3,58	**HCB71938-E-T-P4S**
	260	33	174	146	7 800	6 700	10 000	2	1	15	3,6	**HCB71938-C-T-P4S**
	290	46	243	204	14 000	4 000	6 300	2,1	2,1	25	9,16	**B7038-E-T-P4S**
	290	46	255	215	14 700	4 500	7 000	2,1	2,1	15	9,2	**B7038-C-T-P4S**
	340	55	305	275	17 900	3 200	4 800	4	4	25	20	**B7238-E-T-P4S**
	340	55	320	290	18 800	3 400	5 000	4	4	15	20	**B7238-C-T-P4S**
200	280	38	199	170	11 600	4 000	6 300	2,1	1,1	25	6,03	**B71940-E-T-P4S**
	280	38	210	179	12 200	4 500	7 000	2,1	1,1	15	6,05	**B71940-C-T-P4S**
	280	38	199	162	8 400	5 600	9 000	2,1	1,1	25	5,04	**HCB71940-E-T-P4S**
	280	38	211	171	8 900	6 300	10 000	2,1	1,1	15	5,07	**HCB71940-C-T-P4S**
	310	51	295	260	17 200	3 800	6 000	2,1	2,1	25	11,6	**B7040-E-T-P4S**
	310	51	310	270	18 000	4 300	6 700	2,1	2,1	15	11,6	**B7040-C-T-P4S**
	360	58	315	295	18 500	3 000	4 500	4	4	25	24,2	**B7240-E-T-P4S**
	360	58	330	310	19 500	3 200	4 800	4	4	15	24,2	**B7240-C-T-P4S**
220	300	38	212	192	12 600	3 800	6 000	2,1	1,1	25	6,58	**B71944-E-T-P4S**
	300	38	224	203	13 300	4 300	6 700	2,1	1,1	15	6,6	**B71944-C-T-P4S**
	300	38	212	184	9 200	5 300	8 000	2,1	1,1	25	5,47	**HCB71944-E-T-P4S**
	300	38	224	194	9 700	6 000	9 000	2,1	1,1	15	5,49	**HCB71944-C-T-P4S**
	340	56	315	295	18 500	3 600	5 300	3	3	25	15,7	**B7044-E-T-P4S**
	340	56	330	310	19 500	4 000	6 000	3	3	15	15,7	**B7044-C-T-P4S**
	400	65	385	380	22 700	2 600	4 000	4	4	25	33,1	**B7244-E-T-P4S**
	400	65	405	400	23 900	2 800	4 300	4	4	15	33,1	**B7244-C-T-P4S**

medias *https://www.schaeffler.de/std/1F9A*

1) The limiting speeds are based on elastically preloaded single bearings.
2) Explanation of designations SP 1.
3) L = light preload; M = moderate preload; H = high preload.
4) Minimal quantity oil lubrication.

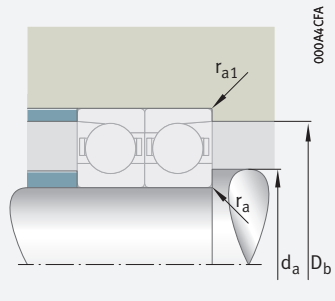

Mounting dimensions

d	Mounting dimensions							Preload force[3] F_V			Lift-off force[3] K_{aE}			Axial rigidity[3] c_a		
	d_a h12	D_a H12	r_a max.	r_{a1} max.	E_{tk} min.	E_{tk1} min.	E_{tk} E_{tk1} max.	L N	M N	H N	L N	M N	H N	L N/µm	M N/µm	H N/µm
190	202	247	1	1	211,6	211,6	218,9	1 250	4 547	9 653	3 619	13 545	29 595	388	627	847
	202	247	1	1	211,6	211,6	218,9	888	2 947	5 992	2 700	9 612	20 790	166	281	398
	202	247	1	1	211,6	211,6	218,9	557	2 383	5 290	1 596	6 951	15 738	331	554	747
	202	247	1	1	211,6	211,6	218,9	450	1 629	3 436	1 328	5 053	11 178	143	239	334
	206	274	2,1	1	220,9	220,9	231,8	2 128	7 254	15 104	6 172	21 646	46 379	429	678	910
	206	274	2,1	1	220,9	220,9	231,8	1 436	4 599	9 248	4 377	15 038	32 154	181	302	426
	223,5	306,5	3	3	242,1	242,1	255,3	2 797	9 366	19 397	8 105	27 894	59 391	482	755	1 010
	223,5	306,5	3	3	242,1	242,1	255,3	1 846	5 864	11 779	5 614	19 073	40 669	201	333	468
200	214	266	1	1	224,7	224,7	233,1	1 635	5 765	12 127	4 737	17 199	37 246	423	676	911
	214	266	1	1	224,7	224,7	233,1	1 127	3 678	7 439	3 433	12 027	25 875	180	302	427
	214	266	1	1	224,7	224,7	233,1	768	3 083	6 732	2 202	9 005	20 060	366	601	806
	214	266	1	1	224,7	224,7	233,1	571	2 012	4 211	1 688	6 249	13 711	154	256	355
	217	293	2,1	1	232,1	232,1	245,4	2 711	9 065	18 765	7 860	27 018	57 509	460	722	965
	217	293	2,1	1	232,1	232,1	245,4	1 791	5 681	11 402	5 451	18 508	39 448	192	318	448
	238,5	321,5	3	3	257,1	257,1	270,1	2 882	9 666	20 030	8 349	28 771	61 275	503	789	1 055
	238,5	321,5	3	3	257,1	257,1	270,1	1 902	6 047	12 156	5 777	19 638	41 892	210	347	488
220	234	286	1	1	244,7	244,7	253,1	1 705	6 060	12 777	4 937	18 042	39 132	461	739	995
	234	286	1	1	244,7	244,7	253,1	1 185	3 886	7 879	3 600	12 649	27 258	196	329	465
	234	286	1	1	244,7	244,7	253,1	779	3 184	6 985	2 232	9 284	20 766	396	653	877
	234	286	1	1	244,7	244,7	253,1	606	2 147	4 503	1 788	6 651	14 612	169	280	390
	239	321	2,5	1	257,1	257,1	270,1	2 882	9 666	20 030	8 349	28 771	61 275	503	789	1 055
	239	321	2,5	1	257,1	257,1	270,1	1 902	6 047	12 156	5 777	19 638	41 892	210	347	488
	264	356	3	3	282,3	282,3	298,2	3 642	12 021	24 787	10 546	35 720	75 626	540	840	1 119
	264	356	3	3	282,3	282,3	298,2	2 387	7 527	15 105	7 238	24 345	51 776	224	368	515

Super precision angular contact ball bearings

Steel or ceramic balls
Steel or Cronidur rings
Open or sealed

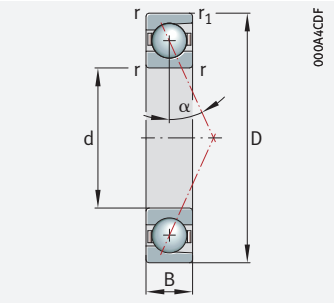

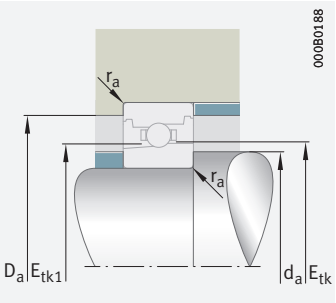

Mounting dimensions

d = 240 – 300 mm

Main dimensions			Basic load ratings		Fatigue limit load	Limiting speeds[1]		Dimensions		Contact angle	Mass	Designation[2]
d	D	B	dyn. C_r	stat. C_{0r}	C_{ur}	n_G grease	n_G oil[4]	r	r_1	α	m	
			kN	kN	N	min^{-1}	min^{-1}	min.	min.	°	≈ kg	
240	320	38	218	208	13 100	3 600	5 300	2,1	1,1	25	7,08	**B71948-E-T-P4S**
	320	38	231	220	13 900	4 000	6 000	2,1	1,1	15	7,1	**B71948-C-T-P4S**
	360	56	320	310	19 000	3 200	5 000	3	3	25	16,7	**B7048-E-T-P4S**
	360	56	340	330	20 100	3 600	5 600	3	3	15	16,8	**B7048-C-T-P4S**
260	360	46	295	290	17 600	3 600	5 300	2,1	1,1	15	12	**B71952-C-T-P4S**
280	380	46	305	320	18 500	3 200	5 000	2,1	1,1	15	12,9	**B71956-C-T-P4S**
300	420	56	370	405	22 500	3 000	4 500	3	1,1	15	20	**B71960-C-T-P4S**

medias *https://www.schaeffler.de/std/1F9A*

[1] The limiting speeds are based on elastically preloaded single bearings.
[2] Explanation of designations SP 1.
[3] L = light preload; M = moderate preload; H = high preload.
[4] Minimal quantity oil lubrication.

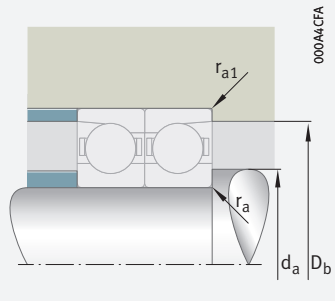

Mounting dimensions

	Mounting dimensions							Preload force[3] F_V			Lift-off force[3] K_{aE}			Axial rigidity[3] c_a		
d	d_a h12	D_a H12	r_a max.	r_{a1} max.	E_{tk} min.	E_{tk1} min.	E_{tk} E_{tk1} max.	L N	M N	H N	L N	M N	H N	L N/µm	M N/µm	H N/µm
240	254	307	1	1	264,7	264,7	272,9	1 760	6 279	13 255	5 092	18 673	40 536	488	781	1 052
	254	307	1	1	264,7	264,7	272,9	1 224	4 024	8 171	3 712	13 066	28 181	207	347	490
	260	341	2,5	1	277,1	277,1	290	2 914	9 801	20 327	8 437	29 140	62 090	521	817	1 092
	260	341	2,5	1	277,1	277,1	290	1 957	6 231	12 533	5 940	20 205	43 114	219	361	507
260	278	342	1	1	290,9	290,9	301,4	1 615	5 221	10 556	4 894	16 900	36 243	222	368	518
280	298	362	1	1	310,9	310,9	321,2	1 696	5 491	11 113	5 134	17 744	38 073	236	392	551
300	322	398	1	1	337,1	337,1	349,7	2 084	6 676	13 480	6 297	21 485	45 930	249	409	574

Super precision angular contact ball bearings

Ceramic balls
Steel rings
Design DLR

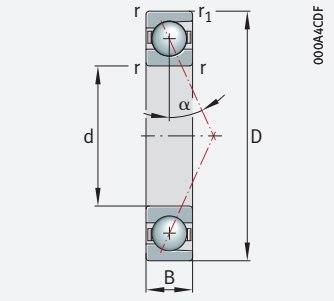

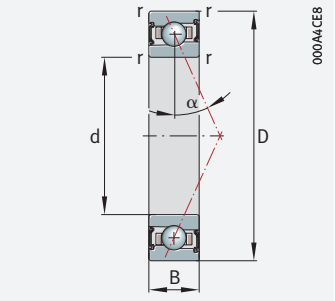

d = 20 – 30 mm

Main dimensions			Basic load ratings		Fatigue limit load	Limiting speeds[1]		Dimensions		Mass	Designation[2]
d	D	B	dyn. C_r	stat. C_{0r}	C_{ur}	n_G grease	n_G oil[4]	r	r_1	m	
			kN	kN	N	min^{-1}	min^{-1}	min.	min.	≈ kg	
20	42	12	10,3	4,05	325	53 000	80 000	0,6	0,6	0,06	**HCB7004-CDLR-T-P4S**
	42	12	9,8	3,9	315	48 000	75 000	0,6	0,6	0,06	**HCB7004-EDLR-T-P4S**
	42	12	5,4	2,47	199	60 000	95 000	0,6	0,6	0,072	**HC7004-EDLR-T-P4S**
	42	12	8,3	2,47	196	67 000	100 000	0,6	0,6	0,072	**XC7004-EDLR-T-P4S**
25	42	9	6,6	2,65	214	61 200	89 600	0,3	0,15	0,034	**HCM71905-CDLR-T-P4S-XL**
	42	9	6,3	2,55	205	58 300	83 600	0,3	0,15	0,034	**HCM71905-EDLR-T-P4S-XL**
	42	9	15,7	3,7	189	62 700	98 600	0,3	0,15	0,034	**VCM71905-CDLR-T-P4S-XL**
	42	9	15,1	3,55	181	59 800	89 600	0,3	0,15	0,034	**VCM71905-EDLR-T-P4S-XL**
	47	12	13,7	5,6	455	45 000	70 000	0,6	0,6	0,064	**HCB7005-CDLR-T-P4S**
	47	12	13,1	5,4	435	40 000	63 000	0,6	0,6	0,064	**HCB7005-EDLR-T-P4S**
	47	12	5,5	2,65	215	53 000	80 000	0,6	0,6	0,083	**HC7005-EDLR-T-P4S**
	47	12	8	3,15	250	57 000	83 400	0,6	0,3	0,069	**HCM7005-CDLR-T-P4S-XL**
	47	12	7,7	3	242	54 200	77 800	0,6	0,3	0,069	**HCM7005-EDLR-T-P4S-XL**
	47	12	19,2	4,4	223	58 400	91 700	0,6	0,3	0,069	**VCM7005-CDLR-T-P4S-XL**
	47	12	18,4	4,2	214	55 600	83 400	0,6	0,3	0,069	**VCM7005-EDLR-T-P4S-XL**
30	47	9	8,5	4,2	335	43 000	67 000	0,3	0,3	0,043	**HCB71906-CDLR-T-P4S**
	47	9	8,1	3,95	320	38 000	60 000	0,3	0,3	0,043	**HCB71906-EDLR-T-P4S**
	47	9	5,6	2,85	228	48 000	75 000	0,3	0,3	0,044	**HC71906-EDLR-T-P4S**
	47	9	6,9	3,05	245	53 300	78 000	0,3	0,15	0,039	**HCM71906-CDLR-T-P4S-XL**
	47	9	6,6	2,9	235	50 700	72 800	0,3	0,15	0,039	**HCM71906-EDLR-T-P4S-XL**
	47	9	16,7	4,25	217	54 600	85 800	0,3	0,15	0,039	**VCM71906-CDLR-T-P4S-XL**
	47	9	15,9	4,1	208	52 000	78 000	0,3	0,15	0,039	**VCM71906-EDLR-T-P4S-XL**
	55	13	14,4	6,4	520	38 000	60 000	1	1	0,1	**HCB7006-CDLR-T-P4S**
	55	13	13,7	6,1	490	34 000	53 000	1	1	0,1	**HCB7006-EDLR-T-P4S**
	55	13	7,8	3,85	310	43 000	67 000	1	1	0,118	**HC7006-EDLR-T-P4S**
	55	13	8,9	3,9	315	48 300	70 600	1	0,6	0,11	**HCM7006-CDLR-T-P4S-XL**
	55	13	8,5	3,7	300	45 900	65 900	1	0,6	0,11	**HCM7006-EDLR-T-P4S-XL**
	55	13	21,4	5,4	275	49 500	77 700	1	0,6	0,11	**VCM7006-CDLR-T-P4S-XL**
	55	13	20,4	5,2	265	47 100	70 600	1	0,6	0,11	**VCM7006-EDLR-T-P4S-XL**

medias *https://www.schaeffler.de/std/1F9A*

[1] The limiting speeds are based on elastically preloaded single bearings.

[2] Explanation of designations SP 1.

[3] L = light preload; M = moderate preload; H = high preload.

[4] Minimal quantity oil lubrication.

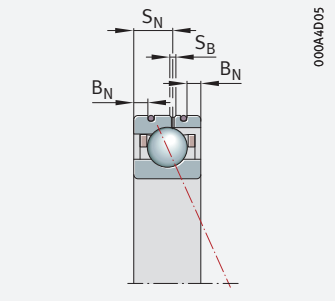

Design DLR

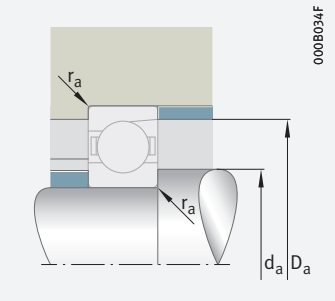

Mounting dimensions

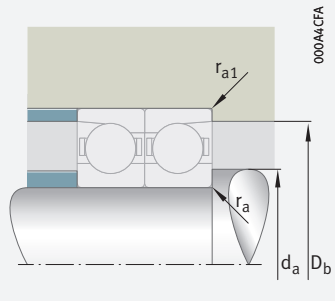

Mounting dimensions

Dimensions				Contact angle	Mounting dimensions				Preload force[3] F_V			Lift-off force[3] K_{aE}			Axial rigidity[3] c_a		
d	B_N	S_N	S_B	α	d_a h12	D_a H12	r_a	r_{a1}	L	M	H	L	M	H	L	M	H
				°			max.	max.	N	N	N	N	N	N	N/µm	N/µm	N/µm
20	2,2	6,6	1,4	15	25	37	0,6	0,3	24	94	202	72	297	673	18,7	32,7	46,6
	2,2	6,6	1,4	25	25	37	0,6	0,3	28	140	321	80	410	966	42	74,7	103
	2,2	6,6	1,4	25	25	37	0,6	0,3	23	70	140	67	204	415	48,8	72,3	93,7
	2,2	6,6	1,4	25	25	37	0,6	0,3	23	70	140	67	204	415	48,8	72,3	93,7
25	1,4	5,35	1	17	29	38,5	0,3	0,15	21	54	114	60	161	348	24	34	45
	1,4	5,35	1	25	29	38,5	0,3	0,15	30	77	161	85	224	472	48	67	88
	1,4	5,35	1	17	29	38,5	0,3	0,15	18	49	102	54	144	310	23	33	45
	1,4	5,35	1	25	29	38,5	0,3	0,15	27	70	145	76	201	422	48	67	87
	2,2	6,6	1,4	15	30	42	0,6	0,3	35	132	283	104	419	944	24,6	42,5	60,2
	2,2	6,6	1,4	25	30	42	0,6	0,3	40	194	443	117	573	1 338	55,4	96,9	133
	2,2	6,6	1,4	25	30	42	0,6	0,3	23	70	140	67	204	415	50,4	74,7	96,7
	1,6	6,95	1	17	30	42	0,6	0,3	24	64	133	70	189	407	24	34	46
	1,6	6,95	1	25	30	42	0,6	0,3	35	91	190	100	264	555	49	69	90
	1,6	6,95	1	17	30	42	0,6	0,3	22	57	119	63	169	362	24	34	46
	1,6	6,95	1	25	30	42	0,6	0,3	31	82	170	90	236	497	49	68	89
30	1,1	5,3	1,4	15	34	43,5	0,3	0,15	14	68	155	40	210	504	21,1	40	58,3
	1,1	5,3	1,4	25	34	43,5	0,3	0,15	22	112	258	60	322	768	52,5	95,1	132
	1,1	5,3	1,4	25	34	43,5	0,3	0,15	24	72	143	69	209	425	52,5	77,7	101
	1,4	5,35	1	17	34	43,5	0,3	0,15	24	62	131	69	186	400	27	38	51
	1,4	5,35	1	25	34	43,5	0,3	0,15	34	89	185	97	257	541	54	76	99
	1,4	5,35	1	17	34	43,5	0,3	0,15	21	56	117	62	166	356	26	38	51
	1,4	5,35	1	25	34	43,5	0,3	0,15	30	80	166	87	230	484	54	75	98
	2,8	7,2	1,4	15	36	49	1	0,3	35	137	293	104	431	976	26,9	47	67,1
	2,8	7,2	1,4	25	36	49	1	0,3	42	203	465	117	592	1 395	60,1	107	147
	2,8	7,2	1,4	25	36	49	1	0,3	33	98	197	94	287	583	60	88,8	115
	2,4	7,4	1	17	36	49	1	0,3	30	79	166	87	235	507	29	42	56
	2,4	7,4	1	25	36	49	1	0,3	43	113	235	124	327	689	59	83	109
	2,4	7,4	1	17	36	49	1	0,3	27	71	148	78	210	450	29	41	55
	2,4	7,4	1	25	36	49	1	0,3	39	102	211	111	293	616	59	83	108

Super precision angular contact ball bearings

Ceramic balls
Steel rings
Design DLR

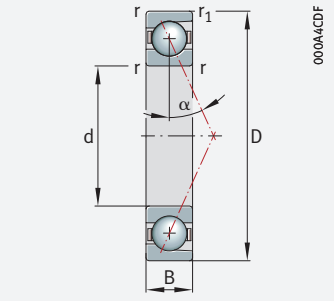

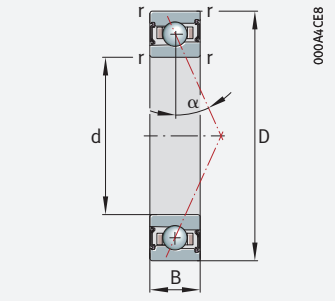

d = 35 – 40 mm

Main dimensions			Basic load ratings		Fatigue limit load	Limiting speeds[1]		Dimensions		Mass	Designation[2]
d	D	B	dyn. C_r	stat. C_{0r}	C_{ur}	n_G grease	n_G oil[4]	r	r_1	m	
			kN	kN	N	min^{-1}	min^{-1}	min.	min.	≈ kg	
35	55	10	12,1	6,5	530	36 000	56 000	0,6	0,6	0,065	**HCB71907-CDLR-T-P4S**
	55	10	11,5	6,2	500	32 000	50 000	0,6	0,6	0,065	**HCB71907-EDLR-T-P4S**
	55	10	6,1	3,45	275	40 000	63 000	0,6	0,6	0,074	**HC71907-EDLR-T-P4S**
	55	10	9,5	4,35	350	45 600	66 700	0,6	0,3	0,061	**HCM71907-CDLR-T-P4S-XL**
	55	10	9,1	4,15	335	43 400	62 300	0,6	0,3	0,061	**HCM71907-EDLR-T-P4S-XL**
	55	10	22,7	6,1	310	46 700	73 400	0,6	0,3	0,061	**VCM71907-CDLR-T-P4S-XL**
	55	10	21,7	5,8	300	44 500	66 700	0,6	0,3	0,061	**VCM71907-EDLR-T-P4S-XL**
	62	14	19,4	9,2	740	34 000	53 000	1	1	0,134	**HCB7007-CDLR-T-P4S**
	62	14	18,5	8,8	710	30 000	45 000	1	1	0,134	**HCB7007-EDLR-T-P4S**
	62	14	8,4	4,5	365	38 000	60 000	1	1	0,162	**HC7007-EDLR-T-P4S**
	62	14	11,3	5	405	42 300	61 900	1	0,6	0,14	**HCM7007-CDLR-T-P4S-XL**
	62	14	10,8	4,85	390	40 300	57 800	1	0,6	0,14	**HCM7007-EDLR-T-P4S-XL**
	62	14	27	7,1	360	43 300	68 100	1	0,6	0,14	**VCM7007-CDLR-T-P4S-XL**
	62	14	26	6,8	345	41 300	61 900	1	0,6	0,14	**VCM7007-EDLR-T-P4S-XL**
40	62	12	18,1	9,4	760	32 000	50 000	0,6	0,6	0,086	**HCB71908-CDLR-T-P4S**
	62	12	17,2	9	720	28 000	45 000	0,6	0,6	0,086	**HCB71908-EDLR-T-P4S**
	62	12	6,4	3,9	315	36 000	56 000	0,6	0,6	0,119	**HC71908-EDLR-T-P4S**
	62	12	11,6	5,4	435	40 200	58 900	0,6	0,3	0,089	**HCM71908-CDLR-T-P4S-XL**
	62	12	11,1	5,1	415	38 300	55 000	0,6	0,3	0,089	**HCM71908-EDLR-T-P4S-XL**
	62	12	28	7,5	385	41 200	64 800	0,6	0,3	0,089	**VCM71908-CDLR-T-P4S-XL**
	62	12	26,5	7,2	365	39 300	58 900	0,6	0,3	0,089	**VCM71908-EDLR-T-P4S-XL**
	68	15	20,9	10,7	860	30 000	45 000	1	1	0,164	**HCB7008-CDLR-T-P4S**
	68	15	19,9	10,2	820	28 000	43 000	1	1	0,164	**HCB7008-EDLR-T-P4S**
	68	15	8,9	5,2	415	34 000	53 000	1	1	0,202	**HC7008-EDLR-T-P4S**
	68	15	11,9	5,7	460	38 000	55 600	1	0,6	0,18	**HCM7008-CDLR-T-P4S-XL**
	68	15	11,4	5,5	440	36 200	51 900	1	0,6	0,18	**HCM7008-EDLR-T-P4S-XL**
	68	15	28,5	8	410	38 900	61 200	1	0,6	0,18	**VCM7008-CDLR-T-P4S-XL**
	68	15	27,5	7,7	390	37 100	55 600	1	0,6	0,18	**VCM7008-EDLR-T-P4S-XL**

medias *https://www.schaeffler.de/std/1F9A*

[1] The limiting speeds are based on elastically preloaded single bearings.

[2] Explanation of designations SP 1.

[3] L = light preload; M = moderate preload; H = high preload.

[4] Minimal quantity oil lubrication.

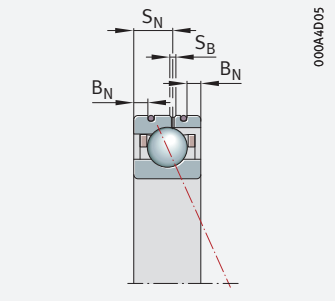

Design DLR

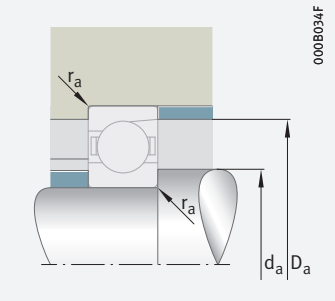

Mounting dimensions

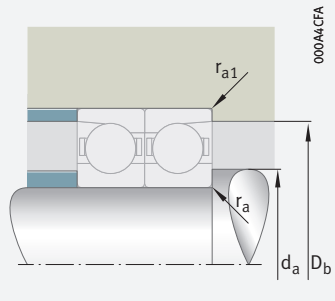

Mounting dimensions

Dimensions				Contact angle	Mounting dimensions				Preload force[3] F_V			Lift-off force[3] K_{aE}			Axial rigidity[3] c_a		
d	B_N	S_N	S_B	α	d_a h12	D_a H12	r_a	r_{a1}	L	M	H	L	M	H	L	M	H
				°			max.	max.	N	N	N	N	N	N	N/µm	N/µm	N/µm
35	1,6	5,8	1,4	15	40	51,5	0,6	0,15	21	96	213	63	301	709	26,7	49,1	71
	1,6	5,8	1,4	25	40	51,5	0,6	0,15	33	158	359	95	463	1 081	66,7	117	161
	1,6	5,8	1,4	25	40	51,5	0,6	0,15	26	78	155	74	226	459	60,5	89,4	116
	2	5,9	1,4	17	40	51,5	0,6	0,15	34	89	186	98	264	569	33	47	63
	2	5,9	1,4	25	40	51,5	0,6	0,15	48	127	264	139	367	773	66	93	121
	2	5,9	1,4	17	40	51,5	0,6	0,15	30	79	166	88	235	506	32	46	62
	2	5,9	1,4	25	40	51,5	0,6	0,15	44	114	237	125	329	692	66	92	120
	2,8	8	1,4	15	41	56	1	0,3	46	175	372	138	558	1 255	32	55,5	78,9
	2,8	8	1,4	25	41	56	1	0,3	54	257	585	157	761	1 771	72,1	126	173
	2,8	8	1,4	25	41	56	1	0,3	35	105	210	101	307	623	67,3	99,5	129
	2,4	8,05	1,4	17	41	56	1	0,3	39	103	217	114	307	663	33	48	64
	2,4	8,05	1,4	25	41	56	1	0,3	57	148	308	162	428	901	68	95	124
	2,4	8,05	1,4	17	41	56	1	0,3	35	93	194	102	274	589	33	47	63
	2,4	8,05	1,4	25	41	56	1	0,3	51	133	276	145	383	806	68	95	123
40	2,2	6,6	1,4	15	45	58,5	0,6	0,15	39	156	337	116	494	1 127	33,5	59,2	84,7
	2,2	6,6	1,4	25	45	58,5	0,6	0,15	41	220	514	117	645	1 548	72,4	132	183
	2,2	6,6	1,4	25	45	58,5	0,6	0,15	27	82	164	78	238	484	66,4	98	127
	2,2	6,9	1,4	17	45	58,5	0,6	0,15	42	110	231	121	327	706	35	51	68
	2,2	6,9	1,4	25	45	58,5	0,6	0,15	60	157	327	172	456	960	72	101	132
	2,2	6,9	1,4	17	45	58,5	0,6	0,15	37	99	207	109	292	628	35	50	67
	2,2	6,9	1,4	25	45	58,5	0,6	0,15	54	141	294	155	408	858	72	100	131
	2,8	8,5	1,4	15	46	62	1	0,3	49	188	402	146	597	1 350	36,1	63,1	89,9
	2,8	8,5	1,4	25	46	62	1	0,3	55	271	622	159	797	1 875	80	142	195
	2,8	8,5	1,4	25	46	62	1	0,3	37	110	221	106	321	652	74,2	110	142
	2,6	8,55	1,4	17	46	62	1	0,3	44	117	245	129	348	751	37	54	72
	2,6	8,55	1,4	25	46	62	1	0,3	64	167	348	183	484	1 020	76	107	139
	2,6	8,55	1,4	17	46	62	1	0,3	40	105	220	116	311	668	37	53	71
	2,6	8,55	1,4	25	46	62	1	0,3	57	150	312	164	434	912	76	106	138

Super precision angular contact ball bearings

Ceramic balls
Steel rings
Design DLR

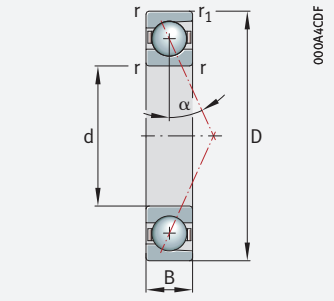

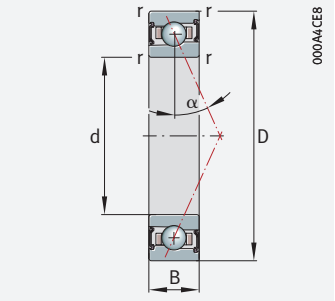

d = 45 – 50 mm

Main dimensions			Basic load ratings		Fatigue limit load	Limiting speeds[1]		Dimensions		Mass	Designation[2]
d	D	B	dyn. C_r	stat. C_{0r}	C_{ur}	n_G grease	n_G oil[4]	r	r_1	m	
			kN	kN	N	min^{-1}	min^{-1}	min.	min.	≈ kg	
45	68	12	19,2	10,7	860	28 000	45 000	0,6	0,6	0,107	**HCB71909-CDLR-T-P4S**
	68	12	18,2	10,2	820	26 000	40 000	0,6	0,6	0,107	**HCB71909-EDLR-T-P4S**
	68	12	9,1	5,4	435	32 000	50 000	0,6	0,6	0,129	**HC71909-EDLR-T-P4S**
	68	12	12,3	6	485	36 300	53 100	0,6	0,3	0,11	**HCM71909-CDLR-T-P4S-XL**
	68	12	11,7	5,8	465	34 600	49 600	0,6	0,3	0,11	**HCM71909-EDLR-T-P4S-XL**
	68	12	29,5	8,5	430	37 200	58 500	0,6	0,3	0,11	**VCM71909-CDLR-T-P4S-XL**
	68	12	28	8,1	415	35 400	53 100	0,6	0,3	0,11	**VCM71909-EDLR-T-P4S-XL**
	75	16	28	14,3	1 150	26 000	40 000	1	1	0,191	**HCB7009-CDLR-T-P4S**
	75	16	26,5	13,6	1 090	24 000	38 000	1	1	0,191	**HCB7009-EDLR-T-P4S**
	75	16	11,6	6,8	550	30 000	48 000	1	1	0,248	**HC7009-EDLR-T-P4S**
	75	16	12,9	6,7	540	33 700	49 200	1	0,6	0,23	**HCM7009-CDLR-T-P4S-XL**
	75	16	12,3	6,4	520	32 000	46 000	1	0,6	0,23	**HCM7009-EDLR-T-P4S-XL**
	75	16	31	9,4	480	34 500	54 100	1	0,6	0,23	**VCM7009-CDLR-T-P4S-XL**
	75	16	29,5	9	455	32 800	49 200	1	0,6	0,23	**VCM7009-EDLR-T-P4S-XL**
50	72	12	19,6	11,4	920	26 000	40 000	0,6	0,6	0,102	**HCB71910-CDLR-T-P4S**
	72	12	18,6	10,8	870	24 000	36 000	0,6	0,6	0,102	**HCB71910-EDLR-T-P4S**
	72	12	9,4	5,8	470	30 000	48 000	0,6	0,6	0,13	**HC71910-EDLR-T-P4S**
	72	12	12,9	6,7	540	33 700	49 200	0,6	0,3	0,11	**HCM71910-CDLR-T-P4S-XL**
	72	12	12,3	6,4	520	32 000	46 000	0,6	0,3	0,11	**HCM71910-EDLR-T-P4S-XL**
	72	12	31	9,4	480	34 500	54 100	0,6	0,3	0,11	**VCM71910-CDLR-T-P4S-XL**
	72	12	29,5	9	455	32 800	49 200	0,6	0,3	0,11	**VCM71910-EDLR-T-P4S-XL**
	80	16	29	15,4	1 240	24 000	38 000	1	1	0,205	**HCB7010-CDLR-T-P4S**
	80	16	27,5	14,7	1 180	22 000	34 000	1	1	0,206	**HCB7010-EDLR-T-P4S**
	80	16	12,1	7,4	600	28 000	43 000	1	1	0,262	**HC7010-EDLR-T-P4S**
	80	16	13,1	7,1	570	31 600	46 200	1	0,6	0,26	**HCM7010-CDLR-T-P4S-XL**
	80	16	12,5	6,7	540	30 000	43 100	1	0,6	0,26	**HCM7010-EDLR-T-P4S-XL**
	80	16	31,5	9,9	500	32 400	50 800	1	0,6	0,26	**VCM7010-CDLR-T-P4S-XL**
	80	16	30	9,4	480	30 800	46 200	1	0,6	0,26	**VCM7010-EDLR-T-P4S-XL**

medias *https://www.schaeffler.de/std/1F9A*

1) The limiting speeds are based on elastically preloaded single bearings.
2) Explanation of designations SP 1.
3) L = light preload; M = moderate preload; H = high preload.
4) Minimal quantity oil lubrication.

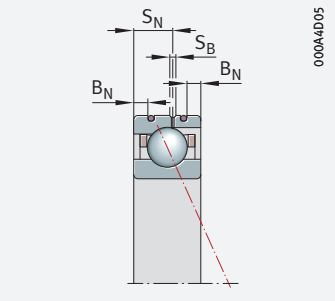

Design DLR

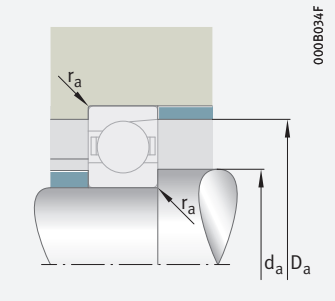

Mounting dimensions

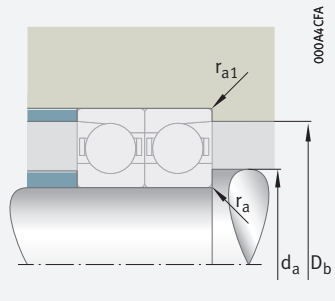

Mounting dimensions

Dimensions				Contact angle	Mounting dimensions				Preload force[3] F_V			Lift-off force[3] K_{aE}			Axial rigidity[3] c_a		
d	B_N	S_N	S_B	α	d_a h12	D_a H12	r_a	r_{a1}	L	M	H	L	M	H	L	M	H
				°			max.	max.	N	N	N	N	N	N	N/µm	N/µm	N/µm
45	2,2	6,6	1,4	15	50	63,5	0,6	0,15	40	164	355	120	516	1 182	36,2	64,1	91,7
	2,2	6,6	1,4	25	50	63,5	0,6	0,15	42	233	547	121	682	1 643	78,5	144	200
	2,2	6,6	1,4	25	50	63,5	0,6	0,15	38	113	226	108	329	667	76,6	113	146
	2,2	6,9	1,4	17	50	63,5	0,6	0,15	47	124	260	136	368	795	39	57	76
	2,2	6,9	1,4	25	50	63,5	0,6	0,15	68	177	368	194	512	1 078	80	112	146
	2,2	6,9	1,4	17	50	63,5	0,6	0,15	42	111	232	122	329	707	39	56	75
	2,2	6,9	1,4	25	50	63,5	0,6	0,15	61	159	330	174	459	964	80	111	145
	3,4	9,3	1,4	15	51	69	1	0,3	71	261	549	212	827	1 843	41,9	71,9	102
	3,4	9,3	1,4	25	51	69	1	0,3	89	389	869	254	1 145	2 622	95,8	163	223
	3,4	9,3	1,4	25	51	69	1	0,3	48	143	286	137	417	848	84,4	125	161
	2,6	9,3	1,4	17	51	69	1	0,3	52	137	288	151	408	881	43	62	84
	2,6	9,3	1,4	25	51	69	1	0,3	75	196	407	214	567	1 194	88	123	161
	2,6	9,3	1,4	17	51	69	1	0,3	47	123	258	135	364	784	43	62	82
	2,6	9,3	1,4	25	51	69	1	0,3	67	176	365	192	508	1 068	88	123	160
50	2,2	6,6	1,4	15	55	67,5	0,6	0,15	41	167	362	121	525	1 205	37,5	66,4	95
	2,2	6,6	1,4	25	55	67,5	0,6	0,15	40	229	542	115	671	1 626	79,7	148	205
	2,2	6,6	1,4	25	55	67,5	0,6	0,15	39	116	231	110	336	682	80,9	119	154
	2,2	7	1,4	17	55	67,5	0,6	0,15	52	137	288	151	408	881	43	62	84
	2,2	7	1,4	25	55	67,5	0,6	0,15	75	196	407	214	567	1 194	88	123	161
	2,2	7	1,4	17	55	67,5	0,6	0,15	47	123	258	135	364	784	43	62	82
	2,2	7	1,4	25	55	67,5	0,6	0,15	67	176	365	192	508	1 068	88	123	160
	3,4	9,3	1,4	15	56	74	1	0,3	73	268	566	217	848	1 894	43,9	75,3	107
	3,4	9,3	1,4	25	56	74	1	0,3	90	400	895	259	1 175	2 697	100	171	234
	3,4	9,3	1,4	25	56	74	1	0,3	50	149	298	143	435	883	90	133	172
	2,6	9,3	1,4	17	56	74	1	0,3	55	144	303	159	430	928	45	65	88
	2,6	9,3	1,4	25	56	74	1	0,3	79	206	429	225	596	1 257	92	129	169
	2,6	9,3	1,4	17	56	74	1	0,3	49	129	271	143	384	825	45	64	86
	2,6	9,3	1,4	25	56	74	1	0,3	71	185	385	202	534	1 124	92	128	167

Super precision angular contact ball bearings

Ceramic balls
Steel rings
Design DLR

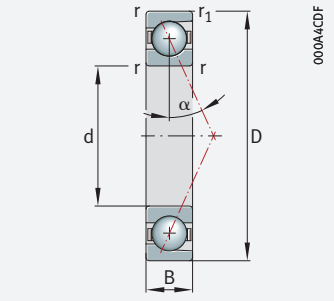

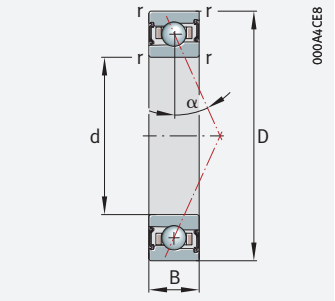

d = 55 – 60 mm

Main dimensions			Basic load ratings		Fatigue limit load	Limiting speeds[1]		Dimensions		Mass	Designation[2]
d	D	B	dyn. C_r	stat. C_{0r}	C_{ur}	n_G grease	n_G oil[4]	r	r_1	m	
			kN	kN	N	min^{-1}	min^{-1}	min.	min.	≈ kg	
55	80	13	23,5	13,8	1 110	24 000	36 000	1	1	0,14	**HCB71911-CDLR-T-P4S**
	80	13	22,3	13,1	1 060	22 000	32 000	1	1	0,14	**HCB71911-EDLR-T-P4S**
	80	13	12,3	7,7	620	28 000	43 000	1	1	0,166	**HC71911-EDLR-T-P4S**
	80	13	18,5	9,5	760	30 400	44 500	1	0,6	0,13	**HCM71911-CDLR-T-P4S-XL**
	80	13	17,7	9,1	730	28 900	41 500	1	0,6	0,13	**HCM71911-EDLR-T-P4S-XL**
	80	13	44,5	13,3	680	31 200	48 900	1	0,6	0,13	**VCM71911-CDLR-T-P4S-XL**
	80	13	42,5	12,7	650	29 700	44 500	1	0,6	0,13	**VCM71911-EDLR-T-P4S-XL**
	90	18	39	21,2	1 710	22 000	34 000	1,1	1,1	0,302	**HCB7011-CDLR-T-P4S**
	90	18	37	20,1	1 620	20 000	30 000	1,1	1,1	0,302	**HCB7011-EDLR-T-P4S**
	90	18	17	10,4	840	26 000	40 000	1,1	1,1	0,378	**HC7011-EDLR-T-P4S**
	90	18	19,5	10,5	850	28 300	41 400	1,1	0,6	0,36	**HCM7011-CDLR-T-P4S-XL**
	90	18	18,6	10	810	26 900	38 700	1,1	0,6	0,36	**HCM7011-EDLR-T-P4S-XL**
	90	18	46,5	14,7	750	29 000	45 600	1,1	0,6	0,36	**VCM7011-CDLR-T-P4S-XL**
	90	18	44,5	14	720	27 600	41 400	1,1	0,6	0,36	**VCM7011-EDLR-T-P4S-XL**
60	85	13	24,7	15,3	1 230	22 000	34 000	1	1	0,151	**HCB71912-CDLR-T-P4S**
	85	13	23,4	14,5	1 170	20 000	30 000	1	1	0,151	**HCB71912-EDLR-T-P4S**
	85	13	12,7	8,3	670	26 000	40 000	1	1	0,18	**HC71912-EDLR-T-P4S**
	85	13	19,5	10,5	850	28 300	41 400	1	0,6	0,14	**HCM71912-CDLR-T-P4S-XL**
	85	13	18,6	10	810	26 900	38 700	1	0,6	0,14	**HCM71912-EDLR-T-P4S-XL**
	85	13	46,5	14,7	750	29 000	45 600	1	0,6	0,14	**VCM71912-CDLR-T-P4S-XL**
	85	13	44,5	14	720	27 600	41 400	1	0,6	0,14	**VCM71912-EDLR-T-P4S-XL**
	95	18	40	22,7	1 830	20 000	32 000	1,1	1,1	0,326	**HCB7012-CDLR-T-P4S**
	95	18	38	21,6	1 740	19 000	28 000	1,1	1,1	0,326	**HCB7012-EDLR-T-P4S**
	95	18	17,6	11,3	910	24 000	36 000	1,1	1,1	0,404	**HC7012-EDLR-T-P4S**
	95	18	19,8	11,1	890	26 500	38 800	1,1	0,6	0,39	**HCM7012-CDLR-T-P4S-XL**
	95	18	18,9	10,6	850	25 200	36 200	1,1	0,6	0,39	**HCM7012-EDLR-T-P4S-XL**
	95	18	47,5	15,5	790	27 100	42 600	1,1	0,6	0,39	**VCM7012-CDLR-T-P4S-XL**
	95	18	45,5	14,8	750	25 900	38 800	1,1	0,6	0,39	**VCM7012-EDLR-T-P4S-XL**

medias *https://www.schaeffler.de/std/1F9A*

[1] The limiting speeds are based on elastically preloaded single bearings.

[2] Explanation of designations SP 1.

[3] L = light preload; M = moderate preload; H = high preload.

[4] Minimal quantity oil lubrication.

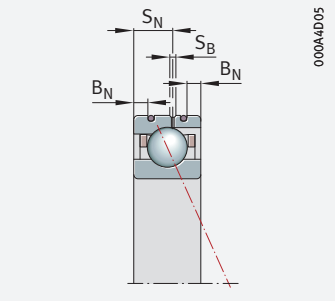

Design DLR

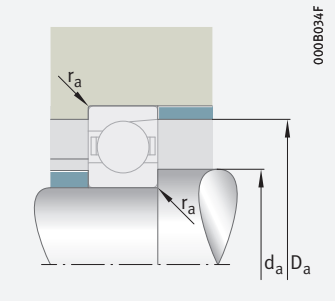

Mounting dimensions

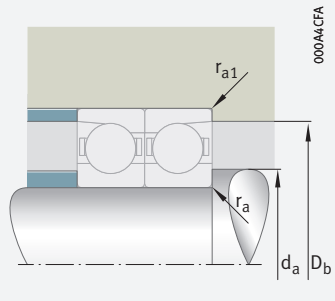

Mounting dimensions

Dimensions				Contact angle	Mounting dimensions				Preload force[3] F_V			Lift-off force[3] K_{aE}			Axial rigidity[3] c_a		
d	B_N	S_N	S_B	α	d_a h12	D_a H12	r_a	r_{a1}	L	M	H	L	M	H	L	M	H
				°			max.	max.	N	N	N	N	N	N	N/µm	N/µm	N/µm
55	2,8	7,2	1,4	15	60	75,5	0,6	0,3	53	208	447	157	654	1 487	42,4	74,1	106
	2,8	7,2	1,4	25	60	75,5	0,6	0,3	57	296	686	164	867	2 058	93	167	230
	2,8	7,2	1,4	25	60	75,5	0,6	0,3	51	152	304	145	442	897	92,7	137	177
	2,8	7,6	1,4	17	60	75,5	0,6	0,3	73	194	406	213	576	1 243	49	71	95
	2,8	7,6	1,4	25	60	75,5	0,6	0,3	106	277	575	303	801	1 687	100	140	183
	2,8	7,6	1,4	17	60	75,5	0,6	0,3	66	174	363	191	514	1 105	49	70	94
	2,8	7,6	1,4	25	60	75,5	0,6	0,3	95	249	516	272	718	1 509	100	139	182
	4,3	9,7	1,4	15	62	83	1	0,6	102	366	765	305	1 158	2 559	51,9	87,9	124
	4,3	9,7	1,4	25	62	83	1	0,6	136	562	1 236	390	1 653	3 728	121	203	275
	4,3	9,7	1,4	25	62	83	1	0,6	70	210	421	201	613	1 244	105	155	201
	2,8	10,15	1,4	17	62	83	1	0,6	81	214	450	236	638	1 378	54	78	105
	2,8	10,15	1,4	25	62	83	1	0,6	117	306	637	335	887	1 869	110	154	201
	2,8	10,15	1,4	17	62	83	1	0,6	73	192	403	212	570	1 225	54	77	103
	2,8	10,15	1,4	25	62	83	1	0,6	105	275	572	301	794	1 671	109	153	200
60	2,8	7,2	1,4	15	65	80,5	0,6	0,3	54	214	462	159	671	1 530	45,1	79	112
	2,8	7,2	1,4	25	65	80,5	0,6	0,3	57	303	707	163	887	2 118	98,5	179	246
	2,8	7,2	1,4	25	65	80,5	0,6	0,3	52	155	311	148	452	917	97,7	144	186
	2,8	7,6	1,4	17	65	80,5	0,6	0,3	81	214	450	236	638	1 378	54	78	105
	2,8	7,6	1,4	25	65	80,5	0,6	0,3	117	306	637	335	887	1 869	110	154	201
	2,8	7,6	1,4	17	65	80,5	0,6	0,3	73	192	403	212	570	1 225	54	77	103
	2,8	7,6	1,4	25	65	80,5	1	0,6	105	275	572	301	794	1 671	109	153	200
	4,3	9,7	1,4	15	67	88	1	0,6	106	379	794	315	1 198	2 651	54,4	92,2	130
	4,3	9,7	1,4	25	67	88	1	0,6	136	569	1 256	391	1 673	3 782	126	211	286
	4,3	9,7	1,4	25	67	88	1	0,6	73	219	438	209	638	1 294	112	165	213
	2,8	10,15	1,4	17	67	88	1	0,6	86	226	474	249	673	1 453	57	81	110
	2,8	10,15	1,4	25	67	88	1	0,6	123	323	671	353	934	1 968	115	161	211
	2,8	10,15	1,4	17	67	88	1	0,6	77	203	424	223	601	1 292	56	81	108
	2,8	10,15	1,4	25	67	88	1	0,6	111	290	602	317	837	1 760	115	160	209

Super precision angular contact ball bearings

Ceramic balls
Steel rings
Design DLR

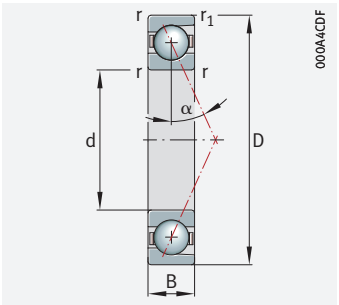

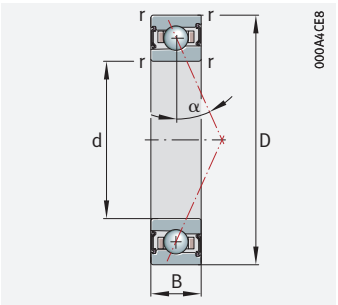

d = 65 – 70 mm

Main dimensions			Basic load ratings		Fatigue limit load	Limiting speeds[1]		Dimensions		Mass	Designation[2]
d	D	B	dyn. C_r	stat. C_{0r}	C_{ur}	n_G grease	n_G oil[4]	r	r_1	m	
			kN	kN	N	min^{-1}	min^{-1}	min.	min.	≈ kg	
65	90	13	25	16,1	1 300	20 000	32 000	1	1	0,161	**HCB71913-CDLR-T-P4S**
	90	13	23,8	15,3	1 230	19 000	28 000	1	1	0,161	**HCB71913-EDLR-T-P4S**
	90	13	13	8,9	720	24 000	36 000	1	1	0,19	**HC71913-EDLR-T-P4S**
	90	13	19,8	11,1	890	26 500	38 800	1	0,6	0,15	**HCM71913-CDLR-T-P4S-XL**
	90	13	18,9	10,6	850	25 200	36 200	1	0,6	0,15	**HCM71913-EDLR-T-P4S-XL**
	90	13	47,5	15,5	790	27 100	42 600	1	0,6	0,15	**VCM71913-CDLR-T-P4S-XL**
	90	13	45,5	14,8	750	25 900	38 800	1	0,6	0,15	**VCM71913-EDLR-T-P4S-XL**
	100	18	41,5	24,3	1 960	19 000	30 000	1,1	1,1	0,343	**HCB7013-CDLR-T-P4S**
	100	18	39,5	23,1	1 860	17 000	26 000	1,1	1,1	0,344	**HCB7013-EDLR-T-P4S**
	100	18	18,2	12,2	980	22 000	34 000	1,1	1,1	0,427	**HC7013-EDLR-T-P4S**
	100	18	20,1	11,6	940	24 900	36 400	1,1	0,6	0,41	**HCM7013-CDLR-T-P4S-XL**
	100	18	19,2	11,1	890	23 700	34 000	1,1	0,6	0,41	**HCM7013-EDLR-T-P4S-XL**
	100	18	48	16,3	830	25 500	40 000	1,1	0,6	0,41	**VCM7013-CDLR-T-P4S-XL**
	100	18	46	15,5	790	24 300	36 400	1,1	0,6	0,41	**VCM7013-EDLR-T-P4S-XL**
70	100	16	34,5	22	1 770	19 000	28 000	1	1	0,268	**HCB71914-CDLR-T-P4S**
	100	16	32,5	20,8	1 680	17 000	26 000	1	1	0,268	**HCB71914-EDLR-T-P4S**
	100	16	16,8	11,7	940	22 000	34 000	1	1	0,322	**HC71914-EDLR-T-P4S**
	100	16	27	15	1 210	24 200	35 300	1	0,6	0,25	**HCM71914-CDLR-T-P4S-XL**
	100	16	26	14,3	1 150	23 000	33 000	1	0,6	0,25	**HCM71914-EDLR-T-P4S-XL**
	100	16	65	21	1 070	24 800	38 900	1	0,6	0,25	**VCM71914-CDLR-T-P4S-XL**
	100	16	62	20,1	1 020	23 600	35 300	1	0,6	0,25	**VCM71914-EDLR-T-P4S-XL**
	110	20	50	29,5	2 360	18 000	28 000	1,1	1,1	0,48	**HCB7014-CDLR-T-P4S**
	110	20	48	28	2 240	16 000	24 000	1,1	1,1	0,48	**HCB7014-EDLR-T-P4S**
	110	20	23,7	15,6	1 260	20 000	32 000	1,1	1,1	0,596	**HC7014-EDLR-T-P4S**
	110	20	27,5	15,8	1 270	22 800	33 400	1,1	0,6	0,56	**HCM7014-CDLR-T-P4S-XL**
	110	20	26,5	15,1	1 210	21 700	31 200	1,1	0,6	0,56	**HCM7014-EDLR-T-P4S-XL**
	110	20	66	22,1	1 130	23 400	36 700	1,1	0,6	0,56	**VCM7014-CDLR-T-P4S-XL**
	110	20	63	21,1	1 080	22 300	33 400	1,1	0,6	0,56	**VCM7014-EDLR-T-P4S-XL**

medias *https://www.schaeffler.de/std/1F9A*

[1] The limiting speeds are based on elastically preloaded single bearings.

[2] Explanation of designations SP 1.

[3] L = light preload; M = moderate preload; H = high preload.

[4] Minimal quantity oil lubrication.

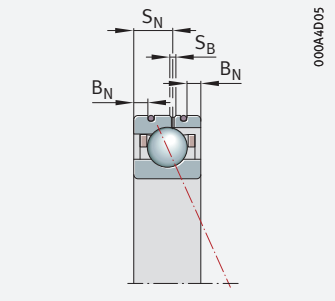

Design DLR

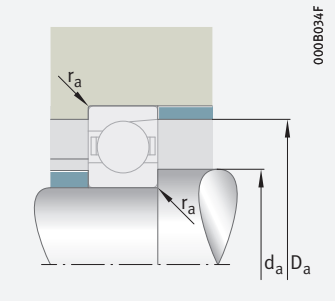

Mounting dimensions

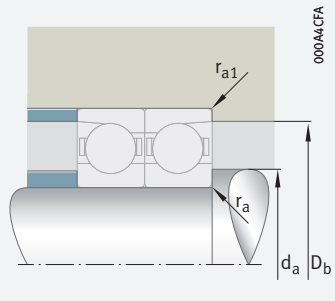

Mounting dimensions

Dimensions				Contact angle	Mounting dimensions				Preload force[3] F_V			Lift-off force[3] K_{aE}			Axial rigidity[3] c_a		
d	B_N	S_N	S_B	α	d_a h12	D_a H12	r_a	r_{a1}	L	M	H	L	M	H	L	M	H
				°			max.	max.	N	N	N	N	N	N	N/µm	N/µm	N/µm
65	2,8	7,2	1,4	15	70	85,5	0,6	0,3	55	219	473	161	684	1 562	46,6	81,7	116
	2,8	7,2	1,4	25	70	85,5	0,6	0,3	58	309	723	165	904	2 165	102	185	255
	2,8	7,2	1,4	25	70	85,5	0,6	0,3	53	160	321	153	466	946	103	152	196
	2,8	7,6	1,4	17	70	85,5	0,6	0,3	86	226	474	249	673	1 453	57	81	110
	2,8	7,6	1,4	25	70	85,5	0,6	0,3	123	323	671	353	934	1 968	115	161	211
	2,8	7,6	1,4	17	70	85,5	0,6	0,3	77	203	424	223	601	1 292	56	81	108
	2,8	7,6	1,4	25	70	85,5	1	0,6	111	290	602	317	837	1 760	115	160	209
	4	10,4	1,4	15	72	93	1	0,6	107	385	808	318	1 213	2 688	56,4	95,6	135
	4	10,4	1,4	25	72	93	1	0,6	137	577	1 276	392	1 694	3 836	131	219	297
	4	10,4	1,4	25	72	93	1	0,6	74	223	445	213	647	1 313	118	173	224
	2,8	10,4	1,4	17	72	93	1	0,6	90	237	498	262	707	1 528	59	85	115
	2,8	10,4	1,4	25	72	93	1	0,6	129	339	705	371	981	2 067	120	169	220
	2,8	10,4	1,4	17	72	93	1	0,6	81	213	446	234	631	1 358	59	84	113
	2,8	10,4	1,4	25	72	93	1	0,6	116	304	632	333	879	1 849	120	168	218
70	3,1	9,3	1,4	15	76	94,5	0,6	0,3	83	312	665	245	980	2 200	55,5	95,3	135
	3,1	9,3	1,4	25	76	94,5	0,6	0,3	98	459	1 040	281	1 343	3 118	126	218	298
	3,1	9,3	1,4	25	76	94,5	0,6	0,3	69	207	414	198	602	1 221	117	173	223
	2,8	9,3	1,4	17	76	94,5	0,6	0,3	116	306	641	337	910	1 965	65	93	125
	2,8	9,3	1,4	25	76	94,5	0,6	0,3	167	437	909	478	1 265	2 665	132	184	241
	2,8	9,3	1,4	17	76	94,5	0,6	0,3	104	274	574	302	812	1 747	64	92	123
	2,8	9,3	1,4	25	76	94,5	0,6	0,3	150	393	816	429	1 133	2 383	131	183	239
	4	11,6	1,4	15	77	102	1	0,6	139	487	1 014	414	1 538	3 380	62,3	105	147
	4	11,6	1,4	25	77	102	1	0,6	188	749	1 633	540	2 203	4 915	147	242	326
	4	11,6	1,4	25	77	102	1	0,6	98	293	587	280	853	1 731	130	192	248
	3	11,6	1,4	17	77	102	1	0,6	122	322	675	355	958	2 069	68	97	131
	3	11,6	1,4	25	77	102	1	0,6	176	460	956	503	1 331	2 804	138	193	252
	3	11,6	1,4	17	77	102	1	0,6	110	289	605	318	855	1 839	67	96	129
	3	11,6	1,4	25	77	102	1,1	0,6	158	413	858	451	1 192	2 508	137	192	250

Super precision angular contact ball bearings

Ceramic balls
Steel rings
Design DLR

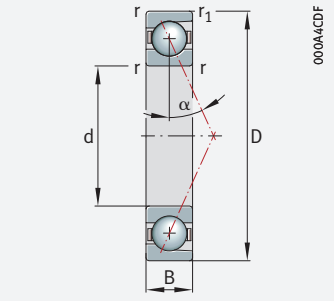

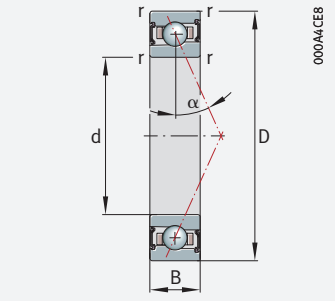

d = 75 – 80 mm

Main dimensions			Basic load ratings		Fatigue limit load	Limiting speeds[1]		Dimensions		Mass	Designation[2]
d	D	B	dyn. C_r	stat. C_{0r}	C_{ur}	n_G grease	n_G oil[4]	r	r_1	m	
			kN	kN	N	min^{-1}	min^{-1}	min.	min.	≈ kg	
75	105	16	35	23,1	1 860	18 000	28 000	1	1	0,277	**HCB71915-CDLR-T-P4S**
	105	16	33	21,9	1 770	16 000	24 000	1	1	0,277	**HCB71915-EDLR-T-P4S**
	105	16	17,3	12,5	1 000	20 000	32 000	1	1	0,345	**HC71915-EDLR-T-P4S**
	105	16	27,5	15,8	1 270	22 800	33 400	1	0,6	0,27	**HCM71915-CDLR-T-P4S-XL**
	105	16	26,5	15,1	1 210	21 700	31 200	1	0,6	0,27	**HCM71915-EDLR-T-P4S-XL**
	105	16	66	22,1	1 130	23 400	36 700	1	0,6	0,27	**VCM71915-CDLR-T-P4S-XL**
	105	16	63	21,1	1 080	22 300	33 400	1	0,6	0,27	**VCM71915-EDLR-T-P4S-XL**
	115	20	52	31,5	2 500	17 000	26 000	1,1	1,1	0,5	**HCB7015-CDLR-T-P4S**
	115	20	49,5	29,5	2 390	15 000	24 000	1,1	1,1	0,5	**HCB7015-EDLR-T-P4S**
	115	20	24	16,2	1 310	19 000	30 000	1,1	1,1	0,624	**HC7015-EDLR-T-P4S**
	115	20	28	16,6	1 330	21 600	31 600	1,1	0,6	0,59	**HCM7015-CDLR-T-P4S-XL**
	115	20	27	15,8	1 270	20 600	29 500	1,1	0,6	0,59	**HCM7015-EDLR-T-P4S-XL**
	115	20	67	23,2	1 180	22 200	34 800	1,1	0,6	0,59	**VCM7015-CDLR-T-P4S-XL**
	115	20	64	22,1	1 130	21 100	31 600	1,1	0,6	0,59	**VCM7015-EDLR-T-P4S-XL**
80	110	16	36	24,3	1 960	17 000	26 000	1	1	0,295	**HCB71916-CDLR-T-P4S**
	110	16	34	23	1 850	15 000	24 000	1	1	0,295	**HCB71916-EDLR-T-P4S**
	110	16	19,2	14	1 130	19 000	30 000	1	1	0,342	**HC71916-EDLR-T-P4S**
	110	16	28	16,6	1 330	21 600	31 600	1	0,6	0,28	**HCM71916-CDLR-T-P4S-XL**
	110	16	27	15,8	1 270	20 600	29 500	1	0,6	0,28	**HCM71916-EDLR-T-P4S-XL**
	110	16	67	23,2	1 180	22 200	34 800	1	0,6	0,28	**VCM71916-CDLR-T-P4S-XL**
	110	16	64	22,1	1 130	21 100	31 600	1	0,6	0,28	**VCM71916-EDLR-T-P4S-XL**
	125	22	65	39	3 100	15 000	24 000	1,1	1,1	0,69	**HCB7016-CDLR-T-P4S**
	125	22	61	37,5	2 950	14 000	22 000	1,1	1,1	0,69	**HCB7016-EDLR-T-P4S**
	125	22	28,5	19,7	1 570	18 000	28 000	1,1	1,1	0,86	**HC7016-EDLR-T-P4S**
	125	22	34	21,8	1 730	20 000	29 300	1,1	0,6	0,81	**HCM7016-CDLR-T-P4S-XL**
	125	22	32,5	20,8	1 660	19 100	27 400	1,1	0,6	0,81	**HCM7016-EDLR-T-P4S-XL**
	125	22	82	30,5	1 540	20 500	31 900	1,1	0,6	0,81	**VCM7016-CDLR-T-P4S-XL**
	125	22	78	29	1 470	19 600	29 300	1,1	0,6	0,81	**VCM7016-EDLR-T-P4S-XL**

medias *https://www.schaeffler.de/std/1F9A*

[1] The limiting speeds are based on elastically preloaded single bearings.

[2] Explanation of designations SP 1.

[3] L = light preload; M = moderate preload; H = high preload.

[4] Minimal quantity oil lubrication.

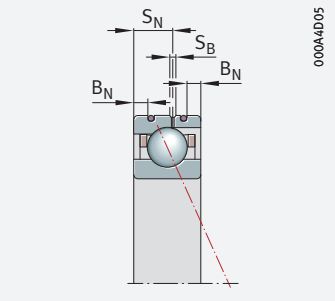

Design DLR

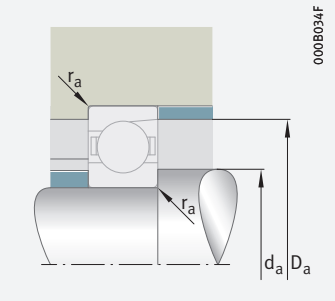

Mounting dimensions

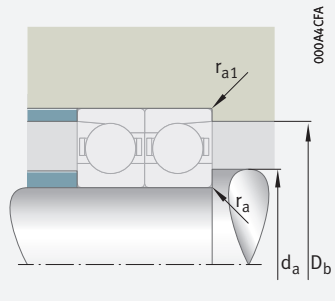

Mounting dimensions

Dimensions				Contact angle	Mounting dimensions				Preload force[3] F_V			Lift-off force[3] K_{aE}			Axial rigidity[3] c_a		
d	B_N	S_N	S_B	α	d_a h12	D_a H12	r_a	r_{a1}	L	M	H	L	M	H	L	M	H
				°			max.	max.	N	N	N	N	N	N	N/µm	N/µm	N/µm
75	3,1	9,3	1,4	15	81	99,5	0,6	0,3	83	317	676	247	991	2 229	57,1	98,2	139
	3,1	9,3	1,4	25	81	99,5	0,6	0,3	95	454	1 034	273	1 328	3 094	128	223	305
	3,1	9,3	1,4	25	81	99,5	0,6	0,3	70	210	421	201	611	1 240	123	181	233
	2,8	9,3	1,4	17	81	99,5	0,6	0,3	122	322	675	355	958	2 069	68	97	131
	2,8	9,3	1,4	25	81	99,5	0,6	0,3	176	460	956	503	1 331	2 804	138	193	252
	2,8	9,3	1,4	17	81	99,5	0,6	0,3	110	289	605	318	855	1 839	67	96	129
	2,8	9,3	1,4	25	81	99,5	0,6	0,3	158	413	858	451	1 192	2 508	137	192	250
	4	11,6	1,4	15	82	107	1	0,6	145	508	1 059	431	1 603	3 524	65,4	110	154
	4	11,6	1,4	25	82	107	1	0,6	192	769	1 679	551	2 260	5 050	153	253	341
	4	11,6	1,4	25	82	107	1	0,6	99	298	597	285	868	1 761	134	197	255
	3	11,6	1,4	17	82	107	1	0,6	128	338	709	373	1 006	2 173	71	102	137
	3	11,6	1,4	25	82	107	1	0,6	184	483	1 003	528	1 396	2 943	144	202	263
	3	11,6	1,4	17	82	107	1	0,6	115	303	635	334	898	1 932	70	101	135
	3	11,6	1,4	25	82	107	1	0,6	166	433	900	474	1 251	2 632	143	200	261
80	3,1	9,3	1,4	15	86	104	0,6	0,3	84	321	686	249	1 004	2 259	58,8	101	143
	3,1	9,3	1,4	25	86	104	0,6	0,3	95	459	1 049	273	1 344	3 137	132	230	315
	3,1	9,3	1,4	25	86	104	0,6	0,3	79	236	473	226	686	1 392	130	192	248
	2,8	9,3	1,4	17	86	104	0,6	0,3	128	338	709	373	1 006	2 173	71	102	137
	2,8	9,3	1,4	25	86	104	0,6	0,3	184	483	1 003	528	1 396	2 943	144	202	263
	2,8	9,3	1,4	17	86	104	0,6	0,3	115	303	635	334	898	1 932	70	101	135
	2,8	9,3	1,4	25	86	104	0,6	0,3	166	433	900	474	1 251	2 632	143	200	261
	4,7	12,2	2,2	15	88	117	1	0,6	186	640	1 327	554	2 020	4 415	74	123	173
	4,7	12,2	2,2	25	88	117	1	0,6	252	977	2 113	726	2 872	6 354	175	284	383
	4,7	12,2	2,2	25	88	117	1	0,6	117	352	704	336	1 023	2 075	146	215	278
	3,3	12,35	2,2	17	88	117	1	0,6	169	447	941	495	1 348	2 936	81	118	161
	3,3	12,35	2,2	25	88	117	1	0,6	243	638	1 328	698	1 855	3 929	164	231	304
	3,3	12,35	2,2	17	88	117	1	0,6	152	401	842	443	1 200	2 604	81	117	158
	3,3	12,35	2,2	25	88	117	1,1	0,6	218	572	1 191	627	1 661	3 509	163	230	301

Super precision angular contact ball bearings

Ceramic balls
Steel rings
Design DLR

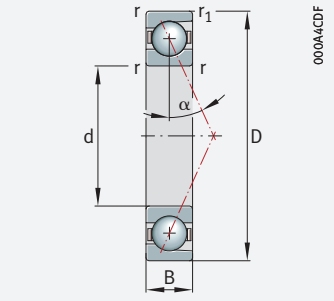

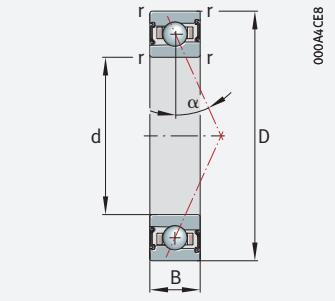

d = 85 – 90 mm

Main dimensions			Basic load ratings		Fatigue limit load	Limiting speeds[1]		Dimensions		Mass	Designation[2]
d	D	B	dyn. C_r	stat. C_{0r}	C_{ur}	n_G grease	n_G oil[4]	r	r_1	m	
			kN	kN	N	min^{-1}	min^{-1}	min.	min.	≈ kg	
85	120	18	47	32	2 550	15 000	24 000	1,1	1,1	0,43	**HCB71917-CDLR-T-P4S**
	120	18	44,5	30	2 410	14 000	22 000	1,1	1,1	0,43	**HCB71917-EDLR-T-P4S**
	120	18	20	15,3	1 220	18 000	28 000	1,1	1,1	0,535	**HC71917-EDLR-T-P4S**
	120	18	31,5	18,5	1 470	20 000	29 300	1,1	0,6	0,43	**HCM71917-CDLR-T-P4S-XL**
	120	18	30	17,6	1 400	19 100	27 400	1,1	0,6	0,43	**HCM71917-EDLR-T-P4S-XL**
	120	18	75	26	1 300	20 500	32 200	1,1	0,6	0,43	**VCM71917-CDLR-T-P4S-XL**
	120	18	72	24,7	1 240	19 600	29 300	1,1	0,6	0,43	**VCM71917-EDLR-T-P4S-XL**
	130	22	67	41,5	3 250	15 000	22 000	1,1	1,1	0,72	**HCB7017-CDLR-T-P4S**
	130	22	63	39,5	3 100	13 000	20 000	1,1	1,1	0,72	**HCB7017-EDLR-T-P4S**
	130	22	29	20,5	1 590	17 000	26 000	1,1	1,1	0,893	**HC7017-EDLR-T-P4S**
	130	22	35,5	23,8	1 850	19 100	28 000	1,1	0,6	0,85	**HCM7017-CDLR-T-P4S-XL**
	130	22	34	22,7	1 760	18 200	26 100	1,1	0,6	0,85	**HCM7017-EDLR-T-P4S-XL**
	130	22	85	33,5	1 640	19 600	29 100	1,1	0,6	0,85	**VCM7017-CDLR-T-P4S-XL**
	130	22	81	32	1 560	18 700	28 000	1,1	0,6	0,85	**VCM7017-EDLR-T-P4S-XL**
90	125	18	48	33,5	2 600	15 000	22 000	1,1	1,1	0,445	**HCB71918-CDLR-T-P4S**
	125	18	45,5	31,5	2 470	13 000	20 000	1,1	1,1	0,445	**HCB71918-EDLR-T-P4S**
	125	18	22	16,9	1 310	17 000	26 000	1,1	1,1	0,55	**HC71918-EDLR-T-P4S**
	125	18	33	20,1	1 560	19 100	28 000	1,1	0,6	0,45	**HCM71918-CDLR-T-P4S-XL**
	125	18	31,5	19,2	1 490	18 200	26 100	1,1	0,6	0,45	**HCM71918-EDLR-T-P4S-XL**
	125	18	79	28	1 390	19 600	30 600	1,1	0,6	0,45	**VCM71918-CDLR-T-P4S-XL**
	125	18	75	27	1 320	18 700	28 000	1,1	0,6	0,45	**VCM71918-EDLR-T-P4S-XL**
	140	24	78	49	3 700	14 000	22 000	1,5	1,5	0,93	**HCB7018-CDLR-T-P4S**
	140	24	74	46,5	3 500	12 000	19 000	1,5	1,5	0,93	**HCB7018-EDLR-T-P4S**
	140	24	34	24	1 810	16 000	24 000	1,5	1,5	1,17	**HC7018-EDLR-T-P4S**
	140	24	39,5	26,5	1 980	17 900	26 100	1,5	1	1,1	**HCM7018-CDLR-T-P4S-XL**
	140	24	37,5	25	1 890	17 000	24 400	1,5	1	1,1	**HCM7018-EDLR-T-P4S-XL**
	140	24	95	37	1 750	18 300	27 600	1,5	1	1,1	**VCM7018-CDLR-T-P4S-XL**
	140	24	90	35	1 670	17 400	26 100	1,5	1	1,1	**VCM7018-EDLR-T-P4S-XL**

medias *https://www.schaeffler.de/std/1F9A*

[1] The limiting speeds are based on elastically preloaded single bearings.

[2] Explanation of designations SP 1.

[3] L = light preload; M = moderate preload; H = high preload.

[4] Minimal quantity oil lubrication.

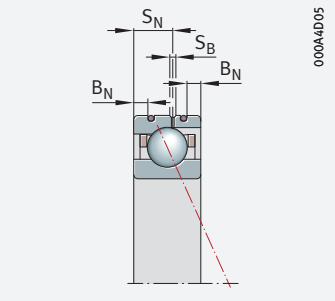

Design DLR

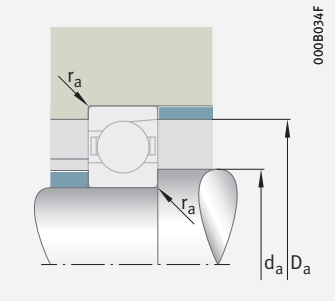

Mounting dimensions

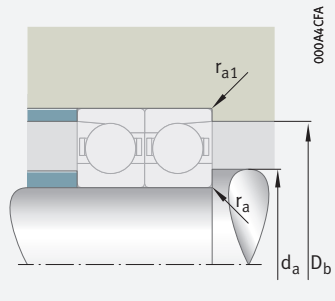

Mounting dimensions

Dimensions				Contact angle	Mounting dimensions				Preload force[3] F_V			Lift-off force[3] K_{aE}			Axial rigidity[3] c_a		
d	B_N	S_N	S_B	α	d_a h12	D_a H12	r_a	r_{a1}	L	M	H	L	M	H	L	M	H
				°			max.	max.	N	N	N	N	N	N	N/µm	N/µm	N/µm
85	4	10,4	2,2	15	92	114	0,6	0,6	117	428	906	346	1 341	2 985	67,4	114	161
	4	10,4	2,2	25	92	114	0,6	0,6	143	627	1 403	409	1 837	4 197	154	262	356
	4	10,4	2,2	25	92	114	0,6	0,6	82	247	493	236	716	1 452	140	206	265
	3,1	10,4	1,4	17	92	114	0,6	0,6	142	376	788	414	1 118	2 414	73	105	142
	3,1	10,4	1,4	25	92	114	0,6	0,6	205	538	1 118	588	1 556	3 278	149	209	273
	3,1	10,4	1,4	17	92	114	0,6	0,6	128	337	706	371	998	2 146	73	104	139
	3,1	10,4	1,4	25	92	114	0,6	0,6	185	483	1 003	528	1 394	2 932	148	208	270
	4,7	12,2	2,2	15	93	122	1	0,6	189	653	1 356	562	2 058	4 501	76,9	128	179
	4,7	12,2	2,2	25	93	122	1	0,6	256	997	2 159	736	2 927	6 484	181	296	398
	4,7	12,2	2,2	25	93	122	1	0,6	120	359	718	343	1 042	2 115	150	221	286
	3,3	12,35	2,2	17	93	122	1	0,6	184	488	1 026	540	1 470	3 203	88	128	175
	3,3	12,35	2,2	25	93	122	1	0,6	265	695	1 448	761	2 022	4 283	178	251	330
	3,3	12,35	2,2	17	93	122	1	0,6	165	437	918	483	1 309	2 841	88	127	171
	3,3	12,35	2,2	25	93	122	1	0,6	238	624	1 298	683	1 811	3 826	177	249	327
90	4	10,4	2,2	15	97	119	0,6	0,6	118	434	919	349	1 357	3 023	69,4	118	165
	4	10,4	2,2	25	97	119	0,6	0,6	147	648	1 450	421	1 897	4 337	160	272	369
	4	10,4	2,2	25	97	119	0,6	0,6	90	269	538	257	781	1 584	144	212	273
	3,1	10,4	2,2	17	97	119	0,6	0,6	155	410	859	452	1 220	2 633	80	114	154
	3,1	10,4	2,2	25	97	119	0,6	0,6	224	586	1 219	641	1 696	3 574	162	227	296
	3,1	10,4	2,2	17	97	119	0,6	0,6	139	367	769	405	1 089	2 341	79	113	151
	3,1	10,4	2,2	25	97	119	0,6	0,6	201	526	1 093	575	1 520	3 196	161	225	294
	5,5	14,5	2,2	15	100	131	1,5	0,6	230	781	1 613	685	2 464	5 361	82,3	136	191
	5,5	14,5	2,2	25	100	131	1,5	0,6	319	1 201	2 577	916	3 528	7 745	195	316	423
	5,5	14,5	2,2	25	100	131	1,5	0,6	141	423	845	404	1 228	2 490	163	241	310
	4	14,5	2,2	17	100	131	1,5	0,6	205	542	1 140	599	1 632	3 557	91	133	181
	4	14,5	2,2	25	100	131	1,5	0,6	295	772	1 608	846	2 247	4 759	184	260	341
	4	14,5	2,2	17	100	131	1,5	0,6	184	485	1 020	536	1 454	3 155	91	131	177
	4	14,5	2,2	25	100	131	1,5	0,6	265	693	1 443	759	2 012	4 250	183	258	338

Super precision angular contact ball bearings

Ceramic balls
Steel rings
Design DLR

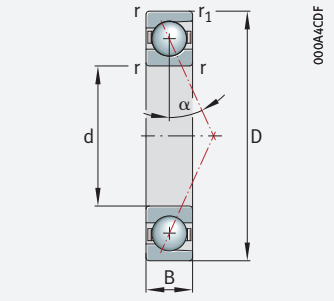

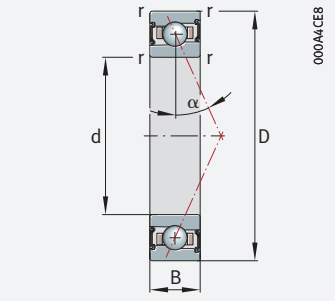

d = 95 – 100 mm

Main dimensions			Basic load ratings		Fatigue limit load	Limiting speeds[1]		Dimensions		Mass	Designation[2]
d	D	B	dyn. C_r	stat. C_{0r}	C_{ur}	n_G grease	n_G oil[4]	r	r_1	m	
			kN	kN	N	min^{-1}	min^{-1}	min.	min.	≈ kg	
95	130	18	49	35	2 650	14 000	22 000	1,1	1,1	0,462	**HCB71919-CDLR-T-P4S**
	130	18	46	33	2 500	13 000	19 000	1,1	1,1	0,463	**HCB71919-EDLR-T-P4S**
	130	18	22,5	17,9	1 360	16 000	24 000	1,1	1,1	0,57	**HC71919-EDLR-T-P4S**
	130	18	33,5	21	1 600	18 300	26 700	1,1	0,6	0,47	**HCM71919-CDLR-T-P4S-XL**
	130	18	32	20,1	1 520	17 400	24 900	1,1	0,6	0,47	**HCM71919-EDLR-T-P4S-XL**
	130	18	80	29,5	1 420	18 700	28 100	1,1	0,6	0,47	**VCM71919-CDLR-T-P4S-XL**
	130	18	76	28	1 350	17 800	26 700	1,1	0,6	0,47	**VCM71919-EDLR-T-P4S-XL**
	145	24	81	52	3 800	13 000	20 000	1,5	1,5	0,98	**HCB7019-CDLR-T-P4S**
	145	24	77	49,5	3 650	12 000	18 000	1,5	1,5	0,98	**HCB7019-EDLR-T-P4S**
	145	24	34,5	25	1 840	15 000	24 000	1,5	1,5	1,22	**HC7019-EDLR-T-P4S**
	145	24	42	29,5	2 180	17 100	25 000	1,5	1	1,2	**HCM7019-CDLR-T-P4S-XL**
	145	24	40	28,5	2 080	16 300	23 400	1,5	1	1,2	**HCM7019-EDLR-T-P4S-XL**
	145	24	101	41,5	1 930	17 500	25 400	1,5	1	1,2	**VCM7019-CDLR-T-P4S-XL**
	145	24	97	39,5	1 840	16 700	25 000	1,5	1	1,2	**VCM7019-EDLR-T-P4S-XL**
100	140	20	60	43	3 150	13 000	20 000	1,1	1,1	0,64	**HCB71920-CDLR-T-P4S**
	140	20	57	40,5	3 000	12 000	18 000	1,1	1,1	0,64	**HCB71920-EDLR-T-P4S**
	140	20	27	21,2	1 560	15 000	24 000	1,1	1,1	0,8	**HC71920-EDLR-T-P4S**
	140	20	38,5	24,6	1 810	17 100	25 000	1,1	0,6	0,67	**HCM71920-CDLR-T-P4S-XL**
	140	20	36,5	23,5	1 730	16 300	23 400	1,1	0,6	0,67	**HCM71920-EDLR-T-P4S-XL**
	140	20	92	34,5	1 600	17 500	26 600	1,1	0,6	0,67	**VCM71920-CDLR-T-P4S-XL**
	140	20	88	33	1 530	16 700	25 000	1,1	0,6	0,67	**VCM71920-EDLR-T-P4S-XL**
	150	24	83	55	3 950	13 000	19 000	1,5	1,5	1,01	**HCB7020-CDLR-T-P4S**
	150	24	79	52	3 750	11 000	17 000	1,5	1,5	1,01	**HCB7020-EDLR-T-P4S**
	150	24	34,5	26	1 860	15 000	22 000	1,5	1,5	1,27	**HC7020-EDLR-T-P4S**
	150	24	43	31	2 220	16 400	23 500	1,5	1	1,2	**HCM7020-CDLR-T-P4S-XL**
	150	24	41	29,5	2 120	15 600	22 400	1,5	1	1,2	**HCM7020-EDLR-T-P4S-XL**
	150	24	103	43	1 970	16 800	23 500	1,5	1	1,2	**VCM7020-CDLR-T-P4S-XL**
	150	24	98	41	1 880	16 000	23 500	1,5	1	1,2	**VCM7020-EDLR-T-P4S-XL**

medias *https://www.schaeffler.de/std/1F9A*

1) The limiting speeds are based on elastically preloaded single bearings.
2) Explanation of designations SP 1.
3) L = light preload; M = moderate preload; H = high preload.
4) Minimal quantity oil lubrication.

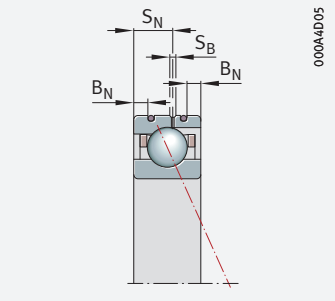

Design DLR

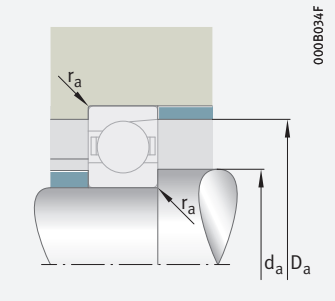

Mounting dimensions

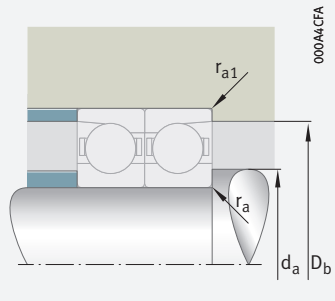

Mounting dimensions

Dimensions				Contact angle	Mounting dimensions				Preload force[3] F_V			Lift-off force[3] K_{aE}			Axial rigidity[3] c_a		
d	B_N	S_N	S_B	α	d_a h12	D_a H12	r_a	r_{a1}	L	M	H	L	M	H	L	M	H
				°			max.	max.	N	N	N	N	N	N	N/µm	N/µm	N/µm
95	4	10,4	2,2	15	102	124	0,6	0,6	119	440	932	352	1 373	3 061	71,3	121	170
	4	10,4	2,2	25	102	124	0,6	0,6	148	656	1 470	423	1 918	4 393	164	280	380
	4	10,4	2,2	25	102	124	0,6	0,6	92	276	552	263	801	1 623	150	221	285
	3,1	10,4	2,2	17	102	124	0,6	0,6	162	428	898	472	1 275	2 752	83	119	160
	3,1	10,4	2,2	25	102	124	0,6	0,6	234	612	1 272	670	1 771	3 732	168	236	308
	3,1	10,4	2,2	17	102	124	0,6	0,6	146	384	804	423	1 137	2 446	82	118	158
	3,1	10,4	2,2	25	102	124	0,6	0,6	210	550	1 142	601	1 587	3 338	167	234	305
	5,5	14,5	2,2	15	105	136	1,5	0,6	233	794	1 643	693	2 499	5 442	85,3	141	197
	5,5	14,5	2,2	25	105	136	1,5	0,6	322	1 220	2 622	924	3 581	7 871	203	328	439
	5,5	14,5	2,2	25	105	136	1,5	0,6	141	423	845	404	1 227	2 488	167	246	317
	4	14,5	2,2	17	105	136	1,5	0,6	231	610	1 284	675	1 839	4 007	102	149	203
	4	14,5	2,2	25	105	136	1,5	0,6	332	869	1 811	952	2 530	5 359	207	292	383
	4	14,5	2,2	17	105	136	1,5	0,6	207	547	1 149	604	1 638	3 555	102	147	199
	4	14,5	2,2	25	105	136	1,5	0,6	298	780	1 624	854	2 265	4 786	206	289	379
100	4	12	2,2	15	107	133	0,6	0,6	160	572	1 201	473	1 789	3 950	80,4	135	189
	4	12	2,2	25	107	133	0,6	0,6	204	850	1 876	584	2 489	5 611	187	311	421
	4	12	2,2	25	107	133	0,6	0,6	109	328	656	313	951	1 927	162	239	307
	3,4	12	2,2	17	107	133	0,6	0,6	190	500	1 049	551	1 489	3 217	89	129	173
	3,4	12	2,2	25	107	133	0,6	0,6	273	715	1 487	782	2 070	4 362	182	255	333
	3,4	12	2,2	17	107	133	0,6	0,6	170	448	939	494	1 329	2 860	89	127	170
	3,4	12	2,2	25	107	133	0,6	0,6	245	642	1 334	702	1 855	3 901	181	253	330
	5,5	14,5	2,2	15	110	141	1,5	0,6	241	823	1 703	717	2 587	5 636	89,1	148	206
	5,5	14,5	2,2	25	110	141	1,5	0,6	333	1 266	2 723	957	3 715	8 170	212	343	459
	5,5	14,5	2,2	25	110	141	1,5	0,6	144	431	863	412	1 252	2 539	171	253	326
	4	14,5	2,2	17	110	141	1,5	0,6	240	635	1 336	703	1 915	4 174	106	154	210
	4	14,5	2,2	25	110	141	1,5	0,6	345	905	1 885	991	2 633	5 578	215	302	397
	4	14,5	2,2	17	110	141	1,5	0,6	215	569	1 196	629	1 706	3 702	105	152	206
	4	14,5	2,2	25	110	141	1,5	0,6	310	812	1 691	889	2 358	4 982	213	300	393

Super precision angular contact ball bearings

Ceramic balls
Steel rings
Design DLR

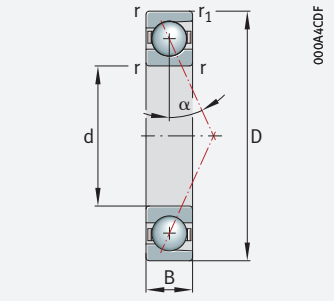

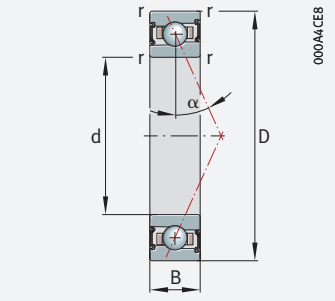

d = 105 – 110 mm

Main dimensions			Basic load ratings		Fatigue limit load	Limiting speeds[1]		Dimensions		Mass	Designation[2]
d	D	B	dyn. C_r	stat. C_{0r}	C_{ur}	n_G grease	n_G oil[4]	r	r_1	m	
			kN	kN	N	min^{-1}	min^{-1}	min.	min.	≈ kg	
105	145	20	60	43	3 100	13 000	19 000	1,1	1,1	0,68	**HCB71921-CDLR-T-P4S**
	145	20	57	41	2 950	11 000	17 000	1,1	1,1	0,68	**HCB71921-EDLR-T-P4S**
	145	20	27,5	22,4	1 610	15 000	22 000	1,1	1,1	0,82	**HC71921-EDLR-T-P4S**
	145	20	39	25,5	1 850	16 400	24 000	1,1	0,6	0,69	**HCM71921-CDLR-T-P4S-XL**
	145	20	37	24,4	1 760	15 600	22 400	1,1	0,6	0,69	**HCM71921-EDLR-T-P4S-XL**
	145	20	94	36	1 640	16 800	24 700	1,1	0,6	0,69	**VCM71921-CDLR-T-P4S-XL**
	145	20	89	34	1 560	16 000	24 000	1,1	0,6	0,69	**VCM71921-EDLR-T-P4S-XL**
	160	26	85	58	4 100	12 000	18 000	2	2	1,36	**HCB7021-CDLR-T-P4S**
	160	26	81	55	3 850	11 000	16 000	2	2	1,36	**HCB7021-EDLR-T-P4S**
	160	26	45	33	2 300	14 000	22 000	2	2	1,56	**HC7021-EDLR-T-P4S**
	160	26	53	38	2 650	15 500	22 700	2	1	1,5	**HCM7021-CDLR-T-P4S-XL**
	160	26	51	36	2 550	14 800	21 200	2	1	1,5	**HCM7021-EDLR-T-P4S-XL**
	160	26	128	53	2 350	15 900	23 400	2	1	1,5	**VCM7021-CDLR-T-P4S-XL**
	160	26	122	51	2 240	15 100	22 700	2	1	1,5	**VCM7021-EDLR-T-P4S-XL**
110	150	20	61	45	3 200	12 000	19 000	1,1	1,1	0,69	**HCB71922-CDLR-T-P4S**
	150	20	58	42,5	3 000	11 000	17 000	1,1	1,1	0,69	**HCB71922-EDLR-T-P4S**
	150	20	32	26	1 820	14 000	22 000	1,1	1,1	0,82	**HC71922-EDLR-T-P4S**
	150	20	39,5	26,5	1 880	15 800	23 000	1,1	0,6	0,72	**HCM71922-CDLR-T-P4S-XL**
	150	20	38	25,5	1 800	15 000	21 600	1,1	0,6	0,72	**HCM71922-EDLR-T-P4S-XL**
	150	20	95	37,5	1 670	16 200	23 000	1,1	0,6	0,72	**VCM71922-CDLR-T-P4S-XL**
	150	20	91	35,5	1 590	15 400	23 000	1,1	0,6	0,72	**VCM71922-EDLR-T-P4S-XL**
	170	28	112	74	5 000	12 000	18 000	2	2	1,59	**HCB7022-CDLR-T-P4S**
	170	28	106	70	4 750	11 000	16 000	2	2	1,59	**HCB7022-EDLR-T-P4S**
	170	28	45,5	34	2 330	13 000	20 000	2	2	2,02	**HC7022-EDLR-T-P4S**
	170	28	70	34	2 290	14 000	22 000	2	2	2,02	**XC7022-EDLR-T-P4S**
	170	28	54	39,5	2 700	14 700	21 500	2	1	1,9	**HCM7022-CDLR-T-P4S-XL**
	170	28	51	37,5	2 550	14 000	20 000	2	1	1,9	**HCM7022-EDLR-T-P4S-XL**
	170	28	129	55	2 290	15 000	21 500	2	1	2,09	**VCM7022-CDLR-T-P4S-XL**
	170	28	123	52	2 180	14 300	21 500	2	1	2,09	**VCM7022-EDLR-T-P4S-XL**

medias *https://www.schaeffler.de/std/1F9A*

1) The limiting speeds are based on elastically preloaded single bearings.
2) Explanation of designations SP 1.
3) L = light preload; M = moderate preload; H = high preload.
4) Minimal quantity oil lubrication.

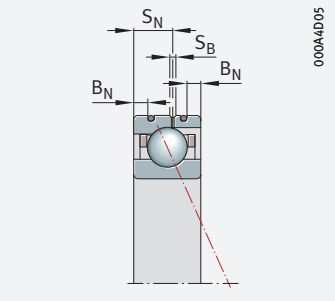

Design DLR

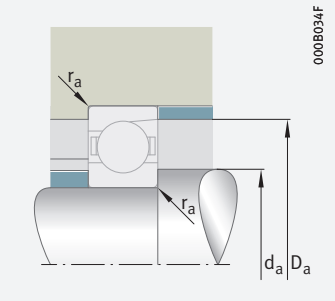

Mounting dimensions

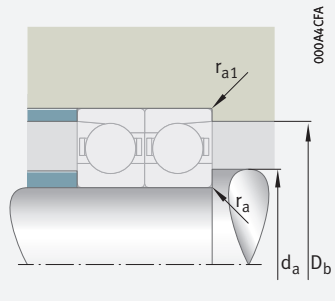

Mounting dimensions

Dimensions				Contact angle	Mounting dimensions				Preload force[3] F_V			Lift-off force[3] K_{aE}			Axial rigidity[3] c_a		
d	B_N	S_N	S_B	α	d_a h12	D_a H12	r_a	r_{a1}	L	M	H	L	M	H	L	M	H
				°			max.	max.	N	N	N	N	N	N	N/µm	N/µm	N/µm
105	4	12	2,2	15	112	138	0,6	0,6	157	564	1 185	466	1 763	3 895	80	134	188
	4	12	2,2	25	112	138	0,6	0,6	204	850	1 876	584	2 489	5 611	187	311	421
	4	12	2,2	25	112	138	0,6	0,6	113	338	676	323	980	1 987	170	250	321
	3,4	12	2,2	17	112	138	0,6	0,6	198	521	1 093	575	1 553	3 354	93	134	180
	3,4	12	2,2	25	112	138	0,6	0,6	285	745	1 549	815	2 157	4 546	189	265	346
	3,4	12	2,2	17	112	138	0,6	0,6	177	467	979	515	1 385	2 981	92	132	177
	3,4	12	2,2	25	112	138	0,6	0,6	256	669	1 390	732	1 933	4 065	188	263	343
	5,5	15,5	2,2	15	116	150	2	1	244	836	1 732	725	2 623	5 718	92,1	153	213
	5,5	15,5	2,2	25	116	150	2	1	336	1 285	2 768	966	3 768	8 297	219	355	476
	5,5	15,5	2,2	25	116	150	2	1	184	552	1 104	527	1 602	3 250	188	277	357
	4,2	15,5	2,2	17	116	150	2	1	294	778	1 638	861	2 347	5 116	113	165	225
	4,2	15,5	2,2	25	116	150	2	1	422	1 107	2 306	1 213	3 222	6 827	229	323	424
	4,2	15,5	2,2	17	116	150	2	1	264	697	1 465	770	2 090	4 537	112	163	220
	4,2	15,5	2,2	25	116	150	2	1	379	994	2 069	1 088	2 885	6 097	228	320	420
110	4	12	2,2	15	117	143	0,6	0,6	158	570	1 199	468	1 777	3 931	82,1	138	193
	4	12	2,2	25	117	143	0,6	0,6	208	871	1 923	596	2 547	5 747	193	322	435
	4	12	2,2	25	117	143	0,6	0,6	131	393	787	375	1 141	2 312	178	262	337
	3,4	12	2,2	17	117	143	0,6	0,6	206	542	1 138	598	1 616	3 491	96	139	187
	3,4	12	2,2	25	117	143	0,6	0,6	296	775	1 612	848	2 244	4 730	196	275	359
	3,4	12	2,2	17	117	143	0,6	0,6	185	486	1 019	536	1 442	3 103	96	137	184
	3,4	12	2,2	25	117	143	0,6	0,6	266	696	1 446	761	2 010	4 230	195	273	356
	6	16,2	2,2	15	121	159	2	1	337	1 126	2 314	1 004	3 540	7 655	103	169	234
	6	16,2	2,2	25	121	159	2	1	490	1 779	3 778	1 409	5 224	11 341	248	395	527
	6	16,2	2,2	25	121	159	2	1	187	561	1 121	535	1 627	3 299	193	284	366
	6	16,2	2,2	25	121	159	2	1	187	561	1 121	535	1 627	3 299	193	284	366
	5,2	16,2	2,2	17	121	159	2	1	307	813	1 711	900	2 452	5 346	118	171	234
	5,2	16,2	2,2	25	121	159	2	1	441	1 156	2 408	1 266	3 365	7 129	238	335	441
	5,2	16,2	2,2	17	121	159	2	1	276	728	1 530	805	2 184	4 742	117	169	229
	5,2	16,2	2,2	25	121	159	2	1	396	1 038	2 160	1 136	3 012	6 367	237	333	436

Super precision cylindrical roller bearings

Single row
Steel or ceramic rollers

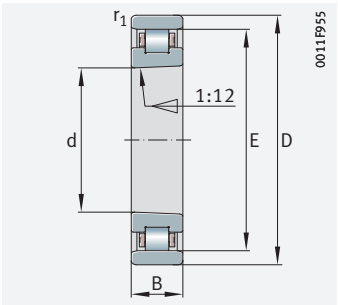

N10 steel rollers

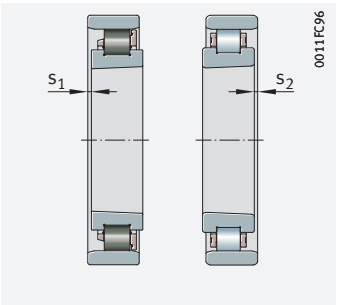

Axial displacement

d = 30 – 55 mm

Main dimensions			Basic load ratings		Fatigue limit load	Limiting speeds		Mass	Designation[1]
d	D	B	dyn. C_r	stat. C_{0r}	C_{ur}	n_G grease	n_G oil[2]	m	X-life ➤ *1144*
			N	N	N	min^{-1}	min^{-1}	≈ kg	
30	55	13	17 500	15 600	2 270	21 700	25 500	0,12	**N1006-D-K-TVP-SP-XL**
	55	13	20 200	20 400	2 650	33 500	39 500	0,12	**N1006-K-PVPA1-SP**
	55	13	23 900	19 300	1 920	36 500	43 000	0,11	**HCN1006-K-PVPA1-SP**
35	62	14	23 600	20 900	3 350	18 700	22 000	0,16	**N1007-D-K-TVP-SP-XL**
	62	14	19 900	20 900	2 700	30 000	35 000	0,16	**N1007-C-K-PVPA1-SP**
	62	14	23 500	19 700	1 970	32 500	38 500	0,14	**HCN1007-C-K-PVPA1-SP**
40	68	15	27 000	26 000	4 200	17 100	20 100	0,2	**N1008-D-K-TVP-SP-XL**
	68	15	27 500	29 000	3 650	26 500	31 000	0,19	**N1008-K-PVPA1-SP**
	68	15	32 000	27 500	2 750	29 000	34 000	0,16	**HCN1008-K-PVPA1-SP**
45	75	16	34 500	32 500	5 100	15 200	17 800	0,24	**N1009-D-K-TVP-SP-XL**
	75	16	29 000	32 500	4 100	24 400	28 500	0,24	**N1009-C-K-PVPA1-SP**
	75	16	34 500	31 000	3 100	26 500	31 000	0,22	**HCN1009-C-K-PVPA1-SP**
50	80	16	36 500	36 500	5 700	14 200	16 800	0,27	**N1010-D-K-TVP-SP-XL**
	80	16	31 000	36 500	4 600	22 800	27 000	0,27	**N1010-C-K-PVPA1-SP**
	80	16	36 500	34 500	3 450	24 900	29 500	0,23	**HCN1010-C-K-PVPA1-SP**
55	90	18	48 000	48 500	7 900	12 600	14 800	0,4	**N1011-D-K-TVP-SP-XL**
	90	18	40 500	48 000	6 400	20 200	23 800	0,4	**N1011-K-PVPA1-SP**
	90	18	48 000	45 500	4 750	22 100	26 000	0,34	**HCN1011-K-PVPA1-SP**

medias *https://www.schaeffler.de/std/1F9A*

[1] The bearings are also available by agreement in the following designs:
- With cylindrical bore (without suffix K), ordering example: N1006-D-TVP-SP-XL

Series HCN10 is available by agreement in the following design from d = 30 mm to d = 120 mm:
- With half the number of rollers for higher limiting speeds (suffix H193), ordering example: HCN1024-K-PVPA1-SP-H193

[2] Minimal quantity oil lubrication.

[3] Axial displacement of outer ring from central position.

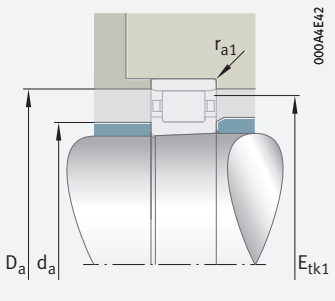

Mounting dimensions

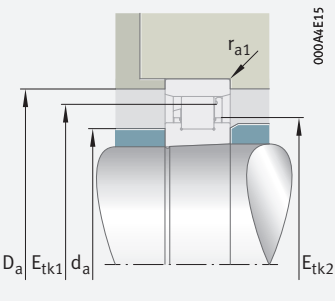

Mounting dimensions for bearings with PVPA1 cage

Dimensions					Mounting dimensions				
d	r_1 min.	E	s_1 [3]	s_2 [3]	d_a h12	D_a H12	E_{tk1} nom.	E_{tk2} nom.	r_{a1} max.
30	0,6	48,5	2,8	2,8	38,5	49,5	47,5	–	0,6
	0,6	48,5	0,85	2,2	36,5	49,4	47	39,7	0,6
	0,6	48,5	0,85	2,2	36,5	49,4	47	39,7	0,6
35	0,6	55	2,8	2,8	43	56	53,9	–	0,6
	0,6	55	0,9	2,4	43	56,1	53,4	45,8	0,6
	0,6	55	0,9	2,4	43	56,1	53,4	45,8	0,6
40	0,6	61	3,1	3,1	49	62,1	59,8	–	0,6
	0,6	61	0,95	2,5	47	62,1	59,3	50,8	0,6
	0,6	61	0,95	2,5	47	62,1	59,3	50,8	0,6
45	0,6	67,5	3,1	3,1	53,5	68,6	66,2	–	0,6
	0,6	67,5	1,2	2,5	53,5	68,7	65,6	56,9	0,6
	0,6	67,5	1,2	2,5	53,5	68,7	65,6	56,9	0,6
50	0,6	72,5	3,1	3,1	58,5	73,6	71,2	–	0,6
	0,6	72,5	1,15	2,7	58,5	73,7	70,6	61,9	0,6
	0,6	72,5	1,15	2,7	58,5	73,7	70,6	61,9	0,6
55	1	81	3,4	3,4	65	82,2	79,3	–	1
	1	80,5	1,4	3	64,5	81,8	78,5	68,8	1
	1	80,5	1,4	3	64,5	81,8	78,5	68,8	1

Super precision cylindrical roller bearings

Single row
Steel or ceramic rollers

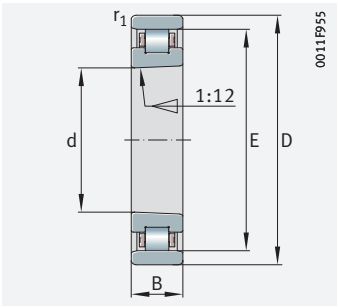

N10 steel rollers

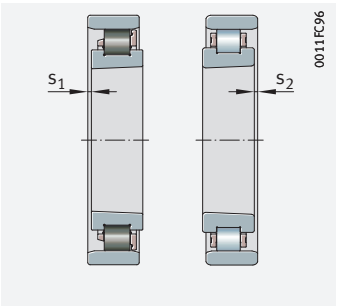

Axial displacement

d = 60 – 85 mm

Main dimensions			Basic load ratings		Fatigue limit load	Limiting speeds		Mass	Designation[1]
d	D	B	dyn. C_r	stat. C_{0r}	C_{ur}	n_G grease	n_G oil[2]	m	X-life ➤ *1144*
			N	N	N	min^{-1}	min^{-1}	≈ kg	
60	95	18	51 000	53 000	8 700	11 900	14 000	0,43	**N1012-D-K-TVP-SP-XL**
	95	18	43 000	53 000	7 100	19 200	22 600	0,42	**N1012-K-PVPA1-SP**
	95	18	51 000	50 000	5 300	21 000	24 700	0,37	**HCN1012-K-PVPA1-SP**
65	100	18	53 000	58 000	9 500	11 400	13 400	0,45	**N1013-D-K-TVP-SP-XL**
	100	18	45 000	58 000	7 700	18 200	21 400	0,45	**N1013-C-K-PVPA1-SP**
	100	18	53 000	55 000	5 700	19 900	23 400	0,4	**HCN1013-C-K-PVPA1-SP**
70	110	20	66 000	72 000	10 600	10 200	12 000	0,64	**N1014-D-K-TVP-SP-XL**
	110	20	63 000	77 000	9 400	16 000	18 800	0,61	**N1014-K-PVPA1-SP**
	110	20	72 000	71 000	7 700	17 500	20 600	0,52	**HCN1014-K-PVPA1-SP**
75	115	20	65 000	73 000	10 700	9 800	11 500	0,67	**N1015-D-K-TVP-SP-XL**
	115	20	66 000	85 000	10 300	15 300	18 000	0,65	**N1015-K-PVPA1-SP**
	115	20	76 000	78 000	8 500	16 800	19 700	0,56	**HCN1015-K-PVPA1-SP**
80	125	22	81 000	91 000	13 900	9 000	10 600	0,9	**N1016-D-K-TVP-SP-XL**
	125	22	77 000	99 000	12 900	14 000	16 500	0,88	**N1016-K-PVPA1-SP**
	125	22	91 000	93 000	10 500	15 300	18 100	0,76	**HCN1016-K-PVPA1-SP**
85	130	22	80 000	91 000	13 800	8 700	10 200	0,95	**N1017-D-K-TVP-SP-XL**
	130	22	76 000	99 000	12 800	13 500	15 900	1	**N1017-K-PVPA1-SP**
	130	22	90 000	94 000	10 500	14 800	17 400	0,89	**HCN1017-K-PVPA1-SP**

medias *https://www.schaeffler.de/std/1F9A*

[1] The bearings are also available by agreement in the following designs:
- With cylindrical bore (without suffix K), ordering example: N1006-D-TVP-SP-XL

Series HCN10 is available by agreement in the following design from d = 30 mm to d = 120 mm:
- With half the number of rollers for higher limiting speeds (suffix H193), ordering example: HCN1024-K-PVPA1-SP-H193

[2] Minimal quantity oil lubrication.

[3] Axial displacement of outer ring from central position.

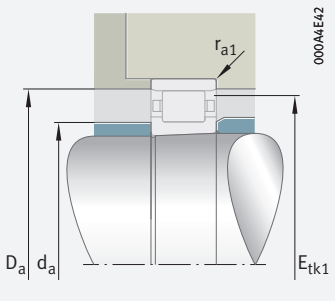

Mounting dimensions

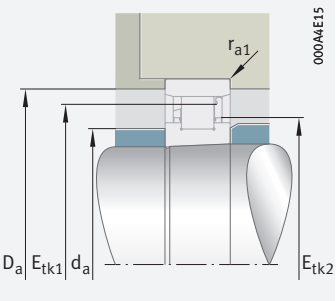

Mounting dimensions for bearings with PVPA1 cage

Dimensions					Mounting dimensions				
d	r_1 min.	E	s_1 [3]	s_2 [3]	d_a h12	D_a H12	E_{tk1} nom.	E_{tk2} nom.	r_{a1} max.
60	1	86,1	3,4	3,4	70,1	87,3	84,4	–	1
	1	85,5	1,25	3	69,5	86,8	83,5	73,8	1
	1	85,5	1,25	3	69,5	86,8	83,5	73,8	1
65	1	91	3,4	3,4	75	92,2	89,3	–	1
	1	91	1,4	2,5	75	92,3	88,5	78,7	1
	1	91	1,4	2,5	75	92,3	88,5	78,7	1
70	1	100	3,8	3,8	82	101,3	98,2	–	1
	1	100	1,25	3,3	80	101,3	97,5	85,4	1
	1	100	1,25	3,3	80	101,3	97,5	85,4	1
75	1	105	3,8	3,8	87	106,3	103,2	–	1
	1	105	1	3	85	106,3	102,5	90,4	1
	1	105	1	3	85	106,3	102,5	90,4	1
80	1	113	4,1	4,1	93	114,4	111,4	–	1
	1	113,5	1,1	3,5	91,5	115	110,8	97,4	1
	1	113,5	1,1	3,5	91,5	115	110,8	97,4	1
85	1	118	4,1	4,1	98	119,4	116,3	–	1
	1	118,5	1,5	2,7	96,5	120	115,8	102,4	1
	1	118,5	1,5	2,7	96,5	120	115,8	102,4	1

Super precision cylindrical roller bearings

Single row
Steel or ceramic rollers

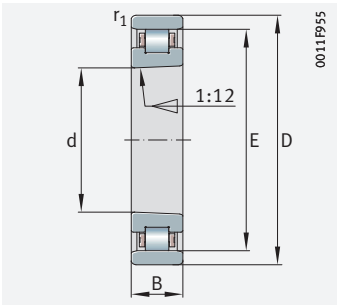

N10 steel rollers

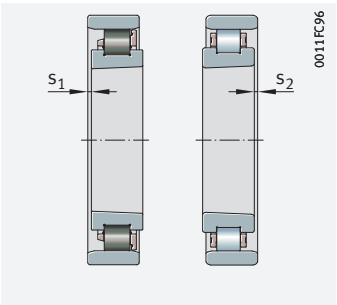

Axial displacement

d = 90 – 120 mm

Main dimensions			Basic load ratings		Fatigue limit load	Limiting speeds		Mass	Designation[1]
d	D	B	dyn. C_r	stat. C_{0r}	C_{ur}	n_G grease	n_G oil[2]	m	X-life ➤ *1144*
			N	N	N	min^{-1}	min^{-1}	≈ kg	
90	140	24	95 000	108 000	16 800	8 000	9 400	1,23	**N1018-D-K-TVP-SP-XL**
	140	24	91 000	119 000	15 500	12 500	14 700	1,2	**N1018-K-PVPA1-SP**
	140	24	107 000	113 000	12 500	13 700	16 100	1,06	**HCN1018-K-PVPA1-SP**
95	145	24	99 000	117 000	18 000	7 700	9 100	1,29	**N1019-D-K-TVP-SP-XL**
	145	24	96 000	130 000	16 700	12 100	14 200	1,26	**N1019-K-PVPA1-SP**
	145	24	113 000	123 000	13 500	13 200	15 600	1,2	**HCN1019-K-PVPA1-SP**
100	150	24	99 000	118 000	17 800	7 500	8 800	1,34	**N1020-D-K-TVP-SP-XL**
	150	24	95 000	130 000	16 500	11 700	13 800	1,29	**N1020-K-PVPA1-SP**
	150	24	112 000	123 000	13 400	12 800	15 100	1,2	**HCN1020-K-PVPA1-SP**
105	160	26	132 000	154 000	24 500	6 800	8 000	1,67	**N1021-D-K-TVP-SP-XL**
	160	26	112 000	154 000	19 800	10 900	12 900	1,66	**N1021-K-PVPA1-SP**
	160	26	131 000	145 000	15 000	11 900	14 100	1,6	**HCN1021-K-PVPA1-SP**
110	170	28	153 000	180 000	28 500	6 400	7 500	2,06	**N1022-D-K-TVP-SP-XL**
	170	28	141 000	191 000	24 800	10 000	11 800	2,02	**N1022-K-PVPA1-SP**
	170	28	166 000	180 000	18 800	11 000	12 900	1,9	**HCN1022-K-PVPA1-SP**
120	180	28	160 000	196 000	30 500	6 000	7 100	2,22	**N1024-D-K-TVP-SP-XL**
	180	28	148 000	208 000	26 500	9 500	11 200	2,18	**N1024-K-PVPA1-SP**
	180	28	174 000	196 000	20 100	10 400	12 200	2,05	**HCN1024-K-PVPA1-SP**

medias *https://www.schaeffler.de/std/1F9A*

[1] The bearings are also available by agreement in the following designs:
- With cylindrical bore (without suffix K), ordering example: N1006-D-TVP-SP-XL

Series HCN10 is available by agreement in the following design from d = 30 mm to d = 120 mm:
- With half the number of rollers for higher limiting speeds (suffix H193), ordering example: HCN1024-K-PVPA1-SP-H193

[2] Minimal quantity oil lubrication.

[3] Axial displacement of outer ring from central position.

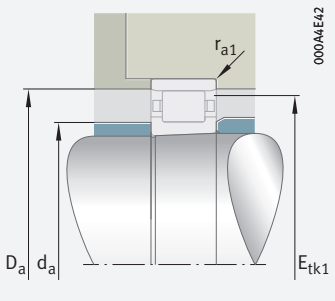

Mounting dimensions

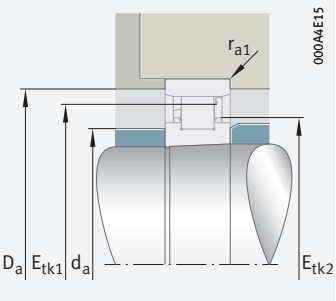

Mounting dimensions for bearings with PVPA1 cage

Dimensions					Mounting dimensions				
d	r_1 min.	E	s_1 [3]	s_2 [3]	d_a h12	D_a H12	E_{tk1} nom.	E_{tk2} nom.	r_{a1} max.
90	1,1	127	4,4	4,4	105	128,5	124,9	–	1
	1,1	127	1,2	3,7	103	128,6	124	109,4	1
	1,1	127	1,2	3,7	103	128,6	124	109,4	1
95	1,1	132	4,4	4,4	110	133,5	129,8	–	1
	1,1	132	1,2	3,7	108	133,6	129	114,4	1
	1,1	132	1,2	3,7	108	133,6	129	114,4	1
100	1,1	137	4,4	4,4	115	138,5	134,8	–	1
	1,1	137	1,1	3,5	113	138,6	134	119,4	1
	1,1	137	1,1	3,5	113	138,6	134	119,4	1
105	1,1	146	4,5	4,5	120	147,5	143,5	–	1
	1,1	145,5	0,6	3,2	119,5	147,2	142,3	126,5	1
	1,1	145,5	0,6	3,2	119,5	147,2	142,3	126,5	1
110	1,1	155	4,8	4,8	127	156,6	152,4	–	1
	1,1	155	1	4	125	156,7	151,3	133,1	1
	1,1	155	1	4	125	156,7	151,3	133,1	1
120	1,1	165	4,8	4,8	137	166,6	162,4	–	1
	1,1	165	1	4	135	166,7	161,3	143,1	1
	1,1	165	1	4	135	166,7	161,3	143,1	1

Super precision cylindrical roller bearings

Single row
Steel rollers

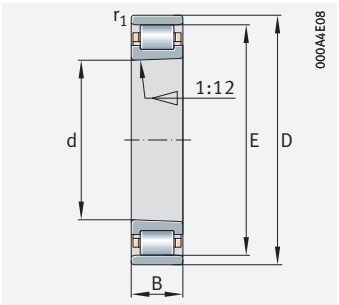

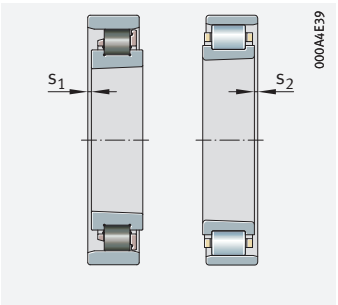

Axial displacement

d = 130 – 200 mm

Main dimensions			Basic load ratings		Fatigue limit load	Limiting speeds		Mass	Designation[1)2)]
d	D	B	dyn. C_r	stat. C_{0r}	C_{ur}	n_G grease	n_G oil[3)]	m	X-life ➤ *1144*
			N	N	N	min^{-1}	min^{-1}	≈ kg	
130	200	33	179 000	250 000	32 000	4 800	5 600	3,72	**N1026-K-M1-SP**
140	210	33	183 000	265 000	33 000	4 550	5 400	3,85	**N1028-K-M1-SP**
150	225	35	210 000	310 000	38 500	4 250	5 000	4,81	**N1030-K-M1-SP**
160	240	38	245 000	355 000	44 000	3 900	4 600	5,76	**N1032-K-M1-SP**
170	260	42	295 000	435 000	52 000	3 600	4 250	7,77	**N1034-K-M1-SP**
180	280	46	360 000	520 000	65 000	3 300	3 850	10,2	**N1036-K-M1-SP**
190	290	46	370 000	550 000	67 000	3 200	3 750	10,6	**N1038-K-M1-SP**
200	310	51	395 000	600 000	72 000	3 000	3 500	13,7	**N1040-K-M1-SP**

medias *https://www.schaeffler.de/std/1F9A*

1) The bearings are also available by agreement in the following designs:
   - With cylindrical bore (without suffix K), ordering example: N1026-M1-SP

2) Bearings with a larger diameter are available by agreement.

3) Minimal quantity oil lubrication.

4) Axial displacement of outer ring from central position.

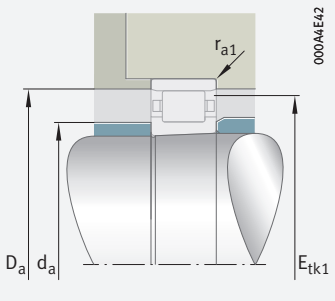

Mounting dimensions

Dimensions					Mounting dimensions			
d	r_1 min.	E	s_1 [4)]	s_2 [4)]	d_a h12	D_a H12	E_{tk1} nom.	r_{a1} max.
130	1,1	182	4,2	4,2	148	184,1	177,8	1
140	1,1	192	4,2	4,2	158	194,1	187,8	1
150	1,5	205,5	4,4	4,4	169,5	207,8	201	1,5
160	1,5	220	4,6	4,6	180	222,4	215	1,5
170	2,1	237	5	5	193	239,7	231,5	2,1
180	2,1	255	5,6	5,6	205	257,8	248,8	2,1
190	2,1	265	5,6	5,6	215	267,8	258,8	2,1
200	2,1	281	6,4	6,4	229	284,3	274,5	2,1

Super precision cylindrical roller bearings

Double row
Non-locating bearings

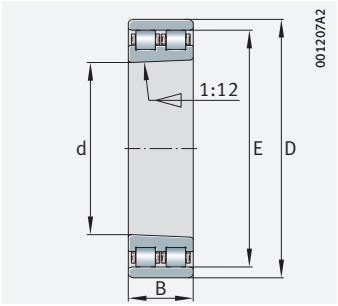

NN30..-D-K-TVP

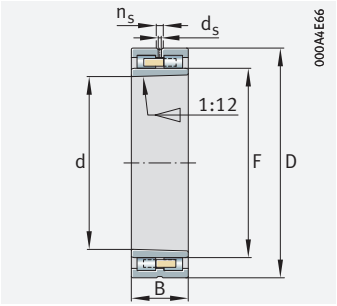

NNU49

d = 30 – 120 mm

Main dimensions			Basic load ratings		Fatigue limit load	Limiting speeds		Mass	Designation[1]
d	D	B	dyn. C_r	stat. C_{0r}	C_{ur}	n_G grease	n_G oil[2]	m	X-life ➤ *1144*
			N	N	N	min^{-1}	min^{-1}	≈ kg	
30	55	19	30 000	31 000	4 550	20 600	24 200	0,18	**NN3006-D-K-TVP-SP-XL**
35	62	20	40 500	41 500	6 700	17 800	20 900	0,24	**NN3007-D-K-TVP-SP-XL**
40	68	21	46 500	52 000	8 400	16 200	19 100	0,28	**NN3008-D-K-TVP-SP-XL**
45	75	23	59 000	65 000	10 200	14 400	16 900	0,36	**NN3009-D-K-TVP-SP-XL**
50	80	23	63 000	73 000	11 300	13 500	15 900	0,39	**NN3010-D-K-TVP-SP-XL**
55	90	26	82 000	97 000	15 800	11 900	14 100	0,59	**NN3011-D-K-TVP-SP-XL**
60	95	26	87 000	106 000	17 400	11 300	13 300	0,63	**NN3012-D-K-TVP-SP-XL**
65	100	26	91 000	116 000	19 000	10 800	12 700	0,67	**NN3013-D-K-TVP-SP-XL**
70	110	30	113 000	145 000	21 200	9 700	11 400	0,98	**NN3014-D-K-TVP-SP-XL**
75	115	30	112 000	146 000	21 400	9 300	11 000	1,02	**NN3015-D-K-TVP-SP-XL**
80	125	34	139 000	182 000	28 000	8 500	10 000	1,42	**NN3016-D-K-TVP-SP-XL**
85	130	34	138 000	183 000	27 500	8 200	9 700	1,48	**NN3017-D-K-TVP-SP-XL**
90	140	37	162 000	216 000	33 500	7 600	8 900	1,93	**NN3018-D-K-TVP-SP-XL**
95	145	37	170 000	234 000	36 000	7 300	8 600	2,03	**NN3019-D-K-TVP-SP-XL**
100	140	40	128 000	255 000	33 500	5 700	6 700	1,88	**NNU4920-S-K-M-SP**
	150	37	169 000	235 000	35 500	7 100	8 300	2,09	**NN3020-D-K-TVP-SP-XL**
105	145	40	130 000	260 000	34 500	5 500	6 500	1,93	**NNU4921-S-K-M-SP**
	160	41	226 000	310 000	49 000	6 500	7 600	2,68	**NN3021-D-K-TVP-SP-XL**
110	150	40	132 000	270 000	35 000	5 400	6 300	2,01	**NNU4922-S-K-M-SP**
	170	45	260 000	360 000	57 000	6 000	7 100	3,41	**NN3022-D-K-TVP-SP-XL**
120	165	45	175 000	340 000	41 000	4 750	5 600	2,78	**NNU4924-S-K-M-SP**
	180	46	275 000	390 000	61 000	5 700	6 700	3,72	**NN3024-D-K-TVP-SP-XL**

medias *https://www.schaeffler.de/std/1F9A*

[1] The bearings are also available with a cylindrical bore (without suffix K), ordering example: NN3006-D-TVP-SP-XL.

[2] Minimal quantity oil lubrication.

[3] Axial displacement of outer ring from central position.

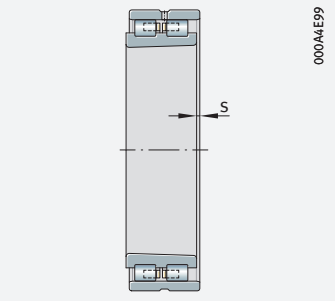

Axial displacement

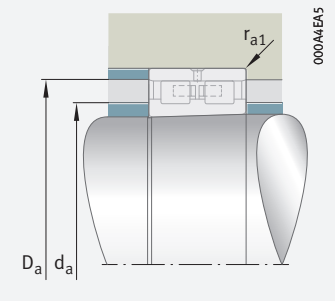

Mounting dimensions

Dimensions							Mounting dimensions		
d	r_1 min.	$s^{3)}$	E	F	n_s	d_s	d_a h12	D_a H12	r_{a1} max.
30	1	1,7	48,5	–	–	–	38,5	50	1
35	1	1,4	55	–	–	–	43	56,5	1
40	1	1,7	61	–	–	–	49	62,6	1
45	1	1,7	67,5	–	–	–	53,5	69,2	1
50	1	1,7	72,5	–	–	–	58,5	74,2	1
55	1,1	1,9	81	–	–	–	65	82,9	1
60	1,1	1,9	86,1	–	–	–	70,1	88	1
65	1,1	1,9	91	–	–	–	75	92,9	1
70	1,1	2,3	100	–	–	–	82	102,3	1
75	1,1	2,3	105	–	–	–	87	107,3	1
80	1,1	2,5	113	–	–	–	93	115,6	1
85	1,1	2,5	118	–	–	–	98	120,6	1
90	1,5	2,5	127	–	–	–	105	129,8	1,5
95	1,5	2,5	132	–	–	–	110	134,8	1,5
100	1,1	2	–	113	3,2	6,5	112	129	1
	1,5	2,5	137	–	–	–	115	139,8	1,5
105	1,1	2	–	118	3,2	6,5	117	134	1
	2	2,6	146	–	–	–	120	149	2
110	1,1	2	–	123	3,2	6,5	122	139	1
	2	2,9	155	–	–	–	127	158,3	2
120	1,1	2,3	–	134,5	3,2	6,5	133,4	154,5	1
	2	3,1	165	–	–	–	137	168,4	2

Super precision cylindrical roller bearings

Double row
Non-locating bearings

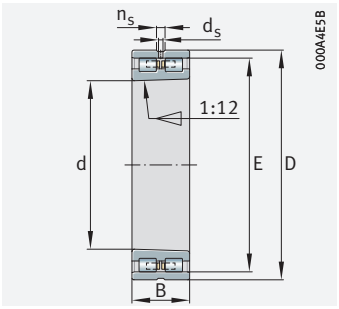

NN30

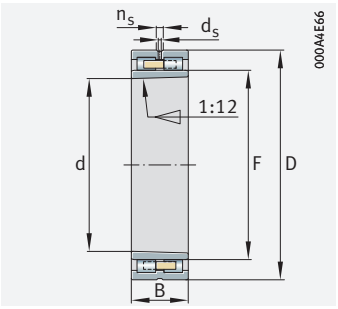

NNU49

d = 130 – 300 mm

Main dimensions			Basic load ratings		Fatigue limit load	Limiting speeds		Mass	Designation[1]
d	D	B	dyn. C_r	stat. C_{0r}	C_{ur}	n_G grease	n_G oil[2]	m	
			N	N	N	min^{-1}	min^{-1}	≈ kg	
130	180	50	188 000	385 000	45 500	4 450	5 300	3,81	**NNU4926-S-K-M-SP**
	200	52	295 000	500 000	63 000	4 100	4 800	5,84	**NN3026-AS-K-M-SP**
140	190	50	190 000	400 000	46 000	4 250	5 000	4,04	**NNU4928-S-K-M-SP**
	210	53	300 000	520 000	64 000	3 900	4 600	6,22	**NN3028-AS-K-M-SP**
150	210	60	330 000	650 000	82 000	3 550	4 200	6,1	**NNU4930-S-K-M-SP**
	225	56	335 000	590 000	73 000	3 650	4 250	7,59	**NN3030-AS-K-M-SP**
160	220	60	335 000	680 000	84 000	3 400	4 000	6,46	**NNU4932-S-K-M-SP**
	240	60	375 000	670 000	82 000	3 400	4 000	9,23	**NN3032-AS-K-M-SP**
170	230	60	340 000	700 000	86 000	3 300	3 850	6,9	**NNU4934-S-K-M-SP**
	260	67	450 000	800 000	97 000	3 100	3 650	12,5	**NN3034-AS-K-M-SP**
180	250	69	405 000	860 000	104 000	3 000	3 550	9,96	**NNU4936-S-K-M-SP**
	280	74	570 000	1 000 000	118 000	2 850	3 300	16,4	**NN3036-AS-K-M-SP**
190	260	69	410 000	880 000	106 000	2 900	3 450	10,6	**NNU4938-S-K-M-SP**
	290	75	580 000	1 040 000	122 000	2 750	3 200	17,3	**NN3038-AS-K-M-SP**
200	280	80	490 000	1 040 000	125 000	2 700	3 200	14,7	**NNU4940-S-K-M-SP**
	310	82	660 000	1 190 000	142 000	2 550	3 000	22,2	**NN3040-AS-K-M-SP**
220	300	80	510 000	1 140 000	133 000	2 550	3 000	16,3	**NNU4944-S-K-M-SP**
	340	90	810 000	1 450 000	166 000	2 290	2 700	29,1	**NN3044-AS-K-M-SP**
240	320	80	530 000	1 210 000	138 000	2 400	2 800	17,1	**NNU4948-S-K-M-SP**
	360	92	840 000	1 580 000	177 000	2 170	2 550	31,5	**NN3048-AS-K-M-SP**
260	360	100	750 000	1 690 000	190 000	2 070	2 430	30,4	**NNU4952-S-K-M-SP**
	400	104	1 070 000	2 010 000	223 000	1 930	2 280	46,2	**NN3052-AS-K-M-SP**
280	380	100	770 000	1 790 000	198 000	1 970	2 320	32,5	**NNU4956-S-K-M-SP**
	420	106	1 090 000	2 090 000	228 000	1 850	2 170	49,7	**NN3056-AS-K-M-SP**
300	420	118	1 040 000	2 380 000	265 000	1 740	2 040	48,6	**NNU4960-S-K-M-SP**
	460	118	1 270 000	2 400 000	260 000	1 670	1 970	68,5	**NN3060-AS-K-M-SP**

medias *https://www.schaeffler.de/std/1F9A*

[1] The bearings are also available with a cylindrical bore (without suffix K), ordering example: NN3006-D-TVP-SP-XL.

[2] Minimal quantity oil lubrication.

[3] Axial displacement of outer ring from central position.

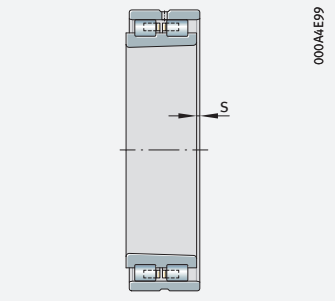

Axial displacement

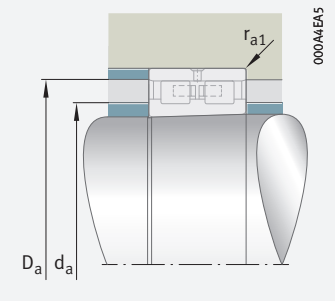

Mounting dimensions

Dimensions							Mounting dimensions		
d	r_1 min.	$s^{3)}$	E	F	n_s	d_s	d_a h12	D_a H12	r_{a1} max.
130	1,5	2,7	–	146	3,2	6,5	144,7	166	1,5
	2	3,1	182	–	4,8	9,5	150	186	2
140	1,5	2,7	–	156	3,2	6,5	155,1	176	1,5
	2	3,4	192	–	4,8	9,5	160	196	2
150	2	2,7	–	168,5	3,2	6,5	167,2	196,5	2
	2,1	3,8	206	–	4,8	9,5	172	210	2,1
160	2	2,7	–	178,5	3,2	6,5	177,2	206,5	2
	2,1	4,3	219	–	4,8	9,5	183	224	2,1
170	2	2,7	–	188,5	3,2	6,5	187,2	216,5	2
	2,1	4,6	236	–	4,8	9,5	196	241	2,1
180	2	3,2	–	202	4,8	9,5	200,5	232	2
	2,1	4,8	255	–	6,3	12,2	209	260	2,1
190	2	3,2	–	212	4,8	9,5	210,5	242	2
	2,1	4,8	265	–	6,3	12,2	219	271	2,1
200	2,1	4,3	–	225	6,3	12,2	223	259	2,1
	2,1	5,7	282	–	6,3	12,2	232	288	2,1
220	2,1	4,3	–	245	6,3	12,2	243	279	2,1
	3	5,7	310	–	8	15	254	317	2,5
240	2,1	4,3	–	265	6,3	12,2	263	299	2,1
	3	6,1	330	–	8	15	274	337	2,5
260	2,1	5,4	–	292	8	15	289,4	334	2,1
	4	6,6	364	–	8	15	300	372	3
280	2,1	5,4	–	312	8	15	309,4	354	2,1
	4	6,9	384	–	8	15	320	392	3
300	3	6,3	–	339	9,5	17,7	336	389	2,5
	4	7,5	418	–	9,5	17,7	346	427	3

Super precision cylindrical roller bearings

Double row
Non-locating bearings

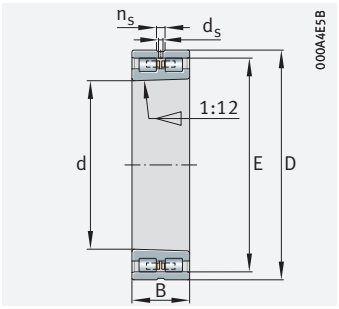

NN30

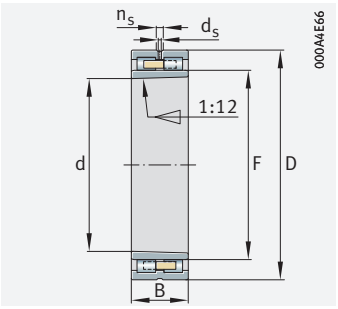

NNU49

d = 320 – 500 mm

Main dimensions			Basic load ratings		Fatigue limit load	Limiting speeds		Mass	Designation[1]
d	D	B	dyn. C_r	stat. C_{0r}	C_{ur}	n_G grease	n_G oil[2]	m	
			N	N	N	min^{-1}	min^{-1}	≈ kg	
320	440	118	1 070 000	2 550 000	275 000	1 670	1 960	52,5	**NNU4964-S-K-M-SP**
	480	121	1 330 000	2 600 000	275 000	1 610	1 890	73,8	**NN3064-AS-K-M-SP**
340	460	118	1 100 000	2 650 000	290 000	1 600	1 890	55,7	**NNU4968-S-K-M-SP**
	520	133	1 640 000	3 250 000	340 000	1 470	1 730	99,3	**NN3068-AS-K-M-SP**
360	480	118	1 130 000	2 800 000	300 000	1 540	1 820	57,3	**NNU4972-S-K-M-SP**
	540	134	1 670 000	3 350 000	350 000	1 420	1 670	104	**NN3072-AS-K-M-SP**
380	520	140	1 440 000	3 600 000	375 000	1 380	1 620	86,9	**NNU4976-S-K-M-SP**
	560	135	1 700 000	3 500 000	355 000	1 370	1 620	110	**NN3076-AS-K-M-SP**
400	540	140	1 490 000	3 800 000	390 000	1 330	1 570	91	**NNU4980-S-K-M-SP**
	600	148	2 150 000	4 450 000	445 000	1 260	1 480	143	**NN3080-AS-K-M-SP**
420	560	140	1 530 000	4 000 000	405 000	1 290	1 520	94,4	**NNU4984-S-K-M-SP**
	620	150	2 140 000	4 450 000	440 000	1 220	1 440	150	**NN3084-AS-K-M-SP**
440	600	160	2 040 000	5 200 000	530 000	1 150	1 360	130	**NNU4988-S-K-M-SP**
	650	157	2 430 000	5 100 000	500 000	1 160	1 360	172	**NN3088-AS-K-M-SP**
460	620	160	2 110 000	5 500 000	560 000	1 120	1 320	134	**NNU4992-S-K-M-SP**
	680	163	2 600 000	5 400 000	510 000	1 100	1 300	197	**NN3092-AS-K-M-SP**
480	650	170	2 350 000	6 100 000	610 000	1 060	1 250	158	**NNU4996-S-K-M-SP**
	700	165	2 700 000	5 800 000	540 000	1 070	1 260	208	**NN3096-AS-K-M-SP**
500	670	170	2 330 000	6 100 000	600 000	1 030	1 220	163	**NNU49/500-S-K-M-SP**
	720	167	2 700 000	5 800 000	530 000	1 050	1 230	214	**NN30/500-AS-K-M-SP**

medias *https://www.schaeffler.de/std/1F9A*

[1] The bearings are also available with a cylindrical bore (without suffix K), ordering example: NN3006-D-TVP-SP-XL.

[2] Minimal quantity oil lubrication.

[3] Axial displacement of outer ring from central position.

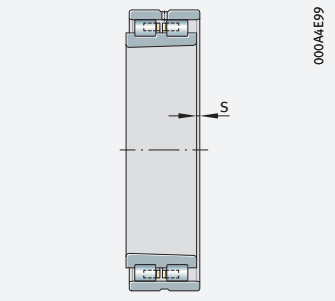

Axial displacement

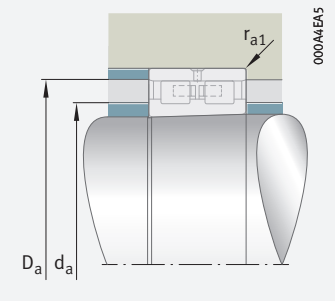

Mounting dimensions

Dimensions							Mounting dimensions		
d	r_1 min.	$s^{3)}$	E	F	n_s	d_s	d_a h12	D_a H12	r_{a1} max.
320	3	6,3	–	359	9,5	17,7	356	409	2,5
	4	8	438	–	9,5	17,7	366	447	3
340	3	6,3	–	379	9,5	17,7	376	429	2,5
	5	8,8	473	–	9,5	17,7	393	483	4
360	3	6,3	–	399	9,5	17,7	396	449	2,5
	5	8,8	493	–	9,5	17,7	413	503	4
380	4	7,2	–	426	9,5	17,7	422,6	482	3
	5	9,1	513	–	9,5	17,7	433	523	4
400	4	7,2	–	446	9,5	17,7	442,6	502	3
	5	9,5	549	–	9,5	17,7	459	560	4
420	4	7,2	–	466	9,5	17,7	462,6	522	3
	5	10	569	–	9,5	17,7	479	580	4
440	4	6,8	–	490	9,5	17,7	486,8	558	3
	6	10,2	597	–	12,5	23,5	501	609	5
460	4	6,8	–	510	9,5	17,7	506,8	578	3
	6	10,9	624	–	12,5	23,5	524	636	5
480	5	7,2	–	534	9,5	17,7	530,6	606	4
	6	11,2	644	–	12,5	23,5	544	656	5
500	5	7,2	–	554	9,5	17,7	550,6	626	4
	6	11,7	664	–	12,5	23,5	564	677	5

Super precision axial angular contact ball bearings 2344

Double direction

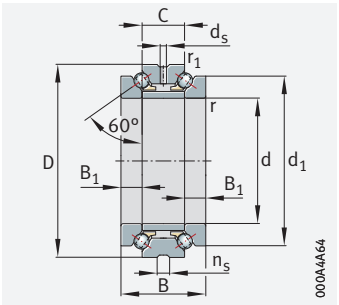

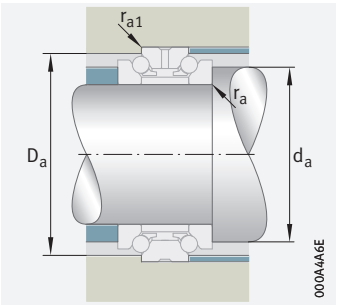

Mounting dimensions

d = 30 – 280 mm

Main dimensions				Basic load ratings		Fatigue limit load	Limiting speeds		Mass	Designation
d	D	B	C	dyn. C_a	stat. C_{0a}	C_{ua}	n_G grease	n_G oil	m	
				N	N	N	min^{-1}	min^{-1}	≈ kg	
30	55	32	16	15 300	36 000	3 350	11 000	16 000	0,29	**234406-M-SP**
35	62	34	17	18 900	47 000	4 350	9 500	14 000	0,38	**234407-M-SP**
40	68	36	18	22 900	59 000	5 400	8 500	12 000	0,463	**234408-M-SP**
45	75	38	19	25 000	67 000	6 200	7 500	10 000	0,579	**234409-M-SP**
50	80	38	19	26 000	72 000	6 600	7 000	9 500	0,629	**234410-M-SP**
55	90	44	22	36 500	99 000	9 200	6 300	8 500	0,944	**234411-M-SP**
60	95	44	22	36 000	98 000	9 100	6 000	8 000	1,01	**234412-M-SP**
65	100	44	22	38 500	111 000	10 300	5 600	7 500	1,08	**234413-M-SP**
70	110	48	24	46 000	134 000	12 400	5 300	7 000	1,49	**234414-M-SP**
75	115	48	24	47 500	144 000	13 300	5 000	6 700	1,57	**234415-M-SP**
80	125	54	27	56 000	175 000	15 900	4 500	6 000	2,16	**234416-M-SP**
85	130	54	27	57 000	181 000	16 100	4 500	6 000	2,25	**234417-M-SP**
90	140	60	30	66 000	213 000	18 200	4 000	5 300	2,92	**234418-M-SP**
95	145	60	30	66 000	219 000	18 400	4 000	5 300	3,04	**234419-M-SP**
100	150	60	30	67 000	226 000	18 600	3 800	5 000	3,17	**234420-M-SP**
105	160	66	33	74 000	250 000	20 000	3 600	4 800	4,07	**234421-M-SP**
110	170	72	36	98 000	325 000	25 000	3 400	4 500	5,19	**234422-M-SP**
120	180	72	36	101 000	345 000	26 000	3 200	4 300	5,56	**234424-M-SP**
130	200	84	42	128 000	440 000	31 500	2 800	3 800	8,28	**234426-M-SP**
140	210	84	42	132 000	470 000	32 500	2 600	3 600	8,78	**234428-M-SP**
150	225	90	45	142 000	520 000	35 000	2 600	3 600	10,8	**234430-M-SP**
160	240	96	48	168 000	600 000	39 000	2 400	3 400	12,9	**234432-M-SP**
170	260	108	54	207 000	740 000	46 500	2 200	3 200	17,7	**234434-M-SP**
180	280	120	60	235 000	840 000	51 000	2 000	3 000	23,4	**234436-M-SP**
190	290	120	60	244 000	900 000	53 000	1 900	2 800	24,7	**234438-M-SP**
200	310	132	66	285 000	1 060 000	61 000	1 800	2 600	31,5	**234440-M-SP**
220	340	144	72	340 000	1 330 000	73 000	1 600	2 200	41,7	**234444-M-SP**
240	360	144	72	350 000	1 420 000	75 000	1 500	2 000	43,8	**234448-M-SP**
260	400	164	82	400 000	1 680 000	85 000	1 400	1 900	64,5	**234452-M-SP**
280	420	164	82	415 000	1 790 000	88 000	1 300	1 800	69	**234456-M-SP**

medias *https://www.schaeffler.de/std/1F9A*

Dimensions							Mounting dimensions			
d	d_1	B_1	r min.	r_1 min.	d_s	n_s	d_a h12	D_a H12	r_a max.	r_{a1} max.
30	47	8	1	0,15	3,2	4,8	40,5	50,5	1	0,15
35	53	8,5	1	0,15	3,2	4,8	46,5	57	1	0,15
40	58,5	9	1	0,15	3,2	4,8	51,5	63,5	1	0,15
45	65	9,5	1	0,15	3,2	4,8	57,5	70	1	0,15
50	70	9,5	1	0,15	3,2	4,8	62,5	75	1	0,15
55	78	11	1,1	0,3	3,2	6,5	69	84,5	1,1	0,3
60	83	11	1,1	0,3	3,2	6,5	74	89,5	1,1	0,3
65	88	11	1,1	0,3	3,2	6,5	79	94,5	1,1	0,3
70	97	12	1,1	0,3	3,2	6,5	86,5	103,5	1,1	0,3
75	102	12	1,1	0,3	3,2	6,5	91,5	108,5	1,1	0,3
80	110	13,5	1,1	0,3	3,2	6,5	98,5	117	1,1	0,3
85	115	13,5	1,1	0,3	4,8	9,5	103,5	122	1,1	0,3
90	123	15	1,5	0,3	4,8	9,5	110,5	130,5	1,5	0,3
95	128	15	1,5	0,3	4,8	9,5	115,5	135,5	1,5	0,3
100	133	15	1,5	0,3	4,8	9,5	120,5	140,5	1,5	0,3
105	142	16,5	2	0,6	4,8	9,5	128	150	2	0,6
110	150	18	2	0,6	4,8	9,5	134,5	160	2	0,6
120	160	18	2	0,6	4,8	9,5	144,5	170	2	0,6
130	177	21	2	0,6	6,3	12,2	159	188	2	0,6
140	187	21	2,1	0,6	6,3	12,2	169	198	2,1	0,6
150	200	22,5	2,1	0,6	8	15	181	211,5	2,1	0,6
160	212	24	2,1	0,6	8	15	192,5	226	2,1	0,6
170	230	27	2,1	0,6	8	15	206,5	245	2,1	0,6
180	248	30	2,1	0,6	8	15	221	263	2,1	0,6
190	258	30	2,1	0,6	8	15	231	273	2,1	0,6
200	274	33	2,1	0,6	8	15	245	291,5	2,1	0,6
220	304	36	3	1,1	9,5	17,7	269	318	3	1
240	322	36	3	1,1	9,5	17,7	289	338	3	1
260	354	41	4	1,5	9,5	17,7	317,5	374,5	4	1,5
280	374	41	4	1,5	9,5	17,7	337,5	394,5	4	1,5



Super precision angular contact ball bearings BAX

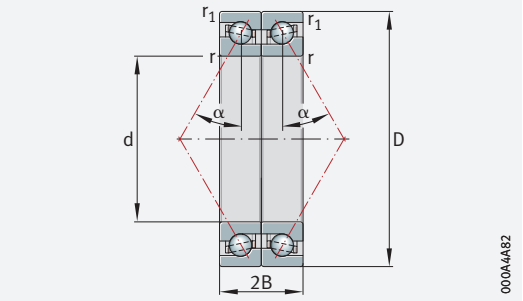

d = 50 – 110 mm

Main dimensions			Basic load ratings		Fatigue limit load	Limiting speeds		Mass	Designation
d	D	2B	dyn. C_a	stat. C_{0a}	C_{ua}	n_G grease	n_G oil	m	
			N	N	N	min^{-1}	min^{-1}	≈ kg	
50	80	28,5	20 300	38 000	3 500	13 000	18 000	0,5	**BAX50-F-T-P4S-DBL**
	80	28,5	25 000	49 500	4 600	11 000	15 000	0,5	**BAX50-H-T-P4S-DBL**
55	90	33	24 200	46 000	4 300	11 000	16 000	0,74	**BAX55-F-T-P4S-DBL**
	90	33	30 000	61 000	5 600	9 500	14 000	0,74	**BAX55-H-T-P4S-DBL**
60	95	33	24 700	49 000	4 550	11 000	15 000	0,8	**BAX60-F-T-P4S-DBL**
	95	33	30 500	64 000	5 900	9 000	13 000	0,8	**BAX60-H-T-P4S-DBL**
65	100	33	26 000	54 000	5 000	10 000	14 000	0,84	**BAX65-F-T-P4S-DBL**
	100	33	32 000	70 000	6 500	8 500	12 000	0,84	**BAX65-H-T-P4S-DBL**
70	110	36	30 000	64 000	5 900	9 000	13 000	1,18	**BAX70-F-T-P4S-DBL**
	110	36	37 000	83 000	7 700	7 500	11 000	1,18	**BAX70-H-T-P4S-DBL**
75	115	36	30 500	67 000	6 200	8 500	12 000	1,24	**BAX75-F-T-P4S-DBL**
	115	36	37 500	87 000	8 000	7 500	10 000	1,24	**BAX75-H-T-P4S-DBL**
80	125	40,5	40 000	88 000	8 000	8 000	11 000	1,68	**BAX80-F-T-P4S-DBL**
	125	40,5	49 500	115 000	10 500	6 700	9 500	1,68	**BAX80-H-T-P4S-DBL**
85	130	40,5	41 000	92 000	8 200	7 500	11 000	1,98	**BAX85-F-T-P4S-DBL**
	130	40,5	50 000	120 000	10 700	6 300	9 000	1,98	**BAX85-H-T-P4S-DBL**
90	140	45	49 500	108 000	9 300	7 000	10 000	2,3	**BAX90-F-T-P4S-DBL**
	140	45	61 000	141 000	12 100	6 000	8 500	2,3	**BAX90-H-T-P4S-DBL**
95	145	45	51 000	113 000	9 500	6 700	9 500	2,4	**BAX95-F-T-P4S-DBL**
	145	45	62 000	147 000	12 500	5 600	8 000	2,4	**BAX95-H-T-P4S-DBL**
100	150	45	52 000	118 000	9 800	6 300	9 000	2,58	**BAX100-F-T-P4S-DBL**
	150	45	63 000	154 000	12 800	5 600	8 000	2,58	**BAX100-H-T-P4S-DBL**
105	160	49,5	52 000	124 000	10 000	6 000	8 500	3,2	**BAX105-F-T-P4S-DBL**
	160	49,5	64 000	162 000	13 000	5 300	7 500	3,2	**BAX105-H-T-P4S-DBL**
110	170	54	64 000	150 000	11 700	5 600	8 000	4,12	**BAX110-F-T-P4S-DBL**
	170	54	78 000	195 000	15 300	4 800	7 000	4,12	**BAX110-H-T-P4S-DBL**

medias *https://www.schaeffler.de/std/1F9A*

[1] Light preload.

[2] Moderate preload.

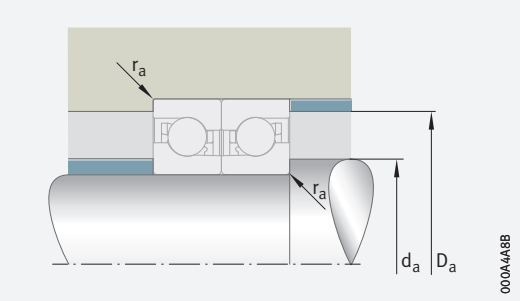

Mounting dimensions

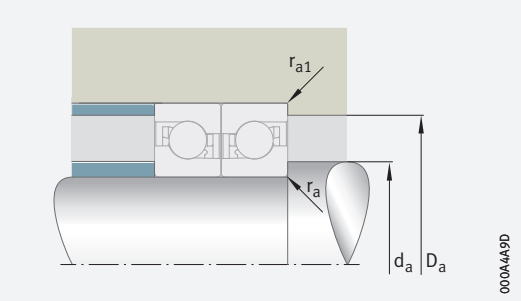

Mounting dimensions

Dimensions			Contact angle	Mounting dimensions				Preload force F_V		Lift-off force K_{aE}		Axial rigidity c_a	
d	r	r_1	α	d_a h12	D_a H12	r_a	r_{a1}	L[1]	M[2]	L[1]	M[2]	L[1]	M[2]
	min.	min.	°			max.	max.	N	N	N	N	N/µm	N/µm
50	0,6	0,6	30	57	73	0,6	0,6	84	416	240	1 214	123	216
	0,6	0,6	40	57	73	0,6	0,6	107	595	304	1 711	200	361
55	0,6	0,6	30	63,5	81,5	0,6	0,6	88	436	251	1 269	129	226
	0,6	0,6	40	63,5	81,5	0,6	0,6	144	741	410	2 131	229	401
60	0,6	0,6	30	68,5	86,5	0,6	0,6	110	517	315	1 508	143	247
	0,6	0,6	40	68,5	86,5	0,6	0,6	143	747	407	2 147	235	415
65	0,6	0,6	30	73,5	91,5	0,6	0,6	120	554	343	1 615	156	268
	0,6	0,6	40	73,5	91,5	0,6	0,6	155	792	441	2 276	256	448
70	0,6	0,6	30	80,5	99,5	0,6	0,6	149	661	426	1 928	173	293
	0,6	0,6	40	80,5	99,5	0,6	0,6	194	944	552	2 713	284	489
75	0,6	0,6	30	85,5	104,5	0,6	0,6	149	668	426	1 947	178	302
	0,6	0,6	40	85,5	104,5	0,6	0,6	194	955	552	2 744	292	504
80	0,6	0,6	30	91	113,5	0,6	0,6	217	903	621	2 633	206	342
	0,6	0,6	40	91	113,5	0,6	0,6	297	1 323	845	3 803	345	577
85	0,6	0,6	30	96	118,5	0,6	0,6	220	922	630	2 688	213	354
	0,6	0,6	40	96	118,5	0,6	0,6	297	1 332	845	3 828	354	594
90	0,6	0,6	30	102	128	0,6	0,6	300	1 181	860	3 447	234	381
	0,6	0,6	40	102	128	0,6	0,6	406	1 700	1 156	4 888	389	637
95	0,6	0,6	30	107	133	0,6	0,6	296	1 188	848	3 465	239	392
	0,6	0,6	40	107	133	0,6	0,6	400	1 711	1 139	4 918	398	657
100	0,6	0,6	30	112	138	0,6	0,6	299	1 206	856	3 516	247	404
	0,6	0,6	40	112	138	0,6	0,6	404	1 740	1 150	5 000	410	678
105	1	1	30	119,5	145,5	1	1	297	1 216	850	3 543	253	416
	1	1	40	119,5	145,5	1	1	396	1 737	1 127	4 989	418	695
110	1	1	30	125,5	154,5	1	1	380	1 495	1 088	4 357	278	451
	1	1	40	125,5	154,5	1	1	524	2 178	1 491	6 258	466	760

Super precision angular contact ball bearings BAX

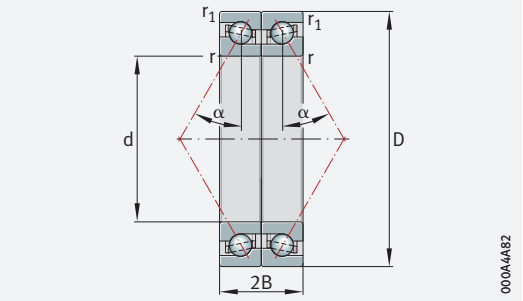

d = 120 – 200 mm

Main dimensions			Basic load ratings		Fatigue limit load	Limiting speeds		Mass	Designation
d	D	2B	dyn. C_a	stat. C_{0a}	C_{ua}	n_G grease	n_G oil	m	
			N	N	N	min^{-1}	min^{-1}	≈ kg	
120	180	54	66 000	163 000	12 300	5 300	7 500	4,42	**BAX120-F-T-P4S-DBL**
	180	54	81 000	212 000	16 100	4 500	6 300	4,42	**BAX120-H-T-P4S-DBL**
130	200	63	90 000	217 000	15 700	4 800	7 000	6,54	**BAX130-F-T-P4S-DBL**
	200	63	111 000	285 000	20 400	4 000	6 000	6,54	**BAX130-H-T-P4S-DBL**
140	210	63	94 000	237 000	16 600	4 500	6 700	6,96	**BAX140-F-T-P4S-DBL**
	210	63	115 000	310 000	21 700	3 800	5 600	6,96	**BAX140-H-T-P4S-DBL**
150	225	67,5	101 000	255 000	17 300	4 300	6 000	8,2	**BAX150-F-T-P4S-DBL**
	225	67,5	124 000	335 000	22 500	3 600	5 300	8,2	**BAX150-H-T-P4S-DBL**
160	240	72	111 000	290 000	19 000	4 000	5 600	10,6	**BAX160-F-T-P4S-DBL**
	240	72	136 000	380 000	24 700	3 400	4 800	10,6	**BAX160-H-T-P4S-DBL**
170	260	81	143 000	370 000	23 200	3 800	5 300	13,4	**BAX170-F-T-P4S-DBL**
	260	81	175 000	480 000	30 500	3 200	4 500	13,4	**BAX170-H-T-P4S-DBL**
180	280	90	177 000	450 000	27 500	3 400	5 000	17,8	**BAX180-F-T-P4S-DBL**
	280	90	218 000	590 000	36 000	3 000	4 300	17,8	**BAX180-H-T-P4S-DBL**
190	290	90	181 000	470 000	28 000	3 400	4 800	18,6	**BAX190-F-T-P4S-DBL**
	290	90	222 000	610 000	36 500	2 800	4 000	18,6	**BAX190-H-T-P4S-DBL**
200	310	99	183 000	495 000	28 500	3 200	4 500	24	**BAX200-F-T-P4S-DBL**
	310	99	225 000	640 000	37 500	2 600	3 800	24	**BAX200-H-T-P4S-DBL**

medias *https://www.schaeffler.de/std/1F9A*

1) Light preload.

2) Moderate preload.

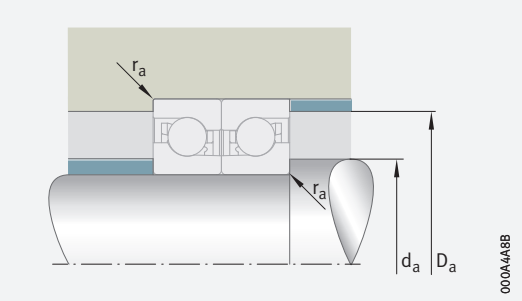

Mounting dimensions

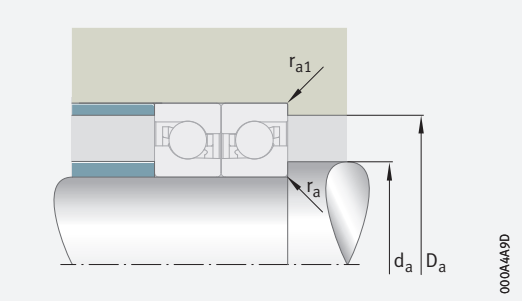

Mounting dimensions

Dimensions			Contact angle	Mounting dimensions				Preload force F_V		Lift-off force K_{aE}		Axial rigidity c_a	
d	r	r_1	α	d_a h12	D_a H12	r_a	r_{a1}	L[1]	M[2]	L[1]	M[2]	L[1]	M[2]
	min.	min.	°			max.	max.	N	N	N	N	N/µm	N/µm
120	1	1	30	135,5	164,5	1	1	392	1 554	1 122	4 525	296	481
	1	1	40	135,5	164,5	1	1	543	2 275	1 545	6 535	496	811
130	1	1	30	147,5	182,5	1	1	603	2 235	1 729	6 518	338	538
	1	1	40	147,5	182,5	1	1	850	3 280	2 421	9 429	570	907
140	1	1	30	157,5	192,5	1	1	621	2 317	1 779	6 752	360	573
	1	1	40	157,5	192,5	1	1	865	3 372	2 463	9 688	604	965
150	1,1	1,1	30	169	206	1,1	1,1	674	2 494	1 931	7 266	375	596
	1,1	1,1	40	169	206	1,1	1,1	938	3 623	2 670	10 408	630	1 003
160	1,1	1,1	30	180,5	219,5	1,1	1,1	752	2 764	2 154	8 049	405	641
	1,1	1,1	40	180,5	219,5	1,1	1,1	1 052	4 028	2 995	11 569	681	1 080
170	1,1	1,1	30	192,5	237,5	1,1	1,1	1 016	3 609	2 912	10 517	448	702
	1,1	1,1	40	192,5	237,5	1,1	1,1	1 447	5 305	4 121	15 244	758	1 185
180	1,1	1,1	30	204	255,5	1,1	1,1	1 329	4 610	3 811	13 438	498	775
	1,1	1,1	40	204	255,5	1,1	1,1	1 910	6 798	5 441	19 538	846	1 310
190	1,1	1,1	30	214	265,5	1,1	1,1	1 082	4 261	3 096	12 394	477	773
	1,1	1,1	40	214	265,5	1,1	1,1	1 503	6 245	4 276	17 927	801	1 306
200	1,1	1,1	30	229	280,5	1,1	1,1	1 089	4 312	3 116	12 537	490	796
	1,1	1,1	40	229	280,5	1,1	1,1	1 501	6 286	4 270	18 039	822	1 343

2 Bearings for screw drives

2.1 General features

✎ *Design variants*

Bearings for screw drives are available as:

- axial angular contact ball bearings
  - double row, for screw mounting ➤ *1249* | *1*
  - double row, not for screw mounting ➤ *1249* | *2*
  - single row, for any combination ➤ *1249* | *3*
  - angular contact ball bearing unit, for screw mounting ➤ *1249* | *4*
  - double row or triple row, flange with flattened areas, for screw mounting ➤ *1250* | *5*
- needle roller/axial cylindrical roller bearings
  - for screw mounting
  - not for screw mounting
- with accessories
  - seal carrier assembly
  - precision locknuts
  - sockets
  - free-of-charge calculation using BEARINX-online Easy Ballscrew

Product catalogue

The standard range of these bearings is described in detail in Technical Product Information TPI 123, Bearings for Screw Drives, and in our electronic product catalogue ***medias*** *professional*.

✎ *Downloading TPI 123*

Technical Product Information TPI 123 is available from Schaeffler at *https://www.schaeffler.de/std/1D5A*.

✎ ***medias***

The following link will take you to the Schaeffler electronic product selection and information system: *https://medias.schaeffler.com*.

✎ *App for services*

The app “PrecisionDesk” offers extensive services for rotary and linear bearings of a super precision design and assists fitters and engineers in the selection and mounting of bearings. Further information on PrecisionDesk ➤ *1360*, download *https://www.schaeffler.de/std/1D59*.

Calculations on screw drive bearing arrangements can be carried out free of charge using BEARINX-online Easy Ballscrew.

2.2 Axial angular contact ball bearings

Bearing design

✎ *Precision bearings for screw drive bearing arrangements*

Axial angular contact ball bearings are precision bearings for screw drive bearing arrangements. Depending on the series, they can support radial forces as well as axial forces in one or both directions. Contact seals protect the rolling element system against contamination and moisture. For higher speeds, non-contact minimal gap seals can be used.

✎ *With and without fixing holes*

The bearings are available with and without fixing holes in the outer ring. Bearings with holes are screw mounted directly on the adjacent construction. This solution is particularly economical since there is then no need for the locating bore that would otherwise be required or for the bearing cover with the associated matching work.

✎ *Available with less stringent tolerances*

For some areas of application, a bearing arrangement of lower precision is often sufficient. For this purpose, bearings with less stringent tolerances are available.

1
Axial angular contact ball bearings, double row, with fixing holes

① *With lip seals or minimal gap seals ZKLF..-2RS, ZKLF..-2Z, ZKLF..-2RS-PE*

② *Matched pair ZKLF..-2RS-2AP*

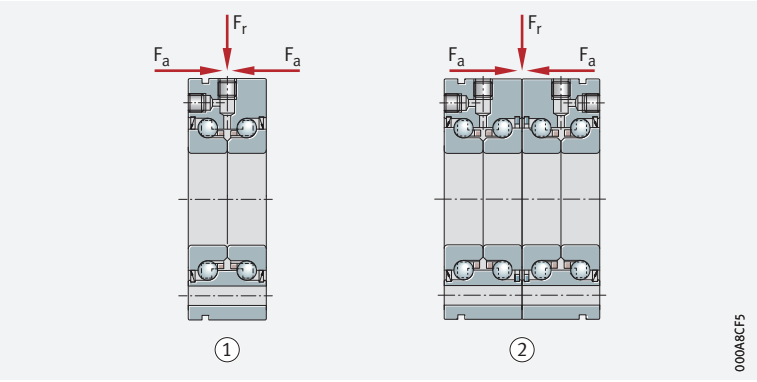

2
Axial angular contact ball bearings, double row, without fixing holes

① *With lip seals or minimal gap seals ZKLN..-2RS, ZKLN..-2Z, ZKLN..-2RS-PE*

② *Matched pair ZKLN..-2RS-2AP*

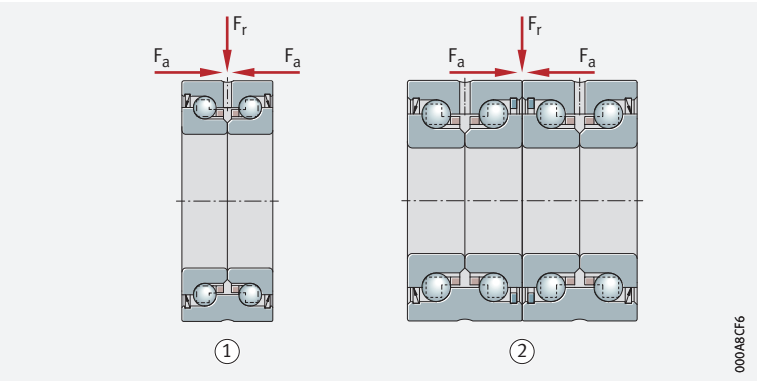

3
Axial angular contact ball bearings, single row, for any combination

① *Without seals 7602, 7603, BSB, BSB..-SU*

② *With seals 7602..-2RS, 7603..-2RS, BSB..-2RS, BSB..-2Z-SU*

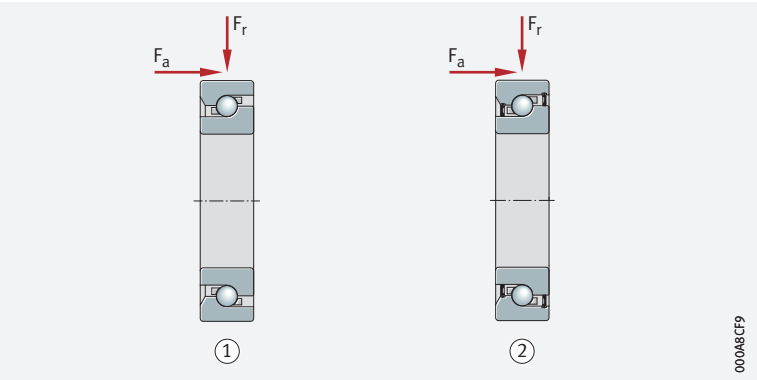

4
Angular contact ball bearing unit, with fixing holes

Lip seals or gap seals ZKLR..-2RS, ZKLR..-2Z

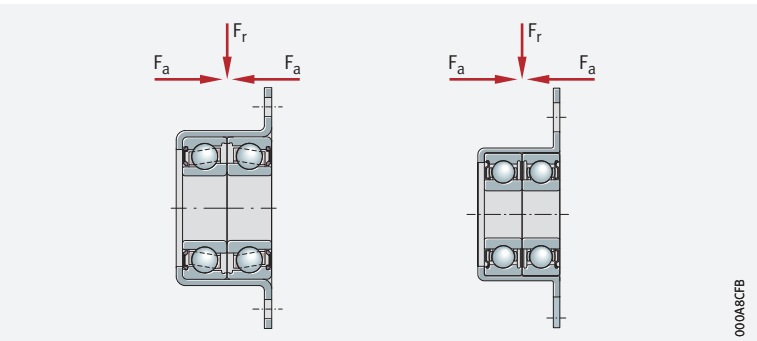

5
Axial angular contact ball bearings, double or triple row, flange with flattened areas, with fixing holes

① *Double row, lip seals or minimal gap seals ZKLFA..-2RS, ZKLFA..-2Z*
② *Triple row, lip seals DKLFA..-2RS*

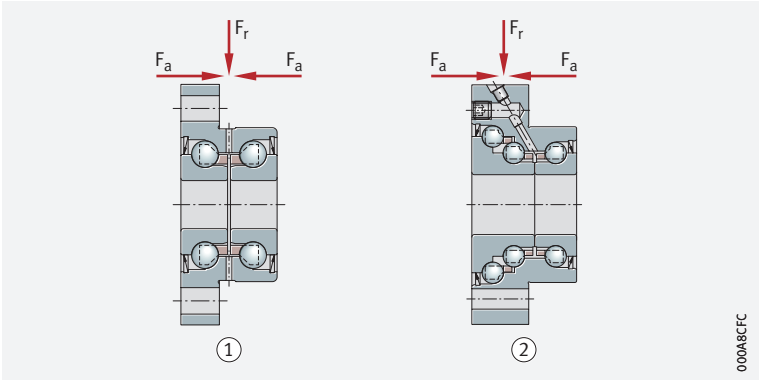

For special requirements

Screw drive bearing arrangements are subjected to requirements that often cannot be optimally fulfilled by the design construction of conventional bearings.

Wide product range

For the design of bearing arrangements that have high accuracy, high load carrying capacity, high rigidity, low friction, are easy to fit and maintenance-free or low-maintenance and are suitable for the highly dynamic operating conditions of threaded spindles, there is a wide range of INA and FAG axial angular contact ball bearings. With this product range, solutions can be found to all the technical and economic demands placed on the bearing arrangements of feed spindles ➤ *1256*.

Single row and multiple row designs

Axial angular contact ball bearings are available as single, double or triple row ready-to-fit units. They are self-retaining and comprise thick-walled, geometrically stable outer rings, ball and cage assemblies and one-piece or two-piece inner rings. In several series, the outer ring has through holes for simple flange mounting of the bearing to the adjacent construction. The bearing rings are matched to each other such that a defined preload is achieved when the rings are clamped in place using a precision locknut.

Axial and radial load capacity

Due to the 60° contact angle, the bearings can support high axial forces as well as radial forces.

In X or O arrangement

In arrangements of multiple row angular contact ball bearings, a distinction is made between O, X and tandem arrangements in relation to the arrangement of contact angles. The arrangement of contact angles has an essential influence on the tilting rigidity of the bearing position.

The characteristics of the O arrangement are:

- high tilting rigidity
- higher critical whirling speed of the threaded spindle due to the high tilting rigidity of the bearing position
- longer rating life under additional radial loads due, for example, to a belt drive

The characteristics of the X arrangement are:

- low tilting rigidity
- lower critical whirling speed of the threaded spindle
- shorter rating life under additional radial loads due, for example, to a belt drive

X-life premium quality

Axial angular contact ball bearings ZKLF, ZKLN and BSB..-SU-XL are supplied in the X-life design.

As a result of increased raceway accuracy and raceway quality, there is a significant reduction in the stress conditions present on the rolling elements and raceways under the same load, compared to the standard bearings. The improved quality gives reduced friction in the bearing and lower bearing temperatures; running resistance is lower, less strain is placed on the lubricant and the grease operating life and, where applicable, necessary relubrication intervals are extended. As a result of the lower frictional energy, there is a simultaneous increase in the energy efficiency of the bearing arrangement.

Higher basic load ratings and limiting speeds with X-life

The basic dynamic load ratings C_a of axial angular contact ball bearings in the X-life design are 10% higher than those of the previous standard designs. This leads to a longer rating life L_{10} or can be used to allow higher loads on the bearing arrangement while achieving the same rating life. The lower bearing friction and associated reduction in heat generation in the bearing permit significantly higher limiting speeds $n_{G\ grease}$.

Temperature range

Limiting values

The operating temperature of the bearings is limited by:

- the dimensional stability of the bearing rings and rolling elements
- the cage
- the lubricant
- the seals

Possible operating temperatures of axial angular contact ball bearings ➤*1251*|▦*1*.

▦1 *Permissible temperature range*

Operating temperature	Axial angular contact ball bearings	
	from	to
	–30 °C	+120 °C

The operating temperature influences the dynamic bearing characteristics. The values given in the product tables are based on a room temperature of +20 °C.

Cages

The axial angular contact ball bearings have plastic cages. The cage design is not indicated in the suffix.

In axial angular contact ball bearings 7602, 7603 and BSB, the polyamide cages are indicated by the suffix TVP or T.

Suffixes

For a description of the suffixes used in this chapter ➤*1251*|▦*2* and ***medias*** interchange *https://www.schaeffler.de/std/1D52*.

▦2 *Suffixes and corresponding descriptions*

Suffix	Description of suffix	
PE	Bearing design with less stringent tolerances	Standard
T, TVP	Polyamide cage	
2AP	Axial angular contact ball bearings, matched pair (ZKLN, ZKLF)	
2RS	Contact seal on both sides (lip seal)	
2Z	Minimal gap seal on both sides	
L055	Greased with high performance grease Arcanol MULTITOP	
SU	Universal bearing; single bearings can be used in sets in any combination required	
HC	Hybrid Ceramic, rings made from rolling bearing steel, balls made from ceramic	Special design, available by agreement

2.3 Needle roller/axial cylindrical roller bearings

Bearing design

Double direction

These precision bearings are double direction axial cylindrical roller bearings with a radial bearing component.

With and without fixing holes

The bearings are available with and without fixing holes in the outer ring. Bearings with holes are screw mounted directly on the adjacent construction. The large contact surface and the small pitch of the holes allow a connection to the adjacent construction that is extremely rigid and with low tendency to settling. There is therefore no need for the bearing cover that would otherwise be required to hold the bearing, and the matching work required.

If the axial abutment of the shaft locating washer is not sufficient or a seal raceway is required, bearings with a stepped shaft locating washer extended on one side are suitable.

6 *Needle roller/axial cylindrical roller bearings, for screw mounting*

① *ZARF*
② *With stepped shaft locating washer extended on one side ZARF..-L*

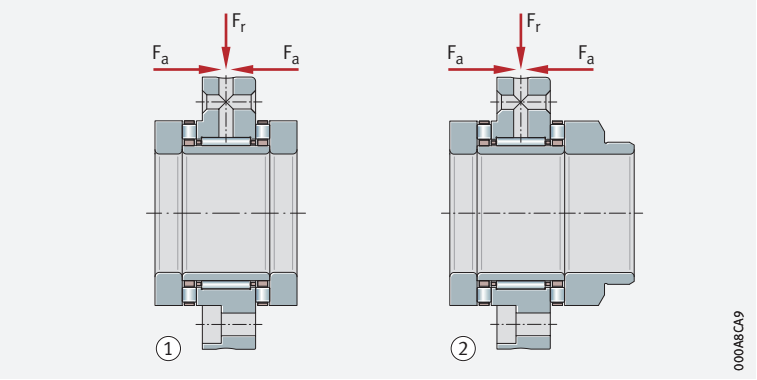

7 *Needle roller/axial cylindrical roller bearings, not for screw mounting*

① *ZARN*
② *With stepped shaft locating washer extended on one side ZARN..-L*

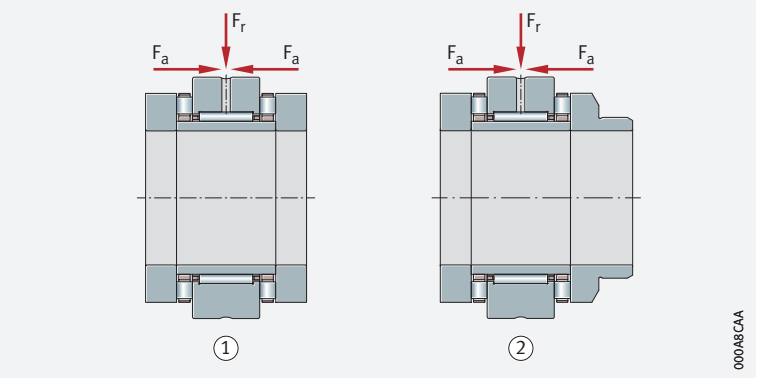

Features

Needle roller/axial cylindrical roller bearings comprise an outer ring with radial and axial raceways, shaft locating washers, an inner ring, a radial needle roller and cage assembly and axial cylindrical roller and cage assemblies. The bearings are available with or without fixing holes.

Capable of supporting radial and axial loads

In addition to radial forces, the bearings can also support axial forces from both directions and tilting moments.

Preload and internal clearance

The outer ring, inner ring and axial cages are matched to each other such that the bearing is axially clearance-free after preloading by means of an INA precision locknut. The radial internal clearance corresponds to Group 2 in accordance with ISO 5753-1 (DIN 620-4).

Bearings for screw mounting

Screw mounting of the outer ring: cover and matching work can be dispensed with

Needle roller/axial cylindrical roller bearings ZARF(-L) have holes in the outer ring. These are used for screw mounting directly on the adjacent construction or in a radial locating bore. Due to screw mounting of the outer ring, the cover that would otherwise be required and the matching work can therefore be dispensed with. The bearings are preloaded against the shaft shoulder by means of a locknut AM or ZM(A).

With seal carrier assembly

In the interests of a simpler design, a seal carrier assembly DRS is recommended. The seal carrier assembly is centred on the outer ring and seals the bearing against external influences.

Bearings not for screw mounting

Mounting in the housing bore

Bearings ZARN(-L) are mounted in the housing bore and the outer ring is located using a cover. They are preloaded against the shaft shoulder by means of a locknut AM or ZM(A).

With stepped shaft locating washer

ZARN/F..-L has a stepped shaft locating washer extended on one side. These series are used in preference where the shaft locating washer is not adequately supported axially by the shaft shoulder or the bearing unit cannot be sealed on the outside surface of the normal shaft locating washer due to space conditions in the adjacent construction.

Heavy series

ZARN/F(-L) is also available in a heavy series. This series has a larger cross-section for the same shaft diameter and therefore higher basic load ratings.

Temperature range

Limiting values

The operating temperature of the bearings is limited by:

- the dimensional stability of the bearing rings and rolling elements
- the lubricant
- the seals



Possible operating temperatures of needle roller/axial cylindrical roller bearings ➤ *1253* | ▦ *3*.

▦ *3*
Permissible temperature range

Operating temperature	Needle roller/axial cylindrical roller bearings	
	from	to
	–30 °C	+120 °C

Suffixes

For a description of the suffixes used in this chapter ➤ *1253* | ▦ *4* and ***medias*** interchange *https://www.schaeffler.de/std/1D52*.

▦ *4*
Suffixes and corresponding descriptions

Suffix	Description of suffix	
L	Stepped shaft locating washer extended on one side	Standard
TVP	Axial bearing cages made from glass fibre reinforced polyamide PA66	

2.4 Accessories

Seal carrier assemblies

✎ *Complete sealing sets*

Seal carrier assemblies DRS are complete sealing sets ➤*1254*|🗀*8* that are screw mounted on the outer ring of needle roller/axial cylindrical roller bearings ZARF(-L). They are precisely centred in this position and seal the bearings against external influences ➤*1254*|🗀*9*.

🗀***8***
Seal carrier assembly DRS

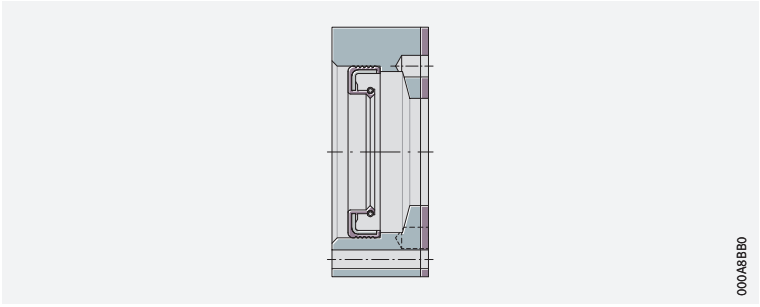

✎ *Components of DRS*

The sealing elements are supplied as a complete set of individual parts and comprise:

- a seal flange
- a rotary shaft seal to DIN 3760, with an elastomer part made from NBR
- a gasket
- hexagonal socket head screws for fixing the carrier to the central washer of the bearing

🗀***9***
Needle roller/axial cylindrical roller bearing ZARF..-L with seal carrier assembly

① *Seal carrier assembly DRS*
② *Precision locknut ZM or ZMA*
③ *Rotary shaft seal to DIN 3760*

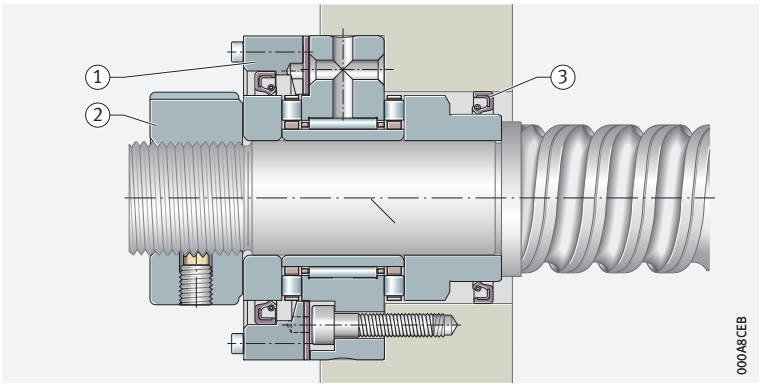

Precision locknuts

Precision locknuts are used in the axial preloading of bearings for screw drives

Precision locknuts are used to achieve a defined axial preload in bearings for screw drives. They are also used where high axial forces must be supported and high axial runout accuracy and rigidity are required.

10
Precision locknuts

① *For axial clamping AM*
② *For radial clamping ZM or ZMA*

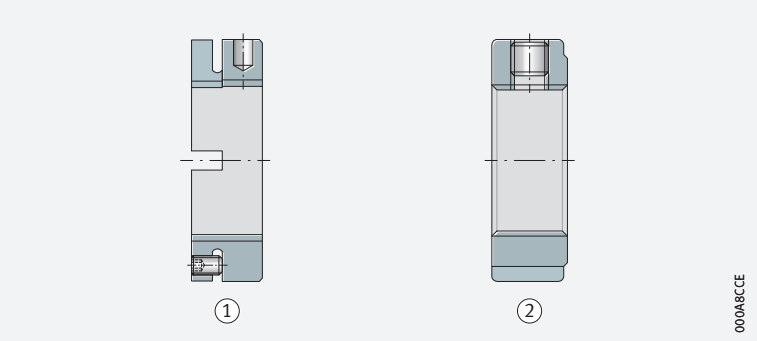

Sockets

For simple tightening and loosening of precision locknuts ZM on shafts, the sockets LOCKNUT-SOCKET-KM ➤ *1255* | *11* are suitable. In combination with the socket AMS, this socket is also suitable for precision locknuts AM. They require less space on the circumference of the locknut than hook wrenches and allow the use of torque wrenches.

11
FAG sockets for precision locknuts ZM and sockets AMS

① *Socket AMS*
② *Socket LOCKNUT-SOCKET-KM*

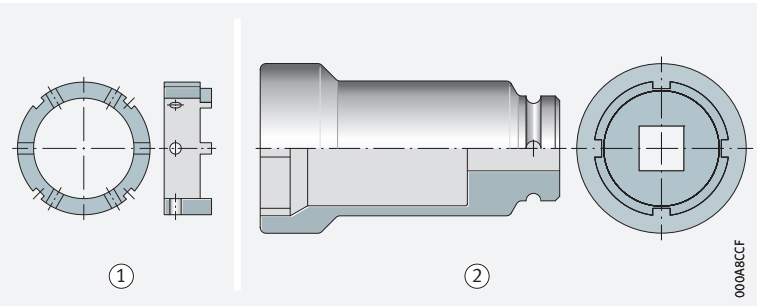

Secure sockets using a locking pin and rubber washer

For increased reliability, FAG sockets should be secured using a locking pin and rubber washer. They therefore have a hole for the locking pin and a groove for the rubber washer. The locking pin and rubber washer are included in the scope of delivery.

Axial angular contact ball bearings

With fixing holes

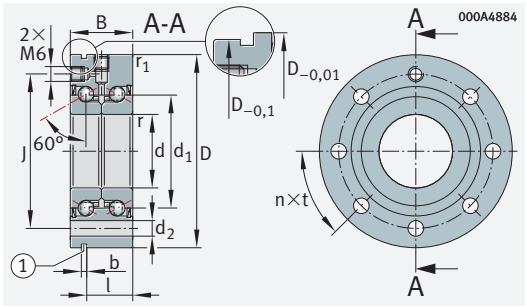

ZKLF..-2RS, ZKLF..-2Z (d ≦ 50 mm)

d = 12 – 20 mm

Main dimensions			Dimensions			Designation
d	D	B	d_1	r min.	r_1 min.	
12 0/–0,005	55 0/–0,010	25 0/–0,25	25	0,3	0,6	**ZKLF1255-2RS-XL**
0/–0,005	55 0/–0,010	25 0/–0,25	25	0,3	0,6	**ZKLF1255-2Z-XL**
15 0/–0,005	60 0/–0,010	25 0/–0,25	28	0,3	0,6	**ZKLF1560-2RS-XL**
0/–0,005	60 0/–0,010	25 0/–0,25	28	0,3	0,6	**ZKLF1560-2Z-XL**
17 0/–0,005	62 0/–0,010	25 0/–0,25	30	0,3	0,6	**ZKLF1762-2RS-XL**
0/–0,005	62 0/–0,010	25 0/–0,25	30	0,3	0,6	**ZKLF1762-2Z-XL**
20 0/–0,005	68 0/–0,010	28 0/–0,25	34,5	0,3	0,6	**ZKLF2068-2RS-XL**
0/–0,005	68 0/–0,010	28 0/–0,25	34,5	0,3	0,6	**ZKLF2068-2Z-XL**

	Basic load ratings axial		Fatigue limit load	Limiting speed	Thermally safe operating speed	Bearing frictional torque	Mass	Designation
d	dyn. C_a N	stat. C_{0a} N	C_{ua} N	n_G grease min^{-1}	n_ϑ min^{-1}	M_R Nm	m ≈ kg	
12	18 600	24 700	1 500	9 200	3 800	0,16	0,37	**ZKLF1255-2RS-XL**
	18 600	24 700	1 500	12 000	7 600	0,08	0,37	**ZKLF1255-2Z-XL**
15	19 600	28 000	1 700	8 200	3 500	0,2	0,43	**ZKLF1560-2RS-XL**
	19 600	28 000	1 700	10 800	7 000	0,1	0,43	**ZKLF1560-2Z-XL**
17	20 700	31 000	1 890	7 600	3 300	0,24	0,45	**ZKLF1762-2RS-XL**
	20 700	31 000	1 890	10 100	6 600	0,12	0,45	**ZKLF1762-2Z-XL**
20	28 500	47 000	2 850	6 600	3 000	0,3	0,61	**ZKLF2068-2RS-XL**
	28 500	47 000	2 850	8 700	5 400	0,15	0,61	**ZKLF2068-2Z-XL**

medias *https://www.schaeffler.de/std/1F9A*

① Extraction slot. ② Adjacent construction, bearing screw mounted on flat surface.
③ Adjacent construction, bearing screw mounted in bore. ④ Only valid in assembled condition.

1) Screws 10.9 not included in scope of delivery. Tightening torque according to manufacturer's data. Number of holes in adjacent construction corresponds to n_a.

2) Based on rotating inner ring.

3) The recommended INA precision locknuts are not included in the scope of delivery and must be ordered separately.

4) The required axial locknut force must be observed when using other locknuts.

5) Only valid in conjunction with INA precision locknuts. Observe the guidelines on locating/locating bearing arrangements TPI 123.

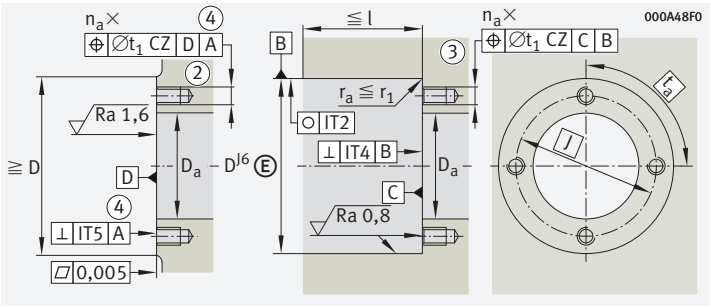

Housing design

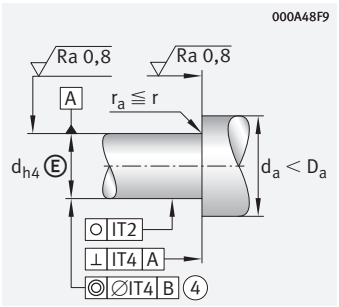

Shaft design (threaded spindle)

Dimensions					Pitch		Mounting dimensions			Fixing screws[1] DIN EN ISO 4762		
d	J	d_2	b	l	n	t °	D_a max.	d_a min.	t_1	Size	n_a	t_a °
12	42	6,8	3	17	3	120	33	16	0,1	M6	3	120
	42	6,8	3	17	3	120	33	16	0,1	M6	3	120
15	46	6,8	3	17	3	120	35	20	0,1	M6	3	120
	46	6,8	3	17	3	120	35	20	0,1	M6	3	120
17	48	6,8	3	17	6	60	37	23	0,1	M6	3	120
	48	6,8	3	17	6	60	37	23	0,1	M6	3	120
20	53	6,8	3	19	8	45	43	25	0,1	M6	4	90
	53	6,8	3	19	8	45	43	25	0,1	M6	4	90

	Rigidity axial	Tilting rigidity	Mass moment of inertia[2]	Axial runout[2]	Recommended INA precision locknuts[3]			Required locknut force[4]
					for radial clamping	for axial clamping	Tightening torque[5]	axial
d	c_{aL}	c_{kL}	M_m				M_A	
	N/µm	Nm/mrad	kg · cm²	µm			Nm	N
12	375	50	0,068	2	ZM12	–	8	5 307
	375	50	0,068	2	ZM12	–	8	5 307
15	400	65	0,102	2	ZM15	AM15	10	5 484
	400	65	0,102	2	ZM15	AM15	10	5 484
17	450	80	0,132	2	ZM17	AM17	15	7 514
	450	80	0,132	2	ZM17	AM17	15	7 514
20	650	140	0,273	2	ZM20	AM20	18	8 258
	650	140	0,273	2	ZM20	AM20	18	8 258

Axial angular contact ball bearings

With fixing holes

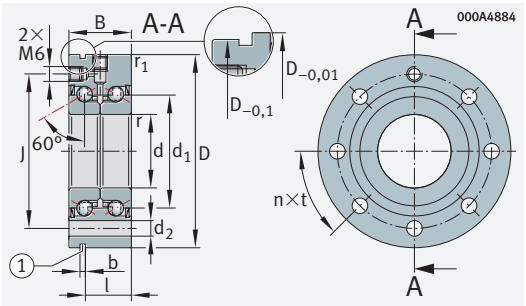

ZKLF..-2RS, ZKLF..-2Z (d ≦ 50 mm)

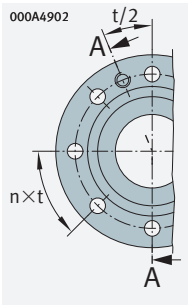

ZKLF30100

d = 25 – 35 mm

Main dimensions				Dimensions			Designation
d		D	B	d_1	r min.	r_1 min.	
25	0/−0,005	75 0/−0,010	28 0/−0,25	40,5	0,3	0,6	**ZKLF2575-2RS-XL**
	0/−0,005	75 0/−0,010	28 0/−0,25	40,5	0,3	0,6	**ZKLF2575-2Z-XL**
30	0/−0,005	80 0/−0,010	28 0/−0,25	45,5	0,3	0,6	**ZKLF3080-2RS-XL**
	0/−0,005	80 0/−0,010	28 0/−0,25	45,5	0,3	0,6	**ZKLF3080-2Z-XL**
	0/−0,005	100 0/−0,010	38 0/−0,25	51	0,3	0,6	**ZKLF30100-2RS-XL**[2]
	0/−0,005	100 0/−0,010	38 0/−0,25	51	0,3	0,6	**ZKLF30100-2Z-XL**[2]
35	0/−0,005	90 0/−0,010	34 0/−0,25	52	0,3	0,6	**ZKLF3590-2RS-XL**
	0/−0,005	90 0/−0,010	34 0/−0,25	52	0,3	0,6	**ZKLF3590-2Z-XL**

	Basic load ratings axial		Fatigue limit load	Limiting speed	Thermally safe operating speed	Bearing frictional torque	Mass	Designation
d	dyn. C_a N	stat. C_{0a} N	C_{ua} N	n_G grease min^{-1}	n_ϑ min^{-1}	M_R Nm	m ≈ kg	
25	30 500	55 000	3 350	5 700	2 600	0,4	0,72	**ZKLF2575-2RS-XL**
	30 500	55 000	3 350	7 500	4 700	0,2	0,72	**ZKLF2575-2Z-XL**
30	32 000	64 000	3 850	5 000	2 200	0,5	0,78	**ZKLF3080-2RS-XL**
	32 000	64 000	3 850	6 700	4 300	0,25	0,78	**ZKLF3080-2Z-XL**
	65 000	108 000	6 500	4 500	2 100	0,8	1,63	**ZKLF30100-2RS-XL**[2]
	65 000	108 000	6 500	5 600	4 000	0,4	1,63	**ZKLF30100-2Z-XL**[2]
35	45 000	89 000	5 400	4 400	2 000	0,6	1,13	**ZKLF3590-2RS-XL**
	45 000	89 000	5 400	5 800	3 800	0,3	1,13	**ZKLF3590-2Z-XL**

medias *https://www.schaeffler.de/std/1F9A*

① Extraction slot. ② Adjacent construction, bearing screw mounted on flat surface.
③ Adjacent construction, bearing screw mounted in bore. ④ Only valid in assembled condition.

1) Screws 10.9 not included in scope of delivery. Tightening torque according to manufacturer's data. Number of holes in adjacent construction corresponds to n_a.

2) Heavy series.

3) Based on rotating inner ring.

4) The recommended INA precision locknuts are not included in the scope of delivery and must be ordered separately.

5) The required axial locknut force must be observed when using other locknuts.

6) Only valid in conjunction with INA precision locknuts. Observe the guidelines on locating/locating bearing arrangements TPI 123.

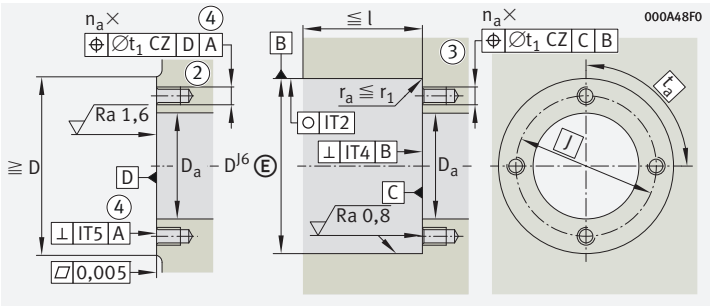

Housing design

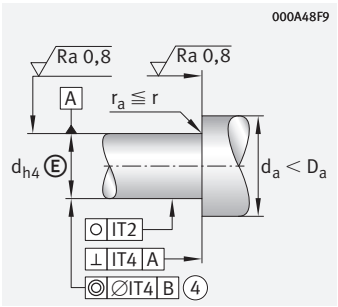

Shaft design (threaded spindle)

Dimensions					Pitch		Mounting dimensions			Fixing screws[1] DIN EN ISO 4762		
d	J	d_2	b	l	n	t °	D_a max.	d_a min.	t_1	Size	n_a	t_a °
25	58	6,8	3	19	8	45	48	32	0,1	M6	4	90
	58	6,8	3	19	8	45	48	32	0,1	M6	4	90
30	63	6,8	3	19	12	30	53	40	0,1	M6	6	60
	63	6,8	3	19	12	30	53	40	0,1	M6	6	60
	80	8,8	3	30	8	45	64	47	0,2	M8	8	45
	80	8,8	3	30	8	45	64	47	0,2	M8	8	45
35	75	8,8	3	25	8	45	62	45	0,2	M8	4	90
	75	8,8	3	25	8	45	62	45	0,2	M8	4	90

	Rigidity axial	Tilting rigidity	Mass moment of inertia[3]	Axial runout[3]	Recommended INA precision locknuts[4]			Required locknut force[5]
					for radial clamping	for axial clamping	Tightening torque[6]	axial
d	c_{aL}	c_{kL}	M_m				M_A	
	N/µm	Nm/mrad	kg · cm²	µm			Nm	N
25	750	200	0,486	2	ZM25	AM25	25	9 123
	750	200	0,486	2	ZM25	AM25	25	9 123
30	850	300	0,73	2,5	ZM30	AM30	32	9 947
	850	300	0,73	2,5	ZM30	AM30	32	9 947
	950	400	1,91	2,5	ZMA30/52	AM30	65	19 509
	950	400	1,91	2,5	ZMA30/52	AM30	65	19 509
35	900	400	1,51	2,5	ZM35	AM35/58	40	10 770
	900	400	1,51	2,5	ZM35	AM35/58	40	10 770

Axial angular contact ball bearings

With fixing holes

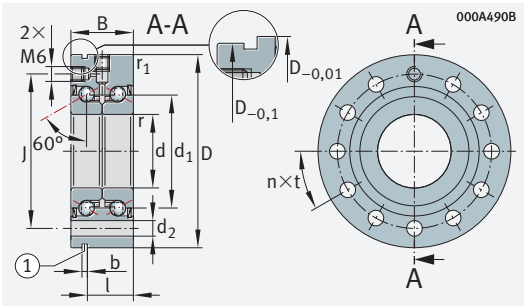

ZKLF..-2RS, ZKLF..-2Z (d ≦ 50 mm)

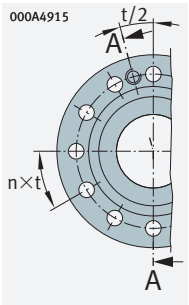

ZKLF40115
ZKLF50140

d = 40 – 50 mm

Main dimensions			Dimensions			Designation
d	D	B	d_1	r min.	r_1 min.	
40 0/–0,005	100 0/–0,010	34 0/–0,25	58	0,3	0,6	**ZKLF40100-2RS-XL**
0/–0,005	100 0/–0,010	34 0/–0,25	58	0,3	0,6	**ZKLF40100-2Z-XL**
0/–0,005	115 0/–0,010	46 0/–0,25	65	0,6	0,6	**ZKLF40115-2RS-XL**[2]
0/–0,005	115 0/–0,010	46 0/–0,25	65	0,6	0,6	**ZKLF40115-2Z-XL**[2]
50 0/–0,005	115 0/–0,010	34 0/–0,25	72	0,3	0,6	**ZKLF50115-2RS-XL**
0/–0,005	115 0/–0,010	34 0/–0,25	72	0,3	0,6	**ZKLF50115-2Z-XL**
0/–0,005	140 0/–0,010	54 0/–0,25	80	0,6	0,6	**ZKLF50140-2RS-XL**[2]
0/–0,005	140 0/–0,010	54 0/–0,25	80	0,6	0,6	**ZKLF50140-2Z-XL**[2]

	Basic load ratings axial		Fatigue limit load	Limiting speed	Thermally safe operating speed	Bearing frictional torque	Mass	Designation
d	dyn. C_a N	stat. C_{0a} N	C_{ua} N	n_G grease min^{-1}	n_ϑ min^{-1}	M_R Nm	m ≈ kg	
40	47 500	101 000	6 100	4 000	1 800	0,7	1,46	**ZKLF40100-2RS-XL**
	47 500	101 000	6 100	5 200	3 300	0,35	1,46	**ZKLF40100-2Z-XL**
	79 000	149 000	9 100	3 500	1 600	1,3	2,2	**ZKLF40115-2RS-XL**[2]
	79 000	149 000	9 100	4 400	3 100	0,65	2,2	**ZKLF40115-2Z-XL**[2]
50	51 000	126 000	7 700	3 200	1 500	0,9	1,86	**ZKLF50115-2RS-XL**
	51 000	126 000	7 700	4 200	3 000	0,45	1,86	**ZKLF50115-2Z-XL**
	125 000	250 000	15 200	2 900	1 200	2,6	4,7	**ZKLF50140-2RS-XL**[2]
	125 000	250 000	15 200	3 500	2 500	1,3	4,7	**ZKLF50140-2Z-XL**[2]

medias *https://www.schaeffler.de/std/1F9A*

① Extraction slot. ② Adjacent construction, bearing screw mounted on flat surface.
③ Adjacent construction, bearing screw mounted in bore. ④ Only valid in assembled condition.

1) Screws 10.9 not included in scope of delivery. Tightening torque according to manufacturer's data. Number of holes in adjacent construction corresponds to n_a.

2) Heavy series.

3) Based on rotating inner ring.

4) The recommended INA precision locknuts are not included in the scope of delivery and must be ordered separately.

5) The required axial locknut force must be observed when using other locknuts.

6) Only valid in conjunction with INA precision locknuts. Observe the guidelines on locating/locating bearing arrangements TPI 123.

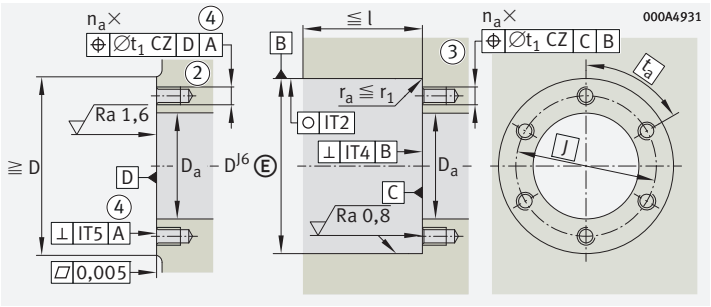

Housing design

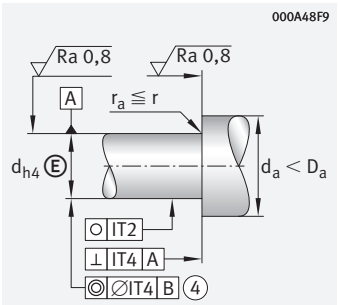

Shaft design (threaded spindle)

Dimensions					Pitch		Mounting dimensions			Fixing screws[1] DIN EN ISO 4762		
d	J	d_2	b	l	n	t °	D_a max.	d_a min.	t_1	Size	n_a	t_a °
40	80	8,8	3	25	8	45	67	50	0,2	M8	4	90
	80	8,8	3	25	8	45	67	50	0,2	M8	4	90
	94	8,8	3	36	12	30	80	56	0,2	M8	12	30
	94	8,8	3	36	12	30	80	56	0,2	M8	12	30
50	94	8,8	3	25	12	30	82	63	0,2	M8	6	60
	94	8,8	3	25	12	30	82	63	0,2	M8	6	60
	113	11	3	45	12	30	98	63	0,2	M10	12	30
	113	11	3	45	12	30	98	63	0,2	M10	12	30

	Rigidity axial	Tilting rigidity	Mass moment of inertia[3]	Axial runout[3]	Recommended INA precision locknuts[4]			Required locknut force[5]
					for radial clamping	for axial clamping	Tightening torque[6]	axial
d	c_{aL}	c_{kL}	M_m				M_A	
	N/µm	Nm/mrad	kg · cm²	µm			Nm	N
40	1 000	550	2,26	2,5	ZM40	AM40	55	13 412
	1 000	550	2,26	2,5	ZM40	AM40	55	13 412
	1 200	750	5,5	2,5	ZMA40/62	AM40	110	25 185
	1 200	750	5,5	2,5	ZMA40/62	AM40	110	25 815
50	1 250	1 000	5,24	2,5	ZM50	AM50	85	16 280
	1 250	1 000	5,24	2,5	ZM50	AM50	85	16 280
	1 400	1 500	15,2	2,5	ZMA50/75	AM50	150	28 451
	1 400	1 500	15,2	2,5	ZMA50/75	AM50	150	28 451

Axial angular contact ball bearings

With fixing holes

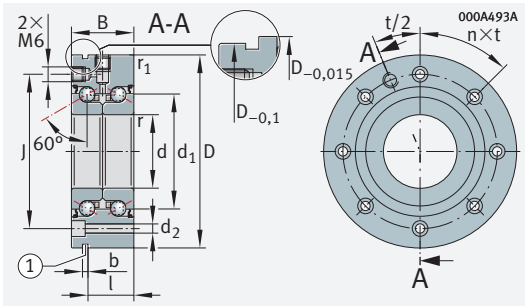

ZKLF..-2Z (60 mm ≦ d ≦ 100 mm)

d = 60 – 100 mm

Main dimensions				Dimensions			Designation
d		D	B	d_1	r min.	r_1 min.	
60	0/–0,008	145 0/–0,015	45 0/–0,25	85	0,6	0,6	**ZKLF60145-2Z-XL**
70	0/–0,008	155 0/–0,015	45 0/–0,25	95	0,6	0,6	**ZKLF70155-2Z-XL**
80	0/–0,008	165 0/–0,015	45 0/–0,25	105	0,6	0,6	**ZKLF80165-2Z-XL**
90	0/–0,008	190 0/–0,015	55 0/–0,25	120	0,6	0,6	**ZKLF90190-2Z-XL**
100	0/–0,008	200 0/–0,015	55 0/–0,25	132	0,6	0,6	**ZKLF100200-2Z-XL**
	0/–0,008	230 0/–0,015	85 0/–0,25	146	0,6	0,6	**ZKLF100230-2Z**

	Basic load ratings axial		Fatigue limit load	Limiting speed	Thermally safe operating speed	Bearing frictional torque	Mass	Designation
d	dyn. C_a N	stat. C_{0a} N	C_{ua} N	n_G grease min^{-1}	n_ϑ min^{-1}	M_R Nm	m ≈ kg	
60	93 000	214 000	13 000	4 000	3 000	1	4,3	**ZKLF60145-2Z-XL**
70	97 000	241 000	14 600	3 800	2 800	1,2	4,9	**ZKLF70155-2Z-XL**
80	100 000	265 000	15 800	3 600	2 700	1,4	5,3	**ZKLF80165-2Z-XL**
90	149 000	395 000	21 900	3 500	2 300	2,3	8,7	**ZKLF90190-2Z-XL**
100	154 000	435 000	23 000	3 300	2 150	2,6	9,3	**ZKLF100200-2Z-XL**
	295 000	790 000	30 000	2 900	2 000	3	17,6	**ZKLF100230-2Z**

medias *https://www.schaeffler.de/std/1F9A*

① Extraction slot. ② Adjacent construction, bearing screw mounted on flat surface.
③ Adjacent construction, bearing screw mounted in bore. ④ Only valid in assembled condition.

1) Screws 10.9 not included in scope of delivery. Tightening torque according to manufacturer's data. Number of holes in adjacent construction corresponds to n_a.

2) Based on rotating inner ring.

3) The recommended INA precision locknuts are not included in the scope of delivery and must be ordered separately.

4) The required axial locknut force must be observed when using other locknuts.

5) Only valid in conjunction with INA precision locknuts. Observe the guidelines on locating/locating bearing arrangements TPI 123.

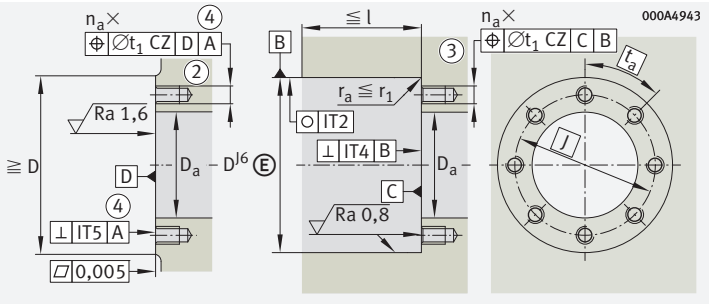

Housing design

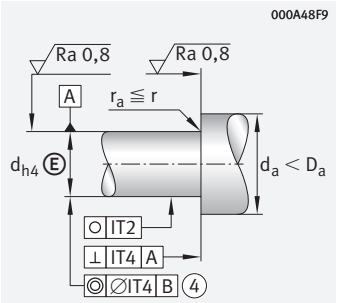

Shaft design (threaded spindle)

Dimensions					Pitch		Mounting dimensions			Fixing screws[1] DIN EN ISO 4762		
d	J	d_2	b	l	n	t °	D_a max.	d_a min.	t_1	Size	n_a	t_a °
60	120	8,8	3	35	8	45	100	82	0,2	M8	8	45
70	130	8,8	3	35	8	45	110	92	0,2	M8	8	45
80	140	8,8	3	35	8	45	120	102	0,2	M8	8	45
90	165	11	3	45	8	45	138	116	0,2	M10	8	45
100	175	11	3	45	8	45	150	128	0,2	M10	8	45
	200	14	3	73	12	30	175	130	0,4	M12	12	30

	Rigidity axial	Tilting rigidity	Mass moment of inertia[2]	Axial runout[2]	Recommended INA precision locknuts[3]			Required locknut force[4]
					for radial clamping	for axial clamping	Tightening torque[5]	axial
d	c_{aL}	c_{kL}	M_m				M_A	
	N/µm	Nm/mrad	kg · cm²	µm			Nm	N
60	1 300	1 650	13,7	3	ZMA60/98	AM60	100	16 700
70	1 450	2 250	19,8	3	ZMA70/110	AM70	130	19 031
80	1 600	3 000	27,6	3	ZMA80/120	AM80	160	20 604
90	1 700	4 400	59,9	3	ZMA90/130	AM90	200	22 731
100	1 900	5 800	85,3	3	ZMA100/140	AM100	250	25 624
	2 450	8 200	185	3	–	AM100	500	52 000

Axial angular contact ball bearings

With fixing holes
Less stringent tolerances

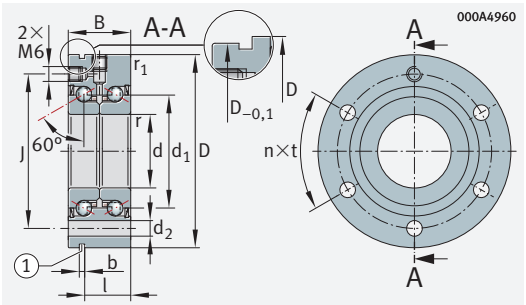

ZKLF..-2RS-PE

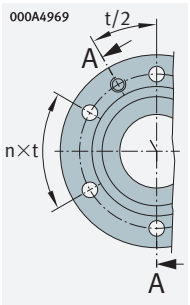

ZKLF12, ZKLF15

d = 12 – 50 mm

Main dimensions			Dimensions			Designation
d	D	B	d_1	r min.	r_1 min.	
12 0/−0,010	55 0/−0,013	25 0/−0,25	25	0,3	0,6	**ZKLF1255-2RS-PE**
15 0/−0,010	60 0/−0,013	25 0/−0,25	28	0,3	0,6	**ZKLF1560-2RS-PE**
17 0/−0,010	62 0/−0,013	25 0/−0,25	30	0,3	0,6	**ZKLF1762-2RS-PE**
20 0/−0,010	68 0/−0,013	28 0/−0,25	34,5	0,3	0,6	**ZKLF2068-2RS-PE**
25 0/−0,010	75 0/−0,013	28 0/−0,25	40,5	0,3	0,6	**ZKLF2575-2RS-PE**
30 0/−0,010	80 0/−0,013	28 0/−0,25	45,5	0,3	0,6	**ZKLF3080-2RS-PE**
35 0/−0,010	90 0/−0,015	34 0/−0,25	52	0,3	0,6	**ZKLF3590-2RS-PE**
40 0/−0,010	100 0/−0,015	34 0/−0,25	58	0,3	0,6	**ZKLF40100-2RS-PE**
50 0/−0,010	115 0/−0,015	34 0/−0,25	72	0,3	0,6	**ZKLF50115-2RS-PE**

	Basic load ratings axial		Fatigue limit load	Limiting speed	Thermally safe operating speed	Bearing frictional torque	Mass	Designation
d	dyn. C_a N	stat. C_{0a} N	C_{ua} N	n_G grease min^{-1}	n_ϑ min^{-1}	M_R Nm	m ≈ kg	
12	16 900	24 700	1 130	9 200	3 800	0,16	0,37	**ZKLF1255-2RS-PE**
15	17 900	28 000	1 280	8 200	3 500	0,2	0,43	**ZKLF1560-2RS-PE**
17	18 800	31 000	1 420	7 600	3 300	0,24	0,45	**ZKLF1762-2RS-PE**
20	26 000	47 000	2 130	6 600	3 000	0,3	0,61	**ZKLF2068-2RS-PE**
25	27 500	55 000	2 500	5 700	2 600	0,4	0,72	**ZKLF2575-2RS-PE**
30	29 000	64 000	2 900	5 000	2 200	0,5	0,78	**ZKLF3080-2RS-PE**
35	41 000	89 000	4 050	4 400	2 000	0,6	1,13	**ZKLF3590-2RS-PE**
40	43 000	101 000	4 600	4 000	1 800	0,7	1,46	**ZKLF40100-2RS-PE**
50	46 500	126 000	5 800	3 200	1 500	0,9	1,86	**ZKLF50115-2RS-PE**

medias *https://www.schaeffler.de/std/1F9A*

① Extraction slot. ② Adjacent construction, bearing screw mounted on flat surface.
③ Adjacent construction, bearing screw mounted in bore. ④ Only valid in assembled condition.

1) Screws 10.9 not included in scope of delivery. Tightening torque according to manufacturer's data. Number of holes in adjacent construction corresponds to n_a.

2) Based on rotating inner ring.

3) The recommended INA precision locknuts are not included in the scope of delivery and must be ordered separately.

4) The required axial locknut force must be observed when using other locknuts.

5) Only valid in conjunction with INA precision locknuts. Observe the guidelines on locating/locating bearing arrangements TPI 123.

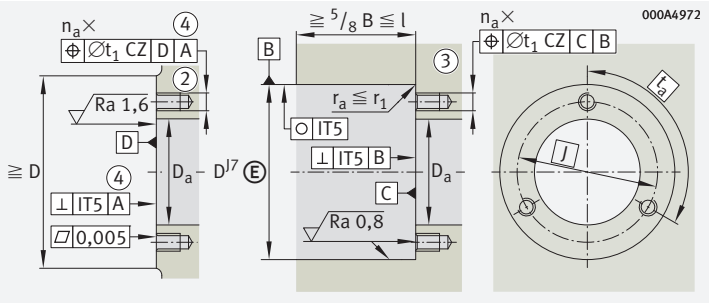

Housing design

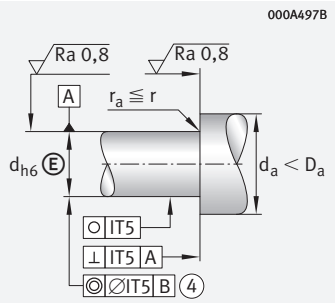

Shaft design (threaded spindle)

Dimensions					Pitch		Mounting dimensions			Fixing screws[1] DIN EN ISO 4762		
d	J	d_2	b	l	n	t °	D_a max.	d_a min.	t_1	Size	n_a	t_a °
12	42	6,8	3	17	3	120	33	16	0,1	M6	3	120
15	46	6,8	3	17	3	120	35	20	0,1	M6	3	120
17	48	6,8	3	17	6	60	37	23	0,1	M6	3	120
20	53	6,8	3	19	8	45	43	25	0,1	M6	4	90
25	58	6,8	3	19	8	45	48	32	0,1	M6	4	90
30	63	6,8	3	19	12	30	53	40	0,1	M6	6	60
35	75	8,8	3	25	8	45	62	45	0,2	M8	4	90
40	80	8,8	3	25	8	45	67	50	0,2	M8	4	90
50	94	8,8	3	25	12	30	82	63	0,2	M8	6	60

	Rigidity axial	Tilting rigidity	Mass moment of inertia[2]	Axial runout[2]	Recommended INA precision locknuts[3]			Required locknut force[4]
					for radial clamping	for axial clamping	Tightening torque[5]	axial
d	c_{aL}	c_{kL}	M_m				M_A	
	N/µm	Nm/mrad	kg · cm²	µm			Nm	N
12	375	50	0,068	5	ZM12	–	8	5 307
15	400	65	0,102	5	ZM15	AM15	10	5 484
17	450	80	0,132	5	ZM17	AM17	15	7 514
20	650	140	0,273	5	ZM20	AM20	18	8 258
25	750	200	0,486	5	ZM25	AM25	25	9 123
30	850	300	0,73	5	ZM30	AM30	32	9 947
35	900	400	1,51	5	ZM35	AM35/58	40	10 770
40	1 000	550	2,26	5	ZM40	AM40	55	13 412
50	1 250	1 000	5,24	5	ZM50	AM50	85	16 280

Axial angular contact ball bearings

With fixing holes
Matched pair

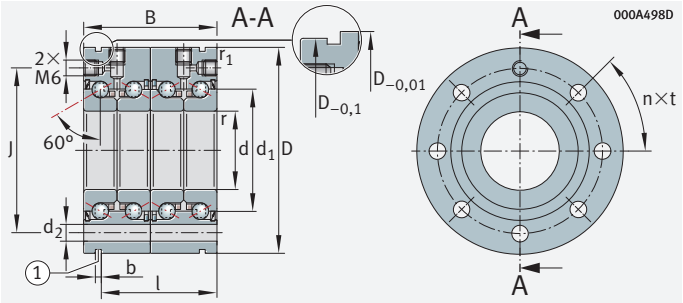

ZKLF..-2RS-2AP

d = 17 – 50 mm

Main dimensions			Dimensions			Designation
d	D	B	d_1	r min.	r_1 min.	
17 0/–0,005	62 0/–0,010	50 0/–0,25	30	0,3	0,6	**ZKLF1762-2RS-2AP-XL**
20 0/–0,005	68 0/–0,010	56 0/–0,25	34,5	0,3	0,6	**ZKLF2068-2RS-2AP-XL**
25 0/–0,005	75 0/–0,010	56 0/–0,25	40,5	0,3	0,6	**ZKLF2575-2RS-2AP-XL**
30 0/–0,005	80 0/–0,010	56 0/–0,25	45,5	0,3	0,6	**ZKLF3080-2RS-2AP-XL**
35 0/–0,005	90 0/–0,010	68 0/–0,25	52	0,3	0,6	**ZKLF3590-2RS-2AP-XL**
40 0/–0,005	100 0/–0,010	68 0/–0,25	58	0,3	0,6	**ZKLF40100-2RS-2AP-XL**
50 0/–0,005	115 0/–0,010	68 0/–0,25	72	0,3	0,6	**ZKLF50115-2RS-2AP-XL**

	Basic load ratings axial		Fatigue limit load	Limiting speed	Thermally safe operating speed	Bearing frictional torque	Mass	Designation
d	dyn. C_a N	stat. C_{0a} N	C_{ua} N	n_G grease min^{-1}	n_ϑ min^{-1}	M_R Nm	m ≈ kg	
17	33 500	62 000	3 800	7 600	3 300	0,36	0,9	**ZKLF1762-2RS-2AP-XL**
20	46 000	94 000	5 700	6 600	3 000	0,45	1,22	**ZKLF2068-2RS-2AP-XL**
25	49 000	111 000	6 700	5 700	2 600	0,6	1,44	**ZKLF2575-2RS-2AP-XL**
30	52 000	127 000	7 700	5 000	2 200	0,75	1,56	**ZKLF3080-2RS-2AP-XL**
35	73 000	177 000	10 800	4 400	2 000	0,9	2,26	**ZKLF3590-2RS-2AP-XL**
40	77 000	202 000	12 300	4 000	1 800	1,05	2,92	**ZKLF40100-2RS-2AP-XL**
50	83 000	250 000	15 300	3 200	1 500	1,35	3,72	**ZKLF50115-2RS-2AP-XL**

medias *https://www.schaeffler.de/std/1F9A*

① Extraction slot. ② Adjacent construction, bearing screw mounted on flat surface.
③ Adjacent construction, bearing screw mounted in bore. ④ Only valid in assembled condition.

1) Screws 10.9 not included in scope of delivery. Tightening torque according to manufacturer's data. Number of holes in adjacent construction corresponds to n_a.

2) Based on rotating inner ring.

3) The recommended INA precision locknuts are not included in the scope of delivery and must be ordered separately.

4) The required axial locknut force must be observed when using other locknuts.

5) Only valid in conjunction with INA precision locknuts. Observe the guidelines on locating/locating bearing arrangements TPI 123.

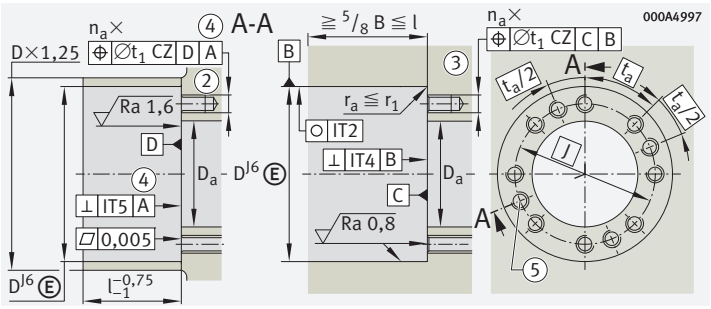

Housing design

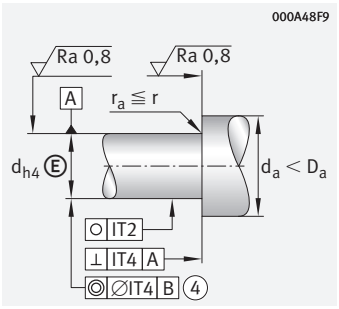

Shaft design (threaded spindle)

Dimensions					Pitch		Mounting dimensions			Fixing screws[1] DIN EN ISO 4762		
d	J	d_2	b	l	n	t °	D_a max.	d_a min.	t_1	Size	n_a	t_a °
17	48	6,8	3	42	6	60	37	23	0,1	M6×60	6	60
20	53	6,8	3	47	8	45	43	25	0,1	M6×70	8	45
25	58	6,8	3	47	8	45	48	32	0,1	M6×70	8	45
30	63	6,8	3	47	12	30	53	40	0,1	M6×70	12	30
35	75	8,8	3	59	8	45	62	45	0,2	M8×80	8	45
40	80	8,8	3	59	8	45	67	50	0,2	M8×80	8	45
50	94	8,8	3	59	12	30	82	63	0,2	M8×80	12	30

	Rigidity axial	Tilting rigidity	Mass moment of inertia[2]	Axial runout[2]	Recommended INA precision locknuts[3]			Required locknut force[4]
					for radial clamping	for axial clamping	Tightening torque[5]	axial
d	c_{aL}	c_{kL}	M_m				M_A	
	N/µm	Nm/mrad	kg · cm²	µm			Nm	N
17	800	200	0,264	2	ZM17	AM17	15	7 514
20	1 150	320	0,564	2	ZMA20/38	AM20	18	8 258
25	1 300	450	0,972	2	ZMA25/45	AM25	25	9 123
30	1 500	620	1,46	2,5	ZMA30/52	AM30	32	9 947
35	1 600	900	3,02	2,5	ZMA35/58	AM35/58	40	10 770
40	1 750	1 200	4,52	2,5	ZMA40/62	AM40	55	13 412
50	2 200	2 250	10,48	2,5	ZMA50/75	AM50	85	16 280

Axial angular contact ball bearings

Without fixing holes

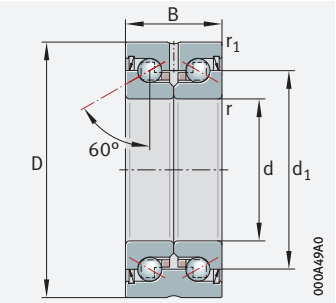

ZKLN..-2RS, ZKLN..-2Z

d = 6 – 12 mm

Main dimensions			Mass	Designation
d	D	B	m ≈ kg	
6 +0,002/–0,003	19 0/–0,01	12 0/–0,25	0,02	**ZKLN0619-2Z-XL**[5]
+0,002/–0,003	24 0/–0,01	15 0/–0,25	0,03	**ZKLN0624-2RS-XL**
+0,002/–0,003	24 0/–0,01	15 0/–0,25	0,03	**ZKLN0624-2Z-XL**
8 0 /–0,005	32 0/–0,01	20 0/–0,25	0,09	**ZKLN0832-2RS-XL**
0 /–0,005	32 0/–0,01	20 0/–0,25	0,09	**ZKLN0832-2Z-XL**
10 0 /–0,005	34 0/–0,01	20 0/–0,25	0,1	**ZKLN1034-2RS-XL**
0 /–0,005	34 0/–0,01	20 0/–0,25	0,1	**ZKLN1034-2Z-XL**
12 0 /–0,005	42 0/–0,01	25 0/–0,25	0,2	**ZKLN1242-2RS-XL**
0 /–0,005	42 0/–0,01	25 0/–0,25	0,2	**ZKLN1242-2Z-XL**

	Basic load ratings axial		Fatigue limit load	Limiting speed	Thermally safe operating speed	Bearing frictional torque	Designation
d	dyn. C_a N	stat. C_{0a} N	C_{ua} N	n_G grease min^{-1}	n_ϑ min^{-1}	M_R Nm	
6	5 400	6 100	370	22 800	14 000	0,01	**ZKLN0619-2Z-XL**[5]
	7 600	8 500	520	16 400	6 800	0,04	**ZKLN0624-2RS-XL**
	7 600	8 500	520	19 900	12 000	0,02	**ZKLN0624-2Z-XL**
8	13 800	16 300	990	12 100	5 100	0,08	**ZKLN0832-2RS-XL**
	13 800	16 300	990	15 500	9 500	0,04	**ZKLN0832-2Z-XL**
10	14 700	18 800	1 140	10 900	4 600	0,12	**ZKLN1034-2RS-XL**
	14 700	18 800	1 140	14 400	8 600	0,06	**ZKLN1034-2Z-XL**
12	18 600	24 700	1 500	9 200	3 800	0,16	**ZKLN1242-2RS-XL**
	18 600	24 700	1 500	12 000	7 600	0,08	**ZKLN1242-2Z-XL**

medias *https://www.schaeffler.de/std/1F9A*

④ Only valid in assembled condition.

1) Based on rotating inner ring.

2) The recommended INA precision locknuts are not included in the scope of delivery and must be ordered separately.

3) The required axial locknut force must be observed when using other locknuts.

4) Only valid in conjunction with INA precision locknuts.
Observe the guidelines on locating/locating bearing arrangements TPI 123.

5) No relubrication facility.

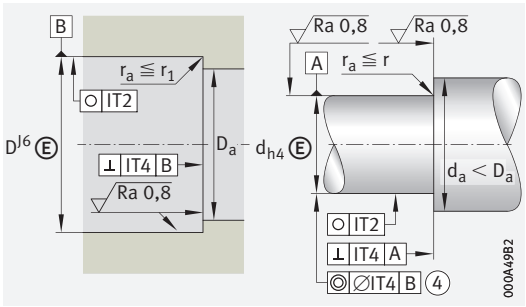

Design of housing and shaft (threaded spindle)

d	Mass moment of inertia[1] M_m kg · cm²	Axial runout[1] µm	Dimensions d_1	r min.	r_1 min.	Mounting dimensions D_a max.	d_a min.
6	0,0019	2	12	0,3	0,3	16	9
	0,0044	2	14	0,3	0,6	19	9
	0,0044	2	14	0,3	0,6	19	9
8	0,02	2	19	0,3	0,6	26	11
	0,02	2	19	0,3	0,6	26	11
10	0,029	2	21	0,3	0,6	28	14
	0,029	2	21	0,3	0,6	28	14
12	0,068	2	25	0,3	0,6	33	16
	0,068	2	25	0,3	0,6	33	16

d	Rigidity axial c_{aL} N/µm	Tilting rigidity c_{kL} Nm/mrad	Recommended INA precision locknuts[2] for radial clamping	for axial clamping	Tightening torque[4] M_A Nm	Required locknut force[3] axial N
6	150	4	ZM06	–	1	2 010
	200	8	ZM06	–	2	2 404
	200	8	ZM06	–	2	2 404
8	250	20	ZM08	–	4	3 468
	250	20	ZM08	–	4	3 468
10	325	25	ZM10	–	6	4 891
	325	25	ZM10	–	6	4 891
12	375	50	ZM12	–	8	5 307
	375	50	ZM12	–	8	5 307

Axial angular contact ball bearings

Without fixing holes

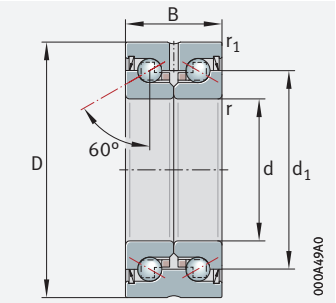

ZKLN..-2RS, ZKLN..-2Z

d = 15 – 25 mm

Main dimensions			Mass	Designation
d	D	B	m ≈ kg	
15 0/–0,005	45 0/–0,01	25 0/–0,25	0,21	**ZKLN1545-2RS-XL**
0/–0,005	45 0/–0,01	25 0/–0,25	0,21	**ZKLN1545-2Z-XL**
17 0/–0,005	47 0/–0,01	25 0/–0,25	0,22	**ZKLN1747-2RS-XL**
0/–0,005	47 0/–0,01	25 0/–0,25	0,22	**ZKLN1747-2Z-XL**
20 0/–0,005	52 0/–0,01	28 0/–0,25	0,31	**ZKLN2052-2RS-XL**
0/–0,005	52 0/–0,01	28 0/–0,25	0,31	**ZKLN2052-2Z-XL**
25 0/–0,005	57 0/–0,01	28 0/–0,25	0,34	**ZKLN2557-2RS-XL**
0/–0,005	57 0/–0,01	28 0/–0,25	0,34	**ZKLN2557-2Z-XL**

	Basic load ratings axial		Fatigue limit load	Limiting speed	Thermally safe operating speed	Bearing frictional torque	Designation
d	dyn. C_a N	stat. C_{0a} N	C_{ua} N	n_G grease min^{-1}	n_ϑ min^{-1}	M_R Nm	
15	19 600	28 000	1 700	8 200	3 500	0,2	**ZKLN1545-2RS-XL**
	19 600	28 000	1 700	10 800	7 000	0,1	**ZKLN1545-2Z-XL**
17	20 700	31 000	1 890	7 600	3 300	0,24	**ZKLN1747-2RS-XL**
	20 700	31 000	1 890	10 100	6 600	0,12	**ZKLN1747-2Z-XL**
20	28 500	47 000	2 850	6 600	3 000	0,3	**ZKLN2052-2RS-XL**
	28 500	47 000	2 850	8 700	5 400	0,15	**ZKLN2052-2Z-XL**
25	30 500	55 000	3 350	5 700	2 600	0,4	**ZKLN2557-2RS-XL**
	30 500	55 000	3 350	7 500	4 700	0,2	**ZKLN2557-2Z-XL**

medias *https://www.schaeffler.de/std/1F9A*

④ Only valid in assembled condition.

1) Based on rotating inner ring.

2) The recommended INA precision locknuts are not included in the scope of delivery and must be ordered separately.

3) The required axial locknut force must be observed when using other locknuts.

4) Only valid in conjunction with INA precision locknuts.
Observe the guidelines on locating/locating bearing arrangements TPI 123.

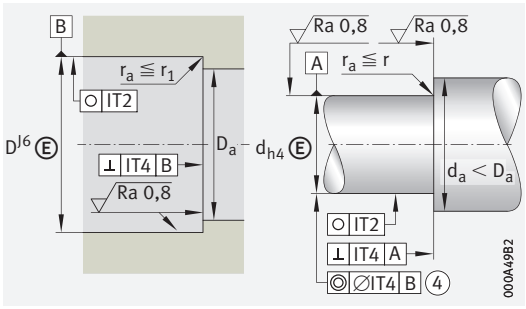

Design of housing and shaft (threaded spindle)

	Mass moment of inertia[1]	Axial runout[1]	Dimensions			Mounting dimensions	
d	M_m		d_1	r	r_1	D_a	d_a
	kg · cm²	µm		min.	min.	max.	min.
15	0,102	2	28	0,3	0,6	35	20
	0,102	2	28	0,3	0,6	35	20
17	0,132	2	30	0,3	0,6	37	23
	0,132	2	30	0,3	0,6	37	23
20	0,273	2	34,5	0,3	0,6	43	25
	0,273	2	34,5	0,3	0,6	43	25
25	0,486	2	40,5	0,3	0,6	48	32
	0,486	2	40,5	0,3	0,6	48	32

	Rigidity	Tilting rigidity	Recommended INA precision locknuts[2]			Required locknut force[3]
	axial		for radial clamping	for axial clamping	Tightening torque[4]	axial
d	c_{aL}	c_{kL}			M_A	
	N/µm	Nm/mrad			Nm	N
15	400	65	ZM15	AM15	10	5 484
	400	65	ZM15	AM15	10	5 484
17	450	80	ZM17	AM17	15	7 514
	450	80	ZM17	AM17	15	7 514
20	650	140	ZM20	AM20	18	8 258
	650	140	ZM20	AM20	18	8 258
25	750	200	ZM25	AM25	25	9 123
	750	200	ZM25	AM25	25	9 123

Axial angular contact ball bearings

Without fixing holes

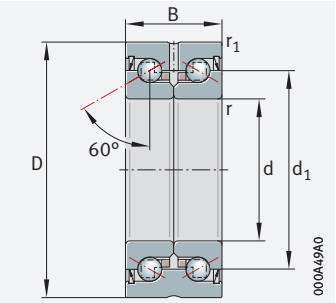

ZKLN..-2RS, ZKLN..-2Z

d = 30 – 40 mm

Main dimensions			Mass	Designation
d	D	B	m ≈ kg	
30 0/–0,005	62 0/–0,01	28 0/–0,25	0,39	**ZKLN3062-2RS-XL**
0/–0,005	62 0/–0,01	28 0/–0,25	0,39	**ZKLN3062-2Z-XL**
0/–0,005	72 0/–0,01	38 0/–0,25	0,72	**ZKLN3072-2RS-XL**[5]
0/–0,005	72 0/–0,01	38 0/–0,25	0,72	**ZKLN3072-2Z-XL**[5]
35 0/–0,005	72 0/–0,01	34 0/–0,25	0,51	**ZKLN3572-2RS-XL**
0/–0,005	72 0/–0,01	34 0/–0,25	0,51	**ZKLN3572-2Z-XL**
40 0/–0,005	75 0/–0,01	34 0/–0,25	0,61	**ZKLN4075-2RS-XL**
0/–0,005	75 0/–0,01	34 0/–0,25	0,61	**ZKLN4075-2Z-XL**
0/–0,005	90 0/–0,01	46 0/–0,25	0,95	**ZKLN4090-2RS-XL**[5]
0/–0,005	90 0/–0,01	46 0/–0,25	0,95	**ZKLN4090-2Z-XL**[5]

	Basic load ratings axial		Fatigue limit load	Limiting speed	Thermally safe operating speed	Bearing frictional torque	Designation
d	dyn. C_a	stat. C_{0a}	C_{ua}	n_G grease	n_ϑ	M_R	
	N	N	N	min^{-1}	min^{-1}	Nm	
30	32 000	64 000	3 850	5 000	2 200	0,5	**ZKLN3062-2RS-XL**
	32 000	64 000	3 850	6 700	4 300	0,25	**ZKLN3062-2Z-XL**
	65 000	108 000	6 500	4 500	2 100	0,8	**ZKLN3072-2RS-XL**[5]
	65 000	108 000	6 500	5 600	4 000	0,4	**ZKLN3072-2Z-XL**[5]
35	45 000	89 000	5 400	4 400	2 000	0,6	**ZKLN3572-2RS-XL**
	45 000	89 000	5 400	5 800	3 800	0,3	**ZKLN3572-2Z-XL**
40	47 500	101 000	6 100	4 000	1 800	0,7	**ZKLN4075-2RS-XL**
	47 500	101 000	6 100	5 200	3 300	0,35	**ZKLN4075-2Z-XL**
	79 000	149 000	9 100	3 500	1 600	1,3	**ZKLN4090-2RS-XL**[5]
	79 000	149 000	9 100	4 400	3 100	0,65	**ZKLN4090-2Z-XL**[5]

medias *https://www.schaeffler.de/std/1F9A*

④ Only valid in assembled condition.

1) Based on rotating inner ring.

2) The recommended INA precision locknuts are not included in the scope of delivery and must be ordered separately.

3) The required axial locknut force must be observed when using other locknuts.

4) Only valid in conjunction with INA precision locknuts.
Observe the guidelines on locating/locating bearing arrangements TPI 123.

5) Heavy series.

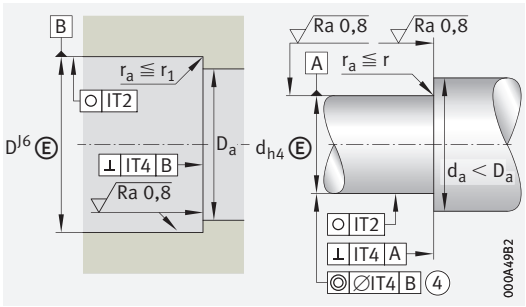

Design of housing and shaft (threaded spindle)

	Mass moment of inertia[1]	Axial runout[1]	Dimensions			Mounting dimensions	
d	M_m		d_1	r	r_1	D_a	d_a
	kg · cm²	µm		min.	min.	max.	min.
30	0,73	2,5	45,5	0,3	0,6	53	40
	0,73	2,5	45,5	0,3	0,6	53	40
	1,91	2,5	51	0,3	0,6	64	47
	1,91	2,5	51	0,3	0,6	64	47
35	1,51	2,5	52	0,3	0,6	62	45
	1,51	2,5	52	0,3	0,6	62	45
40	2,26	2,5	58	0,3	0,6	67	50
	2,26	2,5	58	0,3	0,6	67	50
	5,5	2,5	65	0,6	0,6	80	56
	5,5	2,5	65	0,6	0,6	80	56

	Rigidity	Tilting rigidity	Recommended INA precision locknuts[2]			Required locknut force[3]
	axial		for radial clamping	for axial clamping	Tightening torque[4]	axial
d	c_{aL}	c_{kL}			M_A	
	N/µm	Nm/mrad			Nm	N
30	850	300	ZM30	AM30	32	9 947
	850	300	ZM30	AM30	32	9 947
	950	400	ZMA30/52	AM30	65	19 509
	950	400	ZMA30/52	AM30	65	19 509
35	900	400	ZM35	AM35/58	40	10 770
	900	400	ZM35	AM35/58	40	10 770
40	1 000	550	ZM40	AM40	55	13 412
	1 000	550	ZM40	AM40	55	13 412
	1 200	750	ZMA40/62	AM40	110	25 185
	1 200	750	ZMA40/62	AM40	110	25 185

Axial angular contact ball bearings

Without fixing holes

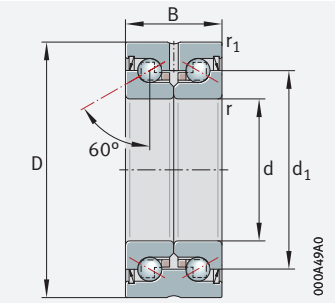

ZKLN..-2RS, ZKLN..-2Z

d = 50 – 100 mm

Main dimensions			Mass	Designation
d	D	B	m ≈ kg	
50 0/–0,005	110 0/–0,01	54 0/–0,25	2,5	**ZKLN50110-2RS-XL**[5]
0/–0,005	110 0/–0,01	54 0/–0,25	2,5	**ZKLN50110-2Z-XL**[5]
0/–0,005	90 0/–0,01	34 0/–0,25	0,88	**ZKLN5090-2RS-XL**
0/–0,005	90 0/–0,01	34 0/–0,25	0,88	**ZKLN5090-2Z-XL**
60 0/–0,008	110 0/–0,015	45 0/–0,25	2,2	**ZKLN60110-2Z-XL**
70 0/–0,008	120 0/–0,015	45 0/–0,25	2,4	**ZKLN70120-2Z-XL**
80 0/–0,008	130 0/–0,015	45 0/–0,25	2,7	**ZKLN80130-2Z-XL**
90 0/–0,008	150 0/–0,015	55 0/–0,25	4,5	**ZKLN90150-2Z-XL**
100 0/–0,008	160 0/–0,015	55 0/–0,25	4,9	**ZKLN100160-2Z-XL**

	Basic load ratings axial		Fatigue limit load	Limiting speed	Thermally safe operating speed	Bearing frictional torque	Designation
d	dyn. C_a	stat. C_{0a}	C_{ua}	n_G grease	n_ϑ	M_R	
	N	N	N	min^{-1}	min^{-1}	Nm	
50	125 000	250 000	15 200	2 900	1 200	2,6	**ZKLN50110-2RS-XL**[5]
	125 000	250 000	15 200	3 500	2 500	1,3	**ZKLN50110-2Z-XL**[5]
	51 000	126 000	7 700	3 200	1 500	0,9	**ZKLN5090-2RS-XL**
	51 000	126 000	7 700	4 200	3 000	0,45	**ZKLN5090-2Z-XL**
60	93 000	214 000	13 000	4 000	3 000	1	**ZKLN60110-2Z-XL**
70	97 000	241 000	14 600	3 800	2 800	1,2	**ZKLN70120-2Z-XL**
80	100 000	265 000	15 800	3 600	2 700	1,4	**ZKLN80130-2Z-XL**
90	149 000	395 000	21 900	3 500	2 300	2,3	**ZKLN90150-2Z-XL**
100	154 000	435 000	23 000	3 300	2 150	2,6	**ZKLN100160-2Z-XL**

medias *https://www.schaeffler.de/std/1F9A*

④ Only valid in assembled condition.

1) Based on rotating inner ring.

2) The recommended INA precision locknuts are not included in the scope of delivery and must be ordered separately.

3) The required axial locknut force must be observed when using other locknuts.

4) Only valid in conjunction with INA precision locknuts.
Observe the guidelines on locating/locating bearing arrangements TPI 123.

5) Heavy series.

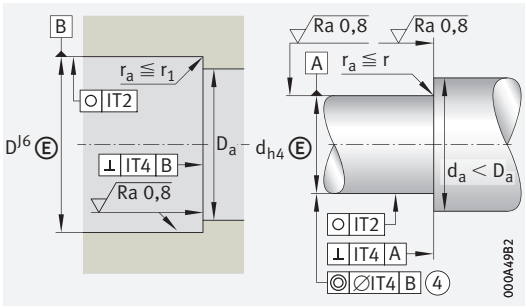

Design of housing and shaft (threaded spindle)

d	Mass moment of inertia[1] M_m kg · cm²	Axial runout[1] µm	Dimensions d_1	r min.	r_1 min.	Mounting dimensions D_a max.	d_a min.
50	15,2	2,5	80	0,6	0,6	98	63
	15,2	2,5	80	0,6	0,6	98	63
	5,24	2,5	72	0,3	0,6	82	63
	5,24	2,5	72	0,3	0,6	82	63
60	13,7	3	85	0,6	0,6	100	82
70	19,8	3	95	0,6	0,6	110	92
80	27,6	3	105	0,6	0,6	120	102
90	59,9	3	120	0,6	0,6	138	116
100	85,3	3	132	0,6	0,6	150	128

d	Rigidity axial c_{aL} N/µm	Tilting rigidity c_{kL} Nm/mrad	Recommended INA precision locknuts[2] for radial clamping	for axial clamping	Tightening torque[4] M_A Nm	Required locknut force[3] axial N
50	1 400	1 500	ZMA50/75	AM50	150	28 451
	1 400	1 500	ZMA50/75	AM50	150	28 451
	1 250	1 000	ZM50	AM50	85	16 280
	1 250	1 000	ZM50	AM50	85	16 280
60	1 300	1 650	ZMA60/98	AM60	100	16 700
70	1 450	2 250	ZMA70/110	AM70	130	19 031
80	1 600	3 000	ZMA80/120	AM80	160	20 604
90	1 700	4 400	ZMA90/130	AM90	200	22 731
100	1 900	5 800	ZMA100/140	AM100	250	25 624

Axial angular contact ball bearings

Without fixing holes
Less stringent tolerances

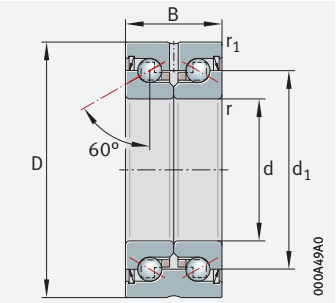

ZKLN..-2RS-PE

d = 6 – 50 mm

Main dimensions			Mass	Designation
d	D	B	m ≈ kg	
6 +0,003/–0,005	24 0/–0,01	15 0/–0,25	0,03	**ZKLN0624-2RS-PE**
10 0 /–0,008	34 0/–0,011	20 0/–0,25	0,1	**ZKLN1034-2RS-PE**
12 0 /–0,01	42 0/–0,011	25 0/–0,25	0,2	**ZKLN1242-2RS-PE**
15 0 /–0,01	45 0/–0,011	25 0/–0,25	0,21	**ZKLN1545-2RS-PE**
17 0 /–0,01	47 0/–0,011	25 0/–0,25	0,22	**ZKLN1747-2RS-PE**
20 0 /–0,01	52 0/–0,013	28 0/–0,25	0,31	**ZKLN2052-2RS-PE**
25 0 /–0,01	57 0/–0,013	28 0/–0,25	0,34	**ZKLN2557-2RS-PE**
30 0 /–0,01	62 0/–0,013	28 0/–0,25	0,39	**ZKLN3062-2RS-PE**
35 0 /–0,01	72 0/–0,013	34 0/–0,25	0,51	**ZKLN3572-2RS-PE**
50 0 /–0,01	90 0/–0,015	34 0/–0,25	0,88	**ZKLN5090-2RS-PE**

	Basic load ratings axial		Fatigue limit load	Limiting speed	Thermally safe operating speed	Bearing frictional torque	Designation
d	dyn. C_a N	stat. C_{0a} N	C_{ua} N	n_G grease min^{-1}	n_ϑ min^{-1}	M_R Nm	
6	6 900	8 500	385	16 400	6 800	0,04	**ZKLN0624-2RS-PE**
10	13 400	18 800	850	10 900	4 600	0,12	**ZKLN1034-2RS-PE**
12	16 900	24 700	1 130	9 200	3 800	0,16	**ZKLN1242-2RS-PE**
15	17 900	28 000	1 280	8 200	3 500	0,2	**ZKLN1545-2RS-PE**
17	18 800	31 000	1 420	7 600	3 300	0,24	**ZKLN1747-2RS-PE**
20	26 000	47 000	2 130	6 600	3 000	0,3	**ZKLN2052-2RS-PE**
25	27 500	55 000	2 500	5 700	2 600	0,4	**ZKLN2557-2RS-PE**
30	29 000	64 000	2 900	5 000	2 200	0,5	**ZKLN3062-2RS-PE**
35	41 000	89 000	4 050	4 400	2 000	0,6	**ZKLN3572-2RS-PE**
50	46 500	126 000	5 800	3 200	1 500	0,9	**ZKLN5090-2RS-PE**

medias *https://www.schaeffler.de/std/1F9A*

④ Only valid in assembled condition.

1) Based on rotating inner ring.

2) The recommended INA precision locknuts are not included in the scope of delivery and must be ordered separately.

3) The required axial locknut force must be observed when using other locknuts.

4) Only valid in conjunction with INA precision locknuts.
Observe the guidelines on locating/locating bearing arrangements TPI 123.

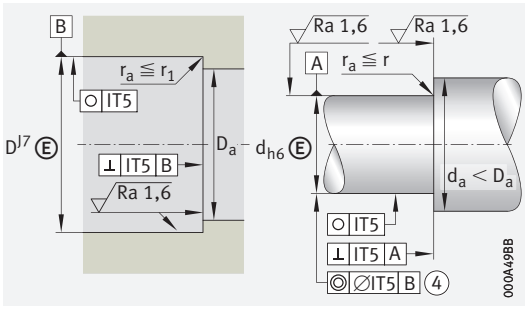

Design of housing and shaft (threaded spindle)

	Mass moment of inertia[1]	Axial runout[1]	Dimensions			Mounting dimensions	
d	M_m		d_1	r	r_1	D_a	d_a
	kg · cm²	µm		min.	min.	max.	min.
6	0,0044	5	14	0,3	0,6	19	9
10	0,029	5	21	0,3	0,6	28	14
12	0,068	5	25	0,3	0,6	33	16
15	0,102	5	28	0,3	0,6	35	20
17	0,132	5	30	0,3	0,6	37	23
20	0,273	5	34,5	0,3	0,6	43	25
25	0,486	5	40,5	0,3	0,6	48	32
30	0,73	5	45,5	0,3	0,6	53	40
35	1,51	5	52	0,3	0,6	62	45
50	5,24	5	72	0,3	0,6	82	63

	Rigidity	Tilting rigidity	Recommended INA precision locknuts[2]			Required locknut force[3]
	axial		for radial clamping	for axial clamping	Tightening torque[4]	axial
d	c_{aL}	c_{kL}			M_A	
	N/µm	Nm/mrad			Nm	N
6	200	8	ZM06	–	2	2 404
10	325	25	ZM10	–	6	4 891
12	375	50	ZM12	–	8	5 307
15	400	65	ZM15	AM15	10	5 484
17	450	80	ZM17	AM17	15	7 514
20	650	140	ZM20	AM20	18	8 258
25	750	200	ZM25	AM25	25	9 123
30	850	300	ZM30	AM30	32	9 947
35	900	400	ZM35	AM35/38	40	10 770
50	1 250	1 000	ZM50	AM50	85	16 280

Axial angular contact ball bearings

Without fixing holes
Matched pair

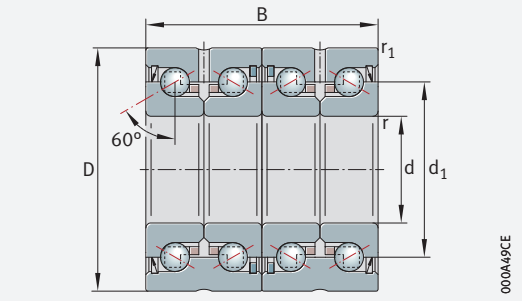

ZKLN..-2RS-2AP

d = 17 – 50 mm

Main dimensions			Mass	Designation
d	D	B	m ≈ kg	
17 0/–0,005	47 0/–0,01	50 0/–0,5	0,44	**ZKLN1747-2RS-2AP-XL**
20 0/–0,005	52 0/–0,01	56 0/–0,5	0,62	**ZKLN2052-2RS-2AP-XL**
25 0/–0,005	57 0/–0,01	56 0/–0,5	0,68	**ZKLN2557-2RS-2AP-XL**
30 0/–0,005	62 0/–0,01	56 0/–0,5	0,78	**ZKLN3062-2RS-2AP-XL**
35 0/–0,005	72 0/–0,01	68 0/–0,5	1,02	**ZKLN3572-2RS-2AP-XL**
40 0/–0,005	75 0/–0,01	68 0/–0,5	1,22	**ZKLN4075-2RS-2AP-XL**
50 0/–0,005	90 0/–0,01	68 0/–0,5	1,76	**ZKLN5090-2RS-2AP-XL**

	Basic load ratings axial		Fatigue limit load	Limiting speed	Thermally safe operating speed	Bearing frictional torque	Designation
d	dyn. C_a N	stat. C_{0a} N	C_{ua} N	n_G grease min^{-1}	n_ϑ min^{-1}	M_R Nm	
17	33 500	62 000	3 800	7 600	3 300	0,36	**ZKLN1747-2RS-2AP-XL**
20	46 000	94 000	5 700	6 600	3 000	0,45	**ZKLN2052-2RS-2AP-XL**
25	49 000	111 000	6 700	5 700	2 600	0,6	**ZKLN2557-2RS-2AP-XL**
30	52 000	127 000	7 700	5 000	2 200	0,75	**ZKLN3062-2RS-2AP-XL**
35	73 000	177 000	10 800	4 400	2 000	0,9	**ZKLN3572-2RS-2AP-XL**
40	77 000	202 000	12 300	4 000	1 800	1,05	**ZKLN4075-2RS-2AP-XL**
50	83 000	250 000	15 300	3 200	1 500	1,35	**ZKLN5090-2RS-2AP-XL**

medias *https://www.schaeffler.de/std/1F9A*

Further sizes and designs with seals 2Z by agreement.

④ Only valid in assembled condition.

1) Based on rotating inner ring.

2) The recommended INA precision locknuts are not included in the scope of delivery and must be ordered separately.

3) The required axial locknut force must be observed when using other locknuts.

4) Only valid in conjunction with INA precision locknuts.
Observe the guidelines on locating/locating bearing arrangements TPI 123.

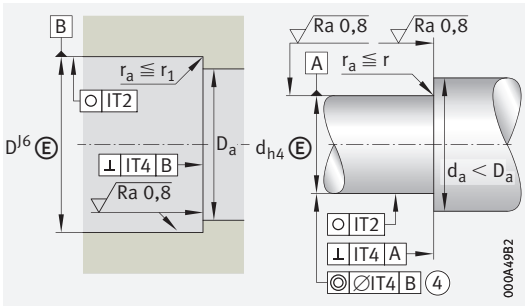

Design of housing and shaft (threaded spindle)

d	Mass moment of inertia[1] M_m kg · cm²	Axial runout[1] µm	Dimensions d_1	r min.	r_1 min.	Mounting dimensions D_a max.	d_a min.
17	0,264	2	30	0,3	0,6	37	23
20	0,546	2	34,5	0,3	0,6	43	25
25	0,972	2	40,5	0,3	0,6	48	32
30	1,46	2,5	45,5	0,3	0,6	53	40
35	3,02	2,5	52	0,3	0,6	62	45
40	4,52	2,5	58	0,3	0,6	67	50
50	10,48	2,5	72	0,3	0,6	82	63



d	Rigidity axial c_{aL} N/µm	Tilting rigidity c_{kL} Nm/mrad	Recommended INA precision locknuts[2] for radial clamping	for axial clamping	Tightening torque[4] M_A Nm	Required locknut force[3] axial N
17	800	200	ZM17	AM17	15	7 514
20	1 150	320	ZMA20/38	AM20	18	8 258
25	1 300	450	ZMA25/45	AM25	25	9 123
30	1 500	620	ZMA30/52	AM30	32	9 947
35	1 600	900	ZMA35/58	AM35/58	40	10 770
40	1 750	1 200	ZMA40/62	AM40	55	13 412
50	2 200	2 250	ZMA50/75	AM50	85	16 280

Axial angular contact ball bearings

Single direction
Open

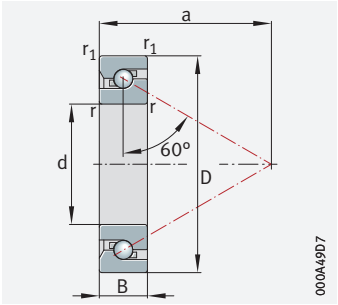

7602, BSB

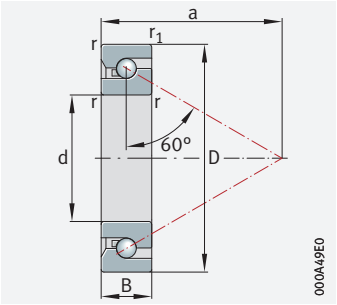

BSB..-SU-XL

d = 12 – 17 mm

Main dimensions			Mass	Designation
d	D	B	m ≈ kg	
12 0/–0,004	32 0/–0,006	10 0/–0,08	0,042	**7602012-TVP**
15 0/–0,004	35 0/–0,006	11 0/–0,08	0,052	**7602015-TVP**
0/–0,004	47 0/–0,006	15 0/–0,12	0,14	**BSB1547-SU-XL**
0/–0,004	47 0/–0,006	15 0/–0,12	0,14	**BSB1547-SU-XL-L055**
17 0/–0,004	40 0/–0,006	12 0/–0,08	0,074	**7602017-TVP**
0/–0,004	47 0/–0,006	15 0/–0,12	0,13	**BSB1747-SU-XL**
0/–0,004	47 0/–0,006	15 0/–0,12	0,13	**BSB1747-SU-XL-L055**

	Basic load ratings axial		Fatigue limit load	Limiting speed	Thermally safe operating speed	Bearing frictional torque[1]	Designation
d	dyn. C_a	stat. C_{0a}	C_{ua}	n_G grease	n_ϑ	M_R	
	N	N	N	min^{-1}	min^{-1}	Nm	
12	12 200	20 700	940	14 100	8 000	0,015	**7602012-TVP**
15	13 100	24 700	1 120	12 300	6 700	0,02	**7602015-TVP**
	28 500	47 000	2 850	8 700	6 200	0,08	**BSB1547-SU-XL**
	28 500	47 000	2 850	8 700	6 200	0,08	**BSB1547-SU-XL-L055**
17	17 200	32 500	1 470	10 600	6 000	0,03	**7602017-TVP**
	28 500	47 000	2 850	8 700	6 200	0,08	**BSB1747-SU-XL**
	28 500	47 000	2 850	8 700	6 200	0,08	**BSB1747-SU-XL-L055**

medias *https://www.schaeffler.de/std/1F9A*

④ Only valid in assembled condition.

1) Valid for single bearings with stated preload force.

2) Valid for matched pair of bearings in O or X arrangement.

3) Based on rotating inner ring.

4) The recommended INA precision locknuts are not included in the scope of delivery and must be ordered separately.

5) The required axial locknut force must be observed when using other locknuts.

6) Only valid in conjunction with INA precision locknuts.
Observe the guidelines on locating/locating bearing arrangements TPI 123.

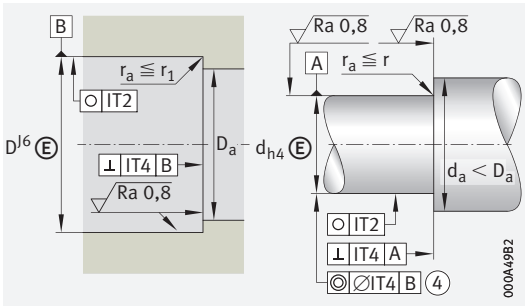

Design of housing and shaft (threaded spindle)

	Dimensions			Mounting dimensions			
d	r min.	r_1 min.	a ≈	D_a max.		d_a min.	
12	0,6	0,6	24	27	H12	17	h12
15	0,6	0,6	27,5	30	H12	20,5	h12
	1	0,6	29,9	43	H12	27	h12
	1	0,6	29,9	43	H12	27	h12
17	0,6	0,6	31	34,5	H12	23	h12
	1	0,6	29,9	43	H12	27	h12
	1	0,6	29,9	43	H12	27	h12

	Rigidity[2]	Axial runout[3]	Recommended INA precision locknuts[4]			Required locknut force[5]
	axial		for radial clamping	for axial clamping	Tightening torque[6]	axial
d	c_{aL}				M_A	
	N/µm	µm			Nm	N
12	476	2	ZM12	–	8	6 110
15	516	2	ZM15	AM15	10	5 740
	764	2	ZM17	AM17	15	9 000
	764	2	ZM17	AM17	15	9 000
17	596	2	ZM17	AM17	15	8 060
	764	2	ZM17	AM17	15	9 000
	764	2	ZM17	AM17	15	9 000

Axial angular contact ball bearings

Single direction
Open

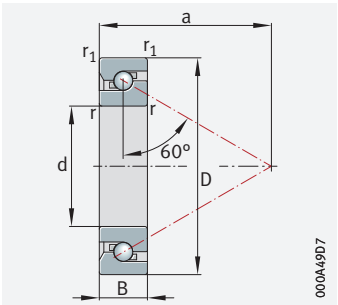

7602, 7603, BSB

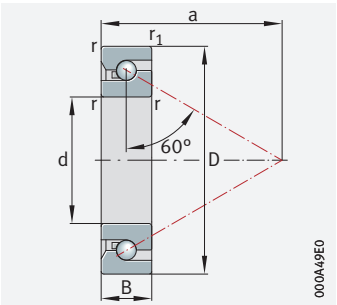

BSB..-SU-XL

d = 20 – 25 mm

Main dimensions				Mass	Designation
d		D	B	m	
				≈ kg	
20	0/–0,005	47 0/–0,006	14 0/–0,12	0,139	**7602020-TVP**
	0/–0,005	47 0/–0,006	15 0/–0,12	0,12	**BSB2047-SU-XL**
	0/–0,005	47 0/–0,006	15 0/–0,12	0,12	**BSB2047-SU-XL-L055**
	0/–0,005	52 0/–0,007	15 0/–0,12	0,17	**7603020-TVP**
25	0/–0,005	52 0/–0,007	15 0/–0,12	0,147	**7602025-TVP**
	0/–0,005	62 0/–0,007	17 0/–0,12	0,275	**7603025-TVP**
	0/–0,005	62 0/–0,007	15 0/–0,12	0,24	**BSB2562-SU-XL**
	0/–0,005	62 0/–0,007	15 0/–0,12	0,24	**BSB2562-SU-XL-L055**

	Basic load ratings axial		Fatigue limit load	Limiting speed	Thermally safe operating speed	Bearing frictional torque[1]	Designation
d	dyn. C_a	stat. C_{0a}	C_{ua}	n_G grease	n_ϑ	M_R	
	N	N	N	min^{-1}	min^{-1}	Nm	
20	20 300	41 500	1 900	9 200	5 000	0,05	**7602020-TVP**
	28 500	47 000	2 850	8 700	6 200	0,08	**BSB2047-SU-XL**
	28 500	47 000	2 850	8 700	6 200	0,08	**BSB2047-SU-XL-L055**
	25 500	53 000	2 430	8 200	4 500	0,06	**7603020-TVP**
25	23 200	50 000	2 280	8 000	4 500	0,07	**7602025-TVP**
	29 500	68 000	3 100	6 800	3 800	0,09	**7603025-TVP**
	32 000	64 000	3 850	6 700	5 400	0,13	**BSB2562-SU-XL**
	32 000	64 000	3 850	6 700	5 400	0,13	**BSB2562-SU-XL-L055**

medias *https://www.schaeffler.de/std/1F9A*

④ Only valid in assembled condition.

1) Valid for single bearings with stated preload force.

2) Valid for matched pair of bearings in O or X arrangement.

3) Based on rotating inner ring.

4) The recommended INA precision locknuts are not included in the scope of delivery and must be ordered separately.

5) The required axial locknut force must be observed when using other locknuts.

6) Only valid in conjunction with INA precision locknuts.
Observe the guidelines on locating/locating bearing arrangements TPI 123.

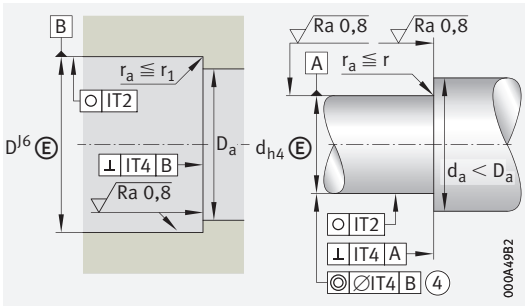

Design of housing and shaft (threaded spindle)

d	Dimensions			Mounting dimensions			
	r min.	r_1 min.	a ≈	D_a max.		d_a min.	
20	1	1	36	39,5	H12	27,5	h12
	1	0,6	29,9	43	H12	27	h12
	1	0,6	29,9	43	H12	27	h12
	1,1	1,1	39,5	43,5	H12	30,5	h12
25	1	1	41	45	H12	32	h12
	1,1	1,1	47,5	52	H12	38	h12
	1	0,6	39,4	54	H12	38	h12
	1	0,6	39,4	54	H12	38	h12

d	Rigidity[2] axial c_{aL} N/µm	Axial runout[3] µm	Recommended INA precision locknuts[4] for radial clamping	for axial clamping	Tightening torque[6] M_A Nm	Required locknut force[5] axial N
20	703	2	ZM20	AM20	18	8 490
	764	2	ZM20	AM20	18	9 000
	764	2	ZM20	AM20	18	9 000
	787	2	ZM20	AM20	25	11 600
25	772	2	ZM25	AM25	25	9 430
	917	2	ZM25	AM25	40	14 480
	1 001	2	ZMA25/45	AM25	30	11 810
	1 001	2	ZMA25/45	AM25	30	11 810

Axial angular contact ball bearings

Single direction
Open

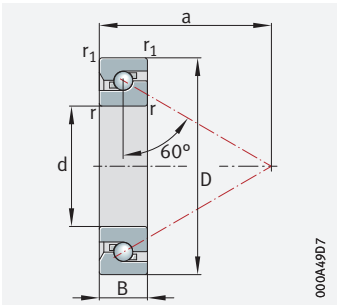

7602, 7603, BSB

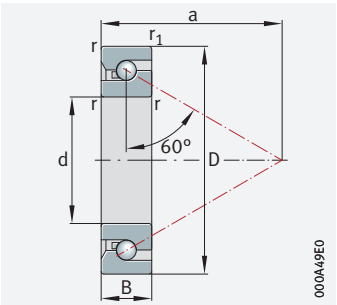

BSB..-SU-XL

d = 30 – 35 mm

Main dimensions				Mass	Designation
d	D		B	m	
				≈ kg	
30 0/–0,005	62 0/–0,007		16 0/–0,12	0,232	**7602030-TVP**
0/–0,005	62 0/–0,007		15 0/–0,12	0,22	**BSB3062-SU-XL**
0/–0,005	62 0/–0,007		15 0/–0,12	0,22	**BSB3062-SU-XL-L055**
0/–0,005	72 0/–0,007		19 0/–0,12	0,409	**7603030-TVP**
35 0/–0,006	72 0/–0,007		17 0/–0,12	0,339	**7602035-TVP**
0/–0,006	72 0/–0,007		15 0/–0,12	0,3	**BSB3572-SU-XL**
0/–0,006	72 0/–0,007		15 0/–0,12	0,3	**BSB3572-SU-XL-L055**
0/–0,006	80 0/–0,007		21 0/–0,12	0,546	**7603035-TVP**

	Basic load ratings axial		Fatigue limit load	Limiting speed	Thermally safe operating speed	Bearing frictional torque[1]	Designation
d	dyn. C_a	stat. C_{0a}	C_{ua}	n_G grease	n_ϑ	M_R	
	N	N	N	min^{-1}	min^{-1}	Nm	
30	27 500	66 000	3 000	6 700	3 800	0,09	**7602030-TVP**
	32 000	64 000	3 850	6 700	5 400	0,13	**BSB3062-SU-XL**
	32 000	64 000	3 850	6 700	5 400	0,13	**BSB3062-SU-XL-L055**
	36 500	89 000	4 050	5 700	3 200	0,13	**7603030-TVP**
35	31 500	81 000	3 700	5 700	3 200	0,12	**7602035-TVP**
	40 500	89 000	5 400	5 400	4 700	0,18	**BSB3572-SU-XL**
	40 500	89 000	5 400	5 400	4 700	0,18	**BSB3572-SU-XL-L055**
	38 000	100 000	4 550	5 100	3 000	0,17	**7603035-TVP**

medias *https://www.schaeffler.de/std/1F9A*

④ Only valid in assembled condition.

1) Valid for single bearings with stated preload force.

2) Valid for matched pair of bearings in O or X arrangement.

3) Based on rotating inner ring.

4) The recommended INA precision locknuts are not included in the scope of delivery and must be ordered separately.

5) The required axial locknut force must be observed when using other locknuts.

6) Only valid in conjunction with INA precision locknuts.
Observe the guidelines on locating/locating bearing arrangements TPI 123.

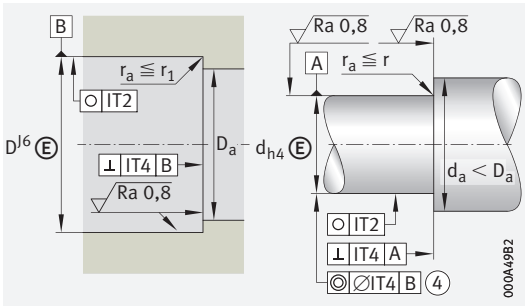

Design of housing and shaft (threaded spindle)

	Dimensions			Mounting dimensions			
d	r min.	r_1 min.	a ≈	D_a max.		d_a min.	
30	1	1	48	52,5	H12	39,5	h12
	1	0,6	39,4	54	H12	38	h12
	1	0,6	39,4	54	H12	38	h12
	1,1	1,1	55,5	61	H12	45	h12
35	1,1	1,1	55	60,5	H12	46,5	h12
	1	0,6	48,5	65	H12	47	h12
	1	0,6	48,5	65	H12	47	h12
	1,5	1,5	61,5	67	H12	51	h12



	Rigidity[2]	Axial runout[3]	Recommended INA precision locknuts[4]			Required locknut force[5]
	axial		for radial clamping	for axial clamping	Tightening torque[6]	axial
d	c_{aL}				M_A	
	N/µm	µm			Nm	N
30	893	2	ZM30	AM30	32	10 240
	1 034	2,5	ZM30	AM30	32	11 080
	1 034	2,5	ZM30	AM30	32	11 080
	1 073	2	ZM30	AM30	55	16 180
35	1 020	2	ZM35	AM35	40	11 310
	1 196	2,5	ZM35	AM35	50	15 220
	1 196	2,5	ZM35	AM35	50	15 220
	1 192	2	ZM35	AM35	65	17 380

Axial angular contact ball bearings

Single direction
Open

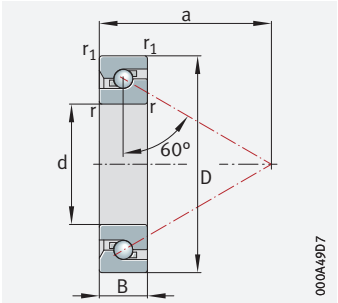

7602, 7603, BSB

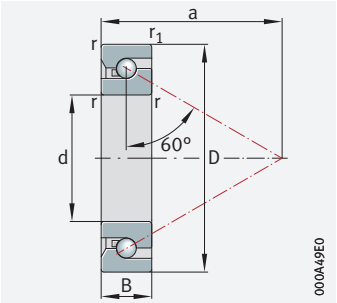

BSB..-SU-XL

d = 40 – 40 mm

Main dimensions				Mass	Designation
d		D	B	m	
				≈ kg	
40	0/–0,006	72 0/–0,007	15 0/–0,12	0,26	**BSB4072-SU-XL**
	0/–0,006	72 0/–0,007	15 0/–0,12	0,26	**BSB4072-SU-XL-L055**
	0/–0,006	80 0/–0,007	18 0/–0,12	0,418	**7602040-TVP**
	0/–0,006	90 0/–0,008	23 0/–0,12	0,751	**7603040-TVP**
	0/–0,006	90 0/–0,008	20 0/–0,12	0,65	**BSB040090-T**
	0/–0,006	90 0/–0,008	20 0/–0,12	0,65	**BSB4090-SU-XL**
	0/–0,006	90 0/–0,008	20 0/–0,12	0,65	**BSB4090-SU-XL-L055**

	Basic load ratings axial		Fatigue limit load	Limiting speed	Thermally safe operating speed	Bearing frictional torque[1]	Designation
d	dyn. C_a	stat. C_{0a}	C_{ua}	n_G grease	n_ϑ	M_R	
	N	N	N	min^{-1}	min^{-1}	Nm	
40	40 500	89 000	5 400	5 400	4 700	0,18	**BSB4072-SU-XL**
	40 500	89 000	5 400	5 400	4 700	0,18	**BSB4072-SU-XL-L055**
	39 000	106 000	4 800	4 900	2 800	0,17	**7602040-TVP**
	52 000	138 000	6 300	4 500	2 600	0,23	**7603040-TVP**
	52 000	138 000	6 300	4 500	3 100	0,23	**BSB040090-T**
	65 000	153 000	9 300	4 500	3 100	0,23	**BSB4090-SU-XL**
	65 000	153 000	9 300	4 500	3 100	0,23	**BSB4090-SU-XL-L055**

medias *https://www.schaeffler.de/std/1F9A*

④ Only valid in assembled condition.

1) Valid for single bearings with stated preload force.

2) Valid for matched pair of bearings in O or X arrangement.

3) Based on rotating inner ring.

4) The recommended INA precision locknuts are not included in the scope of delivery and must be ordered separately.

5) The required axial locknut force must be observed when using other locknuts.

6) Only valid in conjunction with INA precision locknuts.
Observe the guidelines on locating/locating bearing arrangements TPI 123.

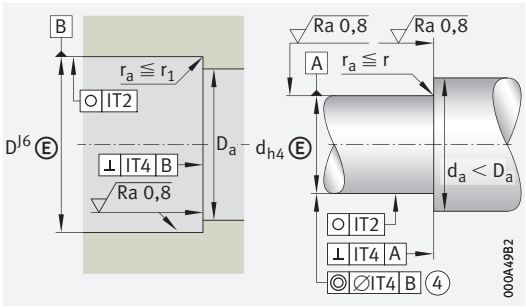

Design of housing and shaft (threaded spindle)

d	Dimensions			Mounting dimensions			
	r min.	r_1 min.	a ≈	D_a max.		d_a min.	
40	1	0,6	48,5	65	H12	47	h12
	1	0,6	48,5	65	H12	47	h12
	1,1	1,1	62,5	69,5	H12	53,5	h12
	1,5	1,5	68,5	75,5	H12	56,5	h12
	1,5	1,5	67	75,5	H12	56,5	h12
	1,5	1,5	67	75,5	H12	56,5	h12
	1,5	1,5	67	75,5	H12	56,5	h12

d	Rigidity[2] axial c_{aL} N/µm	Axial runout[3] µm	Recommended INA precision locknuts[4]			Required locknut force[5] axial
			for radial clamping	for axial clamping	Tightening torque[6] M_A Nm	N
40	1 235	2,5	ZM40	AM40	60	15 650
	1 235	2,5	ZM40	AM40	60	15 650
	1 190	2	ZM40	AM40	55	13 330
	1 292	2	ZM40	AM40	110	25 120
	1 292	2	ZM40	AM40	110	25 120
	1 390	2,5	ZM40	AM40	110	26 080
	1 390	2,5	ZM40	AM40	110	26 080

Axial angular contact ball bearings

Single direction
Open

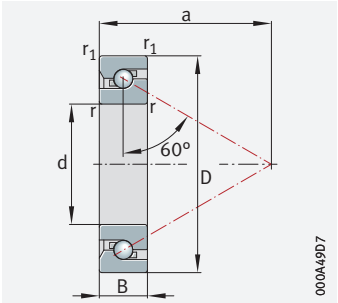

7602, 7603, BSB

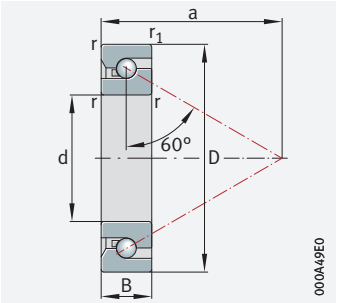

BSB..-SU-XL

d = 45 – 45 mm

Main dimensions				Mass	Designation
d	D		B	m ≈ kg	
45 0/–0,006	75 0/–0,007		15 0/–0,12	0,26	**BSB045075-T**
0/–0,006	85 0/–0,008		19 0/–0,12	0,488	**7602045-TVP**
0/–0,006	100 0/–0,008		25 0/–0,12	0,992	**7603045-TVP**
0/–0,006	100 0/–0,008		20 0/–0,12	0,81	**BSB045100-T**
0/–0,006	100 0/–0,008		20 0/–0,12	0,8	**BSB45100-SU-XL**
0/–0,006	100 0/–0,008		20 0/–0,12	0,8	**BSB45100-SU-XL-L055**

	Basic load ratings axial		Fatigue limit load	Limiting speed	Thermally safe operating speed	Bearing frictional torque[1]	Designation
d	dyn. C_a	stat. C_{0a}	C_{ua}	n_G grease	n_ϑ	M_R	
	N	N	N	min^{-1}	min^{-1}	Nm	
45	30 000	85 000	3 850	5 100	3 300	0,13	**BSB045075-T**
	39 500	111 000	5 100	4 700	2 600	0,19	**7602045-TVP**
	62 000	172 000	7 800	4 000	2 200	0,3	**7603045-TVP**
	62 000	172 000	7 800	4 000	2 700	0,3	**BSB045100-T**
	68 000	172 000	10 400	4 000	2 700	0,33	**BSB45100-SU-XL**
	68 000	172 000	10 400	4 000	2 700	0,33	**BSB45100-SU-XL-L055**

medias *https://www.schaeffler.de/std/1F9A*

④ Only valid in assembled condition.

1) Valid for single bearings with stated preload force.

2) Valid for matched pair of bearings in O or X arrangement.

3) Based on rotating inner ring.

4) The recommended INA precision locknuts are not included in the scope of delivery and must be ordered separately.

5) The required axial locknut force must be observed when using other locknuts.

6) Only valid in conjunction with INA precision locknuts.
Observe the guidelines on locating/locating bearing arrangements TPI 123.

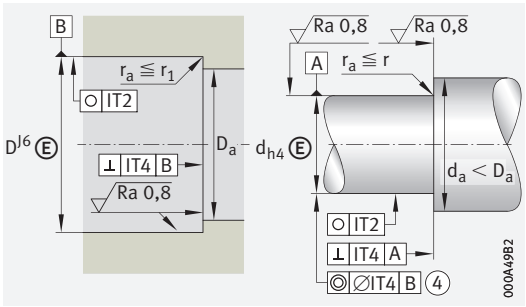

Design of housing and shaft (threaded spindle)

d	Dimensions			Mounting dimensions			
	r min.	r_1 min.	a ≈	D_a max.		d_a min.	
45	1	1	59,5	68	H12	52	h12
	1,1	1,1	66	73	H12	57	h12
	1,5	1,5	77,5	85,5	H12	64,5	h12
	1,5	1,5	75	85,5	H12	64,5	h12
	1,5	1,5	75	85,5	H12	64,5	h12
	1,5	1,5	75	85,5	H12	64,5	h12

d	Rigidity[2]	Axial runout[3]	Recommended INA precision locknuts[4]			Required locknut force[5]
	axial		for radial clamping	for axial clamping	Tightening torque[6]	axial
	c_{aL}				M_A	
	N/µm	µm			Nm	N
45	1 072	2	ZM45	AM45	50	11 140
	1 247	2	ZM45	AM45	65	14 410
	1 473	2	ZM45	AM45	120	25 160
	1 473	2	ZM45	AM45	120	25 160
	1 473	2,5	ZM50	AM50	120	23 770
	1 473	2,5	ZM50	AM50	120	23 770

Axial angular contact ball bearings

Single direction
Open

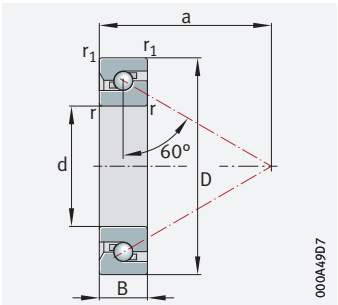

7602, 7603, BSB

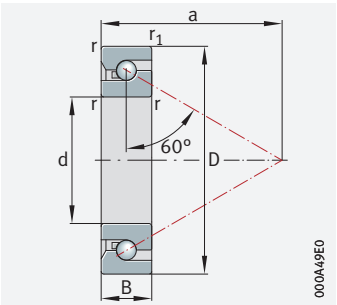

BSB..-SU-XL

d = 50 – 50 mm

Main dimensions				Mass	Designation
d	D		B	m	
				≈ kg	
50 0/–0,006	90 0/–0,008		20 0/–0,12	0,557	**7602050-TVP**
0/–0,006	100 0/–0,008		20 0/–0,12	0,75	**BSB050100-T**
0/–0,006	100 0/–0,008		20 0/–0,12	0,75	**BSB50100-SU-XL**
0/–0,006	100 0/–0,008		20 0/–0,12	0,75	**BSB50100-SU-XL-L055**
0/–0,006	110 0/–0,008		27 0/–0,12	1,29	**7603050-TVP**

	Basic load ratings axial		Fatigue limit load	Limiting speed	Thermally safe operating speed	Bearing frictional torque[1]	Designation
d	dyn. C_a	stat. C_{0a}	C_{ua}	n_G grease	n_ϑ	M_R	
	N	N	N	min^{-1}	min^{-1}	Nm	
50	41 000	122 000	5 600	4 300	2 400	0,23	**7602050-TVP**
	62 000	172 000	7 800	4 000	2 700	0,33	**BSB050100-T**
	68 000	172 000	10 400	4 000	2 700	0,33	**BSB50100-SU-XL**
	68 000	172 000	10 400	4 000	2 700	0,33	**BSB50100-SU-XL-L055**
	72 000	203 000	9 200	3 600	2 000	0,36	**7603050-TVP**

medias *https://www.schaeffler.de/std/1F9A*

④ Only valid in assembled condition.

1) Valid for single bearings with stated preload force.

2) Valid for matched pair of bearings in O or X arrangement.

3) Based on rotating inner ring.

4) The recommended INA precision locknuts are not included in the scope of delivery and must be ordered separately.

5) The required axial locknut force must be observed when using other locknuts.

6) Only valid in conjunction with INA precision locknuts.
Observe the guidelines on locating/locating bearing arrangements TPI 123.

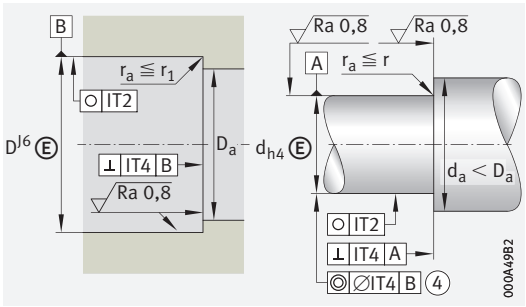

Design of housing and shaft (threaded spindle)

d	Dimensions			Mounting dimensions			
	r min.	r_1 min.	a ≈	D_a max.		d_a min.	
50	1,1	1,1	71,5	79	H12	63	h12
	1,5	1,5	75	85,5	H12	64,5	h12
	1,5	1,5	75	85,5	H12	64,5	h12
	1,5	1,5	75	85,5	H12	64,5	h12
	2	2	85,5	94	H12	72	h12

d	Rigidity[2] axial c_{aL} N/µm	Axial runout[3] µm	Recommended INA precision locknuts[4] for radial clamping	for axial clamping	Tightening torque[6] M_A Nm	Required locknut force[5] axial N
50	1 360	2	ZM50	AM50	85	16 810
	1 473	2	ZM50	AM50	120	23 770
	1 473	2,5	ZM50	AM50	120	23 770
	1 473	2,5	ZM50	AM50	120	23 770
	1 601	2	ZM50	AM50	150	28 930

Axial angular contact ball bearings

Single direction
Open

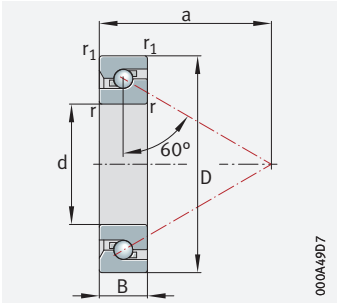

7602, 7603, BSB

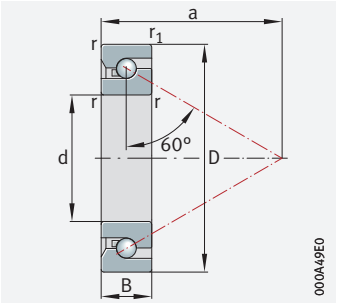

BSB..-SU-XL

d = 55 – 60 mm

Main dimensions			Mass	Designation
d	D	B	m ≈ kg	
55 0/–0,007	90 0/–0,008	15 0/–0,15	0,38	**BSB055090-T**
0/–0,007	100 0/–0,008	21 0/–0,15	0,74	**7602055-TVP**
0/–0,007	120 0/–0,008	29 0/–0,15	1,67	**7603055-TVP**[7]
0/–0,007	120 0/–0,008	20 0/–0,15	1,2	**BSB055120-T**[7]
0/–0,007	120 0/–0,008	20 0/–0,15	1,2	**BSB55120-SU-XL**
0/–0,007	120 0/–0,008	20 0/–0,15	1,2	**BSB55120-SU-XL-L055**
60 0/–0,007	120 0/–0,008	20 0/–0,15	1,1	**BSB060120-T**
0/–0,007	120 0/–0,008	20 0/–0,15	1,1	**BSB60120-SU-XL**
0/–0,007	120 0/–0,008	20 0/–0,15	1,1	**BSB60120-SU-XL-L055**

	Basic load ratings axial		Fatigue limit load	Limiting speed	Thermally safe operating speed	Bearing frictional torque[1]	Designation
d	dyn. C_a N	stat. C_{0a} N	C_{ua} N	n_G grease min^{-1}	n_ϑ min^{-1}	M_R Nm	
55	33 500	98 000	4 450	4 200	2 800	0,19	**BSB055090-T**
	42 000	132 000	6 000	3 900	2 200	0,25	**7602055-TVP**
	85 000	255 000	11 500	3 300	1 900	0,46	**7603055-TVP**[7]
	63 000	188 000	8 600	3 400	2 400	0,36	**BSB055120-T**[7]
	71 000	196 000	11 900	3 800	2 300	0,38	**BSB55120-SU-XL**
	71 000	196 000	11 900	3 800	2 300	0,38	**BSB55120-SU-XL-L055**
60	64 000	196 000	8 900	3 800	2 300	0,38	**BSB060120-T**
	71 000	196 000	11 900	3 800	2 300	0,38	**BSB60120-SU-XL**
	71 000	196 000	11 900	3 800	2 300	0,38	**BSB60120-SU-XL-L055**

medias *https://www.schaeffler.de/std/1F9A*

④ Only valid in assembled condition.

1) Valid for single bearings with stated preload force.

2) Valid for matched pair of bearings in O or X arrangement.

3) Based on rotating inner ring.

4) The recommended INA precision locknuts are not included in the scope of delivery and must be ordered separately.

5) The required axial locknut force must be observed when using other locknuts.

6) Only valid in conjunction with INA precision locknuts.
Observe the guidelines on locating/locating bearing arrangements TPI 123.

7) Delivery possibility by agreement.

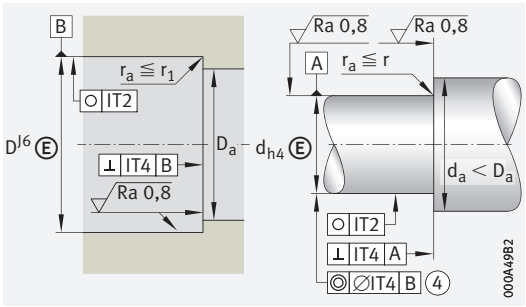

Design of housing and shaft (threaded spindle)

d	Dimensions			Mounting dimensions			
	r min.	r_1 min.	a ≈	D_a max.		d_a min.	
55	1	1	70,5	80	H12	65	h12
	1,5	1,5	77,5	85,5	H12	69,5	h12
	2	2	91,5	101	H12	77	h12
	2	2	86	97,5	H12	77	h12
	1,5	1,5	88	100,5	H12	79,5	h12
	1,5	1,5	88	100,5	H12	79,5	h12
60	1,5	1,5	88	100,5	H12	79,5	h12
	1,5	1,5	88	100,5	H12	79,5	h12
	1,5	1,5	88	100,5	H12	79,5	h12



d	Rigidity[2] axial c_{aL} N/µm	Axial runout[3] µm	Recommended INA precision locknuts[4] for radial clamping	for axial clamping	Tightening torque[6] M_A Nm	Required locknut force[5] axial N
55	1 246	3	ZM55	AM55	60	12 040
	1 394	3	ZM55	AM55	85	15 060
	1 723	3	ZM55	AM55	130	24 120
	1 553	3	ZM55	AM55	110	20 070
	1 623	2,5	ZM60	AM60	120	20 020
	1 623	2,5	ZM60	AM60	120	20 020
60	1 623	3	ZM60	AM60	120	20 020
	1 623	3	ZM60	AM60	120	20 020
	1 623	3	ZM60	AM60	120	20 020

Axial angular contact ball bearings

Single direction
Sealed on both sides

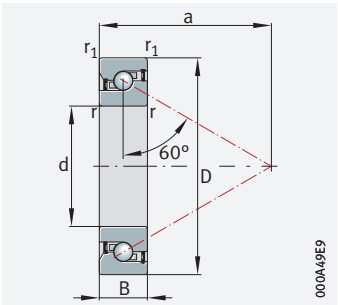

7602..-2RS, 7603..-2RS

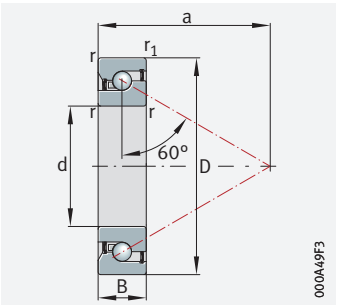

BSB..-2Z-SU-XL

d = 12 – 20 mm

Main dimensions				Mass	Designation
d	D		B	m	
				≈ kg	
12 0/–0,004	32 0/ –0,006		10 0/ –0,08	0,042	**7602012-2RS-TVP**
15 0/–0,004	35 0/ –0,006		11 0/ –0,08	0,052	**7602015-2RS-TVP**
0/–0,004	47 0/ –0,006		15 0/ –0,12	0,14	**BSB1547-2Z-SU-XL**
17 0/–0,004	47 0/ –0,006		15 0 –0,12	0,13	**BSB1747-2Z-SU-XL**
20 0/–0,005	47 0/ –0,006		14 0/ –0,12	0,12	**7602020-2RS-TVP**
0/–0,005	47 0/ –0,006		15 0/ –0,12	0,12	**BSB2047-2Z-SU-XL**
0/–0,005	52 0/ –0,007		15 0/ –0,12	0,17	**7603020-2RS-TVP**

	Basic load ratings axial		Fatigue limit load	Limiting speed	Thermally safe operating speed	Bearing frictional torque[1]	Designation
d	dyn. C_a	stat. C_{0a}	C_{ua}	n_G grease	n_ϑ	M_R	
	N	N	N	min^{-1}	min^{-1}	Nm	
12	12 200	20 700	940	10 400	8 000	0,015	**7602012-2RS-TVP**
15	13 100	24 700	1 120	9 000	6 700	0,02	**7602015-2RS-TVP**
	28 500	47 000	2 850	8 700	6 200	0,08	**BSB1547-2Z-SU-XL**
17	28 500	47 000	2 850	8 700	6 200	0,08	**BSB1747-2Z-SU-XL**
20	19 100	38 000	1 720	6 800	5 000	0,05	**7602020-2RS-TVP**
	28 500	47 000	2 850	8 700	6 200	0,08	**BSB2047-2Z-SU-XL**
	25 500	53 000	2 430	6 200	4 500	0,06	**7603020-2RS-TVP**

medias *https://www.schaeffler.de/std/1F9A*

④ Only valid in assembled condition.

1) Valid for single bearings with stated preload force.

2) Valid for matched pair of bearings in O or X arrangement.

3) Based on rotating inner ring.

4) The recommended INA precision locknuts are not included in the scope of delivery and must be ordered separately.

5) The required axial locknut force must be observed when using other locknuts.

6) Only valid in conjunction with INA precision locknuts.
Observe the guidelines on locating/locating bearing arrangements TPI 123.

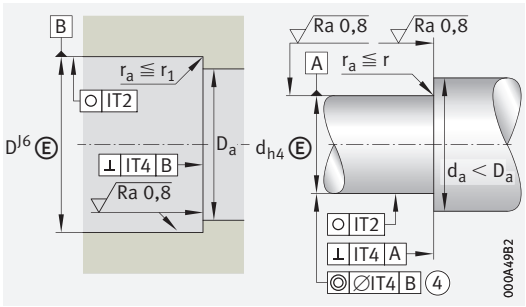

Design of housing and shaft (threaded spindle)

	Dimensions			Mounting dimensions			
d	r min.	r_1 min.	a ≈	D_a max.		d_a min.	
12	0,6	0,6	24	27	H12	17	h12
15	0,6	0,6	27,5	30	H12	20,5	h12
	1	0,6	29,9	43	H12	27	h12
17	1	0,6	29,9	43	H12	27	h12
20	1	1	36	39,5	H12	27,5	h12
	1	0,6	29,9	43	H12	27	h12
	1,1	1,1	36,5	43,5	H12	30,5	h12

	Rigidity[2]	Axial runout[3]	Recommended INA precision locknuts[4]			Required locknut force[5]
	axial		for radial clamping	for axial clamping	Tightening torque[6]	axial
d	c_{aL}				M_A	
	N/µm	µm			Nm	N
12	476	2	ZM12	–	8	6 110
15	516	2	ZM15	AM15	10	5 740
	764	2	ZM17	AM17	15	9 000
17	764	2	ZM17	AM17	15	9 000
20	703	2	ZM20	AM20	18	8 490
	764	2	ZM20	AM20	18	9 000
	787	2	ZM20	AM20	18	11 600

Axial angular contact ball bearings

Single direction
Sealed on both sides

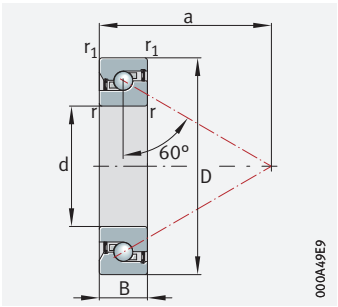

7602..-2RS, 7603..-2RS

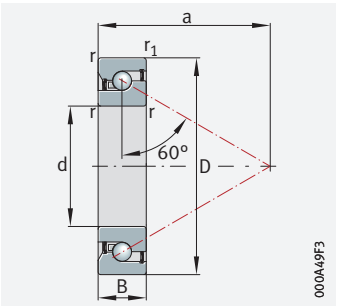

BSB..-2Z-SU-XL

d = 25 – 40 mm

Main dimensions				Mass	Designation
d		D	B	m	
				≈ kg	
25	0/–0,005	52 0/–0,007	15 0/–0,12	0,15	**7602025-2RS-TVP**
	0/–0,005	62 0/–0,007	17 0/–0,12	0,27	**7603025-2RS-TVP**
	0/–0,005	62 0/–0,007	15 0/–0,12	0,24	**BSB2562-2Z-SU-XL**
30	0/–0,005	62 0/–0,007	16 0/–0,12	0,23	**7602030-2RS-TVP**
	0/–0,005	62 0/–0,007	15 0/–0,12	0,22	**BSB3062-2Z-SU-XL**
35	0/–0,006	72 0/–0,007	15 0/–0,12	0,3	**BSB3572-2Z-SU-XL**
40	0/–0,006	72 0/–0,007	15 0/–0,12	0,26	**BSB4072-2Z-SU-XL**
	0/–0,006	90 0/–0,008	20 0/–0,12	0,65	**BSB4090-2Z-SU-XL**

	Basic load ratings		Fatigue limit load	Limiting speed	Thermally safe operating speed	Bearing frictional torque[1]	Designation
	axial						
d	dyn. C_a	stat. C_{0a}	C_{ua}	n_G grease	n_ϑ	M_R	
	N	N	N	min^{-1}	min^{-1}	Nm	
25	23 200	50 000	2 280	5 100	3 800	0,07	**7602025-2RS-TVP**
	29 500	68 000	3 100	5 100	3 800	0,09	**7603025-2RS-TVP**
	32 000	64 000	3 850	6 700	5 400	0,13	**BSB2562-2Z-SU-XL**
30	27 500	66 000	3 000	5 000	3 800	0,09	**7602030-2RS-TVP**
	32 000	64 000	3 850	6 700	5 400	0,13	**BSB3062-2Z-SU-XL**
35	40 500	89 000	5 400	5 400	4 700	0,18	**BSB3572-2Z-SU-XL**
40	40 500	89 000	5 400	5 400	4 700	0,18	**BSB4072-2Z-SU-XL**
	65 000	153 000	9 300	4 500	3 100	0,23	**BSB4090-2Z-SU-XL**

medias *https://www.schaeffler.de/std/1F9A*

④ Only valid in assembled condition.

1) Valid for single bearings with stated preload force.

2) Valid for matched pair of bearings in O or X arrangement.

3) Based on rotating inner ring.

4) The recommended INA precision locknuts are not included in the scope of delivery and must be ordered separately.

5) The required axial locknut force must be observed when using other locknuts.

6) Only valid in conjunction with INA precision locknuts.
Observe the guidelines on locating/locating bearing arrangements TPI 123.

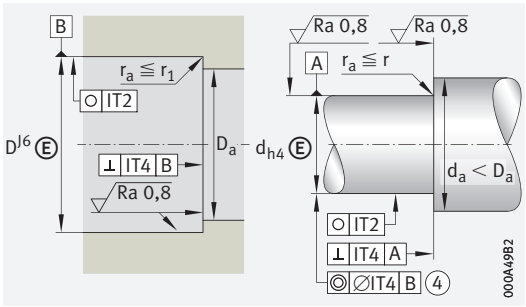

Design of housing and shaft (threaded spindle)

d	Dimensions			Mounting dimensions			
	r min.	r_1 min.	a ≈	D_a max.		d_a min.	
25	1	1	41	45	H12	32	h12
	1,1	1,1	47,5	52	H12	38	h12
	1	0,6	39,4	54	H12	38	h12
30	1	1	48	52,5	H12	39,5	h12
	1	0,6	39,4	54	H12	38	h12
35	1	0,6	48,5	65	H12	47	h12
40	1	0,6	48,5	65	H12	47	h12
	1,5	1,5	67	75,5	H12	56,5	h12

d	Rigidity[2] axial c_{aL} N/µm	Axial runout[3] µm	Recommended INA precision locknuts[4] for radial clamping	for axial clamping	Tightening torque[6] M_A Nm	Required locknut force[5] axial N
25	772	2	ZM25	AM25	25	9 430
	917	2	ZM25	AM25	40	14 480
	1 001	2	ZMA25/45	AM25	30	11 810
30	893	2	ZM30	AM30	32	10 240
	1 034	2,5	ZM30	AM30	32	11 080
35	1 196	2,5	ZM35	AM35	50	15 220
40	1 235	2,5	ZM40	AM40	60	15 650
	1 390	2,5	ZM40	AM40	110	26 080

Axial angular contact ball bearings

Single direction
Sealed on both sides

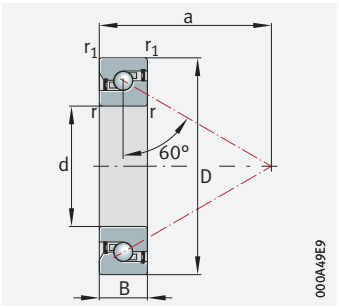

7602..-2RS, 7603..-2RS

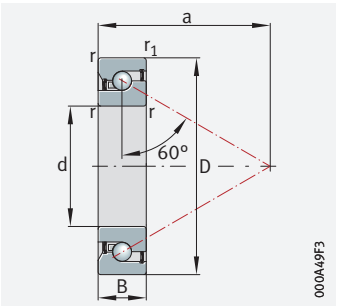

BSB..-2Z-SU-XL

d = 45 – 60 mm

Main dimensions			Mass	Designation
d	D	B	m ≈ kg	
45 0/–0,006	100 0/–0,008	20 0/–0,12	0,8	**BSB45100-2Z-SU-XL**
50 0/–0,006	100 0/–0,008	20 0/–0,12	0,75	**BSB50100-2Z-SU-XL**
55 0/–0,007	120 0/–0,008	20 0/–0,15	1,2	**BSB55120-2Z-SU-XL**
60 0/–0,007	120 0/–0,008	20 0/–0,15	1,1	**BSB60120-2Z-SU-XL**

	Basic load ratings axial		Fatigue limit load	Limiting speed	Thermally safe operating speed	Bearing frictional torque[1]	Designation
d	dyn. C_a	stat. C_{0a}	C_{ua}	n_G grease	n_ϑ	M_R	
	N	N	N	min^{-1}	min^{-1}	Nm	
45	68 000	172 000	10 400	4 000	2 700	0,33	**BSB45100-2Z-SU-XL**
50	68 000	172 000	10 400	4 000	2 700	0,33	**BSB50100-2Z-SU-XL**
55	71 000	196 000	11 900	3 800	2 300	0,38	**BSB55120-2Z-SU-XL**
60	71 000	196 000	11 900	3 800	2 300	0,38	**BSB60120-2Z-SU-XL**

medias *https://www.schaeffler.de/std/1F9A*

④ Only valid in assembled condition.

1) Valid for single bearings with stated preload force.

2) Valid for matched pair of bearings in O or X arrangement.

3) Based on rotating inner ring.

4) The recommended INA precision locknuts are not included in the scope of delivery and must be ordered separately.

5) The required axial locknut force must be observed when using other locknuts.

6) Only valid in conjunction with INA precision locknuts.
Observe the guidelines on locating/locating bearing arrangements TPI 123.

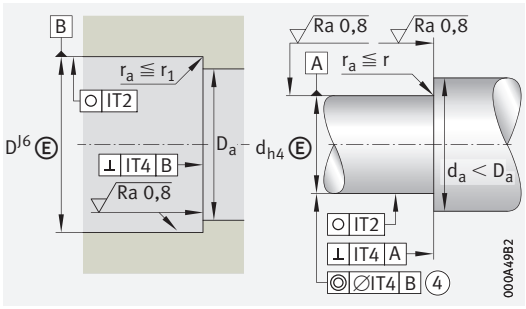

Design of housing and shaft (threaded spindle)

d	Dimensions			Mounting dimensions			
	r min.	r_1 min.	a ≈	D_a max.		d_a min.	
45	1,5	1,5	75	85,5	H12	64,5	h12
50	1,5	1,5	75	85,5	H12	64,5	h12
55	1,5	1,5	88	100,5	H12	79,5	h12
60	1,5	1,5	88	100,5	H12	79,5	h12

d	Rigidity[2]	Axial runout[3]	Recommended INA precision locknuts[4]			Required locknut force[5]
	axial		for radial clamping	for axial clamping	Tightening torque[6]	axial
	c_{aL}				M_A	
	N/µm	µm			Nm	N
45	1 473	2,5	ZM50	AM50	120	23 770
50	1 473	2,5	ZM50	AM50	120	23 770
55	1 623	2,5	ZM60	AM60	120	20 020
60	1 623	3	ZM60	AM60	120	20 020

Angular contact ball bearing units

For screw mounting

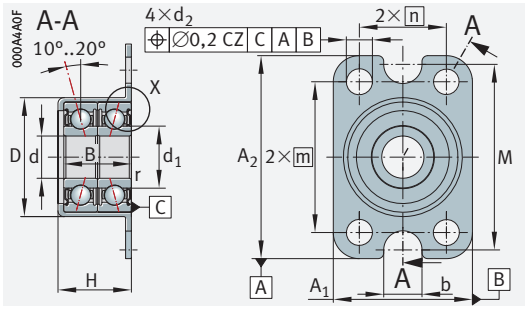

ZKLR0624-2Z, ZKLR0828-2Z

d = 6 – 20 mm

Main dimensions			Dimensions			Designation
d	D	B	d_1	r min.	d_2	
6 0/–0,008	20,5 +0,03/–0,01	12 +0,25/–0,25	9	0,3	4,5	**ZKLR0624-2Z**
8 0/–0,008	23,9 +0,03/–0,01	14 +0,25/–0,25	11	0,3	4,5	**ZKLR0828-2Z**
10 0/–0,008	28,14 +0,03/–0,01	16 +0,25/–0,25	13,55	0,3	4,5	**ZKLR1035-2Z**
12 0/–0,007	35,45 +0,03/–0,01	20 +0,25/–0,25	16,6	0,3	6,6	**ZKLR1244-2RS**
15 0/–0,007	38,45 +0,03/–0,01	22 +0,25/–0,25	18	0,3	6,6	**ZKLR1547-2RS**
20 0/–0,008	50,45 +0,03/–0,01	28 +0,25/–0,25	24,4	0,3	6,6	**ZKLR2060-2RS**

	Basic load ratings				Fatigue limit load	Limiting speed	Bearing frictional torque	Mass	Designation
	radial		axial						
d	dyn. C_r	stat. C_{0r}	dyn. C_a	stat. C_{0a}	C_{ur}	n_G grease	M_R	m	
	N	N	N	N	N	min^{-1}	Nm	≈ kg	
6	4 100	2 060	1 650	1 520	107	7 300	0,04	0,023	**ZKLR0624-2Z**
8	5 000	2 700	2 060	1 850	142	6 200	0,08	0,03	**ZKLR0828-2Z**
10	7 000	3 900	2 430	2 420	202	5 100	0,12	0,05	**ZKLR1035-2Z**
12	13 600	8 500	13 200	17 900	445	3 700	0,16	0,12	**ZKLR1244-2RS**
15	16 700	10 700	16 400	22 400	560	3 400	0,2	0,14	**ZKLR1547-2RS**
20	28 000	19 100	27 500	40 000	990	2 800	0,3	0,3	**ZKLR2060-2RS**

medias *https://www.schaeffler.de/std/1F9A*

② Adjacent construction, bearing screw mounted on flat surface. ④ Only valid in assembled condition.

1) The screws are not included in the scope of delivery.
Tightening torque according to manufacturer's data.

2) Statistically determined mean values from measurements on the complete bearing. Due to the design, larger variations in rigidity must be expected with axial angular contact ball bearing units ZKLR.

3) Based on rotating inner ring.

4) The locknut is only used to axially locate the bearing unit.
It has no influence on the bearing preload.

5) The recommended INA precision locknuts are not included in the scope of delivery and must be ordered separately.

6) Only valid in conjunction with INA precision locknuts.
Observe the guidelines on locating/locating bearing arrangements TPI 123.

7) The geometrical tolerances stated are only required in the area of the diameter between D_{ai} and D_{aa}.
When IT5-7 is stated, the tolerance should be selected as IT5 to IT7 depending on the accuracy requirement of the subassembly.

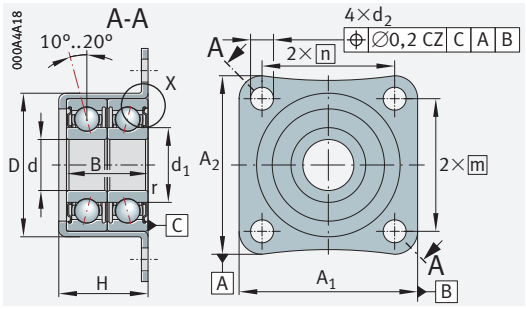

ZKLR1035-2Z

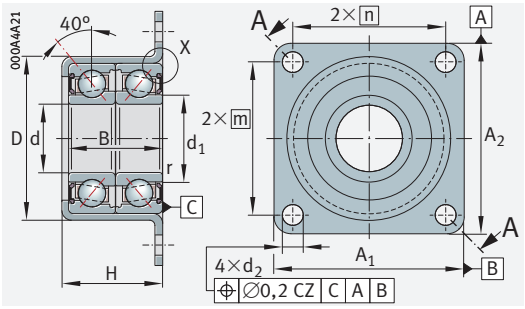

ZKLR1244-2RS, ZKLR1547-2RS, ZKLR2060-2RS

Dimensions									Mounting dimensions			Fixing screws[1] DIN EN ISO 4762				
d	A_1	A_2	b	m	n	M	H		d_a	D_{ai}	D_{aa} min.	Size	n	Size	n	t_1 o
6	24	35	6,6	26	15	32	13	0/–0,5	8	16	19	M4	4	M6	2	0,2
8	28	35	6,6	26	20	35	15,5	0/–0,5	10,4	18	22	M4	4	M6	2	0,2
10	35	35	–	26	26	–	17,5	0/–0,5	12,4	22	26	M4	4	–	–	0,2
12	44	50	–	38	32	–	22	0/–0,5	14	27	32	M6	4	–	–	0,2
15	47	51	–	39	35	–	24	0/–0,5	17,5	29	35	M6	4	–	–	0,2
20	60	60	–	47	47	–	30	0/–0,5	24	39	47	M6	4	–	–	0,2

	Rigidity[2] axial	Mass moment of inertia[3]	Axial runout[3]	Recommended INA precision locknuts[4] [5]		
				for radial clamping	for axial clamping	Tightening torque[6]
d	c_{aL}	M_m				M_A
	N/µm	kg · cm²	µm			Nm
6	14	0,0014	7	ZM06	–	2
8	16	0,0028	7	ZM08	–	4
10	19	0,0075	7	ZM10	–	6
12	170	0,0102	7	ZM12	–	8
15	200	0,0178	7	ZM15	AM15	10
20	250	0,263	8	ZM20	AM20	18

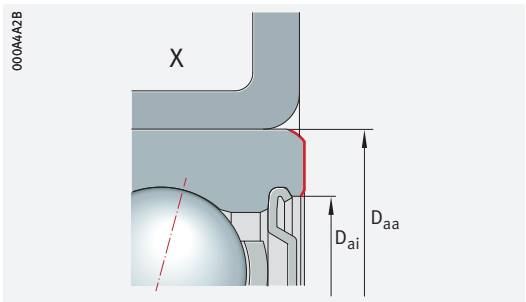

Axial abutment area of outer ring

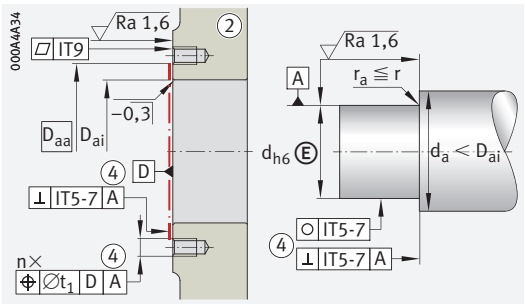

Design of housing and shaft[7]

Double row axial angular contact ball bearings with flange

With fixing holes

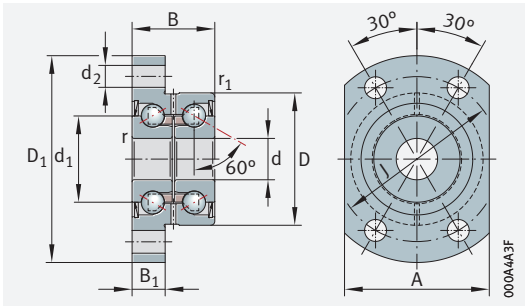

ZKLFA..-2RS, ZKLFA..-2Z

d = 6 – 8 mm

Main dimensions			Dimensions			Designation
d	D	B	d_1	D_1	r min.	
6 +0,002/–0,003	19 0/–0,01	12 0/–0,25	12	30	0,3	**ZKLFA0630-2Z**[2]
+0,002/–0,003	24 0/–0,01	15 0/–0,25	14	40	0,3	**ZKLFA0640-2RS**
+0,002/–0,003	24 0/–0,01	15 0/–0,25	14	40	0,3	**ZKLFA0640-2Z**
8 0 /–0,005	32 0/–0,01	20 0/–0,25	19	50	0,3	**ZKLFA0850-2RS**
0 /–0,005	32 0/–0,01	20 0/–0,25	19	50	0,3	**ZKLFA0850-2Z**

	Basic load ratings axial		Fatigue limit load	Limiting speed	Thermally safe operating speed	Bearing frictional torque	Mass	Designation
d	dyn. C_a N	stat. C_{0a} N	C_{ua} N	n_G grease min^{-1}	n_ϑ min^{-1}	M_R Nm	m ≈ kg	
6	4 900	6 100	280	22 800	14 000	0,01	0,05	**ZKLFA0630-2Z**[2]
	6 900	8 500	385	16 400	6 800	0,04	0,08	**ZKLFA0640-2RS**
	6 900	8 500	385	19 900	12 000	0,02	0,08	**ZKLFA0640-2Z**
8	12 500	16 300	740	12 100	5 100	0,08	0,17	**ZKLFA0850-2RS**
	12 500	16 300	740	15 500	9 500	0,04	0,17	**ZKLFA0850-2Z**

medias *https://www.schaeffler.de/std/1F9A*

② Adjacent construction, bearing screw mounted on flat surface ④ Only valid in assembled condition.

1) Screws 10.9 are not included in the scope of delivery.
Tightening torque according to manufacturer's data.

2) No relubrication facility.

3) Based on rotating inner ring.

4) The recommended INA precision locknuts are not included in the scope of delivery and must be ordered separately.

5) The required axial locknut force must be observed when using other locknuts.

6) Only valid in conjunction with INA precision locknuts.
Observe the guidelines on locating/locating bearing arrangements TPI 123.

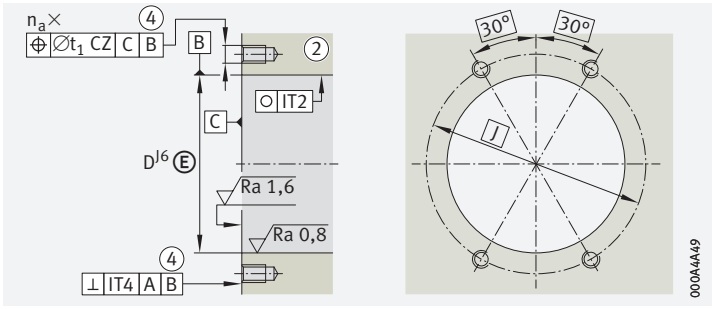

Housing design

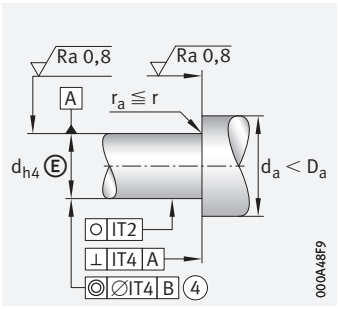

Shaft design (threaded spindle)

Dimensions						Mounting dimensions			Fixing screws[1] DIN EN ISO 4762	
d	r_1 min.	B_1	d_2	J	A	d_a min.	d_a max.	t_1	Size	n_a
6	0,3	5	3,5	24	22	9	15	0,1	M3	4
	0,6	6	4,5	32	27	9	18	0,1	M4	4
	0,6	6	4,5	32	27	9	18	0,1	M4	4
8	0,6	8	5,5	40	35	11	25	0,1	M5	4
	0,6	8	5,5	40	35	11	25	0,1	M5	4

	Rigidity axial	Tilting rigidity	Mass moment of inertia[3]	Axial runout[3]	Recommended INA precision locknuts[4]			Required locknut force[5]
					for radial clamping	for axial clamping	Tightening torque[6]	axial
d	c_{aL}	c_{kL}	M_m				M_A	
	N/µm	Nm/mrad	kg · cm²	µm			Nm	N
6	150	4	0,0019	2	ZM06	–	2	2 010
	200	8	0,0044	2	ZM06	–	2	2 404
	200	8	0,0044	2	ZM06	–	2	2 404
8	250	20	0,02	2	ZM08	–	4	3 468
	250	20	0,02	2	ZM08	–	4	3 468

Double row axial angular contact ball bearings with flange

With fixing holes

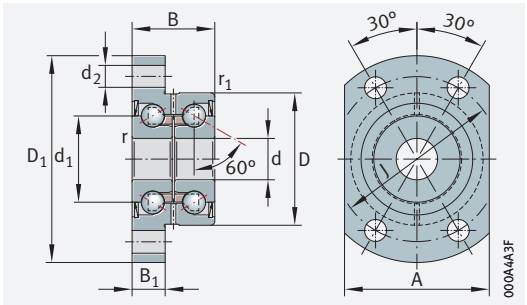

ZKLFA..-2RS, ZKLFA..-2Z

d = 10 – 15 mm

Main dimensions			Dimensions			Designation
d	D	B	d_1	D_1	r min.	
10 0/–0,005	32 0/–0,01	20 0/–0,25	21	50	0,3	**ZKLFA1050-2RS**
0/–0,005	32 0/–0,01	20 0/–0,25	21	50	0,3	**ZKLFA1050-2Z**
12 0/–0,005	42 0/–0,01	25 0/–0,25	25	63	0,3	**ZKLFA1263-2RS**
0/–0,005	42 0/–0,01	25 0/–0,25	25	63	0,3	**ZKLFA1263-2Z**
15 0/–0,005	42 0/–0,01	25 0/–0,25	28	63	0,3	**ZKLFA1563-2RS**
0/–0,005	42 0/–0,01	25 0/–0,25	28	63	0,3	**ZKLFA1563-2Z**

	Basic load ratings axial		Fatigue limit load	Limiting speed	Thermally safe operating speed	Bearing frictional torque	Mass	Designation
d	dyn. C_a N	stat. C_{0a} N	C_{ua} N	n_G grease min^{-1}	n_ϑ min^{-1}	M_R Nm	m ≈ kg	
10	13 400	18 800	850	10 900	4 600	0,12	0,18	**ZKLFA1050-2RS**
	13 400	18 800	850	14 400	8 600	0,06	0,18	**ZKLFA1050-2Z**
12	16 900	24 700	1 130	9 200	3 800	0,16	0,3	**ZKLFA1263-2RS**
	16 900	24 700	1 130	12 000	7 600	0,08	0,3	**ZKLFA1263-2Z**
15	17 900	28 000	1 280	8 200	3 500	0,2	0,31	**ZKLFA1563-2RS**
	17 900	28 000	1 280	10 800	7 000	0,1	0,31	**ZKLFA1563-2Z**

medias *https://www.schaeffler.de/std/1F9A*

② Adjacent construction, bearing screw mounted on flat surface ④ Only valid in assembled condition.

1) Screws 10.9 are not included in the scope of delivery. Tightening torque according to manufacturer's data.

2) Based on rotating inner ring.

3) The recommended INA precision locknuts are not included in the scope of delivery and must be ordered separately.

4) The required axial locknut force must be observed when using other locknuts.

5) Only valid in conjunction with INA precision locknuts. Observe the guidelines on locating/locating bearing arrangements TPI 123.

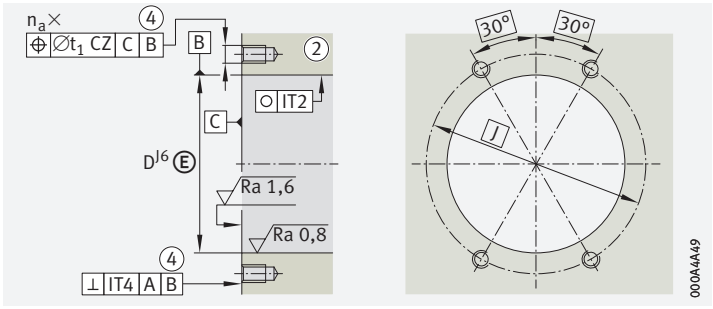

Housing design

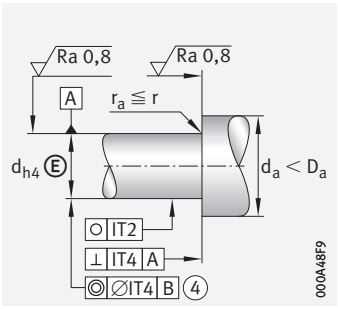

Shaft design (threaded spindle)

Dimensions						Mounting dimensions			Fixing screws[1] DIN EN ISO 4762	
d	r_1 min.	B_1	d_2	J	A	d_a min.	d_a max.	t_1	Size	n_a
10	0,6	8	5,5	40	35	14	27	0,1	M5	4
	0,6	8	5,5	40	35	14	27	0,1	M5	4
12	0,6	10	6,8	53	45	16	31	0,1	M6	4
	0,6	10	6,8	53	45	16	31	0,1	M6	4
15	0,6	10	6,8	53	45	20	34	0,1	M6	4
	0,6	10	6,8	53	45	20	34	0,1	M6	4

	Rigidity axial	Tilting rigidity	Mass moment of inertia[2]	Axial runout[2]	Recommended INA precision locknuts[3]			Required locknut force[4]
					for radial clamping	for axial clamping	Tightening torque[5]	axial
d	c_{aL}	c_{kL}	M_m				M_A	
	N/µm	Nm/mrad	kg · cm^2	µm			Nm	N
10	325	25	0,029	2	ZM10	–	6	4 891
	325	25	0,029	2	ZM10	–	6	4 891
12	375	50	0,068	2	ZM12	–	8	5 307
	375	50	0,068	2	ZM12	–	8	5 307
15	400	65	0,102	2	ZM15	AM15	10	5 484
	400	65	0,102	2	ZM15	AM15	10	5 484

Triple row axial angular contact ball bearings with flange

With fixing holes

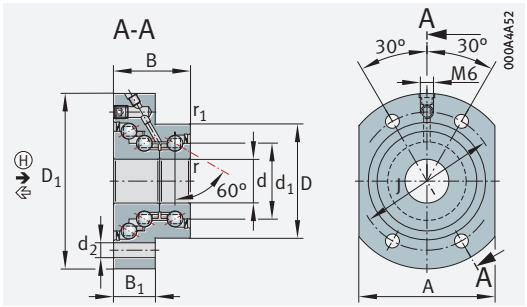

DKLFA..-2RS (d ≦ 20 mm)

d = 15 – 25 mm

Main dimensions			Dimensions			Designation
d	D	B	d_1	D_1 min.	r min.	
15 0/–0,010	45 0/–0,013	32 0/–0,25	28	75	0,3	**DKLFA1575-2RS**
20 0/–0,010	52 0/–0,013	35 0/–0,25	34,5	80	0,3	**DKLFA2080-2RS**
25 0/–0,010	57 0/–0,013	38 0/–0,25	40,5	90	0,3	**DKLFA2590-2RS**

	Basic load ratings				Fatigue limit load		Limiting speed	Thermally safe operating speed	Bearing frictional torque	Mass	Designation
	axial ⇦		axial Ⓗ ➔								
d	dyn. C_a	stat. C_{0a}	dyn. C_a	stat. C_{0a}	C_{ua}	C_{ua} Ⓗ	n_G grease	n_ϑ	M_R	m	
	N	N	N	N	N	N	min^{-1}	min^{-1}	Nm	≈ kg	
15	17 900	28 000	37 000	83 000	1 240	2 450	5 700	2 600	0,35	0,53	**DKLFA1575-2RS**
20	26 000	47 000	44 500	110 000	2 070	2 800	5 000	2 200	0,45	0,7	**DKLFA2080-2RS**
25	27 500	55 000	53 000	144 000	2 450	3 950	4 400	2 000	0,6	0,9	**DKLFA2590-2RS**

medias *https://www.schaeffler.de/std/1F9A*

Attention!
The bearings require continuous load in the main load direction Ⓗ!

④ Only valid in assembled condition. ⑤ Adjacent construction, bearing screw mounted on flat surface.
⑥ Bearing centred in adjacent construction.

1) Screws 10.9 not included in scope of delivery. Tightening torque according to manufacturer's data.

2) Based on rotating inner ring.

3) The recommended INA precision locknuts are not included in the scope of delivery and must be ordered separately.

4) The required axial locknut force must be observed when using other locknuts.

5) Only valid in conjunction with INA precision locknuts in locating/non-locating bearing arrangements and for ① in locating/locating bearing arrangements.
Observe the guidelines on locating/locating bearing arrangements TPI 123.

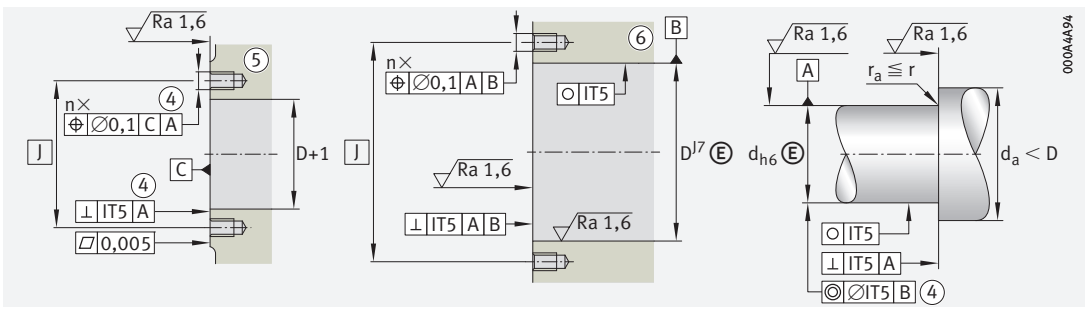

Design of housing and shaft (threaded spindle)

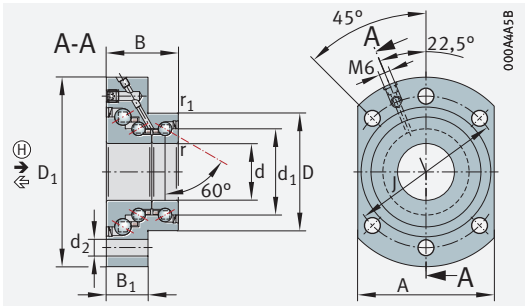

DKLFA..-2RS (d ≧ 25 mm)

Dimensions						Mounting dimensions		Fixing screws[1] DIN EN ISO 4762		
d	r_1 min.	B_1	d_2	J	A	d_a min.	d_a max.	Size	n	t °
15	0,6	18	6,8	58	55	20	35	M6	4	60
20	0,6	19	6,8	63	62	25	43	M6	4	60
25	0,6	22	8,8	75	70	32	48	M8	6	45

	Rigidity		Tilting rigidity	Mass moment of inertia[2]	Axial runout[2]	Recommended INA precision locknuts[3]				Required locknut force[4]
	axial ⇦	axial ➔				for radial clamping		for axial clamping	Tightening torque[5]	axial
d	c_{aL}	c_{aL}	c_{kL}	M_m		①, ②	③	①, ②	M_A ①	①
	N/µm	N/µm	Nm/mrad	kg · cm²	µm				Nm	N
15	500	950	140	0,278	5	ZMA15/33	ZM17	AM15	10	6 270
20	750	1 100	260	0,553	5	ZMA20/38	ZM25	AM20	18	8 580
25	850	1 200	370	1,12	5	ZMA25/45	ZM30	AM25	25	9 670

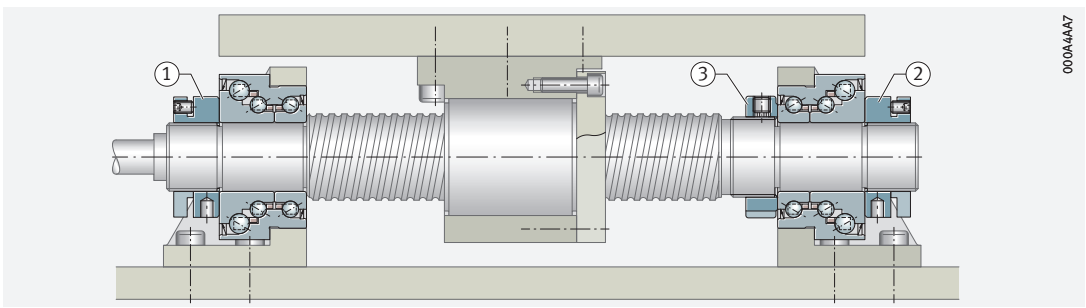

Ball screw drive with locating bearing arrangement on both sides

Triple row angular contact ball bearings with flange

With fixing holes

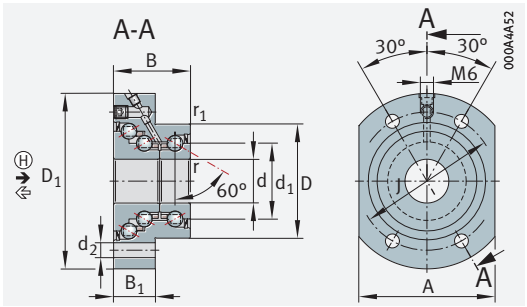

DKLFA..-2RS (d ≦ 20 mm)

d = 30 – 40 mm

Main dimensions				Dimensions			Designation
d	D	B		d_1	D_1 min.	r min.	
30 0/–0,010	62 0/–0,013	38 0/–0,25		45,5	100	0,3	**DKLFA30100-2RS**
0/–0,010	75 0/–0,013	56 0/–0,25		51	110	0,3	**DKLFA30110-2RS**[2]
40 0/–0,010	72 0/–0,013	42 0/–0,25		58	115	0,3	**DKLFA40115-2RS**
0/–0,010	90 0/–0,013	60 0/–0,25		65	140	0,3	**DKLFA40140-2RS**[2]

	Basic load ratings				Fatigue limit load		Limiting speed	Thermally safe operating speed	Bearing frictional torque	Mass	Designation
	axial ⇦		axial Ⓗ ➔								
d	dyn. C_a N	stat. C_{0a} N	dyn. C_a N	stat. C_{0a} N	C_{ua} N	C_{ua} Ⓗ N	n_G grease min^{-1}	n_ϑ min^{-1}	M_R Nm	m ≈ kg	
30	29 000	64 000	56 000	165 000	2 800	4 450	4 000	1 800	0,75	1	**DKLFA30100-2RS**
	59 000	108 000	107 000	255 000	4 800	6 600	3 500	1 600	1,5	2,5	**DKLFA30110-2RS**[2]
40	43 000	101 000	73 000	227 000	4 450	5 600	3 200	1 500	1	1,5	**DKLFA40115-2RS**
	72 000	149 000	127 000	365 000	6 600	9 500	2 900	1 200	2,5	4,2	**DKLFA40140-2RS**[2]

medias *https://www.schaeffler.de/std/1F9A*

Attention!
The bearings require continuous load in the main load direction Ⓗ!

④ Only valid in assembled condition. ⑤ Adjacent construction, bearing screw mounted on flat surface.
⑥ Bearing centred in adjacent construction.

1) Screws 10.9 not included in scope of delivery. Tightening torque according to manufacturer's data.
2) Heavy series.
3) Based on rotating inner ring.

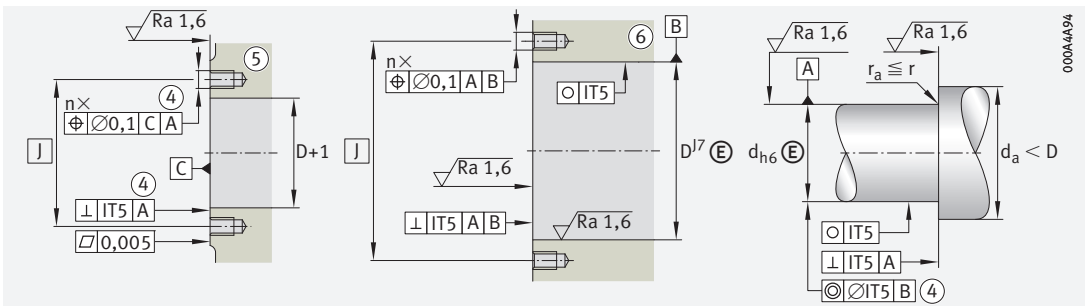

Design of housing and shaft (threaded spindle)

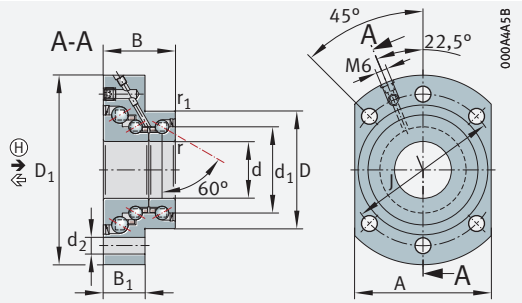

DKLFA..-2RS (d ≧ 25 mm)

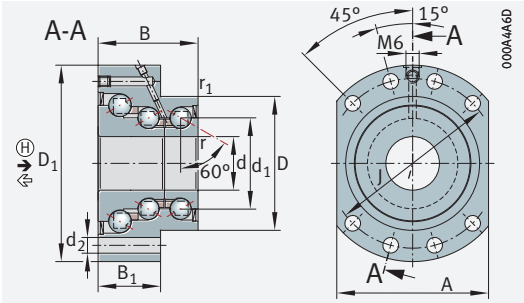

DKLFA..-2RS
Heavy series

Dimensions						Mounting dimensions		Fixing screws[1] DIN EN ISO 4762		
d	r_1 min.	B_1	d_2	J	A	d_a min.	d_a max.	Size	n	t °
30	0,6	22	8,8	80	72	40	53	M8	6	45
	0,6	35	8,8	95	85	47	64	M8	8	30
40	0,6	23	8,8	94	90	50	67	M8	6	45
	0,6	35	11	118	110	56	80	M10	8	30

	Rigidity		Tilting rigidity	Mass moment of inertia[3]	Axial runout[3]	Recommended INA precision locknuts[4]				Required locknut force[5]
	axial ⇦	axial ➔				for radial clamping		for axial clamping	Tightening torque[6]	axial
d	c_{aL}	c_{aL}	c_{kL}	M_m		①, ②	③	①, ②	M_A ①	①
	N/µm	N/µm	Nm/mrad	kg · cm²	µm				Nm	N
30	900	1 400	500	1,7	5	ZMA30/52	ZM35	AM30	32	10 350
	1 300	1 600	650	3,23	5	–	ZM35	AM30/65	65	20 500
40	1 100	1 700	1 000	4,23	5	ZMA40/62	ZM45	AM40	55	13 420
	1 800	2 000	1 370	9,32	5	–	ZM45	AM40/85	110	26 600

4) The recommended INA precision locknuts are not included in the scope of delivery and must be ordered separately.

5) The required axial locknut force must be observed when using other locknuts.

6) Only valid in conjunction with INA precision locknuts in locating/non-locating bearing arrangements and for ① in locating/locating bearing arrangements.
Observe the guidelines on locating/locating bearing arrangements TPI 123.

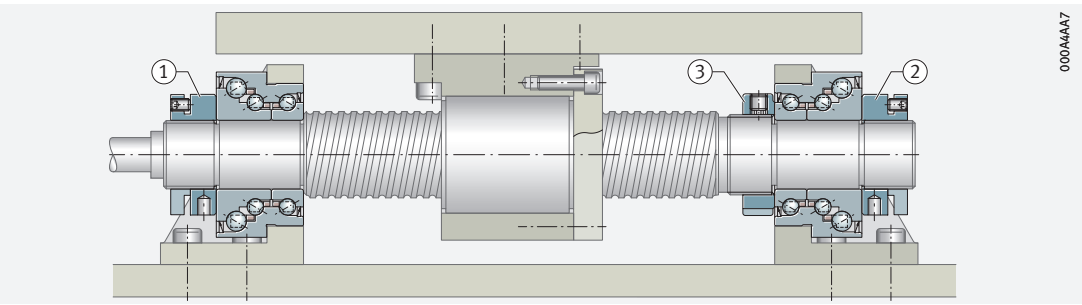

Ball screw drive with locating bearing arrangement on both sides

Needle roller/axial cylindrical roller bearings

Light series
With fixing holes

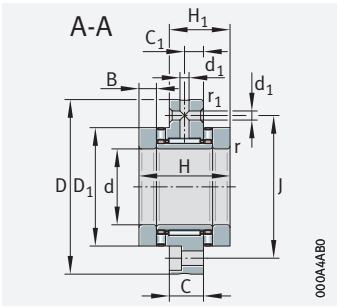

ZARF

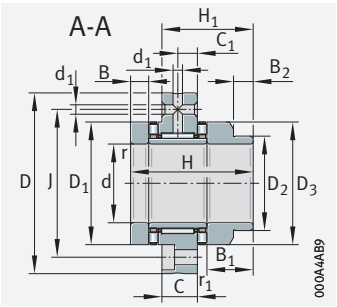

ZARF..-L

d = 15 – 30 mm

Main dimensions			Basic load ratings				Fatigue limit load		Limiting speeds		Bearing frictional torque	Mass	Designation
			axial		radial								
d	D	H	dyn. C_a	stat. C_{0a}	dyn. C_r	stat. C_{0r}	C_{ua}	C_{ur}	n_G oil	n_G grease	M_R	m	
			N	N	N	N	N	N	min^{-1}	min^{-1}	Nm	≈ kg	
15	60	40	24 900	53 000	13 000	17 500	7 500	2 650	8 500	2 200	0,35	0,42	**ZARF1560-TV**
	60	53	24 900	53 000	13 000	17 500	7 500	2 650	8 500	2 200	0,35	0,45	**ZARF1560-L-TV**
17	62	43	26 000	57 000	14 000	19 900	8 000	3 000	7 800	2 100	0,4	0,49	**ZARF1762-TV**
	62	57	26 000	57 000	14 000	19 900	8 000	3 000	7 800	2 100	0,4	0,52	**ZARF1762-L-TV**
20	68	46	33 500	76 000	14 900	22 400	6 400	3 400	7 000	2 000	0,5	0,56	**ZARF2068-TV**
	68	60	33 500	76 000	14 900	22 400	6 400	3 400	7 000	2 000	0,5	0,61	**ZARF2068-L-TV**
25	75	50	35 500	86 000	22 600	36 000	7 300	5 200	6 000	1 900	0,55	0,78	**ZARF2575-TV**
	75	65	35 500	86 000	22 600	36 000	7 300	5 200	6 000	1 900	0,55	0,84	**ZARF2575-L-TV**
30	80	50	39 000	101 000	24 300	41 500	8 500	6 000	5 500	1 800	0,65	0,85	**ZARF3080-TV**
	80	65	39 000	101 000	24 300	41 500	8 500	6 000	5 500	1 800	0,65	0,9	**ZARF3080-L-TV**

medias *https://www.schaeffler.de/std/1F9A*

① Mounting dimension for seal carrier assembly DRS TPI 123.
③ Adjacent construction, bearing screw mounted in bore. ④ Only valid in assembled condition.

1) If rotary shaft seals are used, the outside diameter of the sealing ring must be taken into consideration.

2) Based on rotating inner ring.

3) The recommended INA precision locknuts are not included in the scope of delivery and must be ordered separately.

4) The required axial locknut force must be observed when using other locknuts.

5) Screws not included in scope of delivery. Tightening torque according to manufacturer's data.

6) Only valid in conjunction with INA precision locknuts.
Observe the guidelines on locating/locating bearing arrangements TPI 123.

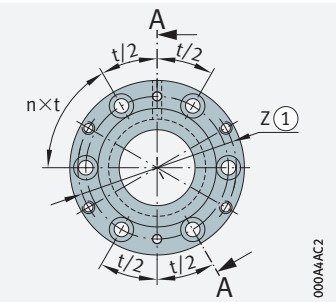

Hole pattern
ZARF1560, ZARF1762

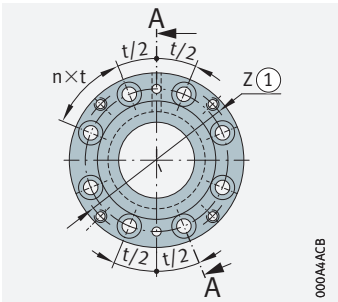

Hole pattern
ZARF2068, ZARF2575

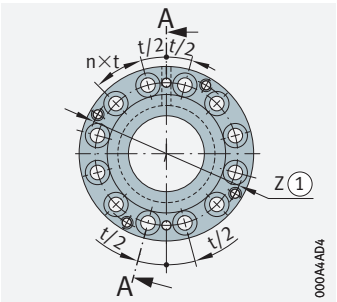

Hole pattern
ZARF3080

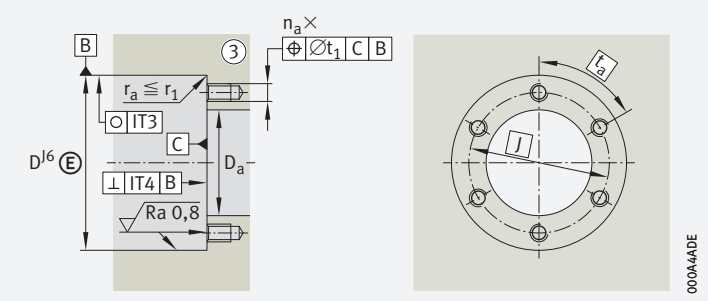

Housing design

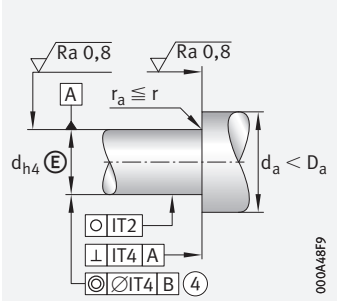

Shaft design (threaded spindle)

Dimensions														Pitch		Mounting dimensions[1]			Mass moment of inertia[2]
d	H_1	C	C_1	D_1	D_2	D_3	B	B_1	B_2	r	r_1	d_1	J	n	t	D_a	d_a	t_1	M_m
										min.	min.				°	max.	min.		kg · cm²
15	26	14	8	35	–	–	7,5	–	–	0,3	0,6	3,2	46	6	60	36	28	0,1	0,24
	39	14	8	35	24	34	7,5	20,5	11	0,3	0,6	3,2	46	6	60	36	22	0,1	0,274
17	27,5	14	8	38	–	–	9	–	–	0,3	0,6	3,2	48	6	60	39	28	0,1	0,373
	41,5	14	8	38	28	38	9	23	11	0,3	0,6	3,2	48	6	60	39	26	0,1	0,464
20	29	14	8	42	–	–	10	–	–	0,3	0,6	3,2	53	8	45	43	33	0,1	0,615
	43	14	8	42	30	40	10	24	12	0,3	0,6	3,2	53	8	45	43	28	0,1	0,683
25	33	18	10	47	–	–	10	–	–	0,3	0,6	3,2	58	8	45	48	39	0,1	0,989
	48	18	10	47	36	45	10	25	12	0,3	0,6	3,2	58	8	45	48	34	0,1	1,15
30	33	18	10	52	–	–	10	–	–	0,3	0,6	3,2	63	12	30	53	44	0,1	1,46
	48	18	10	52	40	50	10	25	13	0,3	0,6	3,2	63	12	30	53	38	0,1	1,7

	Rigidity	Tilting rigidity	Axial runout[2]	Recommended INA precision locknuts[3]			Required locknut force[4]	Rotary shaft seal to DIN 3760; to be ordered separately	Fixing screws[5] DIN EN ISO 4762		
	axial			for radial clamping	for axial clamping	Tightening torque[6]	axial				
d	c_{aL}	c_{kL}				M_A			Size	n_a	t_a
	N/µm	Nm/mrad	µm			Nm	N				°
15	1 400	110	1	ZMA15/33	AM15	10	6 506	–	M6	6	60
	1 400	110	1	ZMA15/33	AM15	10	6 506	24×35×7	M6	6	60
17	1 600	160	1	ZM17	AM17	12	7 078	–	M6	6	60
	1 600	160	1	ZM17	AM17	12	7 078	28×40×7	M6	6	60
20	1 800	230	1	ZMA20/38	AM20	18	8 972	–	M6	8	45
	1 800	230	1	ZMA20/38	AM20	18	8 972	30×42×7	M6	8	45
25	1 900	350	1	ZMA25/45	AM25	25	9 745	–	M6	8	45
	1 900	350	1	ZMA25/45	AM25	25	9 745	36×47×7	M6	8	45
30	2 200	520	1	ZMA30/52	AM30	32	10 662	–	M6	12	30
	2 200	520	1	ZMA30/52	AM30	32	10 662	40×52×7	M6	12	30

Needle roller/axial cylindrical roller bearings

Light series
With fixing holes

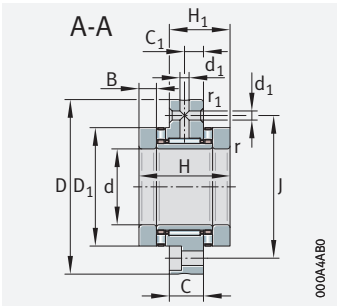

ZARF

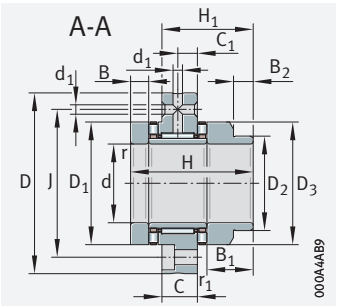

ZARF..-L

d = 35 – 50 mm

Main dimensions			Basic load ratings				Fatigue limit load		Limiting speeds		Bearing frictional torque	Mass	Designation
			axial		radial								
d	D	H	dyn. C_a	stat. C_{0a}	dyn. C_r	stat. C_{0r}	C_{ua}	C_{ur}	n_G oil	n_G grease	M_R	m	
			N	N	N	N	N	N	min^{-1}	min^{-1}	Nm	≈ kg	
35	90	54	56 000	148 000	26 000	47 000	12 900	6 800	4 800	1 700	0,9	1,12	**ZARF3590-TV**
	90	70	56 000	148 000	26 000	47 000	12 900	6 800	4 800	1 700	0,9	1,25	**ZARF3590-L-TV**
40	100	54	59 000	163 000	27 500	53 000	14 200	7 600	4 400	1 600	1	1,35	**ZARF40100-TV**
	100	70	59 000	163 000	27 500	53 000	14 200	7 600	4 400	1 600	1	1,45	**ZARF40100-L-TV**
45	105	60	61 000	177 000	38 000	74 000	15 500	10 400	4 000	1 500	1,2	1,7	**ZARF45105-TV**
	105	75	61 000	177 000	38 000	74 000	15 500	10 400	4 000	1 500	1,2	1,85	**ZARF45105-L-TV**
50	115	60	90 000	300 000	40 000	82 000	28 000	11 500	3 600	1 200	2,2	2,1	**ZARF50115-TV**
	115	78	90 000	300 000	40 000	82 000	28 000	11 500	3 600	1 200	2,2	2,45	**ZARF50115-L-TV**

medias *https://www.schaeffler.de/std/1F9A*

① Mounting dimension for seal carrier assembly DRS TPI 123.
③ Adjacent construction, bearing screw mounted in bore. ④ Only valid in assembled condition.

1) If rotary shaft seals are used, the outside diameter of the sealing ring must be taken into consideration.

2) Based on rotating inner ring.

3) The recommended INA precision locknuts are not included in the scope of delivery and must be ordered separately.

4) The required axial locknut force must be observed when using other locknuts.

5) Screws 10.9 not included in scope of delivery. Tightening torque according to manufacturer's data.

6) Only valid in conjunction with INA precision locknuts.
Observe the guidelines on locating/locating bearing arrangements TPI 123.

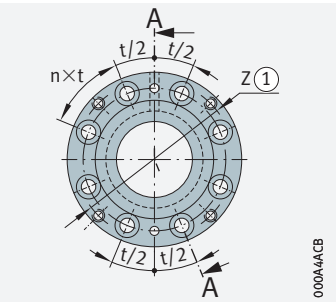

Hole pattern
ZARF40100, ZARF45105

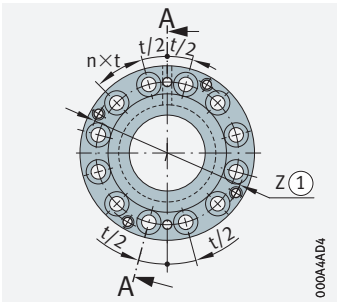

Hole pattern
ZARF3590, ZARF50115

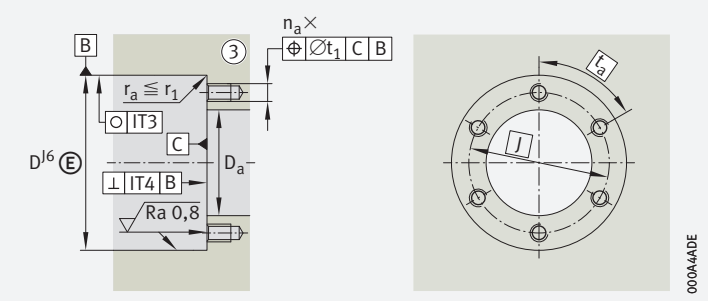

Housing design

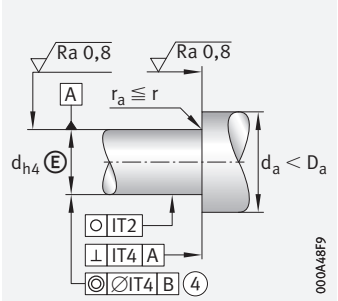

Shaft design (threaded spindle)

Dimensions														Pitch		Mounting dimensions[1]			Mass moment of inertia[2]
d	H_1	C	C_1	D_1	D_2	D_3	B	B_1	B_2	r	r_1	d_1	J	n	t	D_a	d_a	t_1	M_m
										min.	min.				°	max.	min.		kg · cm^2
35	35	18	10	60	–	–	11	–	–	0,3	0,6	3,2	73	12	30	61	50	0,1	2,8
	51	18	10	60	45	58	11	27	13	0,3	0,6	3,2	73	12	30	61	43	0,1	3,21
40	35	18	10	65	–	–	11	–	–	0,3	0,6	3,2	80	8	45	66	55	0,2	3,78
	51	18	10	65	50	63	11	27	14	0,3	0,6	3,2	80	8	45	66	48	0,2	4,35
45	40	22,5	12,5	70	–	–	11,5	–	–	0,3	0,6	6	85	8	45	71	60	0,2	5,33
	55	22,5	12,5	70	56	68	11,5	26,5	13	0,3	0,6	6	85	8	45	71	54	0,2	6,03
50	40	22,5	12,5	78	–	–	11,5	–	–	0,3	0,6	6	94	12	30	79	67	0,2	8,42
	58	22,5	12,5	78	60	78	11,5	29,5	14	0,3	0,6	6	94	12	30	79	58	0,2	10,46

	Rigidity	Tilting rigidity	Axial runout[2]	Recommended INA precision locknuts[3]			Required locknut force[4]	Rotary shaft seal to DIN 3760; to be ordered separately	Fixing screws[5] DIN EN ISO 4762		
	axial			for radial clamping	for axial clamping	Tightening torque[6]	axial				
d	c_{aL}	c_{kL}				M_A			Size	n_a	t_a
	N/µm	Nm/mrad	µm			Nm	N				°
35	2 600	740	1	ZMA35/58	AM35/58	40	12 143	–	M6	12	30
	2 600	740	1	ZMA35/58	AM35/58	40	12 143	45×60×8	M6	12	30
40	2 800	1 030	1	ZMA40/62	AM40	55	14 240	–	M8	8	45
	2 800	1 030	1	ZMA40/62	AM40	55	14 240	50×65×8	M8	8	45
45	3 000	1 340	1	ZMA45/68	AM45	65	15 112	–	M8	8	45
	3 000	1 340	1	ZMA45/68	AM45	65	15 112	56×70×8	M8	8	45
50	4 800	2 470	1	ZMA50/75	AM50	85	18 410	–	M8	12	30
	4 800	2 470	1	ZMA50/75	AM50	85	18 410	60×80×8	M8	12	30

Needle roller/axial cylindrical roller bearings

Heavy series
With fixing holes

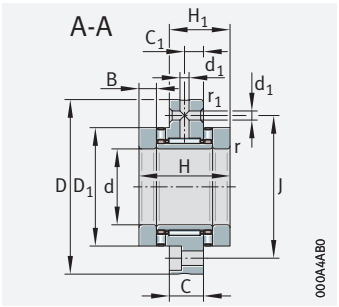

ZARF

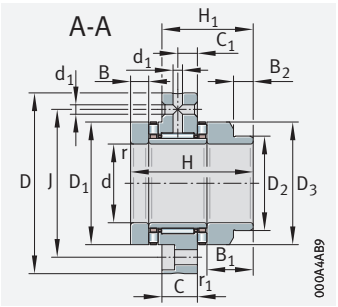

ZARF..-L

d = 20 – 45 mm

Main dimensions			Basic load ratings				Fatigue limit load		Limiting speeds		Bearing frictional torque	Mass	Designation
			axial		radial								
d	D	H	dyn. C_a	stat. C_{0a}	dyn. C_r	stat. C_{0r}	C_{ua}	C_{ur}	n_G oil	n_G grease	M_R	m	
			N	N	N	N	N	N	min^{-1}	min^{-1}	Nm	≈ kg	
20	80	60	64 000	141 000	22 600	36 000	13 100	5 200	6 000	1 500	1,3	1,1	**ZARF2080-TV**
	80	75	64 000	141 000	22 600	36 000	13 100	5 200	6 000	1 500	1,3	1,22	**ZARF2080-L-TV**
25	90	60	80 000	199 000	24 300	41 500	18 600	6 000	4 900	1 400	1,6	1,6	**ZARF2590-TV**
	90	75	80 000	199 000	24 300	41 500	18 600	6 000	4 900	1 400	1,6	1,75	**ZARF2590-L-TV**
30	105	66	107 000	265 000	26 000	47 000	22 900	6 800	4 400	1 300	2,1	1,95	**ZARF30105-TV**
	105	82	107 000	265 000	26 000	47 000	22 900	6 800	4 400	1 300	2,1	2,15	**ZARF30105-L-TV**
35	110	66	105 000	265 000	27 500	53 000	22 900	7 600	4 000	1 250	2,3	1,6	**ZARF35110-TV**
	110	82	105 000	265 000	27 500	53 000	22 900	7 600	4 000	1 250	2,3	1,85	**ZARF35110-L-TV**
40	115	75	117 000	315 000	38 000	74 000	27 000	10 400	3 700	1 200	2,5	2,7	**ZARF40115-TV**
	115	93	117 000	315 000	38 000	74 000	27 000	10 400	3 700	1 200	2,5	3	**ZARF40115-L-TV**
45	130	82	154 000	405 000	40 000	82 000	37 500	11 500	3 300	1 150	3,5	3,9	**ZARF45130-TV**
	130	103	154 000	405 000	40 000	82 000	37 500	11 500	3 300	1 150	3,5	4,3	**ZARF45130-L-TV**

medias *https://www.schaeffler.de/std/1F9A*

① Mounting dimension for seal carrier assembly DRS TPI 123.
③ Adjacent construction, bearing screw mounted in bore. ④ Only valid in assembled condition.

1) If rotary shaft seals are used, the outside diameter of the sealing ring must be taken into consideration.

2) Based on rotating inner ring.

3) The recommended INA precision locknuts are not included in the scope of delivery and must be ordered separately.

4) The required axial locknut force must be observed when using other locknuts.

5) Screws not included in scope of delivery. Tightening torque according to manufacturer's data.

6) Only valid in conjunction with INA precision locknuts.
Observe the guidelines on locating/locating bearing arrangements TPI 123.

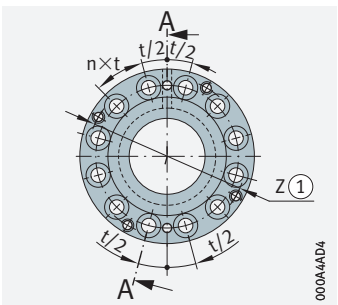

Hole pattern

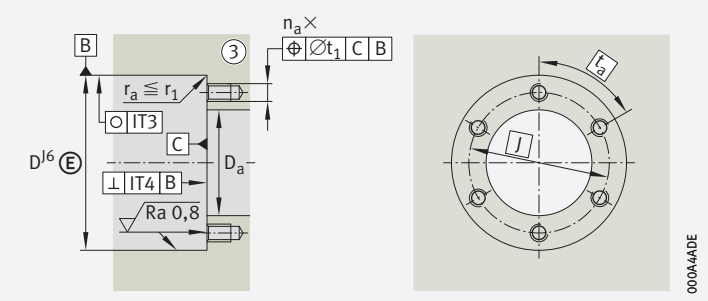

Housing design

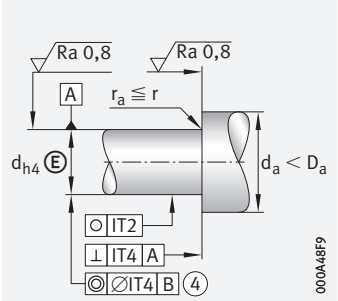

Shaft design (threaded spindle)

Dimensions														Pitch		Mounting dimensions[1]			Mass moment of inertia[2]
d	H_1	C	C_1	D_1	D_2	D_3	B	B_1	B_2	r	r_1	d_1	J	n	t	D_a	d_a	t_1	M_m
										min.	min.				°	max.	min.		kg · cm²
20	38	18	10	52	–	–	12,5	–	–	0,3	0,6	3,2	63	12	30	53	38	0,1	1,98
	53	18	10	52	40	50	12,5	27,5	13	0,3	0,6	3,2	63	12	30	53	38	0,1	2,27
25	38	18	10	62	–	–	12,5	–	–	0,3	0,6	3,2	73	12	30	63	45	0,1	3,88
	53	18	10	62	48	60	12,5	27,5	13	0,3	0,6	3,2	73	12	30	63	45	0,1	4,51
30	41	18	10	68	–	–	14	–	–	0,3	0,6	3,2	85	12	30	69	52	0,2	6,53
	57	18	10	68	52	66	14	30	13	0,3	0,6	3,2	85	12	30	69	50	0,2	7,43
35	41	18	10	73	–	–	14	–	–	0,3	0,6	3,2	88	12	30	74	60	0,2	8,47
	57	18	10	73	60	73	14	30	13	0,3	0,6	3,2	88	12	30	74	58	0,2	10,4
40	47,5	22,5	12,5	78	–	–	16	–	–	0,3	0,6	6	94	12	30	79	65	0,2	13,3
	65,5	22,5	12,5	78	60	78	16	34	14	0,3	0,6	6	94	12	30	79	58	0,2	15,5
45	51	22,5	12,5	90	–	–	17,5	–	–	0,3	0,6	6	105	12	30	91	70	0,2	23,7
	72	22,5	12,5	90	70	88	17,5	38,5	18	0,3	0,6	6	105	12	30	91	68	0,2	28,1

	Rigidity	Tilting rigidity	Axial runout[2]	Recommended INA precision locknuts[3]			Required locknut force[4]	Rotary shaft seal to DIN 3760; to be ordered separately	Fixing screws[5] DIN EN ISO 4762		
	axial			for radial clamping	for axial clamping	Tightening torque[6]	axial				
d	c_{aL}	c_{kL}				M_A			Size	n_a	t_a
	N/µm	Nm/mrad	µm			Nm	N				°
20	2 300	400	1	ZMA20/52	AM20	38	17 623	–	M6	12	30
	2 300	400	1	ZMA20/52	AM20	38	17 623	40×52×7	M6	12	30
25	3 000	800	1	ZMA25/58	AM25	55	20 790	–	M6	12	30
	3 000	800	1	ZMA25/58	AM25	55	20 790	48×62×8	M6	12	30
30	3 300	1 100	1	ZMA30/65	AM30	75	24 287	–	M8	12	30
	3 300	1 100	1	ZMA30/65	AM30	75	24 287	52×68×8	M8	12	30
35	3 500	1 300	1	ZMA35/70	AM35	100	27 480	–	M8	12	30
	3 500	1 300	1	ZMA35/70	AM35	100	27 480	60×75×8	M8	12	30
40	3 800	1 800	1	ZMA40/75	AM40	120	29 834	–	M8	12	30
	3 800	1 800	1	ZMA40/75	AM40	120	29 834	60×80×8	M8	12	30
45	4 000	2 100	1	ZMA45/85	AM45	150	33 549	–	M8	12	30
	4 000	2 100	1	ZMA45/85	AM45	150	33 549	70×90×10	M8	12	30

Needle roller/axial cylindrical roller bearings

Heavy series
With fixing holes

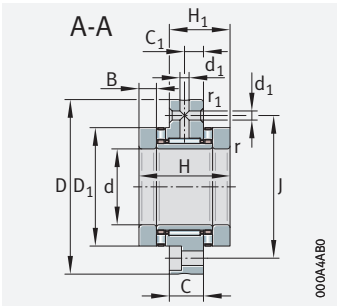

ZARF

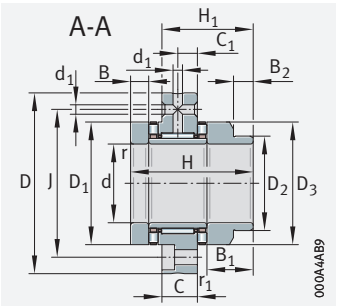

ZARF..-L

d = 50 – 65 mm

Main dimensions			Basic load ratings				Fatigue limit load		Limiting speeds		Bearing frictional torque	Mass	Designation
			axial		radial								
d	D	H	dyn. C_a	stat. C_{0a}	dyn. C_r	stat. C_{0r}	C_{ua}	C_{ur}	n_G oil	n_G grease	M_R	m	
			N	N	N	N	N	N	min^{-1}	min^{-1}	Nm	≈ kg	
50	140	82	172 000	480 000	41 500	88 000	44 500	12 700	3 100	1 100	3,8	4,2	**ZARF50140-TV**
	140	103	172 000	480 000	41 500	88 000	44 500	12 700	3 100	1 100	3,8	4,65	**ZARF50140-L-TV**
55	145	82	177 000	500 000	44 000	98 000	46 500	13 800	2 900	1 000	4	4,5	**ZARF55145-TV**
	145	103	177 000	500 000	44 000	98 000	46 500	13 800	2 900	1 000	4	5	**ZARF55145-L-TV**
60	150	82	187 000	550 000	44 500	92 000	51 000	12 900	2 700	950	4,2	4,7	**ZARF60150-TV**
	150	103	187 000	550 000	44 500	92 000	51 000	12 900	2 700	950	4,2	5,35	**ZARF60150-L-TV**
65	155	82	172 000	500 000	54 000	104 000	46 500	14 900	2 600	900	4	5,1	**ZARF65155-TV**
	155	103	172 000	500 000	54 000	104 000	46 500	14 900	2 600	900	4	5,7	**ZARF65155-L-TV**

medias *https://www.schaeffler.de/std/1F9A*

① Mounting dimension for seal carrier assembly DRS TPI 123.
③ Adjacent construction, bearing screw mounted in bore. ④ Only valid in assembled condition.

1) If rotary shaft seals are used, the outside diameter of the sealing ring must be taken into consideration.

2) Based on rotating inner ring.

3) The recommended INA precision locknuts are not included in the scope of delivery and must be ordered separately.

4) The required axial locknut force must be observed when using other locknuts.

5) Screws not included in scope of delivery. Tightening torque according to manufacturer's data.

6) Only valid in conjunction with INA precision locknuts.
Observe the guidelines on locating/locating bearing arrangements TPI 123.

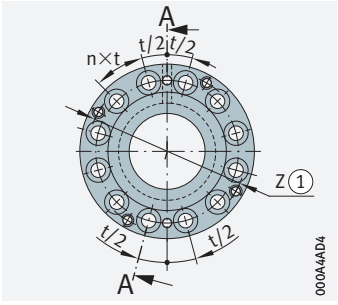

Hole pattern
ZARF5, ZARF6

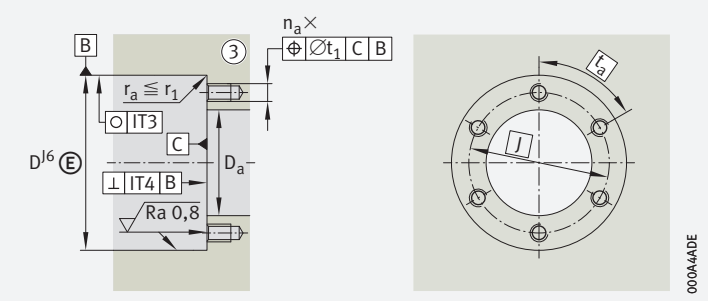

Housing design

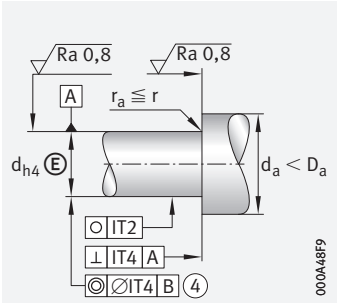

Shaft design (threaded spindle)

Dimensions														Pitch		Mounting dimensions[1]			Mass moment of inertia[2]
d	H_1	C	C_1	D_1	D_2	D_3	B	B_1	B_2	r	r_1	d_1	J	n	t	D_a	d_a	t_1	M_m
										min.	min.				°	max.	min.		kg · cm^2
50	51	22,5	12,5	95	–	–	17,5	–	–	0,3	0,6	6	113	12	30	96	75	0,2	29,8
	72	22,5	12,5	95	75	93	17,5	38,5	18	0,3	0,6	6	113	12	30	96	73	0,2	35,3
55	51	22,5	12,5	100	–	–	17,5	–	–	0,3	0,6	6	118	12	30	101	85	0,2	36,1
	72	22,5	12,5	100	80	98	17,5	38,5	18	0,3	0,6	6	118	12	30	101	78	0,2	43
60	51	22,5	12,5	105	–	–	17,5	–	–	0,3	0,6	6	123	12	30	106	90	0,2	43,8
	72	22,5	12,5	105	90	105	17,5	38,5	18	0,3	0,6	6	123	12	30	106	88	0,2	54,5
65	51	22,5	12,5	110	–	–	17,5	–	–	0,3	0,6	6	128	12	30	111	97	0,2	51
	72	22,5	12,5	110	90	108	17,5	38,5	18	0,3	0,6	6	128	12	30	111	88	0,2	60,1

	Rigidity	Tilting rigidity	Axial runout[2]	Recommended INA precision locknuts[3]			Required locknut force[4]	Rotary shaft seal to DIN 3760; to be ordered separately	Fixing screws[5] DIN EN ISO 4762		
	axial			for radial clamping	for axial clamping	Tightening torque[6]	axial				
d	c_{aL}	c_{kL}				M_A			Size	n_a	t_a
	N/µm	Nm/mrad	µm			Nm	N				°
50	4 600	2 900	1	ZMA50/92	AM50	180	36 224	–	M10	12	30
	4 600	2 900	1	ZMA50/92	AM50	180	36 224	75×95×10	M10	12	30
55	4 900	3 600	1	ZMA55/98	AM55	220	39 807	–	M10	12	30
	4 900	3 600	1	ZMA55/98	AM55	220	39 807	80×100×10	M10	12	30
60	5 300	4 300	1	ZMA60/98	AM60	250	41 144	–	M10	12	30
	5 300	4 300	1	ZMA60/98	AM60	250	41 144	90×110×12	M10	12	30
65	4 800	4 000	1	ZMA65/105	AM65	270	40 652	–	M10	12	30
	4 800	4 000	1	ZMA65/105	AM65	270	40 652	90×110×12	M10	12	30

Needle roller/axial cylindrical roller bearings

Heavy series
With fixing holes

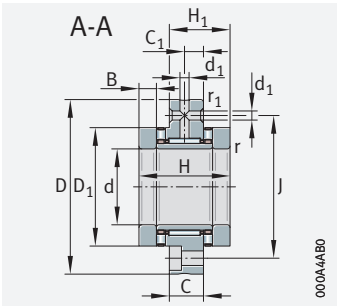

ZARF

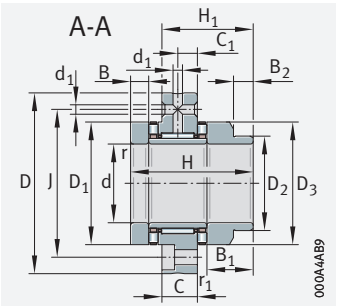

ZARF..-L

d = 70 – 90 mm

Main dimensions			Basic load ratings				Fatigue limit load		Limiting speeds		Bearing frictional torque	Mass	Designation
			axial		radial								
d	D	H	dyn. C_a	stat. C_{0a}	dyn. C_r	stat. C_{0r}	C_{ua}	C_{ur}	n_G oil	n_G grease	M_R	m	
			N	N	N	N	N	N	min^{-1}	min^{-1}	Nm	≈ kg	
70	160	82	201 000	630 000	56 000	119 000	58 000	16 100	2 400	800	4,8	5,2	**ZARF70160-TV**
	160	103	201 000	630 000	56 000	119 000	58 000	16 100	2 400	800	4,8	5,95	**ZARF70160-L-TV**
75	185	100	290 000	890 000	72 000	132 000	85 000	19 100	2 100	700	8	9,4	**ZARF75185-TV**
	185	125	290 000	890 000	72 000	132 000	85 000	19 100	2 100	700	8	10,6	**ZARF75185-L-TV**
90	210	110	325 000	1 030 000	98 000	210 000	95 000	29 000	1 800	700	10,5	13,7	**ZARF90210-TV**
	210	135	325 000	1 030 000	98 000	210 000	95 000	29 000	1 800	700	10,5	15,1	**ZARF90210-L-TV**

medias *https://www.schaeffler.de/std/1F9A*

① Mounting dimension for seal carrier assembly DRS TPI 123.
③ Adjacent construction, bearing screw mounted in bore. ④ Only valid in assembled condition.

1) If rotary shaft seals are used, the outside diameter of the sealing ring must be taken into consideration.

2) Based on rotating inner ring.

3) The recommended INA precision locknuts are not included in the scope of delivery and must be ordered separately.

4) The required axial locknut force must be observed when using other locknuts.

5) Screws not included in scope of delivery. Tightening torque according to manufacturer's data.

6) Only valid in conjunction with INA precision locknuts.
Observe the guidelines on locating/locating bearing arrangements TPI 123.

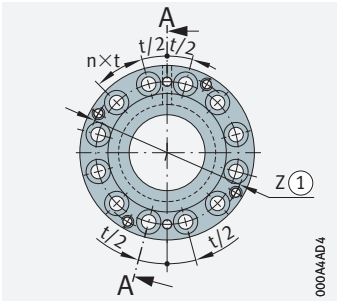

Hole pattern
ZARF7

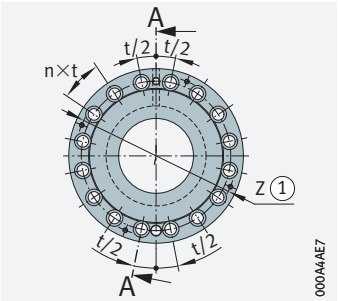

Hole pattern
ZARF90210

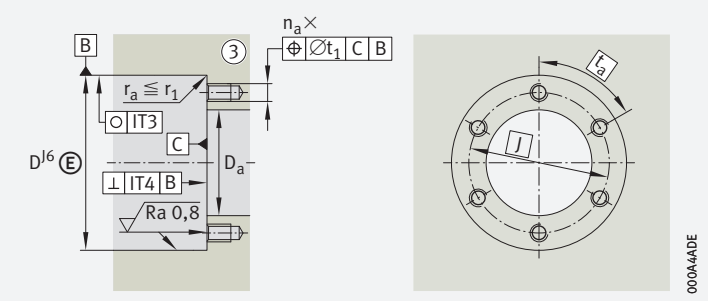

Housing design

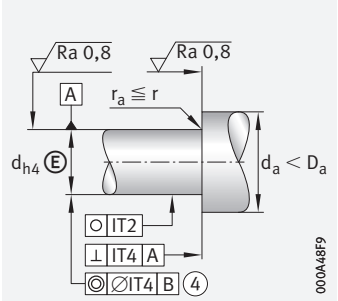

Shaft design (threaded spindle)

Dimensions														Pitch	Mounting dimensions[1]			Mass moment of inertia[2]
d	H_1	C	C_1	D_1	D_2	D_3	B	B_1	B_2	r	r_1	d_1	J	n	t	D_a	d_a	t_1	M_m
										min.	min.				°	max.	min.		kg · cm²
70	51	22,5	12,5	115	–	–	17,5	–	–	0,3	0,6	6	133	12	30	116	100	0,2	62,2
	72	22,5	12,5	115	100	115	17,5	38,5	18	0,3	0,6	6	133	12	30	116	98	0,2	77,3
75	62	27	15	135	–	–	21	–	–	0,3	1	6	155	12	30	136	113	0,4	149
	87	27	15	135	115	135	21	46	20	0,3	1	6	155	12	30	136	110	0,4	188
90	69,5	32	17,5	160	–	–	22,5	–	–	0,3	1	8	180	16	22,5	161	130	0,4	312
	94,5	32	17,5	160	130	158	22,5	47,5	18	0,3	1	8	180	16	22,5	161	125	0,4	372

	Rigidity	Tilting rigidity	Axial runout[2]	Recommended INA precision locknuts[3]			Required locknut force[4]	Rotary shaft seal to DIN 3760; to be ordered separately	Fixing screws[5] DIN EN ISO 4762		
	axial			for radial clamping	for axial clamping	Tightening torque[6]	axial				
d	c_{aL}	c_{kL}				M_A			Size	n_a	t_a
	N/µm	Nm/mrad	µm			Nm	N				°
70	5 800	6 000	1	ZMA70/110	AM70	330	46 786	–	M10	12	30
	5 800	6 000	1	ZMA70/110	AM70	330	46 786	100×120×12	M10	12	30
75	6 600	8 500	2	ZMA75/125	AM75	580	72 971	–	M12	12	30
	6 600	8 500	2	ZMA75/125	AM75	580	72 971	115×140×12	M12	12	30
90	7 700	14 500	2	ZMA90/155	AM90	960	100 669	–	M12	16	22,5
	7 700	14 500	2	ZMA90/155	AM90	960	100 669	130×160×12	M12	16	22,5

Needle roller/axial cylindrical roller bearings

Light series
Without fixing holes

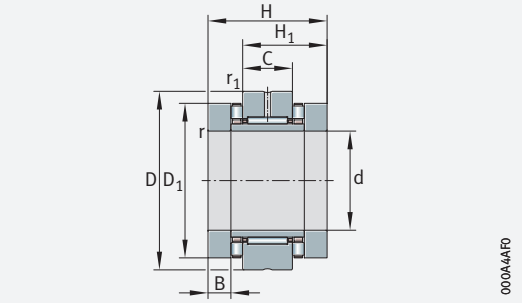

ZARN

d = 15 – 30 mm

Main dimensions			Basic load ratings				Fatigue limit load		Limiting speeds		Bearing frictional torque	Mass	Designation
			axial		radial								
d	D	H	dyn. C_a	stat. C_{0a}	dyn. C_r	stat. C_{0r}	C_{ua}	C_{ur}	n_G oil	n_G grease	M_R	m	
			N	N	N	N	N	N	min^{-1}	min^{-1}	Nm	≈ kg	
15	45	40	24 900	53 000	13 000	17 500	7 500	2 650	8 500	2 200	0,35	0,34	**ZARN1545-TV**
	45	53	24 900	53 000	13 000	17 500	7 500	2 650	8 500	2 200	0,35	0,37	**ZARN1545-L-TV**
17	47	43	26 000	57 000	14 000	19 900	8 000	3 000	7 800	2 100	0,4	0,37	**ZARN1747-TV**
	47	57	26 000	57 000	14 000	19 900	8 000	3 000	7 800	2 100	0,4	0,41	**ZARN1747-L-TV**
20	52	46	33 500	76 000	14 900	22 400	6 400	3 400	7 000	2 000	0,5	0,41	**ZARN2052-TV**
	52	60	33 500	76 000	14 900	22 400	6 400	3 400	7 000	2 000	0,5	0,46	**ZARN2052-L-TV**
25	57	50	35 500	86 000	22 600	36 000	7 300	5 200	6 000	1 900	0,55	0,53	**ZARN2557-TV**
	57	65	35 500	86 000	22 600	36 000	7 300	5 200	6 000	1 900	0,55	0,59	**ZARN2557-L-TV**
30	62	50	39 000	101 000	24 300	41 500	8 500	6 000	5 500	1 800	0,65	0,6	**ZARN3062-TV**
	62	65	39 000	101 000	24 300	41 500	8 500	6 000	5 500	1 800	0,65	0,75	**ZARN3062-L-TV**

medias *https://www.schaeffler.de/std/1F9A*

④ Only valid in assembled condition.

1) If rotary shaft seals are used, the outside diameter of the sealing ring must be taken into consideration.

2) Based on rotating inner ring.

3) The recommended INA precision locknuts are not included in the scope of delivery and must be ordered separately.

4) The required axial locknut force must be observed when using other locknuts.

5) Only valid in conjunction with INA precision locknuts.
Observe the guidelines on locating/locating bearing arrangements TPI 123.

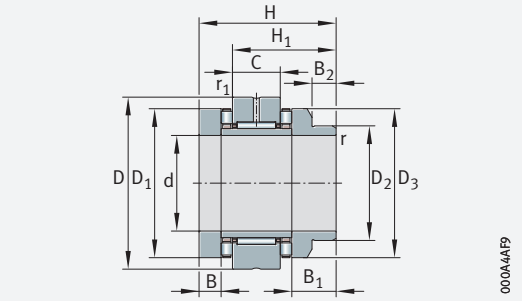

ZARN..-L

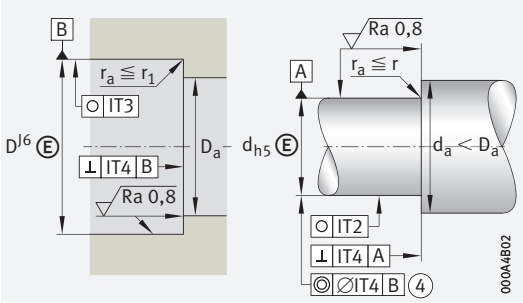

Design of housing and shaft (threaded spindle)

Dimensions											Mounting dimensions[1]	
d	H_1	C	D_1	D_2	D_3	B	B_1	B_2	r min.	r_1 min.	D_a max.	d_a min.
15	28	16	35	–	–	7,5	–	–	0,3	0,6	36	28
	41	16	35	24	34	7,5	20,5	11	0,3	0,6	36	22
17	29,5	16	38	–	–	9	–	–	0,3	0,6	39	28
	43,5	16	38	28	38	9	23	11	0,3	0,6	39	26
20	31	16	42	–	–	10	–	–	0,3	0,6	43	33
	45	16	42	30	40	10	24	12	0,3	0,6	43	28
25	35	20	47	–	–	10	–	–	0,3	0,6	48	39
	50	20	47	36	45	10	25	12	0,3	0,6	48	34
30	35	20	52	–	–	10	–	–	0,3	0,6	53	44
	50	20	52	40	50	10	25	13	0,3	0,6	53	38

	Rigidity axial	Tilting rigidity	Mass moment of inertia[2]	Axial runout[2]	Recommended INA precision locknuts[3]			Required locknut force[4] axial	Rotary shaft seal to DIN 3760; to be ordered separately
					for radial clamping	for axial clamping	Tightening torque[5] M_A		
d	c_{aL} N/µm	c_{kL} Nm/mrad	M_m kg · cm²	µm			Nm	N	
15	1 400	110	0,24	1	ZMA15/33	AM15	10	6 506	–
	1 400	110	0,274	1	ZMA15/33	AM15	10	6 506	24×35×7
17	1 600	160	0,373	1	ZM17	AM17	12	7 078	–
	1 600	160	0,464	1	ZM17	AM17	12	7 078	28×40×7
20	1 800	230	0,615	1	ZMA20/38	AM20	18	8 972	–
	1 800	230	0,683	1	ZMA20/38	AM20	18	8 972	30×42×7
25	1 900	350	0,989	1	ZMA25/45	AM25	25	9 745	–
	1 900	350	1,15	1	ZMA25/45	AM25	25	9 745	36×47×7
30	2 200	520	1,46	1	ZMA30/52	AM30	32	10 662	–
	2 200	520	1,7	1	ZMA30/52	AM30	32	10 662	40×52×7

Needle roller/axial cylindrical roller bearings

Light series
Without fixing holes

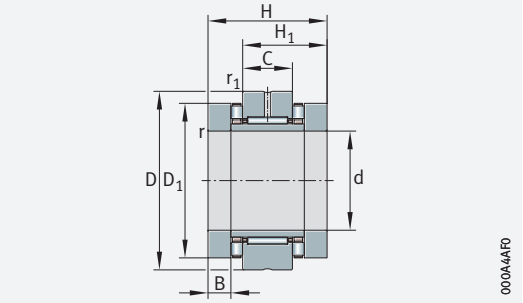

ZARN

d = 35 – 50 mm

Main dimensions			Basic load ratings				Fatigue limit load		Limiting speeds		Bearing frictional torque	Mass	Designation
			axial		radial								
d	D	H	dyn. C_a	stat. C_{0a}	dyn. C_r	stat. C_{0r}	C_{ua}	C_{ur}	n_G oil	n_G grease	M_R	m	
			N	N	N	N	N	N	min^{-1}	min^{-1}	Nm	≈ kg	
35	70	54	56 000	148 000	26 000	47 000	12 900	6 800	4 800	1 700	0,9	0,8	**ZARN3570-TV**
	70	70	56 000	148 000	26 000	47 000	12 900	6 800	4 800	1 700	0,9	0,93	**ZARN3570-L-TV**
40	75	54	59 000	163 000	27 500	53 000	14 200	7 600	4 400	1 600	1	0,9	**ZARN4075-TV**
	75	70	59 000	163 000	27 500	53 000	14 200	7 600	4 400	1 600	1	1	**ZARN4075-L-TV**
45	80	60	61 000	177 000	38 000	74 000	15 500	10 400	4 000	1 500	1,2	1,12	**ZARN4580-TV**
	80	75	61 000	177 000	38 000	74 000	15 500	10 400	4 000	1 500	1,2	1,27	**ZARN4580-L-TV**
50	90	60	90 000	300 000	40 000	82 000	28 000	11 500	3 600	1 200	2,2	1,43	**ZARN5090-TV**
	90	78	90 000	300 000	40 000	82 000	28 000	11 500	3 600	1 200	2,2	1,78	**ZARN5090-L-TV**

medias *https://www.schaeffler.de/std/1F9A*

④ Only valid in assembled condition.

1) If rotary shaft seals are used, the outside diameter of the sealing ring must be taken into consideration.

2) Based on rotating inner ring.

3) The recommended INA precision locknuts are not included in the scope of delivery and must be ordered separately.

4) The required axial locknut force must be observed when using other locknuts.

5) Only valid in conjunction with INA precision locknuts.
Observe the guidelines on locating/locating bearing arrangements TPI 123.

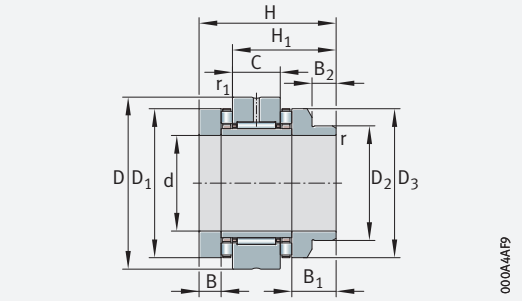

ZARN..-L

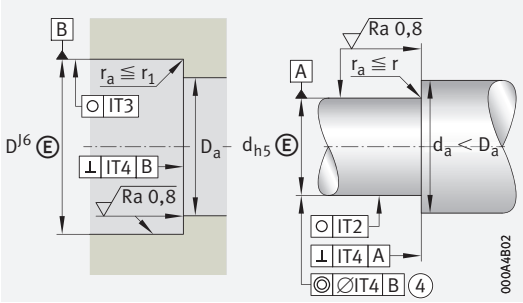

Design of housing and shaft (threaded spindle)

Dimensions											Mounting dimensions[1]	
d	H_1	C	D_1	D_2	D_3	B	B_1	B_2	r min.	r_1 min.	D_a max.	d_a min.
35	37	20	60	–	–	11	–	–	0,3	0,6	61	50
	53	20	60	45	58	11	27	13	0,3	0,6	61	43
40	37	20	65	–	–	11	–	–	0,3	0,6	66	55
	53	20	65	50	63	11	27	14	0,3	0,6	66	48
45	42,5	25	70	–	–	11,5	–	–	0,3	0,6	71	60
	57,5	25	70	56	68	11,5	26,5	13	0,3	0,6	71	54
50	42,5	25	78	–	–	11,5	–	–	0,3	0,6	79	67
	60,5	25	78	60	78	11,5	29,5	14	0,3	0,6	79	58

	Rigidity axial	Tilting rigidity	Mass moment of inertia[2]	Axial runout[2]	Recommended INA precision locknuts[3]			Required locknut force[4]	Rotary shaft seal to DIN 3760; to be ordered separately
					for radial clamping	for axial clamping	Tightening torque[5]	axial	
d	c_{aL} N/µm	c_{kL} Nm/mrad	M_m kg · cm²	µm			M_A Nm	N	
35	2 600	740	2,8	1	ZMA35/58	AM35/58	40	12 143	–
	2 600	740	3,21	1	ZMA35/58	AM35/58	40	12 143	45×60×8
40	2 800	1 030	3,78	1	ZMA40/62	AM40	55	14 240	–
	2 800	1 030	4,35	1	ZMA40/62	AM40	55	14 240	50×65×8
45	3 000	1 340	5,33	1	ZMA45/68	AM45	65	15 112	–
	3 000	1 340	6,03	1	ZMA45/68	AM45	65	15 112	56×70×8
50	4 800	2 470	8,42	1	ZMA50/75	AM50	85	18 410	–
	4 800	2 470	10,46	1	ZMA50/75	AM50	85	18 410	60×80×8

Needle roller/axial cylindrical roller bearings

Heavy series
Without fixing holes

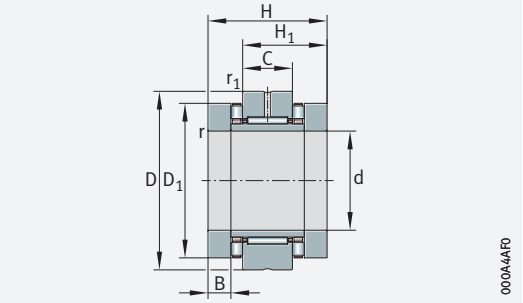

ZARN

d = 20 – 35 mm

Main dimensions			Basic load ratings				Fatigue limit load		Limiting speeds		Bearing frictional torque	Mass	Designation
			axial		radial								
d	D	H	dyn. C_a	stat. C_{0a}	dyn. C_r	stat. C_{0r}	C_{ua}	C_{ur}	n_G oil	n_G grease	M_R	m	
			N	N	N	N	N	N	min^{-1}	min^{-1}	Nm	≈ kg	
20	62	60	64 000	141 000	22 600	36 000	13 100	5 200	6 000	1 500	1,3	0,87	**ZARN2062-TV**
	62	75	64 000	141 000	22 600	36 000	13 100	5 200	6 000	1 500	1,3	0,99	**ZARN2062-L-TV**
25	72	60	80 000	199 000	24 300	41 500	18 600	6 000	4 900	1 400	1,6	1,17	**ZARN2572-TV**
	72	75	80 000	199 000	24 300	41 500	18 600	6 000	4 900	1 400	1,6	1,32	**ZARN2572-L-TV**
30	80	66	107 000	265 000	26 000	47 000	22 900	6 800	4 400	1 300	2,1	1,5	**ZARN3080-TV**
	80	82	107 000	265 000	26 000	47 000	22 900	6 800	4 400	1 300	2,1	1,7	**ZARN3080-L-TV**
35	85	66	105 000	265 000	27 500	53 000	22 900	7 600	4 000	1 250	2,3	1,65	**ZARN3585-TV**
	85	82	105 000	265 000	27 500	53 000	22 900	7 600	4 000	1 250	2,3	1,8	**ZARN3585-L-TV**

medias *https://www.schaeffler.de/std/1F9A*

④ Only valid in assembled condition.

1) If rotary shaft seals are used, the outside diameter of the sealing ring must be taken into consideration.

2) Based on rotating inner ring.

3) The recommended INA precision locknuts are not included in the scope of delivery and must be ordered separately.

4) The required axial locknut force must be observed when using other locknuts.

5) Only valid in conjunction with INA precision locknuts.
Observe the guidelines on locating/locating bearing arrangements TPI 123.

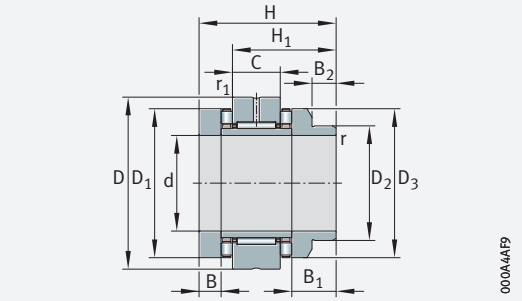

ZARN..-L

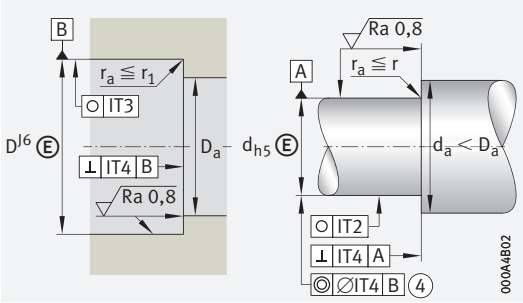

Design of housing and shaft (threaded spindle)

Dimensions											Mounting dimensions[1]	
d	H_1	C	D_1	D_2	D_3	B	B_1	B_2	r min.	r_1 min.	D_a max.	d_a min.
20	40	20	52	–	–	12,5	–	–	0,3	0,6	53	38
	55	20	52	40	50	12,5	27,5	13	0,3	0,6	53	38
25	40	20	62	–	–	12,5	–	–	0,3	0,6	63	45
	55	20	62	48	60	12,5	27,5	13	0,3	0,6	63	45
30	43	20	68	–	–	14	–	–	0,3	0,6	69	52
	59	20	68	52	66	14	30	13	0,3	0,6	69	50
35	43	20	73	–	–	14	–	–	0,3	0,6	74	60
	59	20	73	60	73	14	30	13	0,3	0,6	74	58

	Rigidity axial	Tilting rigidity	Mass moment of inertia[2]	Axial runout[2]	Recommended INA precision locknuts[3]			Required locknut force[4] axial	Rotary shaft seal to DIN 3760; to be ordered separately
					for radial clamping	for axial clamping	Tightening torque[5]		
d	c_{aL} N/µm	c_{kL} Nm/mrad	M_m kg · cm²	µm			M_A Nm	N	
20	2 300	400	1,98	1	ZMA20/52	AM20	38	17 623	–
	2 300	400	2,27	1	ZMA20/52	AM20	38	17 623	40×52×7
25	3 000	800	3,88	1	ZMA25/58	AM25	55	20 790	–
	3 000	800	4,51	1	ZMA25/58	AM25	55	20 790	48×62×8
30	3 300	1 100	6,53	1	ZMA30/65	AM30	75	24 287	–
	3 300	1 100	7,43	1	ZMA30/65	AM30	75	24 287	52×68×8
35	3 500	1 300	8,47	1	ZMA35/70	AM35	100	27 480	–
	3 500	1 300	10,4	1	ZMA35/70	AM35	100	27 480	60×75×8

Needle roller/axial cylindrical roller bearings

Heavy series
Without fixing holes

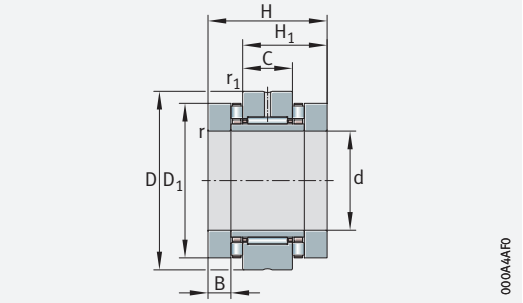

ZARN

d = 40 – 55 mm

Main dimensions			Basic load ratings				Fatigue limit load		Limiting speeds		Bearing frictional torque	Mass	Designation
			axial		radial								
d	D	H	dyn. C_a	stat. C_{0a}	dyn. C_r	stat. C_{0r}	C_{ua}	C_{ur}	n_G oil	n_G grease	M_R	m	
			N	N	N	N	N	N	min^{-1}	min^{-1}	Nm	≈ kg	
40	90	75	117 000	315 000	38 000	74 000	27 000	10 400	3 700	1 200	2,5	2,09	**ZARN4090-TV**
	90	93	117 000	315 000	38 000	74 000	27 000	10 400	3 700	1 200	2,5	2,39	**ZARN4090-L-TV**
45	105	82	154 000	405 000	40 000	82 000	37 500	11 500	3 300	1 150	3,5	3,02	**ZARN45105-TV**
	105	103	154 000	405 000	40 000	82 000	37 500	11 500	3 300	1 150	3,5	3,42	**ZARN45105-L-TV**
50	110	82	172 000	480 000	41 500	88 000	44 500	12 700	3 100	1 100	3,8	3,3	**ZARN50110-TV**
	110	103	172 000	480 000	41 500	88 000	44 500	12 700	3 100	1 100	3,8	3,75	**ZARN50110-L-TV**
55	115	82	177 000	500 000	44 000	98 000	46 500	13 800	2 900	1 000	4	3,5	**ZARN55115-TV**
	115	103	177 000	500 000	44 000	98 000	46 500	13 800	2 900	1 000	4	4	**ZARN55115-L-TV**

medias *https://www.schaeffler.de/std/1F9A*

④ Only valid in assembled condition.

1) If rotary shaft seals are used, the outside diameter of the sealing ring must be taken into consideration.

2) Based on rotating inner ring.

3) The recommended INA precision locknuts are not included in the scope of delivery and must be ordered separately.

4) The required axial locknut force must be observed when using other locknuts.

5) Only valid in conjunction with INA precision locknuts.
Observe the guidelines on locating/locating bearing arrangements TPI 123.

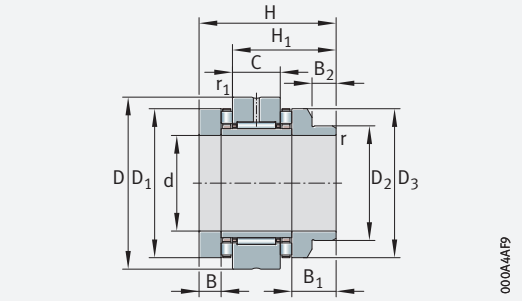

ZARN..-L

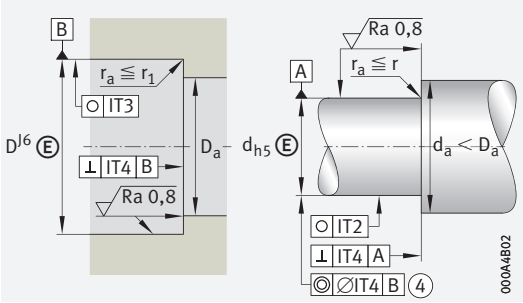

Design of housing and shaft (threaded spindle)

Dimensions											Mounting dimensions[1]	
d	H_1	C	D_1	D_2	D_3	B	B_1	B_2	r	r_1	D_a	d_a
									min.	min.	max.	min.
40	50	25	78	–	–	16	–	–	0,3	0,6	79	65
	68	25	78	60	78	16	34	14	0,3	0,6	79	58
45	53,5	25	90	–	–	17,5	–	–	0,3	0,6	91	70
	74,5	25	90	70	88	17,5	38,5	18	0,3	0,6	91	68
50	53,5	25	95	–	–	17,5	–	–	0,3	0,6	96	75
	74,5	25	95	75	93	17,5	38,5	18	0,3	0,6	96	73
55	53,5	25	100	–	–	17,5	–	–	0,3	0,6	101	85
	74,5	25	100	80	98	17,5	38,5	18	0,3	0,6	101	78

	Rigidity	Tilting rigidity	Mass moment of inertia[2]	Axial runout[2]	Recommended INA precision locknuts[3]			Required locknut force[4]	Rotary shaft seal to DIN 3760; to be ordered separately
	axial				for radial clamping	for axial clamping	Tightening torque[5]	axial	
d	c_{aL}	c_{kL}	M_m				M_A		
	N/µm	Nm/mrad	kg · cm²	µm			Nm	N	
40	3 800	1 800	13,3	1	ZMA40/75	AM40	120	29 834	–
	3 800	1 800	15,5	1	ZMA40/75	AM40	120	29 834	60×80×8
45	4 000	2 100	23,7	1	ZMA45/85	AM45	150	33 549	–
	4 000	2 100	28,1	1	ZMA45/85	AM45	150	33 549	70×90×10
50	4 600	2 900	29,8	1	ZMA50/92	AM50	180	36 224	–
	4 600	2 900	35,3	1	ZMA50/92	AM50	180	36 224	75×95×10
55	4 900	3 600	36,1	1	ZMA55/98	AM55	220	39 807	–
	4 900	3 600	43	1	ZMA55/98	AM55	220	39 807	80×100×10

Needle roller/axial cylindrical roller bearings

Heavy series
Without fixing holes

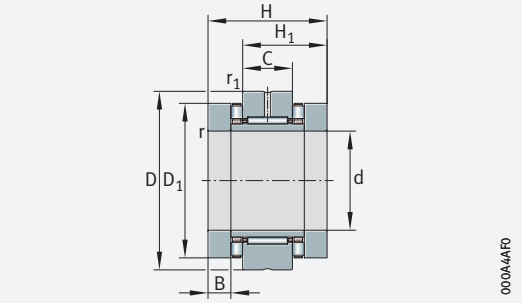

ZARN

d = 60 – 90 mm

Main dimensions			Basic load ratings				Fatigue limit load		Limiting speeds		Bearing frictional torque	Mass	Designation
			axial		radial								
d	D	H	dyn. C_a	stat. C_{0a}	dyn. C_r	stat. C_{0r}	C_{ua}	C_{ur}	n_G oil	n_G grease	M_R	m	
			N	N	N	N	N	N	min^{-1}	min^{-1}	Nm	≈ kg	
60	120	82	187 000	550 000	44 500	92 000	51 000	12 900	2 700	950	4,2	3,7	**ZARN60120-TV**
	120	103	187 000	550 000	44 500	92 000	51 000	12 900	2 700	950	4,2	4,85	**ZARN60120-L-TV**
65	125	82	172 000	500 000	54 000	104 000	46 500	14 900	2 600	900	4	4	**ZARN65125-TV**
	125	103	172 000	500 000	54 000	104 000	46 500	14 900	2 600	900	4	4,6	**ZARN65125-L-TV**
70	130	82	201 000	630 000	56 000	119 000	58 000	16 100	2 400	800	4,8	4,1	**ZARN70130-TV**
	130	103	201 000	630 000	56 000	119 000	58 000	16 100	2 400	800	4,8	4,85	**ZARN70130-L-TV**
75	155	100	290 000	890 000	72 000	132 000	85 000	19 100	2 100	700	8	7,9	**ZARN75155-TV**
	155	125	290 000	890 000	72 000	132 000	85 000	19 100	2 100	700	8	9,1	**ZARN75155-L-TV**
90	180	110	325 000	1 030 000	98 000	210 000	95 000	29 000	1 800	700	10,5	11,8	**ZARN90180-TV**
	180	135	325 000	1 030 000	98 000	210 000	95 000	29 000	1 800	700	10,5	13,2	**ZARN90180-L-TV**

medias *https://www.schaeffler.de/std/1F9A*

④ Only valid in assembled condition.

1) If rotary shaft seals are used, the outside diameter of the sealing ring must be taken into consideration.

2) Based on rotating inner ring.

3) The recommended INA precision locknuts are not included in the scope of delivery and must be ordered separately.

4) The required axial locknut force must be observed when using other locknuts.

5) Only valid in conjunction with INA precision locknuts.
Observe the guidelines on locating/locating bearing arrangements TPI 123.

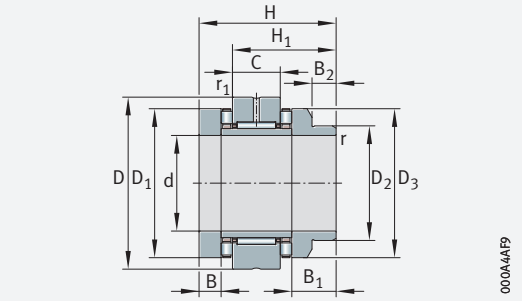

ZARN..-L

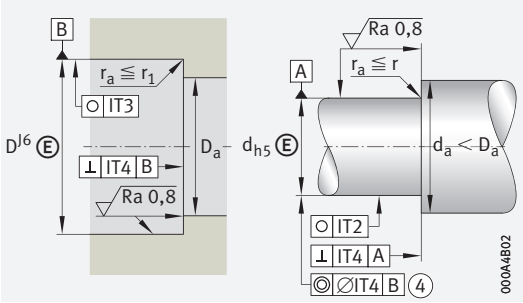

Design of housing and shaft (threaded spindle)

Dimensions											Mounting dimensions[1]	
d	H_1	C	D_1	D_2	D_3	B	B_1	B_2	r min.	r_1 min.	D_a max.	d_a min.
60	53,5	25	105	–	–	17,5	–	–	0,3	0,6	106	90
	74,5	25	105	90	105	17,5	38,5	18	0,3	0,6	106	88
65	53,5	25	110	–	–	17,5	–	–	0,3	0,6	111	97
	74,5	25	110	90	108	17,5	38,5	18	0,3	0,6	111	88
70	53,5	25	115	–	–	17,5	–	–	0,3	0,6	116	100
	74,5	25	115	100	115	17,5	38,5	18	0,3	0,6	116	98
75	65	30	135	–	–	21	–	–	0,3	1	136	113
	90	30	135	115	135	21	46	20	0,3	1	136	110
90	72,5	35	160	–	–	22,5	–	–	0,3	1	161	130
	97,5	35	160	130	158	22,5	47,5	18	0,3	1	161	125

	Rigidity axial	Tilting rigidity	Mass moment of inertia[2]	Axial runout[2]	Recommended INA precision locknuts[3]			Required locknut force[4] axial	Rotary shaft seal to DIN 3760; to be ordered separately
					for radial clamping	for axial clamping	Tightening torque[5] M_A		
d	c_{aL} N/µm	c_{kL} Nm/mrad	M_m kg · cm²	µm			Nm	N	
60	5 300	4 300	43,8	1	ZMA60/98	AM60	250	41 144	–
	5 300	4 300	54,5	1	ZMA60/98	AM60	250	41 144	90×110×12
65	4 800	4 000	51	1	ZMA65/105	AM65	270	40 652	–
	4 800	4 000	60,1	1	ZMA65/105	AM65	270	40 652	90×110×12
70	5 800	6 000	62,2	1	ZMA70/110	AM70	330	46 786	–
	5 800	6 000	77,3	1	ZMA70/110	AM70	330	46 786	100×120×12
75	6 600	8 500	149	2	ZMA75/125	AM75	580	72 971	–
	6 600	8 500	188	2	ZMA75/125	AM75	580	72 971	115×140×12
90	7 700	14 500	312	2	ZMA90/155	AM90	960	100 669	–
	7 700	14 500	372	2	ZMA90/155	AM90	960	100 669	130×160×12

Seal carrier assemblies

For ZARF, light series

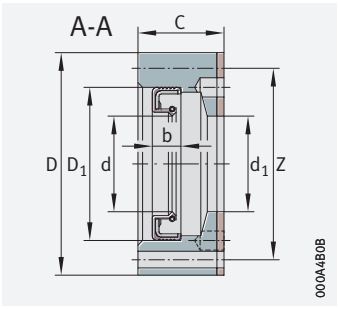

DRS[1)]

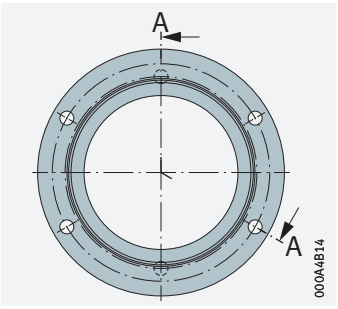

Hole pattern DRS1560, DRS1762

d_1 = 35 – 78 mm

Main dimensions			Dimension	Mass	Designation	Rotary shaft seal					Matching bearing
d_1	D	C	Z	m ≈ kg		d	D_1	b	Socket head screws to DIN EN ISO 4762		
									Size	Quantity	
35	60	14	52,4	0,16	**DRS1560**	35	45	7	M3×20	4	ZARF1560(-L)-TV
38	62	15,5	54,4	0,18	**DRS1762**	38	47	7	M3×25	4	ZARF1762(-L)-TV
42	68	17	60,4	0,2	**DRS2068**	42	55	8	M3×25	4	ZARF2068(-L)-TV
47	75	17	67,4	0,22	**DRS2575**	47	62	6	M3×25	4	ZARF2575(-L)-TV
52	80	17	73,4	0,26	**DRS3080**	52	68	8	M3×25	4	ZARF3080(-L)-TV
60	90	19	80	0,38	**DRS3590**	60	72	8	M4×25	4	ZARF3590(-L)-TV
65	100	19	90	0,47	**DRS40100**	65	80	8	M4×30	4	ZARF40100(-L)-TV
70	105	20	95	0,53	**DRS45105**	70	85	8	M4×30	4	ZARF45105(-L)-TV
78	115	20	106	0,54	**DRS50115**	78	100	10	M3×30	4	ZARF50115(-L)-TV

medias *https://www.schaeffler.de/std/1F9A*

1) The seal carrier assembly is supplied as a sealing set in individual parts comprising:
- a seal flange
- a rotary shaft seal
- a gasket
- socket head screws

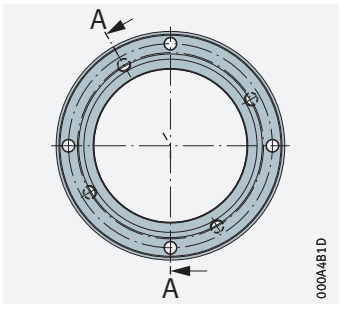

Hole pattern DRS3080, DRS3590, DRS50115

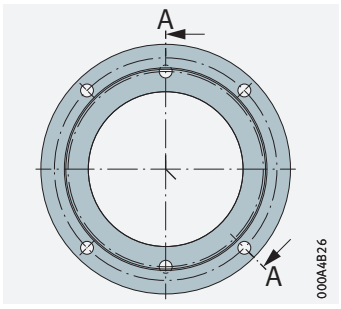

Hole pattern DRS2068, DRS2575, DRS40100, DRS45105

Seal carrier assemblies

For ZARF, heavy series

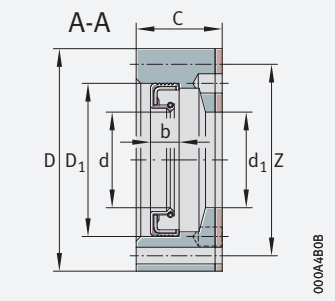

DRS[1)]

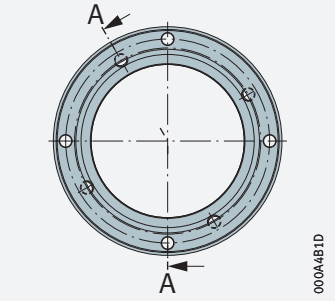

Hole pattern

d_1 = 52 – 160 mm

Main dimensions			Dimension	Mass	Designation	Rotary shaft seal					Matching bearing
d_1	D	C	Z	m ≈ kg		d	D_1	b	Socket head screws to DIN EN ISO 4762 Size	Quantity	
52	80	22	73,4	0,3	**DRS2080**	52	68	8	M3×30	4	ZARF2080(-L)-TV
62	90	22	81	0,38	**DRS2590**	62	75	10	M3×30	4	ZARF2590(-L)-TV
68	105	25	95	0,67	**DRS30105**	68	85	10	M4×35	4	ZARF30105(-L)-TV
73	110	25	101	0,6	**DRS35110**	73	95	10	M3×30	4	ZARF35110(-L)-TV
78	115	27,5	106	0,7	**DRS40115**	78	100	10	M3×35	4	ZARF40115(-L)-TV
90	130	31	120	1,1	**DRS45130**	90	110	12	M4×40	4	ZARF45130(-L)-TV
95	140	30	127,5	1,4	**DRS50140**	95	115	13	M5×40	4	ZARF50140(-L)-TV
100	145	30	132,5	1,42	**DRS55145**	100	120	12	M5×40	4	ZARF55145(-L)-TV
105	150	30	137,5	1,42	**DRS60150**	105	125	12	M5×40	4	ZARF60150(-L)-TV
110	155	30	142,5	1,43	**DRS65155**	110	130	12	M5×40	4	ZARF65155(-L)-TV
115	160	30	147,5	1,5	**DRS70160**	115	135	13	M5×40	4	ZARF70160(-L)-TV
135	185	36	172,5	2,4	**DRS75185**	135	160	15	M5×50	4	ZARF75185(-L)-TV
160	210	38	194	2,7	**DRS90210**	160	180	15	M5×50	4	ZARF90210(-L)-TV

medias *https://www.schaeffler.de/std/1F9A*

1) The seal carrier assembly is supplied as a sealing set in individual parts comprising:
- a seal flange
- a rotary shaft seal
- a gasket
- socket head screws

Precision locknuts

For axial clamping

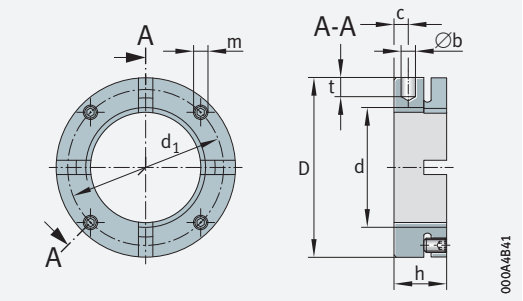

AM15 to AM40 with 4 segments
AM45 to AM90 with 6 segments
AM100 to AM130 with 8 segments

d = M15×1 – M130×2

Main dimensions			Grub screw	Locknut[1]				Mass	Designation	Dimensions				
			Tightening torque	Axial rupture load	Breakaway torque	Reference tightening torque	Mass moment of inertia							
d	D	h	M_A	F_{aB}	M_L at M_{AL}		M_M	m		b	t	d_1	c	m
			Nm	N	Nm	Nm	kg · cm²	≈ kg		H11				
M15×1	30	18	3	100 000	20	10	0,09	0,06	**AM15**	4	5	24	5	M5
M17×1	32	18	3	120 000	25	15	0,11	0,07	**AM17**	4	5	26	5	M5
M20×1	38	18	5	145 000	45	18	0,23	0,13	**AM20**	4	6	31	5	M6
M25×1,5	45	20	5	205 000	60	25	0,49	0,16	**AM25**	5	6	38	6	M6
M30×1,5	52	20	5	250 000	70	32	0,86	0,2	**AM30**	5	7	45	6	M6
M30×1,5	65	30	5	400 000	70	32	2,8	0,5	**AM30/65**	6	8	45	6	M6
M35×1,5	58	20	5	280 000	90	40	1,3	0,23	**AM35/58**	5	7	51	6	M6
M35×1,5	65	22	5	330 000	100	40	2,4	0,33	**AM35**	6	8	58	6	M6
M40×1,5	65	22	5	350 000	120	55	2,3	0,3	**AM40**	6	8	58	6	M6
M40×1,5	85	32	5	570 000	120	55	7,6	0,75	**AM40/85**	6	8	58	6	M6
M45×1,5	70	22	5	360 000	220	65	2,9	0,34	**AM45**	6	8	63	6	M6
M50×1,5	75	25	5	450 000	280	85	4,3	0,43	**AM50**	6	8	68	8	M6
M55×2	85	26	15	520 000	320	95	7,7	0,6	**AM55**	6	8	75	8	M8
M60×2	90	26	15	550 000	365	100	9,4	0,65	**AM60**	6	8	80	8	M8
M65×2	100	26	15	560 000	400	120	14,6	0,83	**AM65**	8	10	88	8	M8
M70×2	100	28	15	650 000	450	130	14,7	0,79	**AM70**	8	10	90	9	M8
M75×2	115	30	20	750 000	610	150	29	1,23	**AM75**	8	10	102	10	M10
M80×2	110	30	20	670 000	770	160	21,3	0,93	**AM80**	8	10	98	10	M10
M85×2	115	30	20	690 000	930	180	24,8	0,97	**AM85**	8	10	102	10	M10
M90×2	130	32	20	900 000	1 100	200	48	1,53	**AM90**	8	10	118	13	M10
M100×2	130	30	20	740 000	1 200	250	38	1,12	**AM100**	8	10	118	10	M10
M110×2	140	30	20	770 000	1 300	250	48	1,22	**AM110**	8	10	128	10	M10
M120×2	155	30	20	880 000	1 450	250	75	1,56	**AM120**	8	10	142	10	M10
M130×2	165	30	20	900 000	1 600	250	92	1,67	**AM130**	8	10	152	10	M10

medias *https://www.schaeffler.de/std/1F9A*

[1] Attention!

If precision locknuts AM are fitted using the socket AMS, a maximum of twice the tightening torque of the bearing is permissible in accordance with the dimension table.

Precision locknuts

For radial clamping

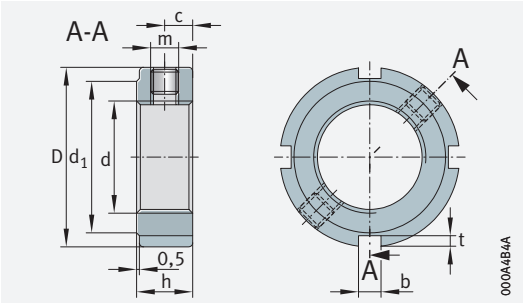

ZM, ZMA

d = M6×0,5 – M55×2

Main dimensions			Grub screw	Locknut				Mass	Designation	Dimensions				
			Tightening torque	Axial rupture load	Breakaway torque	Reference tightening torque	Mass moment of inertia							
d	D	h	M_A	F_{aB}	M_L at M_{AL}		M_M	m		b	t	d_1	c	m
			Nm	N	Nm	Nm	kg · cm²	≈ kg						
M6×0,5	16	8	1	17 000	20	2	0,004	0,01	**ZM06**	3	2	11	4	M4
M8×0,75	16	8	1	23 000	25	4	0,004	0,01	**ZM08**[1]	3	2	11	4	M4
M10×1	18	8	1	31 000	30	6	0,006	0,01	**ZM10**[1]	3	2	14	4	M4
M12×1	22	8	1	38 000	30	8	0,013	0,015	**ZM12**	3	2	18	4	M4
M15×1	25	8	1	50 000	30	10	0,021	0,018	**ZM15**	3	2	21	4	M4
M15×1	33	16	3	106 000	30	10	0,14	0,08	**ZMA15/33**	4	2	28	8	M5
M17×1	28	10	3	57 000	30	15	0,401	0,028	**ZM17**	4	2	23	5	M5
M20×1	32	10	3	69 000	40	18	0,068	0,035	**ZM20**	4	2	27	5	M5
M20×1	38	20	3	174 000	40	18	0,297	0,12	**ZMA20/38**	5	2	33	10	M5
M20×1	52	25	3	218 000	40	18	1,38	0,32	**ZMA20/52**	5	2	47	12,5	M5
M25×1,5	38	12	5	90 000	60	25	0,157	0,055	**ZM25**	5	2	33	6	M6
M25×1,5	45	20	5	211 000	60	25	0,572	0,16	**ZMA25/45**	5	2	40	10	M6
M25×1,5	58	28	5	305 000	60	25	2,36	0,43	**ZMA25/58**	6	2,5	52	14	M6
M30×1,5	45	12	5	112 000	70	32	0,304	0,075	**ZM30**	5	2	40	6	M6
M30×1,5	52	22	5	270 000	70	32	1,1	0,22	**ZMA30/52**	5	2	47	11	M6
M30×1,5	65	30	5	390 000	70	32	3,94	0,55	**ZMA30/65**	6	2,5	59	15	M6
M35×1,5	52	12	5	134 000	80	40	0,537	0,099	**ZM35**	5	2	47	6	M6
M35×1,5	58	22	5	300 000	80	40	1,66	0,26	**ZMA35/58**	6	2,5	52	11	M6
M35×1,5	70	30	5	460 000	80	40	5,2	0,61	**ZMA35/70**	6	2,5	64	15	M6
M40×1,5	58	14	5	157 000	95	55	0,945	0,14	**ZM40**	6	2,5	52	7	M6
M40×1,5	62	22	15	310 000	95	55	2,07	0,27	**ZMA40/62**	6	2,5	56	11	M8
M40×1,5	75	30	15	520 000	95	55	6,72	0,67	**ZMA40/75**	6	2,5	69	15	M8
M45×1,5	65	14	5	181 000	110	65	1,48	0,17	**ZM45**	6	2,5	59	7	M6
M45×1,5	68	24	15	360 000	110	65	3,2	0,35	**ZMA45/68**	6	2,5	62	12	M8
M45×1,5	85	32	15	630 000	110	65	11,9	0,92	**ZMA45/85**	7	3	78	16	M8
M50×1,5	70	14	5	205 000	130	85	1,92	0,19	**ZM50**	6	2,5	64	7	M6
M50×1,5	75	25	15	415 000	130	85	4,89	0,43	**ZMA50/75**	6	2,5	68	12,5	M8
M50×1,5	92	32	15	680 000	130	85	16,1	1,06	**ZMA50/92**	8	3,5	84	16	M8
M55×2	75	16	5	229 000	150	95	2,77	0,23	**ZM55**	7	3	68	8	M6
M55×2	98	32	15	620 000	150	95	20,5	1,17	**ZMA55/98**	8	3,5	90	16	M8

medias *https://www.schaeffler.de/std/1F9A*

[1] When clamped, the grub screw protrudes by ≈ 0,5 mm.

Precision locknuts

For radial clamping

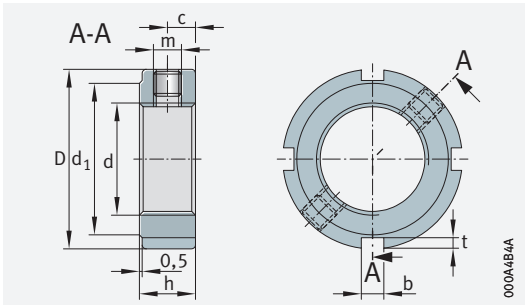

ZM, ZMA

d = M60×2 – M150×2

Main dimensions			Grub screw	Locknut				Mass	Designation	Dimensions				
			Tightening torque	Axial rupture load	Breakaway torque	Reference tightening torque	Mass moment of inertia							
d	D	h	M_A	F_{aB}	M_L at M_{AL}		M_M	m		b	t	d_1	c	m
			Nm	N	Nm	Nm	kg · cm^2	≈ kg						
M60×2	80	16	5	255 000	180	100	3,45	0,25	**ZM60**	7	3	73	8	M6
M60×2	98	32	15	680 000	180	100	19,6	1,07	**ZMA60/98**	8	3,5	90	16	M8
M65×2	85	16	5	280 000	200	120	4,24	0,27	**ZM65**	7	3	78	8	M6
M65×2	105	32	15	750 000	200	120	25,6	1,21	**ZMA65/105**	8	3,5	97	16	M8
M70×2	92	18	15	305 000	220	130	6,61	0,36	**ZM70**	8	3,5	85	9	M8
M70×2	110	35	15	810 000	220	130	33	1,4	**ZMA70/110**	8	3,5	102	17,5	M8
M75×2	98	18	15	331 000	260	150	8,41	0,4	**ZM75**	8	3,5	90	9	M8
M75×2	125	38	15	880 000	260	150	62,2	2,11	**ZMA75/125**	8	3,5	117	19	M8
M80×2	105	18	15	355 000	285	160	11,2	0,46	**ZM80**	8	3,5	95	9	M8
M80×2	120	35	15	810 000	285	160	44,6	1,33	**ZMA80/120**	8	4	105	17,5	M8
M85×2	110	18	15	385 000	320	190	13,1	0,49	**ZM85**	8	3,5	102	9	M8
M90×2	120	20	15	410 000	360	200	21,8	0,7	**ZM90**	10	4	108	10	M8
M90×2	130	38	15	910 000	360	200	64,1	2,01	**ZMA90/130**	10	4	120	19	M8
M90×2	155	38	15	1 080 000	360	200	150	3,36	**ZMA90/155**	10	4	146	19	M8
M100×2	130	20	15	465 000	425	250	28,6	0,77	**ZM100**	10	4	120	10	M8
M100×2	140	38	20	940 000	425	250	82,8	2,23	**ZMA100/140**	12	5	128	19	M10
M105×2	140	22	20	495 000	475	300	44,5	1,05	**ZM105**	12	5	126	11	M10
M110×2	145	22	20	520 000	510	350	50,1	1,09	**ZM110**	12	5	133	11	M10
M115×2	150	22	20	550 000	550	400	56,2	1,13	**ZM115**	12	5	137	11	M10
M120×2	155	24	20	580 000	600	450	68,4	1,28	**ZM120**	12	5	138	12	M10
M125×2	160	24	20	610 000	640	500	76,1	1,33	**ZM125**	12	5	148	12	M10
M130×2	165	24	20	630 000	700	550	84,3	1,36	**ZM130**	12	5	149	12	M10
M140×2	180	26	38	690 000	800	600	133	1,85	**ZM140**	14	6	160	13	M12
M150×2	195	26	38	750 000	900	650	188	2,24	**ZM150**	14	6	171	13	M12

medias *https://www.schaeffler.de/std/1F9A*

Sockets

For precision locknuts with axial clamping

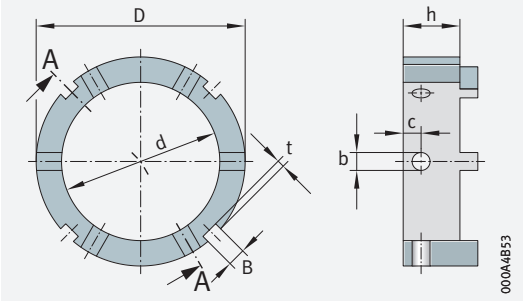

AMS

D = 32 – 155 mm

Main dimensions			Mass	Designation	Dimensions				For precision locknuts
D	h	d	m ≈ kg		b H11	c	B	t	
32	14	22	0,047	**AMS20**	4	5	4	2	AM15, AM17, AM20
45	15	35	0,093	**AMS30**	5	5	5	2	AM25, AM30, AM35/58, AM30/65
65	16	45	0,217	**AMS40**	6	6	6	2,5	AM35, AM40
70	19	53	0,245	**AMS50**	6	6	6	2,5	AM45, AM50
85	20	65	0,37	**AMS60**	6	6	7	3	AM55, AM60
98	25	75	0,615	**AMS70**	8	10	8	3,5	AM65, AM70
110	25	85	0,755	**AMS80**	8	10	8	3,5	AM75, AM80, AM85
130	25	95	1,215	**AMS90**	8	10	10	4	AM90
130	25	110	0,74	**AMS110**	8	10	10	4	AM100, AM110
155	25	130	1,485	**AMS130**	8	10	12	5	AM120, AM130

medias *https://www.schaeffler.de/std/1F9A*

Sockets

For precision locknuts suitable for radial or axial clamping
For torque wrenches
Suitable for combination with socket AMS

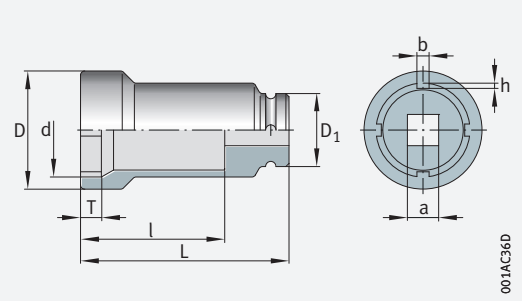

LOCKNUT-SOCKET-KM

Main dimensions			Mass	Designation	Dimensions					
d	D	a inch	m ≈ kg		D_1	L	l	T	b	h
18,3	22	3/8	0,1	**LOCKNUT-SOCKET-KM0**	22	57	45	5	2,6	1,95
22,4	28	3/8	0,1	**LOCKNUT-SOCKET-KM1**	22	57	45	5	2,6	1,95
25,4	33	1/2	0,2	**LOCKNUT-SOCKET-KM2**	30	82	65	6	3,5	1,9
28,4	36	1/2	0,24	**LOCKNUT-SOCKET-KM3**	30	82	65	6	3,5	1,9
32,5	38	1/2	0,28	**LOCKNUT-SOCKET-KM4**	30	82	58	9	3,5	1,95
38,5	46	1/2	0,38	**LOCKNUT-SOCKET-KM5**	30	82	58	9	4,7	1,95
45,5	53	1/2	0,42	**LOCKNUT-SOCKET-KM6**	30	82	58	9	4,7	1,95
52,5	60	1/2	0,45	**LOCKNUT-SOCKET-KM7**	30	82	58	9	4,7	1,95
58,6	68	1/2	0,61	**LOCKNUT-SOCKET-KM8**	30	82	58	9	5,7	2,4
65,7	73,5	3/4	0,8	**LOCKNUT-SOCKET-KM9**	44	90	60	13,5	5,7	2,45
70,7	78,5	3/4	0,87	**LOCKNUT-SOCKET-KM10**	44	90	60	13,5	5,7	2,45
75,7	83,5	3/4	0,9	**LOCKNUT-SOCKET-KM11**	44	90	60	13,5	6,7	2,95
80,7	88,5	3/4	1	**LOCKNUT-SOCKET-KM12**	44	90	60	13,5	6,7	2,95
85,7	94	3/4	1,09	**LOCKNUT-SOCKET-KM13**	44	90	60	13,5	6,7	2,95
92,6	103	1	2,2	**LOCKNUT-SOCKET-KM14**	62	110	80	12	7,6	3,4
98,6	109	1	2,3	**LOCKNUT-SOCKET-KM15**	62	110	80	13	7,6	3,35
105,8	116	1	2,1	**LOCKNUT-SOCKET-KM16**	62	110	80	15	7,6	3,45
110,8	121	1	2,61	**LOCKNUT-SOCKET-KM17**	62	110	80	16	7,6	3,45
120,8	131	1	2,9	**LOCKNUT-SOCKET-KM18**	62	110	80	16	9,5	3,9
125,8	137	1	3,01	**LOCKNUT-SOCKET-KM19**	62	110	80	17	9,5	3,9
130,8	143	1	3,3	**LOCKNUT-SOCKET-KM20**	62	110	80	18	9,5	3,9
140,8	153	1	3,5	**LOCKNUT-SOCKET-KM21**	62	110	80	18	11,5	4,9
145,8	158	1	3,75	**LOCKNUT-SOCKET-KM22**	62	110	80	18	11,5	4,9
155,8	170	1	4,15	**LOCKNUT-SOCKET-KM24**	62	110	80	18	11,5	4,9

medias *https://www.schaeffler.de/std/1F9A*

d	Locknuts	Precision locknuts		
18,3	KM0	ZM10	–	–
22,4	KM1	ZM12	–	–
25,4	KM2	–	–	–
28,4	KM3	ZM17	–	–
32,5	KM4	ZM20	–	–
38,5	KM5	ZMA20/38	ZM25	–
45,5	KM6	ZMA25/45	ZM30	–
52,5	KM7	ZMA20/52	ZMA30/52	ZM35
58,6	KM8	ZMA25/58	ZMA35/58	ZM40
65,7	KM9	ZMA30/65	ZM45	–
70,7	KM10	ZMA35/70	ZM50	–
75,7	KM11	ZM55	–	–
80,7	KM12	–	–	–
85,7	KM13	ZMA45/85	ZM65	–
92,6	KM14	ZMA50/92	ZM70	–
98,6	KM15	ZMA55/98	ZMA60/98	ZM75
105,8	KM16	ZMA65/105	ZM80	–
110,8	KM17	ZMA70/110	ZM85	–
120,8	KM18	ZM90	–	–
125,8	KM19	–	–	–
130,8	KM20	ZMA90/130	ZM100	–
140,8	KM21	ZMA100/140	ZM105	–
145,8	KM22	ZM110	–	–
155,8	KM24	ZM120	–	–



3 Bearings for combined loads

3.1 General features

✎ *Design variants*

Bearings for combined loads are available as:

- axial/radial bearings ➤*1339*| 1
- axial angular contact ball bearings ➤*1339*| 2
- axial/radial bearings with incremental angular measuring system, with pitch-coded reference marks ➤*1340*| 3
- axial/radial bearings with absolute value angular measuring system ➤*1341*| 4

Product catalogue

The standard range of these bearings is described in detail in Technical Product Information TPI 120, High Precision Bearings for Combined Loads, and in our electronic product catalogue ***medias*** *professional*.

✎ *Downloading TPI 120*

Technical Product Information TPI 120 is available from Schaeffler at *https://www.schaeffler.de/std/1D5B*.

✎ ***medias***

The following link will take you to the Schaeffler electronic product selection and information system: *https://medias.schaeffler.com*.

✎ *App for services*

The app “PrecisionDesk” offers extensive services for rotary and linear bearings of a super precision design and assists fitters and engineers in the selection and mounting of bearings. Further information on PrecisionDesk ➤*1360*, download *https://www.schaeffler.de/std/1D59*.

X-life premium quality

X-life

The axial radial bearings YRTC and YRTCMA in the X-life design achieve higher limiting speeds with lower friction and higher tilting rigidity than the previous standard YRT. The plastic cage segments with grease reservoir and the patented raceway geometry ensure very low bearing friction for preloaded roller bearings.

✎ *Increased customer benefits due to X-life*

The advantages of this bearing design are:

- limiting speeds up to 80% higher
- 50% lower frictional torque
- lower running temperatures
- lower noise level
- lower lubricant demand
- longer grease operating life
- tilting rigidity up to 20% higher
- longer operating life of the bearings

As a result of the low and uniform frictional torque, the bearings are suitable for combination with torque motors and for prolonged use at high speeds. The bearings have a high axial and radial runout accuracy and are optionally available with an absolute measuring system integrated in the bearing (YRTCMA).

3.2 Axial/radial bearings, axial angular contact ball bearings

Axial/radial bearings YRT, YRTC and YRTS and axial angular contact ball bearings ZKLDF are ready-to-fit high precision bearings for high precision applications with combined loads. They can support radial loads, axial loads from both sides and tilting moments without clearance and are particularly suitable for bearing arrangements with high requirements for running accuracy.

Simple mounting due to fixing holes

Due to the fixing holes in the bearing rings, mounting of the units is very simple. After mounting, the bearings are radially and axially preloaded. The mounting dimensions of all series are identical.

Axial radial bearings YRTC and YRTS

Axial/radial bearings are double direction axial bearings for screw mounting, with a radial guidance bearing. These ready-to-fit, greased units are very rigid, have high load carrying capacity and run with particularly high accuracy. They can support radial forces, axial forces from both directions and tilting moments free from clearance. The bearings are available in several series ➤*1339*|*1*.

1
Axial/radial bearings

F_r = *radial load*
F_a = *axial load*
M = *tilting moment*

① *For standard applications (YRTC)*
② *For high speeds (YRTS)*

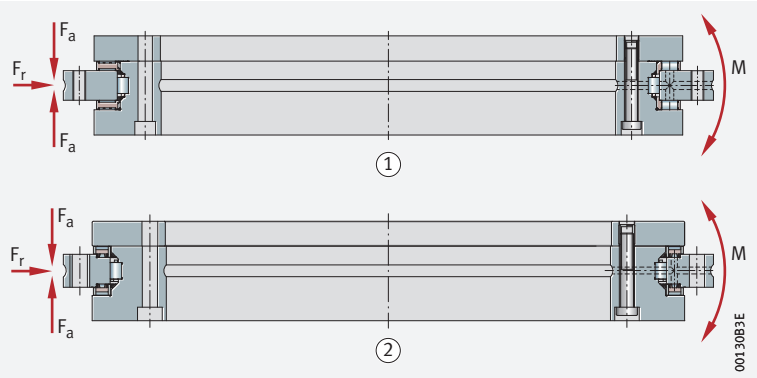

YRTC for high demands on tilting rigidity

Axial radial bearings YRTC with a low, uniform frictional torque and in combination with torque motors are suitable for standard applications such as indexing tables and swivel type milling heads.

YRTS suitable for high speeds with low frictional torque

For the bearing arrangements of direct drive axes, there is the series YRTS. Due to their high limiting speeds and very low, uniform frictional torque across the whole speed range, these bearings are particularly suitable for combination with torque motors.

For higher running accuracy requirements, both series are also available with restricted axial and radial runout.

Axial angular contact ball bearings ZKLDF

Suitable for very high speeds and long operating durations

Axial angular contact ball bearings ZKLDF are highly suitable for high speed applications with long operating duration ➤*1339*|*2*. They are characterised by high tilting rigidity, low friction and low lubricant consumption.

2
Axial angular contact ball bearing ZKLDF

F_r = *radial load*
F_a = *axial load*
M = *tilting moment*

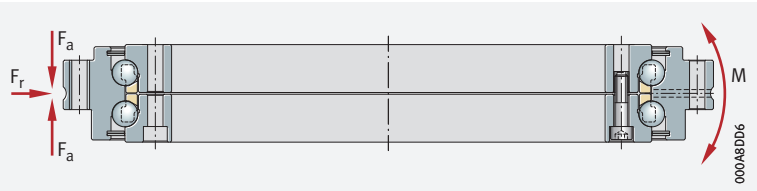

Preferred areas of use

Axial angular contact ball bearings are particularly suitable for precision applications involving combined loads. Their preferred areas of use are bearing arrangements in rotary tables with a main spindle function, for example in combined milling and turning, as well as in milling, grinding and honing heads and in measurement and testing equipment.

3.3 Axial/radial bearings with incremental angular measuring system

Features

Axial/radial bearings with an incremental angular measuring system and pitch-coded reference marks comprise an axial/radial bearing YRTCM or YRTSM, each with a dimensional scale, an SRM electronic measuring system and signal leads SRMC ➤*1340*|*3*. The electronic measuring system SRM comprises two measuring heads, two stacks of shims and an electronic evaluation system ➤*1340*|*3*. The signal leads for connecting the measuring heads to the electronic evaluation system can be ordered individually in various designs.

Equivalent in mechanical terms to series YRT and YRTS

Bearings of series YRTCM or YRTSM correspond in mechanical terms to axial/radial bearings YRTC or YRTS, but are additionally fitted with a magnetic dimensional scale. The measuring system can measure angles to an accuracy of a few angular seconds by non-contact, magneto-resistive means.

3
Axial/radial bearing with incremental angular measuring system

① *Measuring heads with shims*
② *Connection cable SRMC*
③ *Electronic evaluation system*

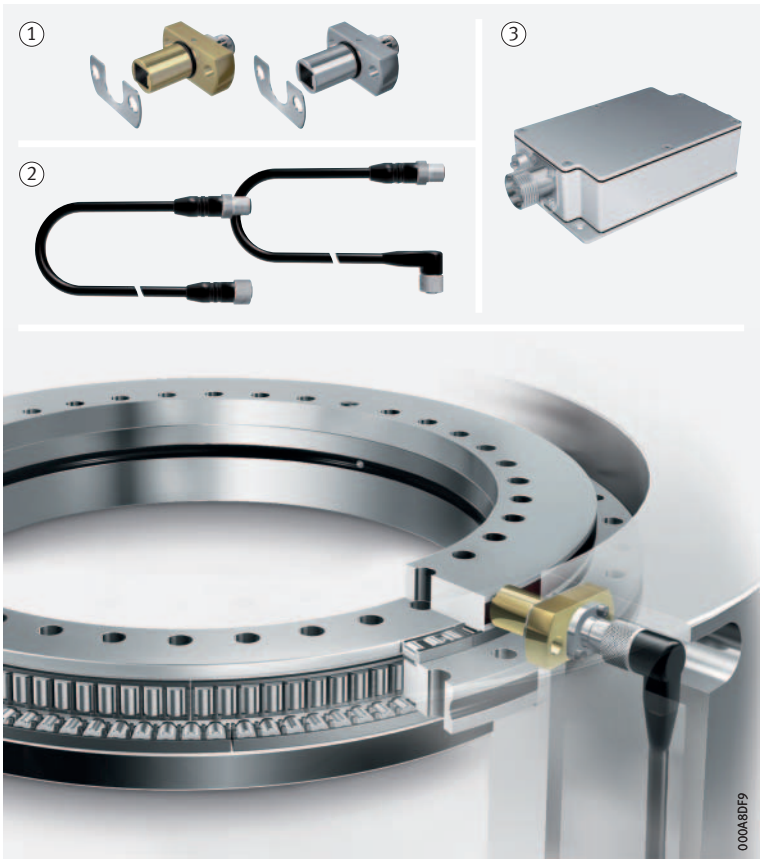

Advantages of the angular measuring system

The measuring system:

- allows, due to the rigid connection to the adjacent construction, very good control characteristics (control stability and dynamics) and is therefore particularly suitable for axes with torque motor drive
- offers a high maximum measuring speed of up to 16,5 m/s
- operates by non-contact means and is therefore not subject to wear
- carries out measurement irrespective of tilting and position
- has automatically self-adjusting electronics
- has a self-centring function
- is unaffected by lubricants
- is easy to fit, the measuring heads are easily adjustable, there is no need for alignment of the bearing and a separate measuring system
- requires no additional parts
  - the dimensional scale and measuring heads are integrated in the bearings and adjacent construction respectively
  - the resulting space saved can be used for the machining area of the machine
- does not give any problems relating to supply cables. The cables can be laid within the adjacent construction directly through the large bearing bore
- gives savings on components, overall design envelope and costs due to the compact, integrated design requiring fewer components

3.4 Axial/radial bearings with absolute value angular measuring system

Equivalent in mechanical terms to series YRT and YRTS

Axial/radial bearings with absolute value angular measuring system YRTCMA and YRTSMA correspond in mechanical terms to series YRTC and YRTS, but are additionally fitted with an absolute value angular measuring system ➤*1341*|4.

4 *Axial/radial bearing with absolute value angular measuring system*



High system measuring accuracy of angular measuring systems integrated in the bearing

The ideal location for mounting a measuring system is directly in the bearing arrangement, which means that higher system accuracies can be achieved with measuring systems integrated in the bearing than with measuring systems that are attached to the axis a significant distance from the relevant bearing arrangement. The very precise radial runout of the precision rotary axis bearing YRT(S)MA is utilised here.

The absolute angular measuring system integrated directly in the bearing offers considerable advantages:

- an absolute interface, dispensing with the need for reference travel
- a hollow shaft design, freeing up the centre of the machine for other components
- the facility for highly dynamic and precise control loops
- savings in terms of design envelope
- simplifications in design and mounting
- resistance to environmental influences, lubricants and cooling lubricants

Inductive measurement method ABSYS (AMO)

The inductive measurement method ABSYS (AMO) is based on contact-free scanning of a structured dimensional scale that is applied directly as a measurement ring to the bearing inner ring ➤*1342*| *5*. The irregular structure with absolute coding is captured on a bitwise inductive basis by a coil arrangement that is integrated in the measuring head.

The binary value obtained, which occurs only once per angular position within the entire measurement range, is converted into an absolute angular value by a microcontroller using a conversion table.

The electronic evaluation system is integrated in the measuring head, so the system can be connected directly to the controller. The measuring head is configured such that no adjustment of the measurement gap is required and the rolling bearing chamber is protected against the egress and ingress of lubricants and other media. Other measuring head designs are available by agreement.

5
Absolute value angular measuring system

① *Measuring head*
② *Measurement ring*
③ *Inner ring of axial/radial bearing*

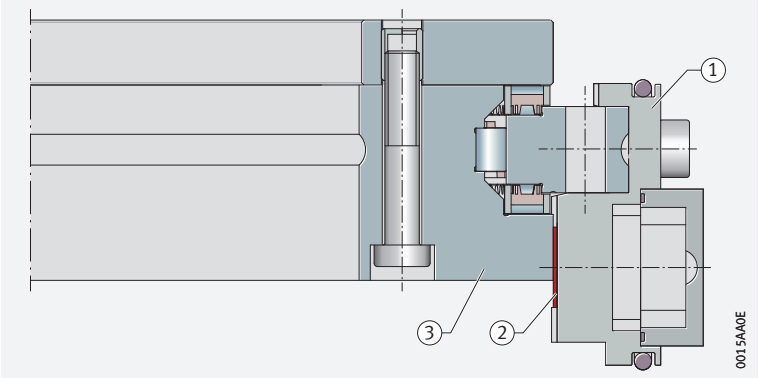



Axial/radial bearings

Double direction

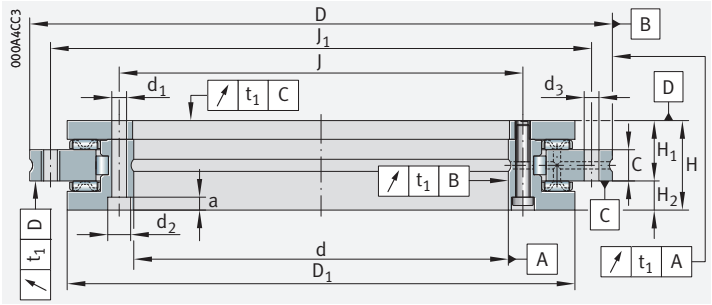

YRT

d = 50 – 80 mm

Main dimensions			Basic load ratings				Fatigue limit load		Limiting speed[1]	Mass	Designation
			axial		radial		axial	radial			
d	D	H	dyn. C_a	stat. C_{0a}	dyn. C_r	stat. C_{0r}	C_{ua}	C_{ur}	n_G	m	
			kN	kN	kN	kN	kN	kN	min^{-1}	≈ kg	
50 0/–0,008	126 0/–0,011	30	56	280	28,5	49,5	30	7,2	440	1,6	**YRT50**
80 0/–0,009	146 0/–0,011	35	38	158	44	98	14,4	14,1	350	2,4	**YRT80-TV**[6]

medias *https://www.schaeffler.de/std/1F9A*

① Two retaining screws; ② Screw counterbores open (in the L-section ring to the bearing bore), bearing inside diameter is unsupported in this area

1) For high operating durations or continuous operation, please contact us.

2) Including retaining screws or threaded extraction holes.

3) Diameter of inner ring for design of adjacent construction.

4) Attention!
For fixing holes in the adjacent construction. Observe the pitch of the bearing holes.

5) Tightening torque for screws to DIN EN ISO 4762, grade 10.9.

6) Cages made from glass fibre reinforced polyamide 66.

7) M5 screws (on inner ring) to 8,5 Nm and M4 screws (on outer ring) to 4,5 Nm.

8) Rigidity values taking account of the rolling element set,
the deformation of the bearing rings and the screw connections.
For explanations TPI 120.

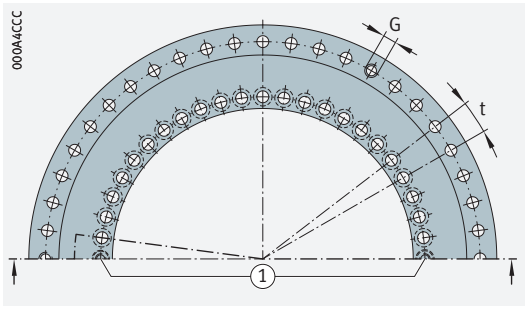

Hole pattern

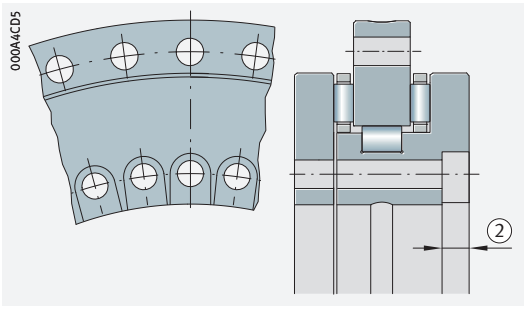

For YRT80-TV and YRT100

	Dimensions						Fixing holes						Pitch[2]		Threaded extraction hole		Screw tightening torque
							Inner ring				Outer ring						
	d	H_1	H_2	C	D_1[3] max.	J	J_1	d_1	d_2	a	Quantity[4]	d_3	Quantity[4]	n	t °	G	Quantity	M_A[5] Nm
	50	20	10	10	105	63	116	5,6	–	–	10	5,6	12	12	30	–	–	8,5
	80	23,35	11,65	12	130	92	138	5,6	10	4	10	4,6	12	12	30	–	–	8,5[7]

	Designation	Rigidity					
		Bearing position[8]			Rolling element set		
d		axial c_{aL} kN/µm	radial c_{rL} kN/µm	Tilting rigidity c_{kL} kNm/mrad	axial c_{aL} kN/µm	radial c_{rL} kN/µm	Tilting rigidity c_{kL} kNm/mrad
50	**YRT50**	1,3	1,1	1,25	6,2	1,5	5,9
80	**YRT80-TV**[6]	1,6	1,8	2,5	4	2,6	6,3

Axial/radial bearings

Double direction

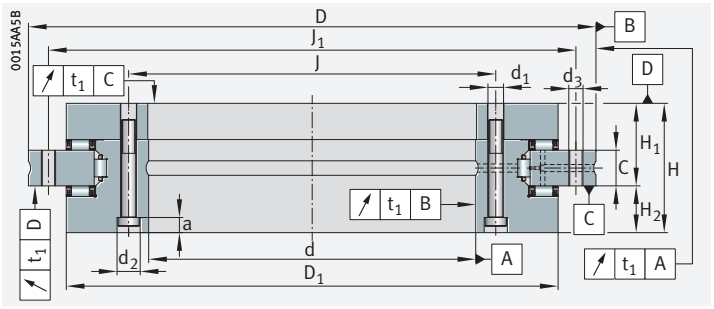

YRTC

d = 100 – 1 030 mm

Main dimensions			Basic load ratings				Fatigue limit load		Limiting speed		Mass	Designation
			axial		radial		axial	radial	Continuous operation	Swivel type operation[2]		X-life ➤1338
d	D	H	dyn. C_a	stat. C_{0a}	dyn. C_r	stat. C_{0r}	C_{ua}	C_{ur}	n_G	n_G	m	
			kN	kN	kN	kN	kN	kN	min^{-1}	min^{-1}	≈ kg	
100 0 /–0,01	185 0 /–0,02	38	105	455	49,5	88	50	14,8	1 200	–	3,65	**YRTC100-XL**
120 0 /–0,01	210 0 /–0,015	40	112	520	69	124	55	19,8	900	–	4,61	**YRTC120-XL**
150 0 /–0,013	240 0 /–0,015	40	128	650	74	146	65	22,1	800	–	5,4	**YRTC150-XL**
180 0 /–0,013	280 0 /–0,018	43	134	730	100	200	69	29,5	600	–	7,2	**YRTC180-XL**
200 0 /–0,015	300 0 /–0,018	45	147	850	123	275	78	39,5	450	–	9,2	**YRTC200-XL**
260 0 /–0,018	385 0 /–0,02	55	168	1 090	140	355	94	47	300	–	17,8	**YRTC260-XL**
325 0 /–0,023	450 0 /–0,023	60	247	1 900	183	530	164	62	200	–	24,7	**YRTC325-XL**
395 0 /–0,023	525 0 /–0,028	65	265	2 190	200	640	180	71	200	–	32,5	**YRTC395-XL**
460 0 /–0,023	600 0 /–0,028	70	290	2 550	265	880	201	96	150	–	45,2	**YRTC460-XL**
580 0 /–0,025	750 0 /–0,035	90	580	4 450	235	730	320	78	80	200	89	**YRTC580-XL**
650 0 /–0,038	870 0 /–0,05	122	910	6 800	455	1 300	510	136	70	170	170	**YRTC650-XL**
850 0 /–0,05	1 095 0 /–0,063	124	1 020	8 500	520	1 690	590	163	50	125	253	**YRTC850-XL**
1 030 0 /–0,063	1 300 0 /–0,08	145	1 140	10 300	580	2 050	680	187	40	100	375	**YRTC1030-XL**

medias *https://www.schaeffler.de/std/1F9A*

① Two retaining screws

1) Including retaining screws or threaded extraction holes.

2) Short operating duration.

3) Diameter of inner ring for design of adjacent construction.

4) Attention!
For fixing holes in the adjacent construction. Observe the pitch of the bearing holes.

5) Tightening torque for screws to DIN EN ISO 4762, grade 10.9.

6) Rigidity values taking account of the rolling element set,
the deformation of the bearing rings and the screw connections.
For explanations TPI 120.

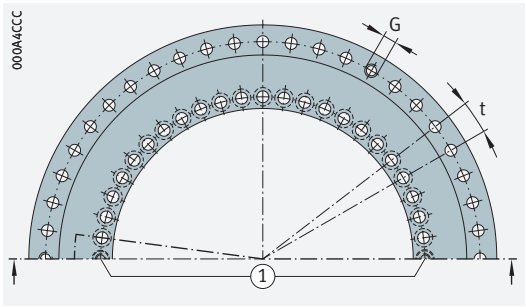

Hole pattern

Dimensions							Fixing holes						Pitch[1]		Threaded extraction hole		Screw tightening torque
							Inner ring				Outer ring						
d	H_1	H_2	C	D_1[3] max.	J	J_1	d_1	d_2	a	Quantity[4]	d_3	Quantity[4]	n	t °	G	Quantity	M_A[5] Nm
100	25	13	12	161	112	170	5,6	10	5,4	16	5,6	15	18	20	M5	3	8,5
120	26	14	12	185	135	195	7	11	6,2	22	7	21	24	15	M8	3	14
150	26	14	12	214,5	165	225	7	11	6,2	34	7	33	36	10	M8	3	14
180	29	14	15	245,1	194	260	7	11	6,2	46	7	45	48	7,5	M8	3	14
200	30	15	15	274,4	215	285	7	11	6,2	46	7	45	48	7,5	M8	3	14
260	36,5	18,5	18	347	280	365	9,3	15	8,2	34	9,3	33	36	10	M12	3	34
325	40	20	20	415,1	342	430	9,3	15	8,2	34	9,3	33	36	10	M12	3	34
395	42,5	22,5	20	487,7	415	505	9,3	15	8,2	46	9,3	45	48	7,5	M12	3	34
460	46	24	22	560,9	482	580	9,3	15	8,2	46	9,3	45	48	7,5	M12	3	34
580	60	30	30	700	610	720	11,4	18	11	46	11,4	42	48	7,5	M12	6	68
650	78	44	34	800	680	830	14	20	13	46	14	42	48	7,5	M12	6	116
850	80,5	43,5	37	1 018	890	1 055	18	26	17	58	18	54	60	6	M12	6	284
1 030	92,5	52,5	40	1 215	1 075	1 255	18	26	17	70	18	66	72	5	M16	6	284

	Designation	Rigidity					
		Bearing position[6]			Rolling element set		
d		axial c_{aL} kN/µm	radial c_{rL} kN/µm	Tilting rigidity c_{kL} kNm/mrad	axial c_{aL} kN/µm	radial c_{rL} kN/µm	Tilting rigidity c_{kL} kNm/mrad
100	**YRTC100-XL**	2,65	2,25	7,5	8,7	3,7	23,5
120	**YRTC120-XL**	2,9	2,6	11,2	9,8	4	35,5
150	**YRTC150-XL**	3,8	3,2	18,6	12	4,8	61
180	**YRTC180-XL**	4,7	3,6	29	13,5	5,3	88,5
200	**YRTC200-XL**	4,9	4,1	40	15,5	6,2	128
260	**YRTC260-XL**	6,9	5,3	104	19	8,1	265
325	**YRTC325-XL**	7,1	6,3	159	33	9,9	633
395	**YRTC395-XL**	9,9	5,8	280	37	13	1 002
460	**YRTC460-XL**	12	6,5	429	43	17	1 543
580	**YRTC580-XL**	11,9	2,9	735	41,8	11,2	1 960
650	**YRTC650-XL**	20,6	7,3	1 193	51,4	8,2	3 554
850	**YRTC850-XL**	26,5	11,9	2 351	61,9	12	6 772
1 030	**YRTC1030-XL**	36,4	11,2	5 400	74,9	14,2	11 165

Axial/radial bearings

Double direction

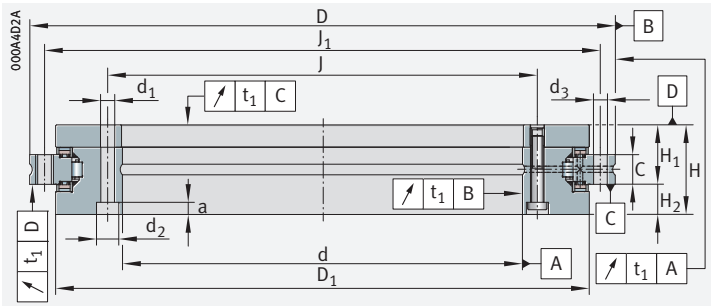

YRTS

d = 200 – 460 mm

Main dimensions			Basic load ratings				Fatigue limit load		Limiting speed	Mass	Designation
			axial		radial		axial	radial			
d	D	H	dyn. C_a	stat. C_{0a}	dyn. C_r	stat. C_{0r}	C_{ua}	C_{ur}	n_G	m	
			kN	kN	kN	kN	kN	kN	min^{-1}	≈ kg	
200 0/–0,015	300 0/–0,018	45	155	840	94	226	93	32	1 160	9,7	**YRTS200**
260 0/–0,018	385 0/–0,02	55	173	1 050	110	305	108	40	910	18,3	**YRTS260**
325 0/–0,023	450 0/–0,023	60	191	1 260	109	320	122	43	760	25	**YRTS325**
395 0/–0,023	525 0/–0,028	65	214	1 540	121	390	142	49,5	650	33	**YRTS395**
460 0/–0,023	600 0/–0,028	70	221	1 690	168	570	149	65	560	45	**YRTS460**

medias *https://www.schaeffler.de/std/1F9A*

① Two retaining screws; ② Screw counterbores open (in the L-section ring to the bearing bore), bearing inside diameter is unsupported in this area

1) Including retaining screws or threaded extraction holes.

2) Diameter of inner ring for design of adjacent construction.

3) Attention!
For fixing holes in the adjacent construction. Observe the pitch of the bearing holes.

4) Tightening torque for screws to DIN EN ISO 4762, grade 10.9.

5) Rigidity values taking account of the rolling element set, the deformation of the bearing rings and the screw connections. For explanations TPI 120.

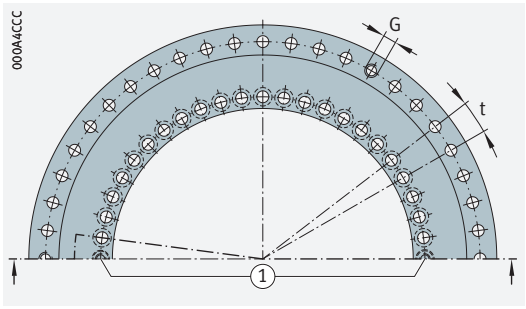

Hole pattern

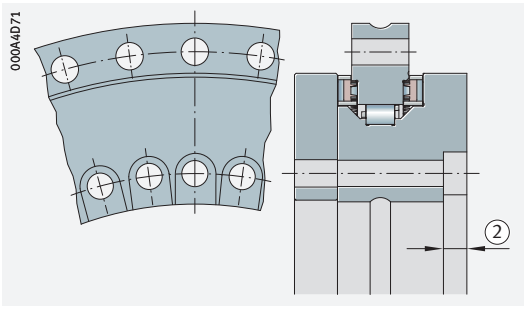

For YRTS325

Dimensions							Fixing holes						Pitch[1]		Threaded extraction hole		Screw tightening torque
							Inner ring				Outer ring						
d	H_1	H_2	C	D_1[2] max.	J	J_1	d_1	d_2	a	Quantity[3]	d_3	Quantity[3]	n	t °	G	Quantity	M_A[4] Nm
200	30	15	15	274,4	215	285	7	11	6,2	46	7	45	48	7,5	M8	3	14
260	36,5	18,5	18	347	280	365	9,3	15	8,2	34	9,3	33	36	10	M12	3	34
325	40	20	20	415,1	342	430	9,3	15	8,2	34	9,3	33	36	10	M12	3	34
395	42,5	22,5	20	487,7	415	505	9,3	15	8,2	46	9,3	45	48	7,5	M12	3	34
460	46	24	22	560,9	482	580	9,3	15	8,2	46	9,3	45	48	7,5	M12	3	34

	Designation	Rigidity					
		Bearing position[5]			Rolling element set		
d		axial c_{aL} kN/µm	radial c_{rL} kN/µm	Tilting rigidity c_{kL} kNm/mrad	axial c_{aL} kN/µm	radial c_{rL} kN/µm	Tilting rigidity c_{kL} kNm/mrad
200	**YRTS200**	4	1,2	29	13,6	3,9	101
260	**YRTS260**	5,4	1,6	67	16,8	5,8	201
325	**YRTS325**	6,6	1,8	115	19,9	7,1	350
395	**YRTS395**	7,8	2	195	23,4	8,7	582
460	**YRTS460**	8,9	1,8	280	25,4	9,5	843

Axial angular contact ball bearings

Double direction

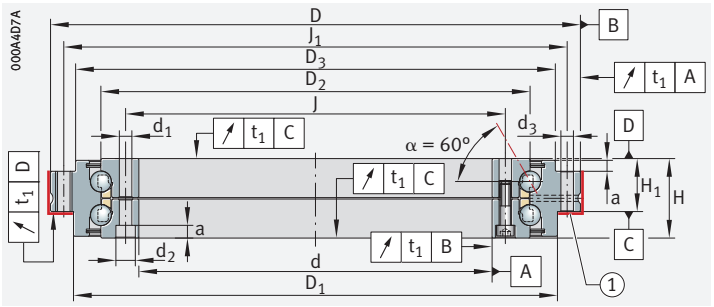

ZKLDF

d = 100 – 460 mm

Main dimensions[1]			Basic load ratings		Fatigue limit load	Limiting speed[2]	Mass	Designation
d	D	H	dyn. C_a	stat. C_{0a}	C_{ua}	n_G	m	
			kN	kN	kN	min^{-1}	≈ kg	
100	185	38	71	265	10,3	5 000	3,8	**ZKLDF100**
120	210	40	76	315	11,5	4 300	4,8	**ZKLDF120**
150	240	40	81	380	12,6	3 600	5,6	**ZKLDF150**
180	280	43	85	440	13,5	3 500	7,7	**ZKLDF180**
200	300	45	121	610	17,9	3 200	10	**ZKLDF200**
260	385	55	162	920	23,8	2 400	19	**ZKLDF260**
325	450	60	172	1 110	26	2 000	25	**ZKLDF325**
395	525	65	241	1 580	34	1 600	33	**ZKLDF395**
460	600	70	255	1 860	37	1 400	47	**ZKLDF460**

medias *https://www.schaeffler.de/std/1F9A*

① Contact surface/centring diameter; ② Two retaining screws; ③ Screw counterbores open (in the L-section ring to the bearing bore), bearing inside diameter is unsupported in this area

1) Sizes d > 460 mm available by agreement.

2) The limiting speeds increased by a factor of two are valid for bearings of the current generation with the internal suffix -B.

3) Including retaining screws or threaded extraction holes.

4) Attention!
For fixing holes in the adjacent construction. Observe the pitch of the bearing holes.

5) Tightening torque for screws to DIN EN ISO 4762, grade 10.9.

6) Rigidity values taking account of the rolling element set, the deformation of the bearing rings and the screw connections. For explanations TPI 120.

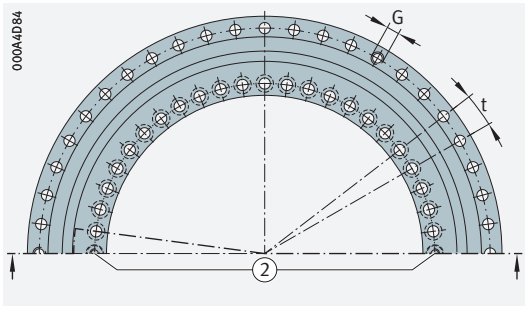

Hole pattern

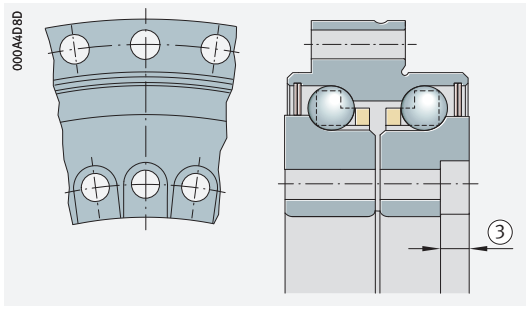

For ZKLDF100, ZKLDF325

Dimensions[1]							Fixing holes						Pitch[3]		Threaded extraction hole		Screw tightening torque
							Inner ring				Outer ring						
d	H_1	D_1	D_2	D_3	J	J_1	d_1	d_2	a	Quantity[4]	d_3	Quantity[4]	n	t °	G	Quantity	M_A[5] Nm
100	25	161	136	158	112	170	5,6	10	5,4	16	5,6	15	18	20	M5	3	8,5
120	26	185	159	181	135	195	7	11	6,2	22	7	21	24	15	M8	3	14
150	26	214	188	211	165	225	7	11	6,2	34	7	33	36	10	M8	3	14
180	29	244	219	246	194	260	7	11	6,2	46	7	45	48	7,5	M8	3	14
200	30	274	243	271	215	285	7	11	6,2	46	7	45	48	7,5	M8	3	14
260	36,5	345	313	348	280	365	9,3	15	8,2	34	9,3	33	36	10	M12	3	34
325	40	415	380	413	342	430	9,3	15	8,2	34	9,3	33	36	10	M12	3	34
395	42,5	486	450	488	415	505	9,3	15	8,2	46	9,3	45	48	7,5	M12	3	34
460	46	560	520	563	482	580	9,3	15	8,2	46	9,3	45	48	7,5	M12	3	34

	Designation	Rigidity					
		Bearing position[6]			Rolling element set		
d		axial c_{aL} kN/µm	radial c_{rL} kN/µm	Tilting rigidity c_{kL} kNm/mrad	axial c_{aL} kN/µm	radial c_{rL} kN/µm	Tilting rigidity c_{kL} kNm/mrad
100	**ZKLDF100**	1,2	0,35	3,6	2,2	0,35	5
120	**ZKLDF120**	1,5	0,4	5,5	2,5	0,4	8
150	**ZKLDF150**	1,7	0,4	7,8	2,9	0,4	12
180	**ZKLDF180**	1,9	0,5	10,7	2,8	0,5	16
200	**ZKLDF200**	2,5	0,6	17,5	3,7	0,6	26
260	**ZKLDF260**	3,2	0,7	40	4,7	0,7	54
325	**ZKLDF325**	4	0,8	60	5,4	0,8	90
395	**ZKLDF395**	4,5	0,9	100	6,3	0,9	148
460	**ZKLDF460**	5,3	1,1	175	7,1	1,1	223

Axial/radial bearings

Double direction
With incremental angular measuring system

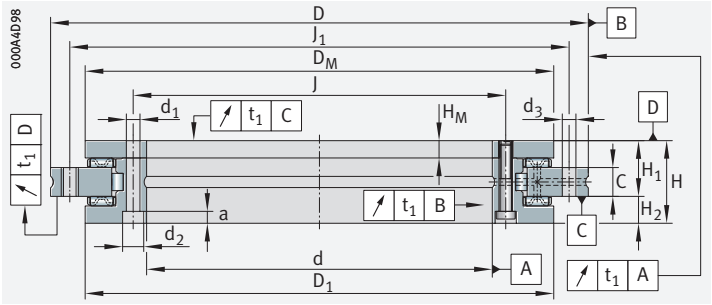

YRTCM

d = 150 – 460 mm

Main dimensions				Basic load ratings				Fatigue limit load		Limiting speed		Mass	Designation
				axial		radial		axial	radial				X-life ➤ *1338*
d		D	H	dyn. C_a	stat. C_{0a}	dyn. C_r	stat. C_{0r}	C_{ua}	C_{ur}	Electronic evaluation system and bearing n_G	Reference travel n_{Ref}	m	
				kN	kN	kN	kN	kN	kN	min^{-1}	min^{-1}	≈ kg	
150	0/–0,013	240 0/–0,015	41[6]	128	650	74	146	65	22,1	800	–	6,4	**YRTCM150-XL**[7]
180	0/–0,013	280 0/–0,018	44[6]	134	730	100	200	69	29,5	600	–	7,7	**YRTCM180-XL**[7]
200	0/–0,015	300 0/–0,018	45	147	850	123	275	78	39,5	450	–	9,7	**YRTCM200-XL**[7]
260	0/–0,018	385 0/–0,02	55	168	1 090	140	355	94	47	300	–	18,3	**YRTCM260-XL**
325	0/–0,023	450 0/–0,023	60	247	1 900	183	530	164	62	200	–	25	**YRTCM325-XL**
395	0/–0,023	525 0/–0,028	65	265	2 190	200	640	180	71	200	–	33	**YRTCM395-XL**
460	0/–0,023	600 0/–0,028	70	290	2 550	265	880	201	96	150	–	45	**YRTCM460-XL**

medias *https://www.schaeffler.de/std/1F9A*

① Two retaining screws; ② Screw counterbores open (in the L-section ring to the bearing bore), bearing inside diameter is unsupported in this area

1) Including retaining screws or threaded extraction holes.

2) Diameter of inner ring for design of adjacent construction.

3) Diameter of dimensional scale on shaft locating washer.

4) Attention!
For fixing holes in the adjacent construction. Observe the pitch of the bearing holes.

5) Tightening torque for screws to DIN EN ISO 4762, grade 10.9.

6) Attention!
H and H1 are 1 mm higher than standard bearing YRT.

7) The measuring head cannot be mounted between the fixing holes or the heads of the fixing screws. Two holes for fixing screws therefore remain unused in the bearing outer ring.

8) Rigidity values taking account of the rolling element set, the deformation of the bearing rings and the screw connections. For explanations TPI 120.

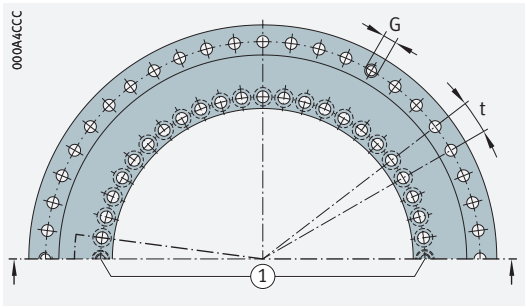

Hole pattern

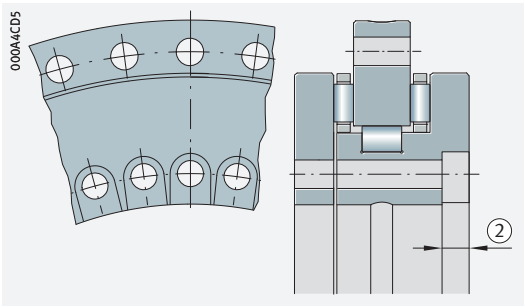

For YRTCM325

Dimensions								Fixing holes						Pitch[1]		Threaded extraction hole		Screw tightening torque
								Inner ring				Outer ring						
d	H_1	H_M	C	D_1[2] max.	D_M[3]	J	J_1	d_1	d_2	a	Quantity[4]	d_3	Quantity[4]	n	t °	G	Quantity	M_A[5] Nm
150	27[6]	10	12	213,82	214,5	165	225	7	11	6,2	34	7	33	36	10	M8	3	14
180	30[6]	10	15	244,38	245,1	194	260	7	11	6,2	46	7	45	48	7,5	M8	3	14
200	30	10	15	274,4	271,12	215	285	7	11	6,2	46	7	45	48	7,5	M8	3	14
260	36,5	13,5	18	347	343,69	280	365	9,3	15	8,2	34	9,3	33	36	10	M12	3	34
325	40	15	20	415,1	412,45	342	430	9,3	15	8,2	34	9,3	33	36	10	M12	3	34
395	42,5	17,5	20	487,7	485,02	415	505	9,3	15	8,2	46	9,3	45	48	7,5	M12	3	34
460	46	19	22	560,9	557,6	482	580	9,3	15	8,2	46	9,3	45	48	7,5	M12	3	34

	Designation	Rigidity					
		Bearing position[8]			Rolling element set		
d		axial c_{aL} kN/µm	radial c_{rL} kN/µm	Tilting rigidity c_{kL} kNm/mrad	axial c_{aL} kN/µm	radial c_{rL} kN/µm	Tilting rigidity c_{kL} kNm/mrad
150	**YRTCM150-XL**[7]	3,8	3,2	18,6	12	4,8	61
180	**YRTCM180-XL**[7]	4,7	3,6	29	13,5	5,3	88,5
200	**YRTCM200-XL**[7]	4,9	4,1	40	15,5	6,2	128
260	**YRTCM260-XL**	6,9	5,3	104	19	8,1	265
325	**YRTCM325-XL**	7,1	6,3	159	33	9,9	633
395	**YRTCM395-XL**	9,9	5,8	280	37	13	1 002
460	**YRTCM460-XL**	12	6,5	429	43	17	1 543

Axial/radial bearings

Double direction
With incremental angular measuring system

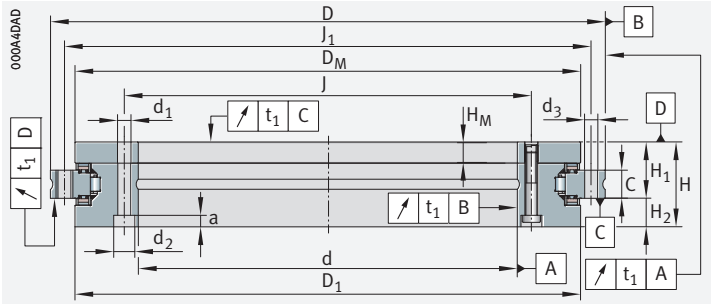

YRTSM

d = 200 – 460 mm

Main dimensions			Basic load ratings				Fatigue limit load		Limiting speed		Mass	Designation
			axial		radial		axial	radial	Electronic evaluation system and bearing	Reference travel		
d	D	H	dyn. C_a	stat. C_{0a}	dyn. C_r	stat. C_{0r}	C_{ua}	C_{ur}	n_G	n_{Ref}	m	
			kN	kN	kN	kN	kN	kN	min^{-1}	min^{-1}	≈ kg	
200 0/–0,015	300 0/–0,018	45	155	840	94	226	93	32	1 160	30	9,7	**YRTSM200**[6]
260 0/–0,018	385 0/–0,02	55	173	1 050	110	305	108	40	910	25	18,3	**YRTSM260**
325 0/–0,023	450 0/–0,023	60	191	1 260	109	320	122	43	760	25	25	**YRTSM325**
395 0/–0,023	525 0/–0,028	65	214	1 540	121	390	142	49,5	650	15	33	**YRTSM395**
460 0/–0,023	600 0/–0,028	70	221	1 690	168	570	149	65	560	15	45	**YRTSM460**

medias *https://www.schaeffler.de/std/1F9A*

① Two retaining screws; ② Screw counterbores open (in the L-section ring to the bearing bore), bearing inside diameter is unsupported in this area

1) Including retaining screws or threaded extraction holes.

2) Diameter of inner ring for design of adjacent construction.

3) Diameter of dimensional scale on shaft locating washer.

4) Attention!
For fixing holes in the adjacent construction. Observe the pitch of the bearing holes.

5) Tightening torque for screws to DIN EN ISO 4762, grade 10.9.

6) The measuring head cannot be mounted between the fixing holes or the heads of the fixing screws. Two holes for fixing screws therefore remain unused in the bearing outer ring.

7) Rigidity values taking account of the rolling element set, the deformation of the bearing rings and the screw connections. For explanations TPI 120.

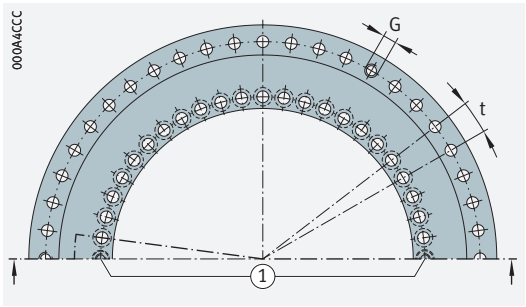

Hole pattern

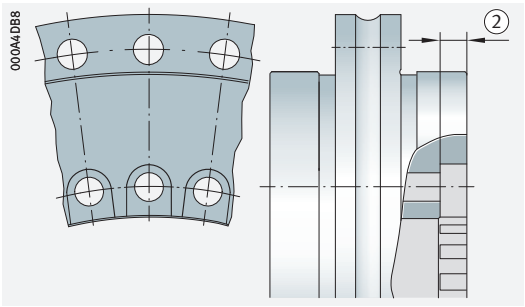

For YRTSM325

Dimensions								Fixing holes						Pitch[1]		Threaded extraction hole		Screw tightening torque
								Inner ring				Outer ring						
d	H_1	H_M	C	D_1[2] max.	D_M[3]	J	J_1	d_1	d_2	a	Quantity[4]	d_3	Quantity[4]	n	t °	G	Quantity	M_A[5] Nm
200	30	10	15	274,4	271,12	215	285	7	11	6,2	46	7	45	48	7,5	M8	3	14
260	36,5	13,5	18	347	343,69	280	365	9,3	15	8,2	34	9,3	33	36	10	M12	3	34
325	40	15	20	415,1	412,45	342	430	9,3	15	8,2	34	9,3	33	36	10	M12	3	34
395	42,5	17,5	20	487,7	485,02	415	505	9,3	15	8,2	46	9,3	45	48	7,5	M12	3	34
460	46	19	22	560,9	557,6	482	580	9,3	15	8,2	46	9,3	45	48	7,5	M12	3	34

	Designation	Rigidity					
		Bearing position[7]			Rolling element set		
d		axial c_{aL} kN/µm	radial c_{rL} kN/µm	Tilting rigidity c_{kL} kNm/mrad	axial c_{aL} kN/µm	radial c_{rL} kN/µm	Tilting rigidity c_{kL} kNm/mrad
200	**YRTSM200**[6]	4	1,2	29	13,6	3,9	101
260	**YRTSM260**	5,4	1,6	67	16,8	5,8	201
325	**YRTSM325**	6,6	1,8	115	19,9	7,1	350
395	**YRTSM395**	7,8	2	195	23,4	8,7	582
460	**YRTSM460**	8,9	1,8	280	25,4	9,5	843

Axial/radial bearings

Double direction
With absolute value angular measuring system

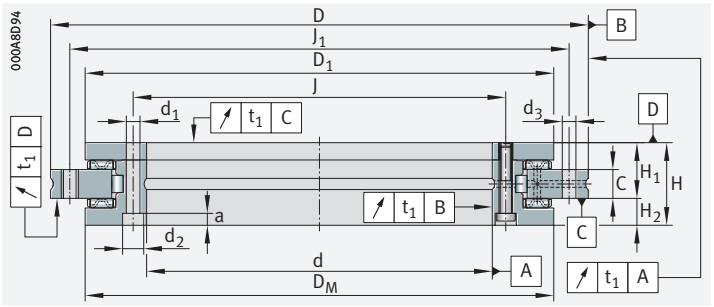

YRTCMA

d = 150 – 460 mm

Main dimensions			Basic load ratings				Fatigue limit load		Limiting speed[1]	Mass	Designation
			axial		radial		axial	radial			X-life ➤ 1338
d	D	H	dyn. C_a	stat. C_{0a}	dyn. C_r	stat. C_{0r}	C_{ua}	C_{ur}	n_G	m	
			kN	kN	kN	kN	kN	kN	min^{-1}	≈ kg	
150 0/–0,013	240 0/–0,015	47	128	650	74	146	65	22,1	800	6,7	**YRTCMA150-XL**
180 0/–0,013	280 0/–0,018	50	134	730	100	200	69	29,5	600	8,5	**YRTCMA180-XL**
200 0/–0,015	300 0/–0,018	51[7]	147	850	123	275	78	39,5	450	10,7	**YRTCMA200-XL**
260 0/–0,018	385 0/–0,02	57,5[7]	168	1 090	140	355	94	47	300	18,7	**YRTCMA260-XL**
325 0/–0,023	450 0/–0,023	61	247	1 900	183	530	164	62	200	25	**YRTCMA325-XL**
395 0/–0,023	525 0/–0,028	65	265	2 190	200	640	180	71	200	33	**YRTCMA395-XL**
460 0/–0,023	600 0/–0,028	70	290	2 550	265	880	201	96	150	45	**YRTCMA460-XL**

medias *https://www.schaeffler.de/std/1F9A*

① Two retaining screws; ② Screw counterbores open (in the L-section ring to the bearing bore), bearing inside diameter is unsupported in this area; ③ Shaft locating washer; ④ Inner ring

1) For high operating durations or continuous operation, please contact us.

2) Including retaining screws or threaded extraction holes.

3) Diameter of shaft locating washer for design of adjacent construction.

4) Diameter of dimensional scale on inner ring.

5) Attention!
For fixing holes in the adjacent construction. Observe the pitch of the bearing holes.

6) Tightening torque for screws to DIN EN ISO 4762, grade 10.9.

7) Dimension differs from the axial/radial bearing YRT.

8) Rigidity values taking account of the rolling element set, the deformation of the bearing rings and the screw connections. For explanations TPI 120.

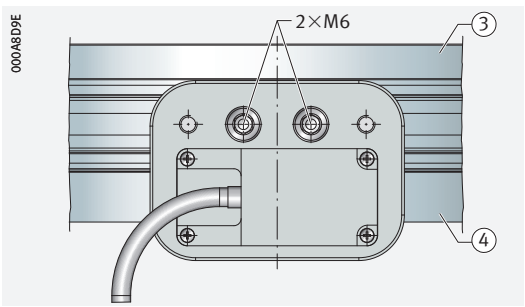

Measuring head suitable for radial screw mounting

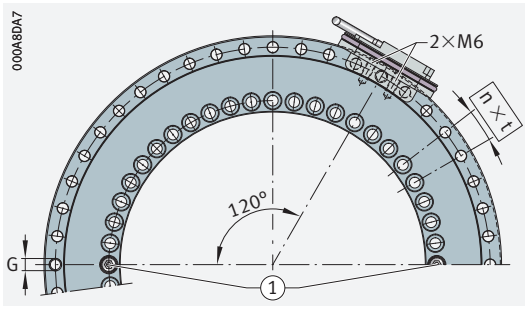

Hole pattern, measuring head suitable for radial screw mounting

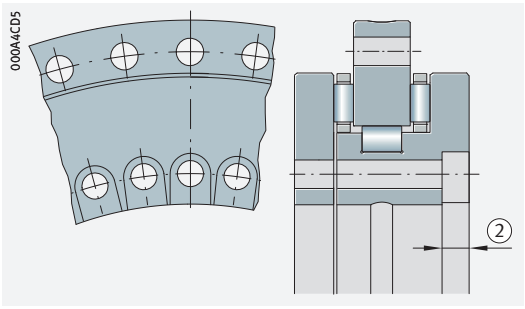

For YRTCMA325

Dimensions							Fixing holes						Pitch[2]		Threaded extraction hole		Screw tightening torque
							Inner ring				Outer ring						
d	H_1	C	D_1[3]	D_M[4] max.	J	J_1	d_1	d_2	a	Quantity[5]	d_3	Quantity[5]	n	t °	G	Quantity	M_A[6] Nm
150	26	12	214	214,5	165	225	7	11	6,2	34	7	33	36	10	M8	3	14
180	29	15	244	245,1	194	260	7	11	6,2	46	7	45	48	7,5	M8	3	14
200	30	15	274	274,4	215	285	7	11	6,2	46	7	45	48	7,5	M8	3	14
260	36,5	18	345	347	280	365	9,3	15	8,2	34	9,3	33	36	10	M12	3	34
325	40	20	415	415,1	342	430	9,3	15	8,2	34	9,3	33	36	10	M12	3	34
395	42,5	20	486	487,7	415	505	9,3	15	8,2	46	9,3	45	48	7,5	M12	3	34
460	46	22	560	560,9	482	580	9,3	15	8,2	46	9,3	45	48	7,5	M12	3	34

	Designation	Rigidity					
		Bearing position[8]			Rolling element set		
d		axial c_{aL} kN/µm	radial c_{rL} kN/µm	Tilting rigidity c_{kL} kNm/mrad	axial c_{aL} kN/µm	radial c_{rL} kN/µm	Tilting rigidity c_{kL} kNm/mrad
150	**YRTCMA150-XL**	3,8	3,2	18,6	12	4,8	61
180	**YRTCMA180-XL**	4,7	3,6	29	13,5	5,3	88,5
200	**YRTCMA200-XL**	4,9	4,1	40	15,5	6,2	128
260	**YRTCMA260-XL**	6,9	5,3	104	19	8,1	265
325	**YRTCMA325-XL**	7,1	6,3	159	33	9,9	633
395	**YRTCMA395-XL**	9,9	5,8	280	37	13	1 002
460	**YRTCMA460-XL**	12	6,5	429	43	17	1 543

Axial/radial bearings

Double direction
With absolute value angular measuring system

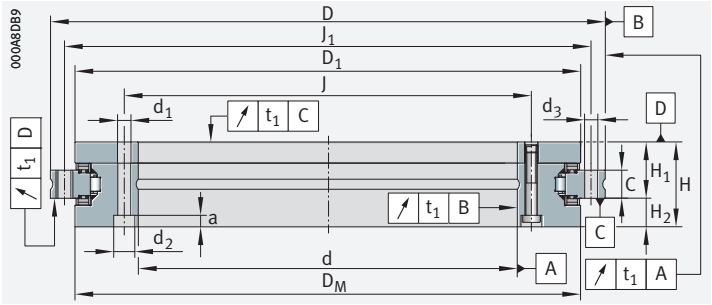

YRTSMA

d = 200 – 460 mm

Main dimensions			Basic load ratings				Fatigue limit load		Limiting speed[1]	Mass	Designation
			axial		radial		axial	radial			
d	D	H	dyn. C_a	stat. C_{0a}	dyn. C_r	stat. C_{0r}	C_{ua}	C_{ur}	n_G	m	
			kN	kN	kN	kN	kN	kN	min^{-1}	≈ kg	
200 0/–0,015	300 0/–0,018	51[7]	155	840	94	226	93	32	1 160	10,7	**YRTSMA200**
260 0/–0,018	385 0/–0,02	57,5[7]	173	1 050	110	305	108	40	910	18,7	**YRTSMA260**
325 0/–0,023	450 0/–0,023	61[7]	191	1 260	109	320	122	43	760	25	**YRTSMA325**
395 0/–0,023	525 0/–0,028	65	214	1 540	121	390	142	49,5	650	33	**YRTSMA395**
460 0/–0,023	600 0/–0,028	70	221	1 690	168	570	149	65	560	45	**YRTSMA460**

medias *https://www.schaeffler.de/std/1F9A*

① Two retaining screws; ② Screw counterbores open (in the L-section ring to the bearing bore), bearing inside diameter is unsupported in this area; ③ Shaft locating washer; ④ Inner ring

1) For high operating durations or continuous operation, please contact us.

2) Including retaining screws or threaded extraction holes.

3) Diameter of shaft locating washer for design of adjacent construction.

4) Diameter of dimensional scale on inner ring.

5) Attention!
For fixing holes in the adjacent construction. Observe the pitch of the bearing holes.

6) Tightening torque for screws to DIN EN ISO 4762, grade 10.9.

7) Dimension differs from the axial/radial bearing YRTS.

8) Rigidity values taking account of the rolling element set, the deformation of the bearing rings and the screw connections. For explanations TPI 120.

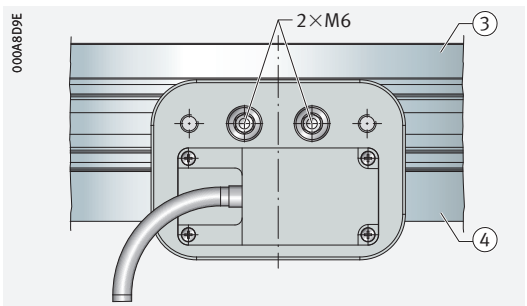

Measuring head suitable for radial screw mounting

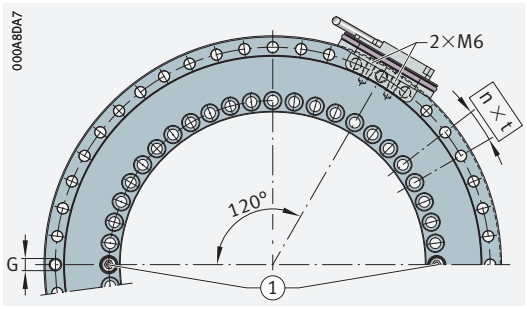

Hole pattern, measuring head suitable for radial screw mounting

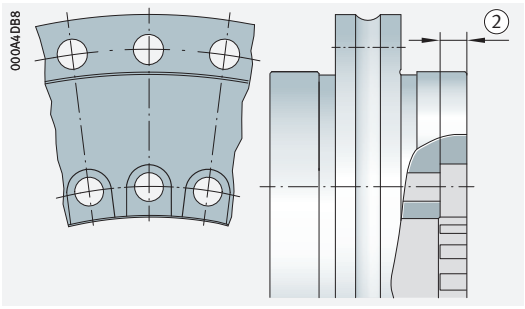

For YRTSMA325

Dimensions							Fixing holes						Pitch[2]		Threaded extraction hole		Screw tightening torque
							Inner ring				Outer ring						
d	H_1	C	D_1[3]	D_M[4] max.	J	J_1	d_1	d_2	a	Quantity[5]	d_3	Quantity[5]	n	t °	G	Quantity	M_A[6] Nm
200	30	15	274	274,4	215	285	7	11	6,2	46	7	45	48	7,5	M8	3	14
260	36,5	18	345	347	280	365	9,3	15	8,2	34	9,3	33	36	10	M12	3	34
325	40	20	415	415,1	342	430	9,3	15	8,2	34	9,3	33	36	10	M12	3	34
395	42,5	20	486	487,7	415	505	9,3	15	8,2	46	9,3	45	48	7,5	M12	3	34
460	46	22	560	560,9	482	580	9,3	15	8,2	46	9,3	45	48	7,5	M12	3	34

	Designation	Rigidity					
		Bearing position[8]			Rolling element set		
d		axial c_{aL} kN/µm	radial c_{rL} kN/µm	Tilting rigidity c_{kL} kNm/mrad	axial c_{aL} kN/µm	radial c_{rL} kN/µm	Tilting rigidity c_{kL} kNm/mrad
200	**YRTSMA200**	4	1,2	29	13,6	3,9	101
260	**YRTSMA260**	5,4	1,6	67	16,8	5,8	201
325	**YRTSMA325**	6,6	1,8	115	19,9	7,1	350
395	**YRTSMA395**	7,8	2	195	23,4	8,7	582
460	**YRTSMA460**	8,9	1,8	280	25,4	9,5	843

4 App for super precision bearings

4.1 PrecisionDesk

PrecisionDesk simplifies bearing selection and assists in the mounting of bearing arrangement components

The free-of-charge Schaeffler app PrecisionDesk for super precision bearings includes services for rotary and linear bearings of a high precision design ➤ 1360| 1. It assists fitters and engineers in the selection and mounting of bearing arrangement components.

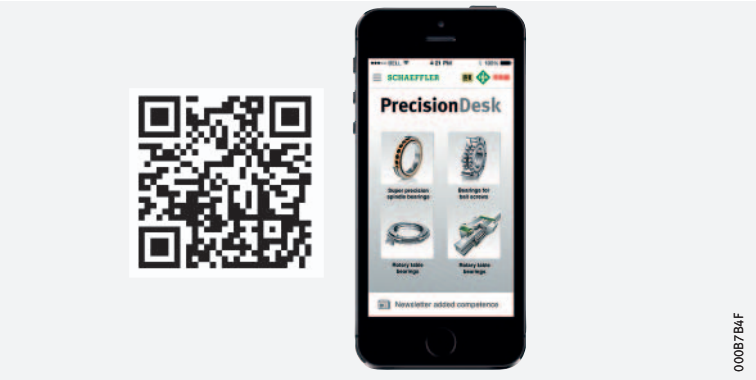

1 PrecisionDesk for super precision bearings

Advantages

The advantage for the user is that the data can be accessed from any smartphone. For example, the app can be used to call off bearing-specific measurement records for spindle and rotary table bearings directly and store or send these for the purposes of documentation. For spindle bearings, it is possible to create electronic, bearing-specific data sets in the .csv format and use these, for example, for a logistics system.
The app offers Schaeffler customers the possibility of monitoring their own inventory and improving quality in mounting. With such a service tool, Schaeffler is a pioneer in the market.

Access via DMC

Scanning the data matrix code (DMC) on the bearing or the bearing packaging gives access to the scope of performance of the program ➤ 1360| 2.



2 Data matrix code on rolling bearing

Scope of performance

The scope of performance of the app comprises ➤*1361*|*3*:

- checking of data matrix codes (anti-piracy protection)
- measurement records for spindle and rotary table bearings
- recommendations for mounting
- performance data

3
Scope of performance of PrecisionDesk



000B7B74

Measurement records for spindle bearings

The measurement records which can be generated contain the following ➤*1361*|*4*:

- bearing ID
- designation
- date of manufacture
- actual value codes (bore diameter, outside diameter)
- width deviation
- contact angle
- overhang

4
Measurement record for spindle bearings



000B7B84

Recommendations for mounting

- Correct grease quantity
- Grease distribution cycle
- Universal bearing sets
- Permissible heating temperatures
- Designation and marking

Performance data

- Catalogue information
- Additional product information
- Direct access to Schaeffler Library

The PrecisionDesk app can be used on Android, IOS and Windows-based operating systems and can be downloaded from the corresponding app stores *https://www.schaeffler.de/std/1D59*.

Track rollers



Matrix for bearing preselection 1364

1 Yoke type roller bearing track rollers, stud type roller bearing track rollers 1366

1.1 Bearing design 1366
1.2 Load carrying capacity 1377
1.3 Angular misalignment 1378
1.4 Lubrication 1379
1.5 Sealing 1382
1.6 Speeds 1382
1.7 Noise 1383
1.8 Temperature range 1383
1.9 Cages 1384
1.10 Internal clearance 1384
1.11 Dimensions, tolerances 1385
1.12 Suffixes 1385
1.13 Structure of bearing designation 1386
1.14 Dimensioning 1387
1.15 Minimum load 1389
1.16 Design of bearing arrangements 1389

1.17 Mounting and dismounting 1398
1.18 Legal notice regarding data freshness 1401
1.19 Further information 1402
Product tables 1403
Yoke type roller bearing track rollers without axial guidance, open 1403
Yoke type roller bearing track rollers without axial guidance, sealed 1404
Yoke type roller bearing track rollers with axial guidance 1405
Yoke type roller bearing track rollers with axial guidance, sealed 1406
Yoke type roller bearing track rollers with optimised INA profile 1408
Stud type needle roller bearing track rollers with axial guidance 1410
Stud type cylindrical roller bearing track rollers with axial guidance 1414

2 Yoke type ball bearing track rollers, stud type ball bearing track rollers 1416

2.1 Bearing design 1416
2.2 Load carrying capacity 1420
2.3 Compensation of angular misalignments 1420
2.4 Lubrication 1421
2.5 Sealing 1421
2.6 Speeds 1422
2.7 Noise 1422
2.8 Temperature range 1422
2.9 Cages 1422
2.10 Internal clearance 1423
2.11 Dimensions, tolerances 1423
2.12 Suffixes 1423
2.13 Structure of bearing designation 1424
2.14 Dimensioning 1424
2.15 Minimum load 1425
2.16 Design of bearing arrangements 1425
2.17 Mounting and dismounting 1426
2.18 Legal notice regarding data freshness 1427
2.19 Further information 1427
Product tables 1428
Yoke type ball bearing track rollers, single row, sealed 1428
Yoke type ball bearing track rollers, double row, sealed 1429
Stud type ball bearing track rollers, sealed 1432
Stud type ball bearing track rollers with eccentric collar, sealed 1434
Track rollers with plastic outer tyre, sealed 1435



Matrix for bearing preselection

The matrix gives an overview of the types and design features.

It can be used to make a preliminary assessment of whether a bearing is fundamentally suitable for the envisaged application.

The additional information provided in the product chapter (see column "detailed information") and in the Technical principles must, however, be observed in addition to this overview in selection of the bearing.

Design features and suitability			Yoke type roller bearing track rollers			
+++ extremely suitable ++ highly suitable + suitable (+) suitable with restrictions – not suitable/not applicable ✓ available			without axial guidance	with axial guidance	with axial guidance, INA profile, sealed	detailed information ➤ 1366
Load carrying capacity	radial		+++	+++	+++	➤ 1377|1.2
	axial, one direction[1]		(+)	(+)	(+)	➤ 1377|1.2
	axial, both directions[1]		(+)	(+)	(+)	➤ 1377|1.2
	moments		–	–	–	
Compensation of angular misalignments	static		++	++	++	➤ 1378|1.3
	dynamic		+	+	+	➤ 1378|1.3
Bearing design	cylindrical bore		✓	✓	✓	➤ 1366|1.1
	tapered bore		–	–	–	
	separable		✓	✓[2]	–	➤ 1366|1.1
Lubrication	greased		✓	✓	✓	➤ 1379|1.4
Sealing	open		✓	–	–	➤ 1382|1.5
	non-contact		–	✓	✓	➤ 1382|1.5
	contact		✓	✓	✓	➤ 1382|1.5
Operating temperature in °C	from to		–30 +140[3]	–30 +140[3]	–30 +140[3]	➤ 1383|1.8
Suitability for	high speeds		++	++	++	➤ 1382|1.6
	high running accuracy		++	++	++	➤ 1385|1.11
	low-noise running		+	+	+	➤ 1383|1.7 ➤ 27
	high rigidity		+++	+++	+++	➤ 54
	reduced friction		++	++	++	➤ 56
	length compensation within bearing		–	–	–	➤ 25
	non-locating bearing arrangement		–	–	–	➤ 141
	locating bearing arrangement		–	–	–	➤ 141
X-life bearings		X-life	–	–	✓	➤ 1367
Outside diameter D in mm	from to		16 90	5 310	35 100	➤ 1403
Product tables	from page ➤		1403	1405	1408	

[1] Support of axial forces due to tilting and skewed running ➤ 1378|1.3 and ➤ 1420|2.3

[2] Inner rings or open design only

[3] Valid only for yoke or stud type roller bearing track rollers with a metal cage or full complement roller designs, if unsealed or with a gap or labyrinth seal. Other values ➤ 1383|▦ 8

	Stud type needle roller bearing track rollers with axial guidance	Stud type cylindrical roller bearing track rollers with axial guidance	detailed information ➤ 1366	Ball bearing track rollers: single row	double row	stud type ball bearing track rollers	with plastic outer tyre	detailed information ➤ 1416	
	+++	+++	➤ 1377|1.2	+++	+++	+++	+++	➤ 1420|2.2	F_r
	(+)	(+)	➤ 1377|1.2	+	+	+	+	➤ 1420|2.2	F_a
	(+)	(+)	➤ 1377|1.2	+	+	+	+	➤ 1420|2.2	F_a
	–	–		–	–	–	–		M
	++	++	➤ 1378|1.3	++	++	++	++	➤ 1420|2.3	
	+	+	➤ 1378|1.3	++	++	++	++	➤ 1420|2.3	
	✓	✓	➤ 1366|1.1	✓	✓	✓	✓	➤ 1416|2.1	
	–	–		–	–	–	–		
	–	–	➤ 1366|1.1	–	–	–	–	➤ 1416|2.1	
	✓	✓	➤ 1379|1.4	✓	✓	✓	✓	➤ 1421|2.4	
	–	–	➤ 1382|1.5	–	–	–	–	➤ 1421|2.5	
	✓	✓	➤ 1382|1.5	–	✓	✓	✓	➤ 1421|2.5	
	✓	✓	➤ 1382|1.5	✓	✓	✓	✓	➤ 1421|2.5	
	–30 +140[3]	–30 +140[3]	➤ 1383|1.8	–20 +120	–20 +120	–20 +120	–20 +80	➤ 1422|2.8	
	++	++	➤ 1382|1.6	+++	+++	+++	+++	➤ 1422|2.6	n
	++	++	➤ 1385|1.11	++	++	++	++	➤ 1423|2.11 ➤ 115	
	+	+	➤ 1383|1.7 ➤ 27	+	+	+	+	➤ 1422|2.7 ➤ 27	
	++	++	➤ 54	+	+	+	+	➤ 54	
	++	++	➤ 56	+++	+++	+++	+++	➤ 56	
	–	–	➤ 25	–	–	–	–	➤ 25	
	–	–	➤ 141	–	–	–	–	➤ 141	
	–	–	➤ 141	–	–	–	–	➤ 141	
	–	✓	➤ 1371	–	✓	–	–	➤ 1419	X-life
	16 90	35 90	➤ 1410	13 90	17 100	35 80	27,5 46,8	➤ 1428	
	1410	1414		1428	1429	1432	1435		



1 Yoke type roller bearing track rollers, stud type roller bearing track rollers

Yoke and stud type roller bearing track rollers:

- are ready-to-fit needle or cylindrical roller bearings of single or double row design ➤*1368*|*2* to ➤*1373*|*14*
- are mounted on shafts or studs (yoke type track rollers) or supplied with a heavy-section roller stud with fixing thread and a mounting aid (stud type track rollers) ➤*1366*|*1*
- have particularly thick-walled outer rings with a crowned outside surface ➤*1366*|*1.1*
- can support high radial loads ➤*1377*|*1.2*
- tolerate axial loads which are due to small misalignment defects, skewed running or temporary contact running impacts ➤*1378*|*1.3*
- are available with or without an inner ring (yoke type track rollers)
- are produced with or without axial guidance of the outer ring (stud type track rollers are always produced with axial guidance)
- are open or sealed on both sides ➤*1382*|*1.5*
- are not mounted in a housing bore, but are supported on a flat mating track ➤*1366*|*1*
- can be adjusted to the mating track in the design with the eccentric collar, thus permitting, for example, larger manufacturing tolerances in the adjacent construction

1
Double row stud type track roller supported on a flat mating track

① *Mating track*

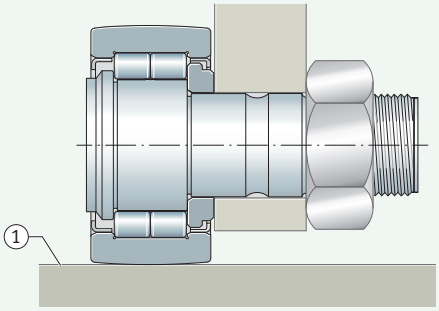

1.1 Bearing design

✎ *Design variants*

This range of yoke type track rollers comprises bearings:

- with or without an inner ring (without axial guidance) ➤*1368*|*2*, ➤*1368*|*3*
- with an inner ring (with axial guidance)
  - with cage ➤*1369*|*4*
  - full complement needle roller set ➤*1369*|*5*
  - full complement cylindrical roller set ➤*1370*|*6*
  - full complement cylindrical roller set, with central rib ➤*1370*|*7*

Stud type track rollers are available in the following designs:

- Without eccentric collar
  - with cage ➤*1371*|*8*
  - full complement needle roller set ➤*1372*|*9*
  - full complement cylindrical roller set ➤*1372*|*10*
  - full complement cylindrical roller set and with central rib ➤*1372*|*11*
- With eccentric collar
  - with cage ➤*1373*|*12*
  - full complement cylindrical roller set ➤*1373*|*13*
  - full complement cylindrical roller set and with central rib ➤*1373*|*14*

Yoke type track rollers (general)

The bearings have thick-walled outer rings and are mounted on shafts or studs

Yoke type track rollers are single or double row units mounted on shafts or studs ➤*1368*|*2* to ➤*1370*|*7*. They comprise thick-walled outer rings with a profiled outside surface and needle roller and cage assemblies or full complement needle roller or cylindrical roller sets. Yoke type track rollers can support high radial loads as well as axial loads arising from slight misalignment and skewed running. The bearings are available with or without an inner ring, with or without axial guidance and in sealed or open versions.

Typical applications

Proven areas of application of these products include cam gears, bed ways, conveying equipment and linear guidance systems.

Outside surface profile of the outer ring

The outside surface is predominantly crowned

Bearings with a crowned outside surface are predominantly used in practice since skewing usually occurs relative to the mating track and edge stresses must be avoided.

Radius of curvature

The radius of curvature of the outside surface is R = 500 mm. In the case of series NNTR..-2ZL, the radius is indicated in the product table.

Optimised INA profile

Yoke type track rollers NATR..-PP, NATV..-PP, NUTR and PWTR..-2RS have an outside surface with the optimised INA profile ➤*1374*. In yoke type track rollers with this curvature profile:



- the Hertzian pressure is lower ➤*1374*|*15*, ➤*1374*|*16*
- edge loading under tilting is lower ➤*1374*|*16*
- wear of the mating track is reduced ➤*1375*|*18*, ➤*1375*|*19*
- the operating life of the mating track is extended ➤*1375*|*17*
- the rigidity in the outer ring contact is increased ➤*1376*|*20*

X-life premium quality

X-life

Series PWTR is supplied as an X-life design. Due to a modified material and the optimised raceway geometry of the outer rings, the basic rating life has been increased by up to 30%. The static and dynamic load carrying capacity has also been increased. At the same time, the stress placed on the mating track has been reduced as a result of the optimised surface profile and its improved surface quality.

Lower operating costs, higher machine availability

In conclusion, these advantages improve the overall cost-efficiency of the bearing position significantly and thus bring about a sustainable increase in the efficiency of the machine and equipment.

Suffix XL

X-life yoke type track rollers include the suffix XL in the designation.

✎ The raceway must be designed as a rolling bearing raceway

Yoke type track rollers without inner ring, without axial guidance

Yoke type track rollers RSTO and RNA22..-2RSR do not have an inner ring ➤*1368*|*2*. Depending on the design, yoke type track rollers are also available as sealed versions ➤*1382*|*1.5*. They are particularly compact but require a hardened and ground raceway on the shaft or stud. Series RSTO is not self-retaining, which means that the outer ring and the needle roller and cage assembly can be fitted independently of each other. This gives simplified mounting of the bearings.

The rolling elements are guided by the cage. These designs do not have axial guidance of the outer ring. Axial guidance of the outer ring and needle roller and cage assembly (for RSTO only) must be provided in the adjacent construction.

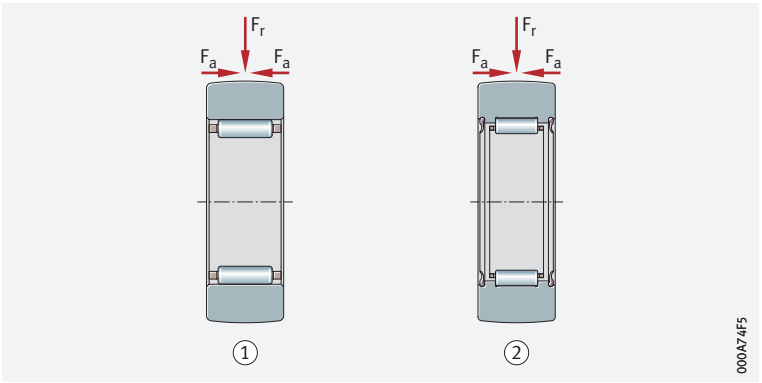

2
Yoke type track rollers without inner ring, without axial guidance, open or sealed on both sides

F_r = *radial load*
F_a = *axial load*

① *Open (RSTO)*
② *Contact seals (RNA22..-2RSR)*

Yoke type track rollers with inner ring, without axial guidance

Yoke type track rollers STO and NA22..-2RSR have an inner ring ➤*1368*|*3*. Depending on the design, yoke type track rollers are also available as sealed versions ➤*1382*|*1.5*. Bearings with an inner ring are used if the shaft or stud does not have a hardened and ground raceway. Series STO is not self-retaining. This means that the outer ring, needle roller and cage assembly and the inner ring can be fitted independently of each other. This gives simplified mounting of the bearings.

The rolling elements are guided by the cage. These designs do not have axial guidance of the outer ring. Axial guidance of the outer ring and needle roller and cage assembly (for STO only) must be provided in the adjacent construction.

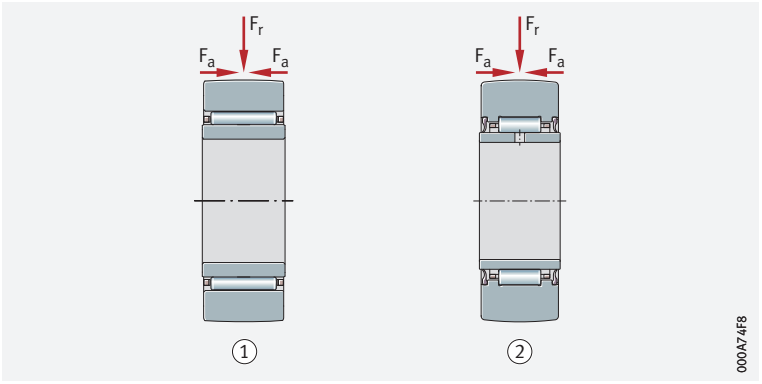

3
Yoke type track rollers with inner ring, without axial guidance, open or sealed on both sides

F_r = *radial load*
F_a = *axial load*

① *Open (STO)*
② *Contact seals (NA22..-2RSR)*

Yoke type track rollers with inner ring, with axial guidance

Yoke type track rollers with an inner ring are used if the shaft or stud does not have a hardened and ground raceway.

Designs

The series NATR and NATR..-PP have a cage ➤*1369*|*4*. The series NATV and NATV..-PP have a full complement needle roller set, while yoke type track rollers NUTR have a full complement cylindrical roller set ➤*1369*|*5* and ➤*1370*|*6*. Yoke type track rollers PWTR..-2RS and NNTR..-2ZL have a full complement cylindrical roller set and a central rib ➤*1370*|*7*. Depending on the design, yoke type track rollers are also available as sealed versions ➤*1382*|*1.5*.

Bearings without a cage have the largest possible number of rolling elements and therefore have particularly high load carrying capacity. Due to the kinematic conditions, however, the speeds achievable with these bearings are somewhat lower than those achievable with the cage-guided yoke type track rollers.

Axial guidance of outer ring

The type of guidance is dependent on the series

In NATR and NATV, axial guidance is provided directly by contact washers, while in NATR..-PP and NATV..-PP this is provided by contact washers and plastic axial plain washers. In NUTR, the outer ring is guided by the rolling elements, in PWTR..-2RS and NNTR..-2ZL it is guided by the central rib and the rolling elements.

Corrosion protection

Corrosion protection by Corrotect

Series PWTR..-2RS-RR is protected against corrosion by the special Cr(VI)-free coating Corrotect ➤*1376*. These bearings have the suffix RR.

4

Yoke type track rollers with inner ring, with cage, with axial guidance, open or sealed on both sides

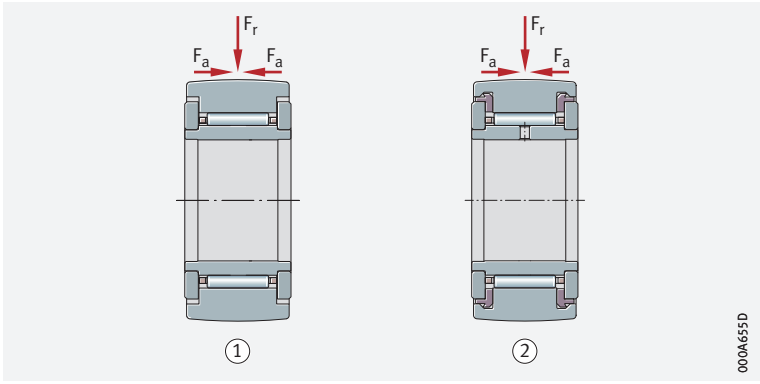

F_r = *radial load*
F_a = *axial load*

① *Gap seals (NATR)*
② *Plastic axial plain washers (NATR..-PP)*

5

Yoke type track rollers with inner ring, full complement needle roller set, with axial guidance, open or sealed on both sides

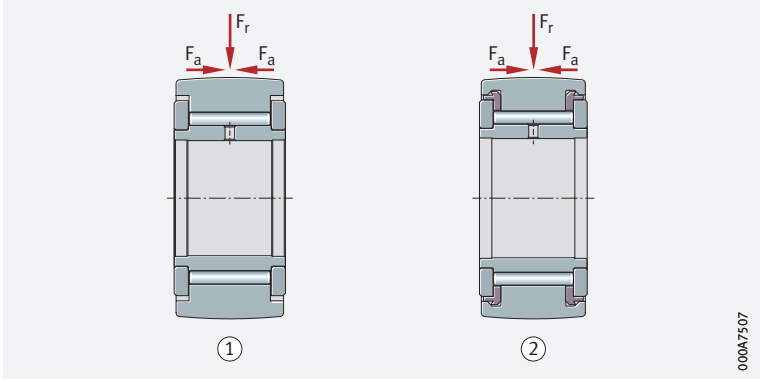

F_r = *radial load*
F_a = *axial load*

① *Gap seals (NATV)*
② *Plastic axial plain washers (NATV..-PP)*

6
Yoke type track roller with inner ring, full complement cylindrical roller set, with axial guidance, sealed on both sides

F_r = *radial load*
F_a = *axial load*

① *Labyrinth seals (NUTR)*

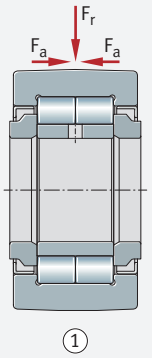

7
Yoke type track rollers with inner ring, full complement cylindrical roller set, with central rib, with axial guidance, sealed on both sides

F_r = *radial load*
F_a = *axial load*

① *Protected lip seals (PWTR..-2RS)*
② *Contact washers with lamellar ring (NNTR..-2ZL)*

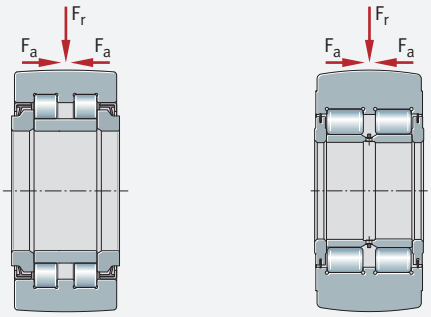

Stud type track rollers (general)

The bearings have thick-walled outer rings and a heavy-section roller stud

Stud type track rollers are similar in their construction to single and double row yoke type track rollers with axial guidance, except that the raceway is formed by a heavy-section roller stud with a fixing thread and type-dependent mounting aid, and with a type-dependent relubrication facility. Due to the thick-walled outer ring with profiled outside surface and the rolling element set, they can support high radial loads as well as axial loads arising from slight misalignment and skewed running. The stud type track rollers are available with or without an eccentric collar ➤*1371*|*8* to ➤*1373*|*14*.

Typical applications

Proven areas of application of these products include cam gears, bed ways, conveying equipment and linear guidance systems.

Outside surface profile of the outer ring

The outside surface is crowned

Stud type track rollers with a crowned outside surface are predominantly used since skewing usually occurs relative to the mating track and edge stresses must be avoided.

Radius of curvature

In series KR, the radius of curvature is R = 500 mm. The series KR..-PP, KRE..-PP, KRV..-PP, NUKR, NUKRE, PWKR..-2RS and PWKRE..-2RS have an outside surface with the optimised INA profile.

Optimised INA profile

In stud type track rollers with the optimised INA profile:

- the Hertzian pressure is lower ➤*1374*|*15*, ➤*1374*|*16*
- edge loading under tilting is lower ➤*1374*|*16*
- wear of the mating track is reduced ➤*1375*|*18*, ➤*1375*|*19*
- the operating life of the mating track is extended ➤*1375*|*17*
- the rigidity in the outer ring contact is increased ➤*1376*|*20*

X-life premium quality

Stud type track rollers PWKR(E) are supplied in the X-life design. Due to a modified material and the optimised raceway geometry of the outer rings, the basic rating life has been increased by up to 30%. The static and dynamic load carrying capacity has also been increased. At the same time, the stress placed on the mating track has been reduced as a result of the optimised surface profile and its improved surface quality.

Lower operating costs, higher machine availability

In conclusion, these advantages improve the overall cost-efficiency of the bearing position significantly and thus bring about a sustainable increase in the efficiency of the machine and equipment.

Suffix XL

X-life stud type track rollers include the suffix XL in the designation.

Stud type track rollers without eccentric collar

Stud type track rollers without an eccentric collar do not have a defined adjustment facility in relation to the mating track on the adjacent construction in mounting of the bearings.

Designs

The series KR and KR..-PP have a cage, the design KRV..-PP has a full complement needle roller set. Series NUKR has a full complement cylindrical roller set, series PWKR..-2RS has a full complement cylindrical roller set and a central rib ➤*1371*|*8* to ➤*1372*|*11*.

Bearings without a cage have the largest possible number of rolling elements and therefore have particularly high load carrying capacity. Due to the kinematic conditions, however, the speeds achievable with these bearings are somewhat lower than those achievable with the cage-guided stud type track rollers.

Axial guidance of outer ring

The type of guidance is dependent on the series

In KR, axial guidance is provided directly by the contact flange and contact washer, while in KR..-PP and KRV..-PP this is provided by plastic axial plain washers, the contact flange and contact washer ➤*1371*|*8* and ➤*1372*|*9*. The outer rings of series NUKR and PWKR..-2RS are guided by the rolling elements and ribs ➤*1372*|*10* and ➤*1372*|*11*.

Relubrication facility

Stud type track rollers KR16 and KR19 with a hexagonal socket cannot be relubricated, while stud type track rollers KR16 and KR19 with a mounting slot have a relubrication facility.

Corrosion protection

Corrosion protection by Corrotect

Series PWKR(E)..-2RS-RR is protected against corrosion by the special Cr(VI)-free coating Corrotect ➤*1376*. These bearings have the suffix RR.

8

Stud type track roller without eccentric collar, with cage, sealed on both sides

F_r = *radial load*
F_a = *axial load*

① *Plastic axial plain washers (for KR..-PP) or gap seals (for KR)*

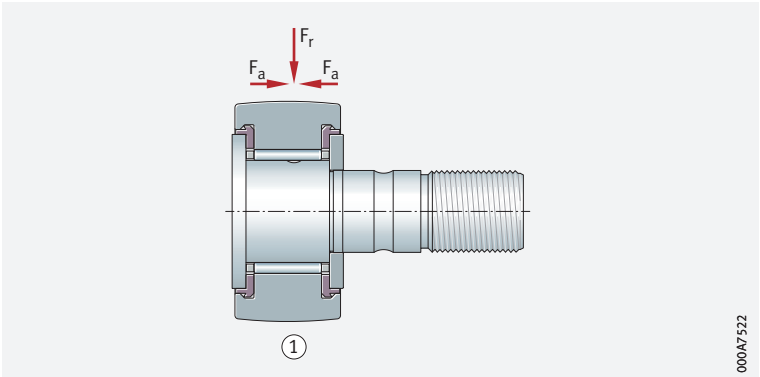

9
Stud type track roller without eccentric collar, full complement needle roller set, sealed on both sides

F_r = *radial load*
F_a = *axial load*

① *Plastic axial plain washers (KRV..-PP)*

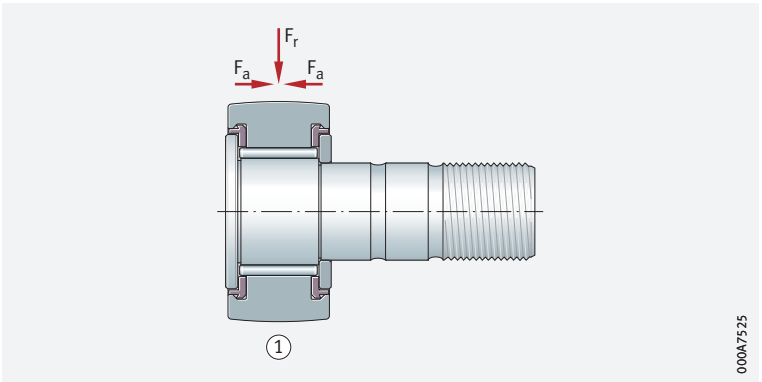

10
Stud type track roller without eccentric collar, full complement cylindrical roller set, sealed on both sides

F_r = *radial load*
F_a = *axial load*

① *Labyrinth seals (NUKR)*

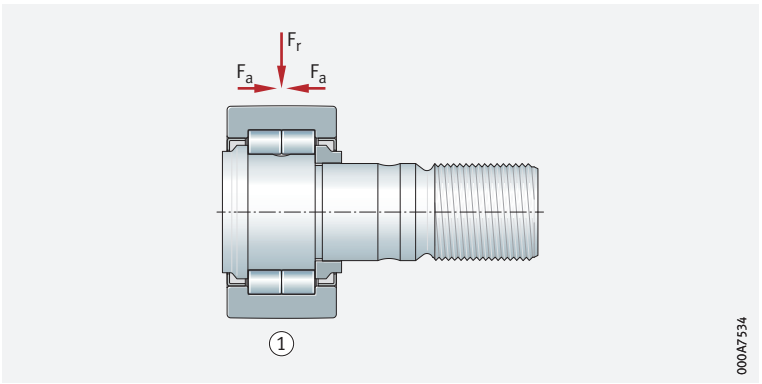

11
Stud type track roller without eccentric collar, full complement cylindrical roller set, with central rib, sealed on both sides

F_r = *radial load*
F_a = *axial load*

① *Protected lip seals (PWKR..-2RS)*

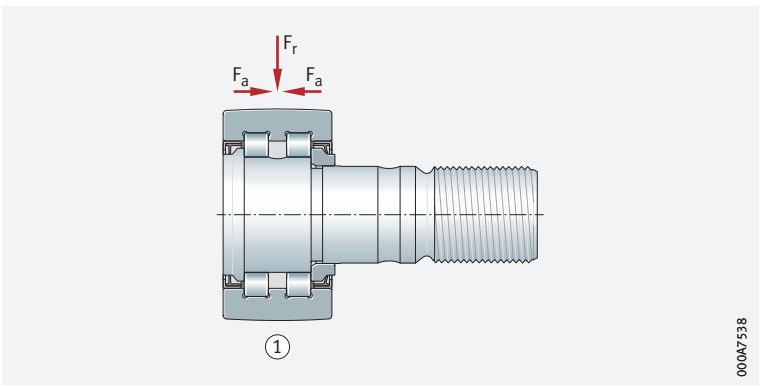

Stud type track rollers with eccentric collar

The bearings have a defined adjustment facility relative to the mating track

Designs with an eccentric collar can be adjusted by means of a hexagonal socket on the flanged or threaded side of the roller stud. The outer ring outside surface can thus be adjusted against the mating track. As a result, larger manufacturing tolerances can be tolerated in the adjacent construction. Furthermore, this gives improved load distribution when using several stud type track rollers and also allows preloaded linear systems to be easily realised.

Highest point of the eccentric collar

The highest point of the eccentric collar is indicated on the roller stud side, the eccentricity e is stated in the product tables. This is also the location of the radial relubrication holes, which should lie in the unloaded zone of the rolling contact.

✎ *Designs*

Series KRE..-PP has a cage, NUKRE and PWKRE..-2RS have a full complement cylindrical roller set ➤*1373*|*12* to ➤*1373*|*14*.

Bearings with a full complement cylindrical roller set have the largest possible number of rolling elements and therefore have particularly high load carrying capacity. Due to the kinematic conditions, however, the speeds achievable with these bearings are somewhat lower than those achievable with the cage-guided stud type track rollers.

Axial guidance of outer ring

✎ *The type of guidance is dependent on the series*

In the series KRE..-PP, axial guidance is provided by the plastic axial plain washers, contact flange and contact washers. In NUKRE, the outer ring is guided axially by the rolling elements, in PWKRE axial guidance of the outer ring is provided by the central rib and rolling elements.

12
Stud type track roller with eccentric collar, with cage, sealed on both sides

F_r = *radial load*
F_a = *axial load*

① *Plastic axial plain washers (KRE..-PP)*

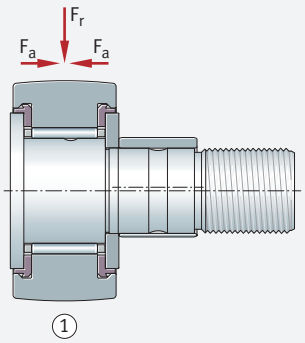

13
Stud type track roller with eccentric collar, full complement cylindrical roller set, sealed on both sides

F_r = *radial load*
F_a = *axial load*

① *Labyrinth seals (NUKRE)*

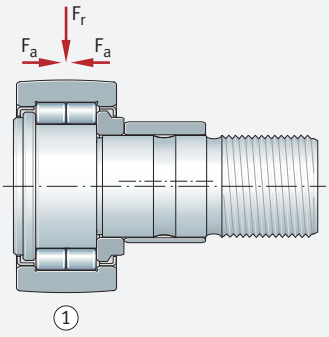

14
Stud type track roller with eccentric collar, full complement cylindrical roller set, with central rib, sealed on both sides

F_r = *radial load*
F_a = *axial load*

① *Protected lip seals (PWKRE..-2RS)*

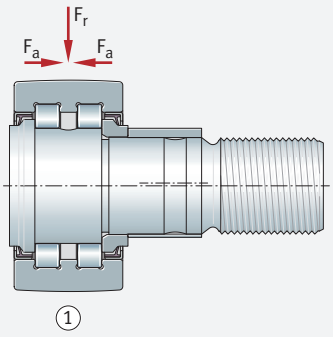

Optimised INA profile

✎ *Advantages*

The advantages of the optimised INA profile are:

- lower Hertzian pressure under tilting ➤ *1374* | *15* and ➤ *1374* | *16*
- higher basic rating life of the outer ring and mating track ➤ *1375* | *17*
- reduced wear between the outer ring outside surface and the mating track ➤ *1375* | *18* and ➤ *1375* | *19*
- increased rigidity in the outer ring contact ➤ *1376* | *20*

Hertzian pressure curve

✎ *Optimised INA profile, profile R = 500, cylindrical profile*

The Hertzian pressure curve is more favourable for bearings with an optimised INA profile than for bearings with a cylindrical profile or with a profile where R = 500 mm (load $C_{rw}/P_r = 5$) ➤ *1374* | *15*.

15
Hertzian pressure curve

① *Optimised INA profile*
② *Profile R = 500*
③ *Cylindrical profile*
④ *Untilted running, β = 0 mrad*
⑤ *Tilted running, β = 3 mrad*

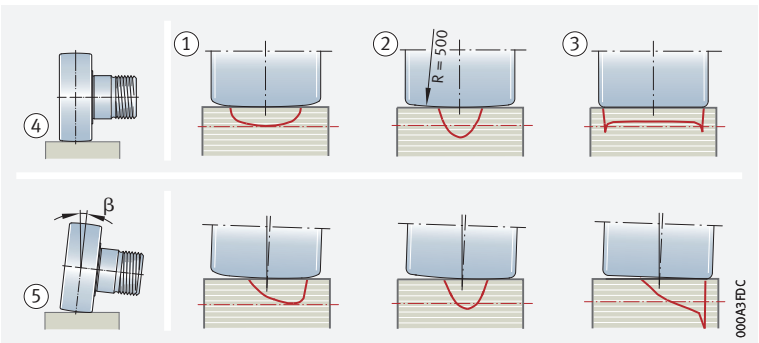

Maximum Hertzian pressure

✎ *Reduced Hertzian pressure with optimised INA profile*

The maximum Hertzian pressure is significantly lower for bearings with an optimised INA profile than for bearings with a cylindrical profile or with the profile R = 500 mm ➤ *1374* | *16*.

16
Maximum Hertzian pressure, stud type track roller NUKR80, F_r = 13 800 N ($C_{rw}/P_r = 5$)

p_H = *maximum Hertzian pressure*
β = *tilt angle*

① *Optimised INA profile*
② *Profile R = 500*
③ *Cylindrical profile*

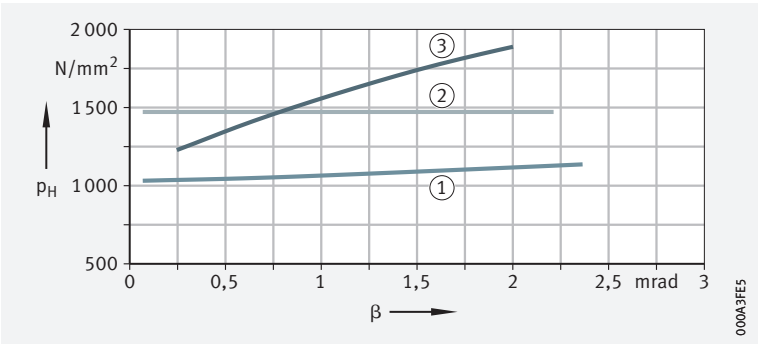

Basic rating life of mating track

Longer rating life of mating track

The rating life of the mating track is significantly longer for outer rings with an optimised INA profile than for bearings with the profile R = 500 mm ➤*1375*|*17*. Yoke type track rollers NUTR15 ➤*1375*|*18* were used as comparative bearings.

17
Basic rating life of the mating track, track made from 42CrMo4 V, hardness 350 HV

L = *basic rating life in millions of overrolling motions*
F_r = *radial load*
① *Optimised INA profile*
② *Profile R = 500*

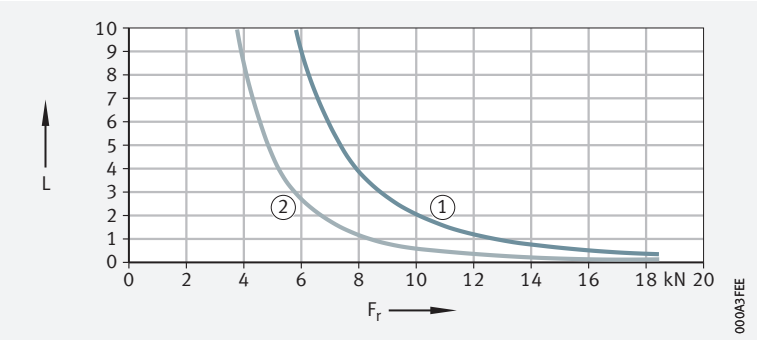

Wear of the mating track

Reduced wear of the mating track

The mating track wears to a lesser extent with the optimised INA profile ➤*1375*|*18*: mating track made from EN-GJS-500-7, mean value derived from several test runs after 360 000 overrolling motions.

18
Wear of the mating track, track made from EN-GJS-500-7

s_w = *wear*
F_{r1} = *low radial load*
F_{r2} = *high radial load*
① *Optimised INA profile*
② *Profile R = 500*

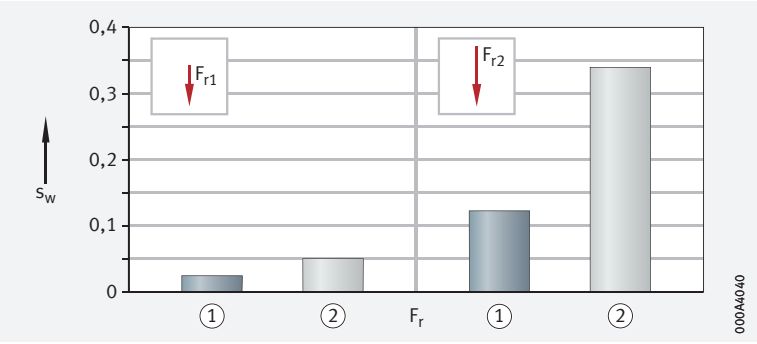

Mating track made from 58CrV4, mean value derived from several test runs after 800 000 overrolling motions ➤*1375*|*19*.

19
Wear of the mating track, track made from 58CrV4

s_w = *wear*
F_{r1} = *low radial load*
F_{r2} = *high radial load*
① *Optimised INA profile*
② *Profile R = 500*

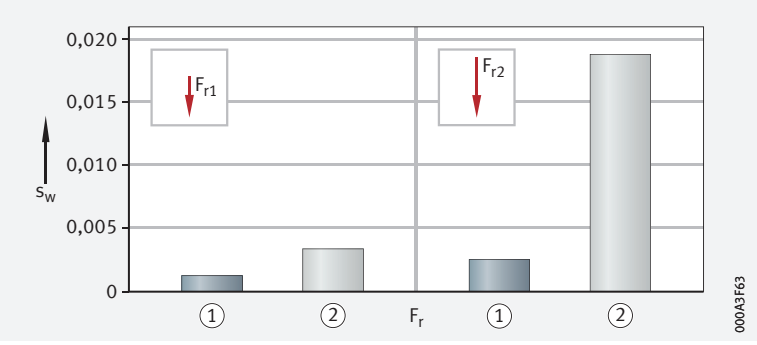

Rigidity in outer ring contact

Radial deflection

The radial deflection of the outer ring and rolling element set is smaller for bearings with an optimised INA profile than for bearings with the profile R = 500 mm ➤*1376*|*20*. Example, yoke type track roller NUTR15.

20
Rigidity in outer ring contact

δ_r = *radial deflection*
F_r = *radial load*

① *Optimised INA profile*
② *Profile R = 500*

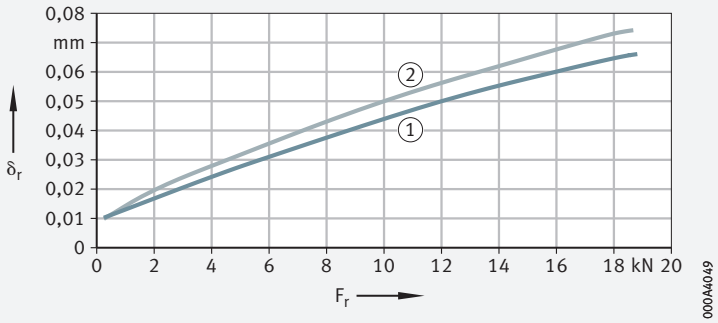

Corrosion protection by Corrotect

A Corrotect coating is often more economical than using corrosion-resistant steels

Track rollers are often subjected to aggressive media. In such applications, corrosion protection is therefore a decisive factor in achieving a long operating life of the bearings. In principle, corrosion-resistant steels may be used here. In many applications, however, the application of a special coating using available Corrotect thin film coating technology is more cost-effective and should therefore be queried in advance.
The series PWTR..-2RS-RR and PWKR(E)..-2RS-RR are therefore available with a Corrotect coating. These bearings have the suffix RR ➤*1385*|*1.12*.
Other series are also available as a special design with high performance Corrotect systems, which are matched to the specific application.

Before Corrotect-coated units are used, the compatibility of the coating with the existing media should always be checked.

Corrotect systems

Corrotect coating thicknesses

Corrotect methods are available which permit the application of an extremely thin coating and, as a result, do not need to be included in the bearing tolerance (0,5 µm to 3 µm or 2 µm to 5 µm).
Increased demands on corrosion protection can be fulfilled with increasing coating thicknesses or completely different Corrotect methods.
In isolated cases, dimensional changes resulting from the coating must be taken into account in a further processing step.

Cr(VI)-free coatings

The current Corrotect systems are all free from Cr(VI), protect effectively against corrosion and, as a result, extend the useful life of the Schaeffler components ➤*1377*|*21*.

Further detailed information on the modular coating tool box and on the individual coating systems can be found in Technical Product Information TPI 186 "*Higher Performance Capacity through the Use of Coatings*". This publication can be requested from Schaeffler.

Fitting of Corrotect-coated bearings

Take account of larger tolerances

The tolerances are increased by the thickness of the coating. In order to reduce the press-in forces, the surface of the parts should be lightly greased for fitting.

21
Uncoated and coated stud type track roller in the salt spray test



1.2 Load carrying capacity

Suitable for high radial loads

The bearings can support high radial loads. Yoke or stud type track rollers with axial guidance tolerate axial loads which are due to slight misalignments, skewed running or temporary contact running impacts.

Installation as yoke or stud type track roller

If used as a yoke and stud type track roller, the outer rings undergo elastic deformation

If the yoke and stud type track rollers are used on a flat mating track, the outer rings undergo elastic deformation. Compared with rolling bearings supported in a housing bore, yoke and stud type track rollers therefore have the following characteristics:

- modified load distribution in the bearing.
  This is taken into consideration by the effective basic load ratings $C_{r\,w}$ and $C_{0r\,w}$ used in the calculation of the rating life.
- bending stresses and reverse bending strengths in the outer ring.
  These are taken into consideration by the permissible effective radial loads $F_{r\,per}$ and $F_{0r\,per}$. The bending stresses and reverse bending strengths must not exceed the permissible strength values of the material



Permissible radial load under dynamic loading

$C_{r\,w}$ is valid

For rotating bearings under dynamic load, the effective basic dynamic load rating $C_{r\,w}$ is used. $C_{r\,w}$ is used to calculate the basic rating life.

The permissible dynamic radial load $F_{r\,per}$ must not be exceeded. If a value for $F_{r\,per}$ is not given, the effective basic dynamic load rating $C_{r\,w}$ is used as a substitute. This basic load rating must also not be exceeded by the radial load present. If the basic static load rating $C_{0r\,w}$ is lower than the basic dynamic load rating $C_{r\,w}$, then $C_{0r\,w}$ applies.

Permissible radial load under static loading

$C_{0r\,w}$ is valid

For bearings under static load, either stationary or with only infrequent rotary motion, the effective basic static load rating $C_{0r\,w}$ applies. $C_{0r\,w}$ is used to calculate the static load safety factor S_0.

The permissible basic static radial load $F_{0r\,per}$ must not be exceeded. If a value for $F_{0r\,per}$ is not given, the effective basic static load rating $C_{0r\,w}$ is used as a substitute. This basic load rating must also not be exceeded by the radial load present. In addition to the permissible radial load of the bearing, the permissible radial load of the mating track must also be taken into consideration ➤ *1391*.

1.3 Angular misalignment

Skewed running

Additional axial load under skewed running

Skewed running leads to additional axial load on the rolling bearing and axial slippage in the rolling contact between the outer ring and mating track ➤1378 | 22. Depending on the skewed running angle α and the lubrication, wear can occur in these cases.

A complete loss of adhesive friction between the outer ring and raceway, with correspondingly severe wear, is to be expected with a skewed running angle $\alpha \geqq 1{,}4 \cdot 10^{-4} \cdot p_H$ (°) or $\alpha \geqq 2{,}5 \cdot 10^{-3} \cdot p_H$ (mrad).

22
Skewed running

α = *skewed running angle*

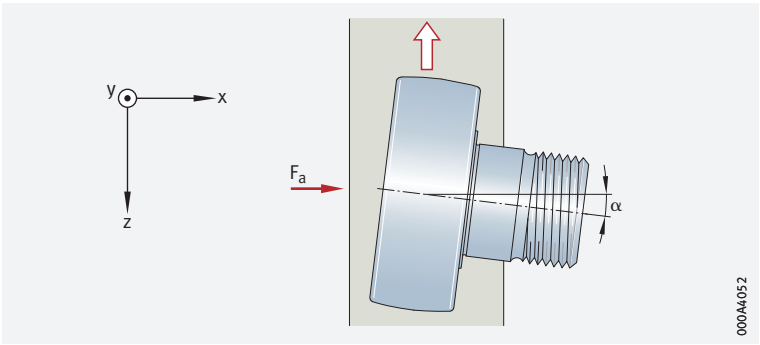

Tilting

Cylindrical outer ring

If tilting occurs during running, increased edge stresses occur, especially in yoke and stud type track rollers with cylindrical outer rings.

Crowned outer ring

Track rollers with a crowned outer ring are less sensitive to tilting and should therefore be used in preference.

Limits for tilting

In practice, track rollers with a cylindrical outside surface and a tilting angle of $\beta > 0{,}1°$ (1,7 mrad) and for yoke and stud type track rollers wth a crowned outside surface and a tilting angle of $\beta > 0{,}25°$ (4,4 mrad) have proved susceptible to damage ➤1378 | 23.

23
Tilting

β = *tilt angle*

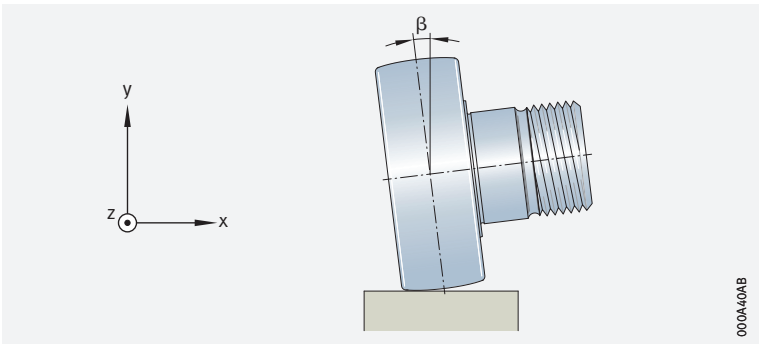

1.4 Lubrication

Two contact zones

Lubricate the rolling elements, rolling element raceway and mating track

Two contact zones must be lubricated and considered separately:

- the rolling elements and rolling element raceway
- the outside surface of the track roller and the mating track

The contact zone between the rolling elements and the rolling element raceway is covered in the chapter Technical principles, Lubrication.

Lubrication of the bearing

Greased with a lubricating grease to GA08

For yoke and stud type track rollers, a lithium complex soap grease with a mineral oil base and EP additives to GA08 is used. Yoke type track rollers can be lubricated via the inner ring, stud type track rollers have a type-dependent relubrication facility via the roller stud.
Greases for initial greasing are listed in the chapter Lubrication ➤*90*|▦ *6*.
For relubrication, greases in accordance with ➤*1379*|▦ *1* are suitable.

In stud type track rollers with an eccentric collar, the eccentric collar covers the radial lubrication hole in the shank. Relubrication must therefore be carried out via the end faces.

▦ **1**
Arcanol rolling bearing greases for relubrication

Arcanol grease	Designation to DIN 51825	Type of grease	Track roller
LOAD150	KP2N–20	Lithium soap grease with mineral oil base	Yoke and stud type roller bearing track rollers
LOAD220	KP2N–20	Lithium calcium soap grease with mineral oil base	Yoke and stud type roller bearing track rollers
MULTI3	KP3K–30	Lithium soap grease with mineral oil base	Yoke and stud type ball bearing track rollers

Lubrication of mating track

Suitable lubricants

For lubrication of the mating track, all lubricants suitable for rolling bearing lubrication may be used. However, there are applications in which the mating track must not be lubricated.



If the contact point cannot be lubricated, wear must be expected, especially under high loads and at high speeds.

Oil lubrication

For oil lubrication, oils of type CLP to DIN 51517 are recommended.

Grease lubrication

For grease lubrication, lithium soap greases to DIN 51825 should be used. Relubrication intervals can only be determined under operating conditions. Relubrication must be carried out at the latest when fretting corrosion first occurs; this can be identified by a reddish discolouration of the mating track or the outer ring.

Solid lubricants and anti-friction coatings

These substances are also suitable for lubrication. At high traverse or rotational speeds, however, they provide effective lubrication for a significantly shorter period than oil or grease lubrication.

Central lubrication system for stud type track rollers

Connection adapter with rapid-fit connection cartridge

If a central lubrication system is to be used, a patented central lubrication adapter can be used to connect the standard roller stud of stud type track rollers with hexagonal sockets on both sides ➤*1380*|⧉ *24*.
This connector comprises a connection adapter with a hexagonal end and a rapid-fit connection cartridge.

The connection adapter is connected to the roller stud on one end of the stud type track roller by replacing the funnel type lubrication nipple with the fitting cylinder. The hexagonal end prevents rotation of the adapter. The other end of the stud type track roller is closed off using the supplied funnel type lubrication nipple ➤*1380*|⧉ *24*.

24
Central lubrication adapter and funnel type lubrication nipple

① *Connection adapter with M10×1 internal thread*
② *Rapid-fit connection cartridge*
③ *Fitting cylinder*
④ *Funnel type lubrication nipple*

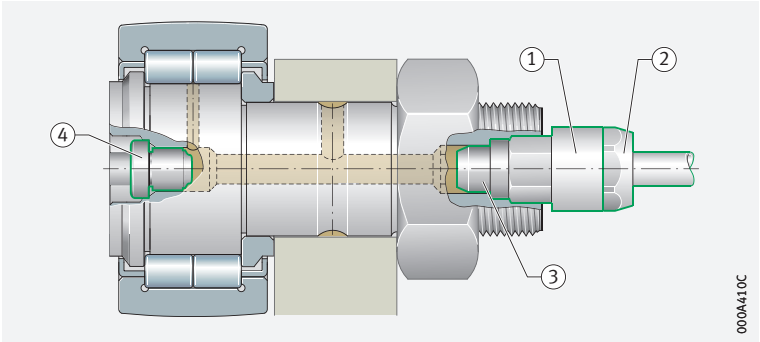

✎ *Hard PA pipes should be used in preference*

The connection adapter has an M10×1 internal thread. This is used for screw mounting and sealing of the rapid-fit connection cartridge. The cartridge gives firm retention and sealing of the plastic pipe.
It is therefore not necessary to screw the pipe and adapter onto each other. Hard PA pipes should be used in preference. In this instance, the operating limits according to DIN 73378 and the manufacturer's guidance must
be observed. The maximum excess pressure for pipes made from PA11 or PA12 is as follows at +23 °C: 31 bar to 62 bar. The maximum excess pressure when using other screw-in connectors is 80 bar.

✎ *Dimensions*

For dimensions of the adapters ➤ *1380* | ▦ *2* and ➤ *1380* | ⧉ *25*.

▦ **2**
Dimensions of adapter

Central lubrication adapter	Dimensions					
	W	L	l_1	l_2	l_3	For polyamide pipe to DIN 73378
Designation			max.		approx.	$d_1 \times s_{nom}$
AP8	8	27	16	22	4	4×0,75
AP10	10	27	15	22	5	4×0,75
AP14	14	25	8	20	6	4×0,75

⧉ **25**
Dimensions of central lubrication adapters

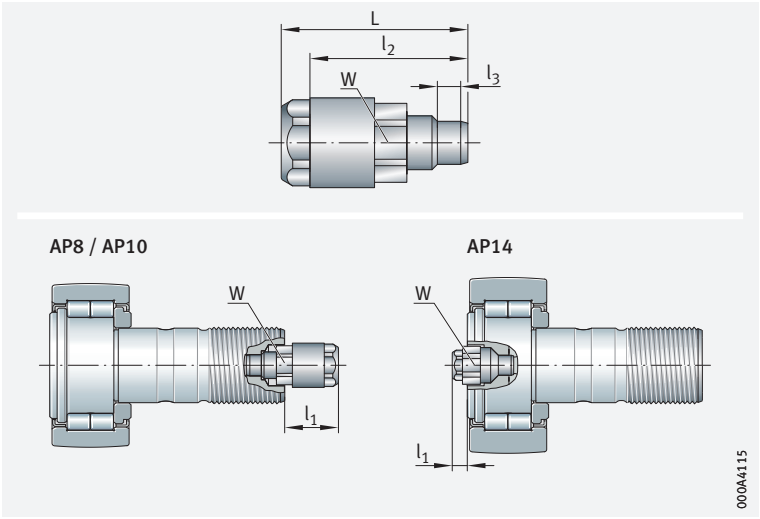

Calculation of relubrication intervals

✎ *Simplified determination of lubrication impulses*

The relubrication quantities for central lubrication using flowable grease and their conversion to the number of relubrication impulses for conventional metering nipple sizes are given in the table ➤ *1381* | ▦ *3*. The data are valid for EP additives, for a lithium soap flowable grease with a mineral oil base ISO VG 100 to ISO VG 220 or NLGI 00 or NLGI 000.

3 *Relubrication quantities for stud type track rollers*

Series[1]	Outside diameter D mm		Central lubrication adapter Designation	Relubrication quantity[2] g	Relubrication impulses for metering nipple of size	
	from	up to			30 mm³	50 mm³
NUKR, NUKRE	35	40	AP8	1,1	40	24
	47	52	AP10	2,4	89	53
	62	90	AP14	7,3	271	163
KR, KRE	35	40	AP8	1,2	44	27
	47	52	AP10	1,6	60	36
	62	90	AP14	6	222	133
KRV, KRVE	35	40	AP8	0,7	26	16
	47	52	AP10	1	37	22
	62	90	AP14	3,2	120	72

1) *For stud type track rollers with hexagonal socket on both sides.*

2) *Relubrication quantity and relubrication intervals for central lubrication using flowable grease for the majority of applications. Note the quantity required to fill the feed lines.*

Relubrication periods

Approximate definition

The approximate definition of the relubrication periods for single shift operation and the majority of applications is shown in ➤*1381*|▦*4* and ➤*1381*|▦*5*. The data are valid for single shift operation; the relubrication quantity and relubrication intervals are valid for the majority of applications. They are based on approximate calculation of the relubrication interval t_{fR}. For definition of the relubrication interval see chapter Relubrication ➤*70*|*6.1*. Within these periods, the number of relubrication impulses determined in accordance with ➤*1381*|▦*3* should be evenly distributed.

4 *Relubrication period for calculating the relubrication intervals*

Load ratio $C_{0r\,w}/P_r$	Maximum operating speed n_{max} in % of $n_{D\,G}$			
	10	25	50	100
$5 > C_{0r\,w}/P_r \geqq 3$	1/2 yearly	–	–	–
$10 > C_{0r\,w}/P_r \geqq 5$	yearly	4 months	monthly	–
$C_{0r\,w}/P_r \geqq 10$	yearly	8 months	2 months	14 days



5 *Periods in single shift operation*

Months	Weeks	Working days	Working hours
1/2	2	10	80
1	4	20	160
2	8	40	320
4	16	80	640
6	24	120	960
8	32	160	1 280
12	48	240	1 920

Fitting of central lubrication adapter

Mount the stud type track roller first

The stud type track roller must be mounted before fitting the adapter. The unused lubrication hole in the roller stud must be closed off using the funnel type lubrication nipple supplied. Only the lubrication nipples supplied should be used.

Guidelines for mounting of the adapter

The central lubrication adapter should preferably be pressed in using a manual lever press under low, uniform pressure or carefully driven into the unused hexagonal socket of the roller stud by means of light blows with a plastic hammer; pay attention to the press-in depth l_3 and the position of the hexagon ➤*1380*|▭*25* and ➤*1380*|▦*2*.

Fitting of the polyamide pipe

The plastic pipe must be cut off straight across and inserted into the cartridge until it stops. Only polyamide pipes to DIN 73378 should be used. Check the seating of the pipe. Note maximum pressures, maximum temperatures and minimum bending radius. The maximum pipe length up to the distributor is 1 m.

1.5 Sealing

Yoke type track rollers

✎ *Available in open or sealed designs*

Yoke type track rollers are available in open designs and with non-contact or contact type seals ➤ *1382*|▦ *6*.

▦ *6*
Seals used in yoke type track rollers

Yoke type track roller	Seal
STO	Open
RSTO	
RNA22..-2RSR	Lip seal on both sides
NA22..-2RSR	
PWTR..-2RS	Protected lip seal on both sides

continued ▼

▦ *6*
Seals used in yoke type track rollers

Yoke type track roller	Seal
NATR..-PP	Three-stage sealing on both sides plastic axial plain washers
NATV..-PP	
NATR	Gap seal on both sides
NATV	
NUTR	Labyrinth seal on both sides
NNTR..-2ZL	Contact washer with lamellar ring on both sides

continued ▲

Stud type track rollers

✎ *Available with seals on both sides*

Stud type track rollers are sealed on both sides. Depending on the series, non-contact or contact type seals are used. A three-stage seal, comprising plastic axial plain washers with formed seal lips, is also used on both sides of the bearing ➤ *1382*|▦ *7*.

▦ *7*
Seals used in stud type track rollers

Stud type track roller	Seal
KR	Gap seal on both sides
KR..-PP	Three-stage sealing on both sides by plastic axial plain washers
KRE..-PP	
KRV..-PP	
NUKR	Labyrinth seal on both sides
NUKRE	
PWKR..-2RS	Protected lip seal on both sides
PWKRE..-2RS	

Three-stage seal

✎ *Seal design*

In the three-stage concept, there is a gap seal between the plastic axial plain washer and the outer ring, as well as a labyrinth seal between the formed seal lip and an undercut in the outer ring. The disc spring shape of the axial plain washer gives a preloaded contact seal as the third stage. It also provides axial sliding contact between the outer ring and contact washers, thus reducing friction and grease consumption.

1.6 Speeds

✎ *Speeds n_{DG}*

The maximum possible speed is essentially determined by the permissible operating temperature of the yoke and stud type track rollers. The speed thus depends on the type of bearing, the load, the lubrication conditions and the cooling conditions.

Speeds with lip seals

The speed of track rollers with lip seals is additionally restricted by the permissible sliding speed at the seal lip.

Speed during continuous operation

✎ *Criteria for guide values*

The speeds $n_{D\,G}$ in the product tables are guide values. They were determined for:

- grease lubrication
- loads during continuous operation of $< 0{,}05 \cdot C_{0r\,w}$
- skewed running angles of $\alpha < 0{,}03°$ ($< 0{,}5$ mrad)
- an ambient temperature of +20 °C
- outer ring temperatures of +70 °C
- lubricated mating tracks
- no external axial load

✎ *Reducing the speed*

The speeds must be reduced under the following conditions:

- loads $> 0{,}05 \cdot C_{0r\,w}$
- additional axial forces (skewed running)
- insufficient heat dissipation

✎ *Higher speeds*

Higher speeds can be achieved with intermittent operation and oil impulse lubrication.

1.7 Noise

Schaeffler Noise Index

The Schaeffler Noise Index (SGI) is not yet available for this bearing type ➤*69*. The data for these bearing series will be introduced and updated in stages.

Further information:

- ***medias*** *https://medias.schaeffler.com*

1.8 Temperature range

✎ *Limiting values*

The operating temperature of the yoke and stud type track rollers is limited by:

- the dimensional stability of the bearing rings and rolling elements
- the cage
- the lubricant
- the seals



8
Permissible temperature ranges

Operating temperature	Yoke and stud type track rollers							
	Open or with gap seal or labyrinth seal		With lip seals 2RS, 2RSR		With plastic cages TV		With three-stage seal PP	
	from	to	from	to	from	to	from	to
	°C							
	–30	+140	–30	+120	–30	+120	–30	+100

Note the information on the operating temperature range in the chapter Technical principles, Lubrication.

In the event of anticipated temperatures which lie outside the stated values, please contact Schaeffler.

1.9 Cages

Yoke type track rollers

Yoke type track rollers without inner ring

With cage

Yoke type track rollers RSTO and RNA22..-2RSR have a sheet steel cage as standard. Yoke type track rollers RSTO up to D = 24 mm have a plastic cage made from polyamide PA66 (suffix TV). Series RSTO does not have axial guidance of the needle roller and cage assembly and of the outer ring.
As a result, lateral guidance is required.

Yoke type track rollers with inner ring

With cage, with full complement needle roller or cylindrical roller set

The series STO, NA22..-2RSR, NATR and NATR..-PP have a sheet steel cage as standard. Yoke type track rollers STO up to D = 24 mm have a plastic cage made from polyamide PA66 (suffix TV). The series NATV and NATV..-PP have a full complement needle roller set, while yoke type track rollers NUTR, PWTR..-2RS and NNTR..-2ZL have a full complement cylindrical roller set. Series STO does not have axial guidance of the needle roller and cage assembly and of the outer ring. As a result, lateral guidance is required.

Stud type track rollers

Stud type track rollers without eccentric collar

With cage, with full complement needle roller or cylindrical roller set

Stud type track rollers KR and KR..-PP have a sheet steel cage, the design KRV..-PP has a full complement needle roller set. The series NUKR and PWKR..-2RS have a full complement cylindrical roller set.

Axial guidance of outer ring

In KR, axial guidance is provided directly by the contact flange and contact washer, while in KR..-PP and KRV..-PP this is provided by plastic axial plain washers, the contact flange and contact washer. In NUKR, the outer ring is guided axially by the rolling elements, in PWKR, axial guidance of the outer ring is provided by the central rib and rolling elements.

Stud type track rollers with eccentric collar

With cage or full complement cylindrical roller set

Series KRE..-PP has a sheet steel cage, NUKRE and PWKRE..-2RS have a full complement cylindrical roller set.

Axial guidance of outer ring

In KRE..-PP, axial guidance is provided by the plastic axial plain washers, contact flange and contact washer. In NUKRE, the outer ring is guided axially by the rolling elements, in PWKRE, axial guidance of the outer ring is provided by the central rib and rolling elements.

1.10 Internal clearance

Radial internal clearance

Standard corresponds approximately to C2 or CN

The radial internal bearing clearance of yoke and stud type track rollers corresponds approximately to tolerance class C2 (Group 2) and, in the case of STO and NA22..-2RSR, to tolerance class CN (Group N). Values ➤ *1385* | *9*.

The values for radial internal clearance correspond to DIN 620-4:2004 (ISO 5753-1:2009). These are valid for bearings which are free from load and measurement forces (without elastic deformation).

9 *Radial internal clearance for yoke and stud type track rollers*

Nominal bore diameter d mm		Radial internal clearance							
		C2 (Group 2) µm		CN (Group N) µm		C3 (Group 3) µm		C4 (Group 4) µm	
over	incl.	min.	max.	min.	max.	min.	max.	min.	max.
–	24	0	25	20	45	35	60	50	75
24	30	0	25	20	45	35	60	50	75
30	40	5	30	25	50	45	70	60	85
40	50	5	35	30	60	50	80	70	100
50	65	10	40	40	70	60	90	80	110
65	80	10	45	40	75	65	100	90	125
80	100	15	50	50	85	75	110	105	140
100	120	15	55	50	90	85	125	125	165
120	140	15	60	60	105	100	145	145	190

1.11 Dimensions, tolerances

Tolerances

The dimensional and running tolerances correspond to the tolerance class Normal in accordance with ISO 492, for KR, KRE and KRV to ISO 7063.

Deviations from ISO 492

The following deviations from ISO 492 apply:

- the diameter deviations of the profiled outside surface 0/–0,05 mm
- for NNTR, the diameter tolerance class h10
- for NATR, NATV, NUTR, PWTR..-2RS, the tolerance class h12 for width B
- for NATR, NATV, the roundness of the inner ring
- for stud type track rollers, the tolerance class of the shank diameter h7 and the eccentric collar diameter h9



Tolerances for Corrotect-coated bearings

For PWTR..-2RS-RR and PWKR..-2RS-RR , the tolerances are increased by the thickness of the Corrotect special coating.

Enveloping circle

Yoke type track rollers without inner ring

For yoke type track rollers without an inner ring, RSTO and RNA22..-2RSR, the needle enveloping circle F_w is in the tolerance class F6.
The enveloping circle is the inner inscribed circle of the needle rollers in clearance-free contact with the adjacent construction.

1.12 Suffixes

Suffixes describe the design and features of a bearing in more detail.

10 *Suffixes and corresponding descriptions*

Suffix	Description of suffix	
PP	Plastic axial plain washer with formed seal lip on both sides of the bearing, giving a three-stage seal	Standard
RR	Protected against corrosion by Corrotect special coating in the case of PWTR..-2RS and PWKR(E)..-2RS	
SK	Hexagonal socket only on the flange-side end face, no relubrication facility	
TV	Plastic cage	
XL	X-life design	
2RS	Protected lip seal on both sides	
2RSR	Radial contact lip seal on both sides	
2ZL	Contact washer with lamellar ring on both sides	

1.13 Structure of bearing designation

With ***medias*** interchange, equivalent Schaeffler bearing designations can be determined for bearing designations from other rolling bearing manufacturers *https://www.schaeffler.de/std/1B69*.

Examples of composition of bearing designation

The designation of bearings follows a set model. Examples ➤ *1386* | *26* to ➤ *1386* | *29*.

26
Yoke type track roller, single row, without inner ring, without seal, without axial guidance, open design, plastic cage, R = 500: designation structure



27
Yoke type track roller, double row, with inner ring, sealed, with axial guidance, optimised INA profile: designation structure

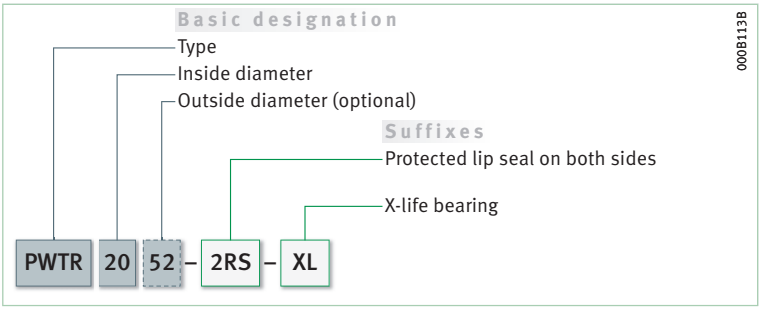

28
Stud type needle roller bearing track roller, full complement needle roller set, with axial guidance, three-stage seal, optimised INA profile: designation structure



29
Stud type cylindrical roller bearing track roller, full complement cylindrical roller set, with axial guidance, X-life design, optimised INA profile: designation structure

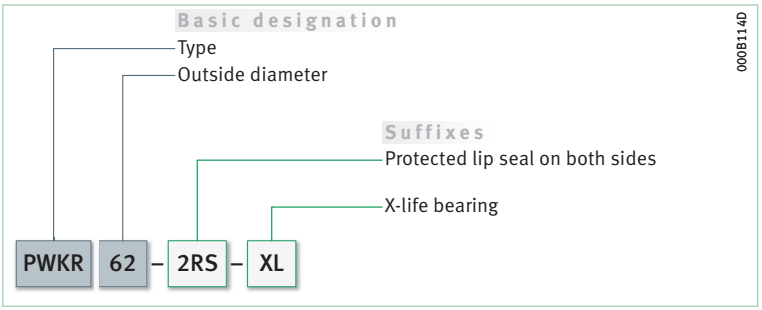

1.14 Dimensioning

✎ *Calculation of the rating life*

The methods for calculating the rating life are:

- the basic rating life to DIN ISO 281
- the adjusted basic rating life to DIN ISO 281
- the expanded calculation of the adjusted reference rating life to DIN ISO 281-4

✎ *Use effective basic dynamic/static load ratings*

These methods are described in the chapter Load carrying capacity and life. For yoke and stud type track rollers, use the following values (values ➤ *1403*):

- for C_r, the effective basic dynamic load rating $C_{r\,w}$
- for C_{0r}, the effective basic static load rating $C_{0r\,w}$
- for C_{ur}, the effective fatigue limit load $C_{ur\,w}$

✎ *Other rating life equations*

Other equations for calculating the rating life ➤ *1387* | *f 1*, ➤ *1387* | *f 2* and ➤ *1387* | *f 3*.

f 1 *Basic rating life*

$$L_s = 0{,}0314 \cdot D \cdot \left(\frac{C_{r\,w}}{P_r} \right)^p$$

f 2 *Basic rating life in oscillating operation*

$$L_h = 26{,}18 \cdot \frac{D}{H \cdot n_{osc}} \cdot \left(\frac{C_{r\,w}}{P_r} \right)^p$$

f 3 *Basic rating life*

$$L_h = 52{,}36 \cdot \frac{D}{\bar{v}} \cdot \left(\frac{C_{r\,w}}{P_r} \right)^p$$

Legend

L_s	10^5 m	Basic rating life in 10^5 m
L_h	h	Basic rating life in operating hours
$C_{r\,w}$	N	Effective basic dynamic load rating. $C_{r\,w}$ is that load of constant magnitude and direction which a sufficiently large group of apparently identical track rollers can endure for a basic rating life of one million revolutions
P_r	N	Equivalent dynamic bearing load (radial load)
p	–	Life exponent: p = 3 for yoke or stud type track rollers based on balls p = 10/3 for yoke and stud type track rollers based on needle or cylindrical rollers
n	min^{-1}	Operating speed
D	mm	Outside diameter of track roller
H	m	Single stroke length for oscillating motion
n_{osc}	min^{-1}	Number of return strokes per minute
$\bar{v}$	m/min	Mean travel velocity.



Operating life

✎ *Life actually achieved*

The operating life is defined as the life actually achieved by a yoke type track roller, stud type track roller or ball bearing track roller. This can deviate significantly from the calculated basic rating life.

✎ *Cause of deviations*

Possible causes of a deviation between the basic rating life and the operating life are wear or fatigue as a result of:

- deviations in the operating data
- misalignment between the track roller and mating track
- insufficient or excessive operating clearance
- contamination of the track roller
- inadequate lubrication
- excessive operating temperature
- oscillating bearing motion with very small swivel angles, leading to false brinelling
- wear between the outer ring outside surface and mating track
- high vibration and false brinelling
- very high shock loads, static overloading
- prior damage during mounting

Due to the variety of mounting and operating conditions, the operating life cannot be precisely calculated in advance. The most reliable way of arriving at a close estimate is by comparison with similar applications.

Static load safety factor

✎ $S_0 = C_{0r\,w}/F_{0r}$

In addition to the basic rating life L, it is also always necessary to check the static load safety factor S_0 ➤ *1388* | *4*.

4
Static load safety factor

$$S_0 = \frac{C_{0r\,w}}{F_{0r}}$$

Legend

S_0	–	Static load safety factor
$C_{0r\,w}$	N	Effective radial basic static load rating in accordance with product table
F_{0r}	N	Maximum static radial load on track roller.

Track rollers are regarded as heavily loaded at a static load safety factor of $S_0 < 8$. Static load safety factors of $S_0 < 1$ cause plastic deformation of the rolling elements and the raceways, which can impair smooth running. This is only permissible for bearings with small rotary motions or in secondary applications.

If an application has a static load safety factor of $S_0 < 2$, please consult Schaeffler.

Frictional torque

✎ *Calculation only possible in approximate terms*

The frictional torque M_R of a yoke type, stud type or ball bearing track roller depends on many influencing factors such as load, speed and type, as well as the lubrication conditions and seal friction. Due to the wide range
of these influencing factors, the frictional torque can only be calculated approximately.

For designs without contact seals, the frictional torque can be calculated under normal operating conditions and moderate speed range in accordance with ➤ *1388* | *5*.

5
Frictional torque

$$M_R = f \cdot F_r \cdot \frac{d_M}{2}$$

Legend

M_R	Nmm	Frictional torque of track roller
f	–	Coefficient of friction ➤ *1389*	*11* and ➤ *1389*	*12*
F_r	N	Radial load
d_M	mm	Mean bearing diameter of track roller (d + D)/2.

11 *Coefficient of friction for yoke and stud type track rollers*

Type	Coefficient of friction f
Cylindrical roller bearing, full complement	0,002 to 0,003
Needle roller bearing, with cage	0,003 to 0,004
Needle roller bearing, full complement	0,005 to 0,007

12 *Coefficient of friction for track rollers*

Type	Coefficient of friction f
Ball bearing, single row	0,0015 to 0,002
Ball bearing, double row	0,002 to 0,003

Validity of coefficients of friction

The stated factors f are valid for yoke type, stud type and ball bearing track rollers, which are unsealed or have a contact seal and are subjected to radial load. If sealed designs are used, higher coefficients of friction must be expected.

Influence of additional axial forces

Additional axial forces, such as those occurring under large skewed running angles, can lead to a substantial increase in the values, especially in the case of track rollers based on needle rollers. Track rollers based on ball bearings can support axial loads without a significant change in friction.

Displacement resistance

When an outer ring rolls on a track, it must overcome not only the friction within the bearing but also the rolling friction between the outer ring and the mating track. The displacement resistance is determined from the rolling friction and the frictional torque M_R in accordance with ➤1389| f 6.

f 6 *Displacement resistance*

$$F_v = \frac{2 \cdot (f_R \cdot F_r + M_R)}{D}$$

Legend

F_v	N	Displacement resistance
f_R	mm	Coefficient of rolling friction for tracks made from hardened steel: $f_R = 0{,}05$ mm
F_r	N	Radial load
M_R	Nmm	Frictional torque
D	mm	Outside diameter of track roller.



1.15 Minimum load

Minimum load $C_{0r\,w}/F_r < 60$

In order to ensure that the outer ring is driven, that no slippage occurs and that the track roller does not lift from the mating track, the track roller must be subjected to a minimum load in dynamic operation. In general, the minimum load is calculated using the ratio $C_{0r\,w}/F_r < 60$.

1.16 Design of bearing arrangements

Adjacent construction for yoke type track rollers

Yoke type track rollers without inner ring, raceway design

For yoke type track rollers without an inner ring, the rolling element raceway on the shaft or stud must be hardened and ground ➤1389| 13. The surface hardness must be 670 HV to 840 HV, the hardening depths CHD or SHD must be sufficiently large.

13 *Tolerances and surface design*

Diameter tolerance of shafts or studs		Roughness	Roundness tolerance	Parallelism tolerance
Without inner ring	With inner ring		max.	max.
k5 Ⓔ	g6 Ⓔ (with point load)	Ramax 0,4 (Rzmax 2)	25% of diameter tolerance	50% of diameter tolerance

Location of yoke type track rollers without axial guidance

For yoke type track rollers without axial guidance, the outer ring and needle roller and cage assembly must be laterally guided ➤*1390*|*30*. The contact surfaces for the outer rings must be precision machined, wear-resistant and lubricated (Ramax 2 recommended).

Bearing parts must not be interchanged with parts from other bearings during fitting

Yoke type track rollers without axial guidance are not self-retaining. The outer ring and the needle roller and cage assembly are matched to each other and must not be interchanged during mounting with components from other bearings of the same size. The inner rings are matched to the enveloping circle tolerance class F6 and can be interchanged within their accuracy class (used in different combinations).

30
Lateral guidance of outer ring and needle roller and cage assembly

① *RSTO*

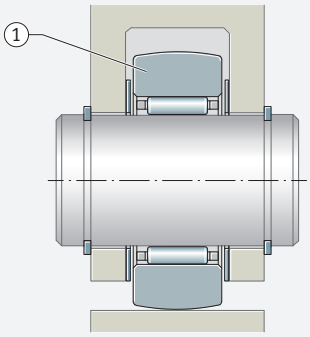

Location of yoke type track rollers with axial guidance

Observe dimension d_2

Yoke type track rollers with axial guidance must be axially clamped in place. The thrust washers must be axially supported if axial loads occur. The dimension d_2 in the product tables must be observed ➤*1390*|*31*.

Location by snap ring

Yoke type track rollers NATR and NATV can be located using conventional fasteners such as snap rings ➤*1390*|*31*.

31
Location by snap ring

d_2 = *abutment diameter*

① *NATR*
② *Snap ring*

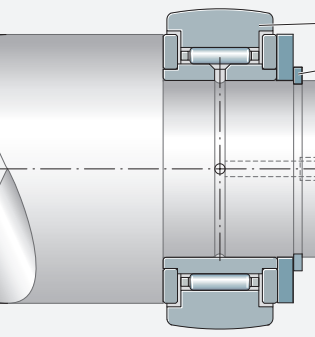

Firmly locate inner ring and thrust rings axially

For yoke type track rollers NNTR..-2ZL, NUTR and PWTR..-2RS, the inner ring and thrust rings must be located axially ➤*1390*|*32*.

32
Clamping of inner ring and thrust rings

① *PWTR..-2RS*

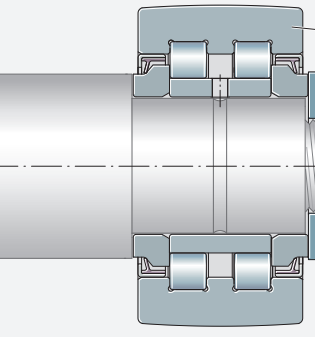

Adjacent construction for stud type track rollers

Bore tolerance H7

The bore tolerance H7 produces a clearance fit since the stud tolerance is h7 for studs without eccentric collar and h9 for studs with eccentric collar.

Design of locating surfaces

The locating surfaces for stud type track rollers must be flat, perpendicular and of sufficient height. The strength of the nut locating surface must be sufficiently high. The dimension must not be less than the dimension d_2 in the product tables.

Lead chamfer

The lead chamfer on the locating bore must not be more than 0,5×45°.

Axial location

Axial location

Stud type track rollers must be axially secured using a hexagon nut. The nuts of grade 8 to ISO 4032 (M6, M8), ISO 8673, are not included in the delivery and must be ordered separately.

If heavy vibration occurs, the stud type track rollers can be located using self-locking nuts in accordance with DIN 985 or special locking washers.

For self-locking nuts, a higher tightening torque must be observed; the advice given by the nut manufacturer must be followed.

Position of lubrication hole

Ensure that the lubrication hole is positioned correctly

The position of the radial lubrication hole is indicated on the flanged side of the roller stud ➤*1391*|*33*. This must not be positioned in the loaded zone.

33
Position of lubrication hole

① *NUKR*
② *Marking (position of radial lubrication hole)*

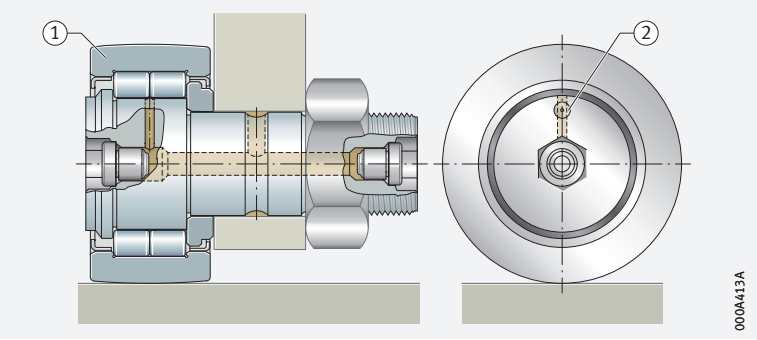

Design of mating track

Take account of Hertzian pressure

In the design of the mating track (material and strength, heat treatment, surface), the Hertzian pressure p_H must be taken into consideration. This is dependent on the load, the contact geometry (point contact or line contact) and the modulus of elasticity of the materials.

Nomogram for determining the Hertzian pressure

The Hertzian pressure can be read from the nomogram and calculated ➤*1393*|*35*. The nomogram is valid for mating tracks made from steel. For other materials, the correction factor k must be taken into consideration ➤*1394*|*15*.

Additional conditions

Other conditions:

- point contact
- radius of curvature R = 500. For radii R > 500 and the optimised INA profile, correction values must be calculated ➤*1394*|*10*
- mating track flat in the direction of the track roller axis
- signs according to ➤*1392*|*34*

34
Raceway radii and signs

D = *outside diameter of track roller*
r_L = *raceway radius*

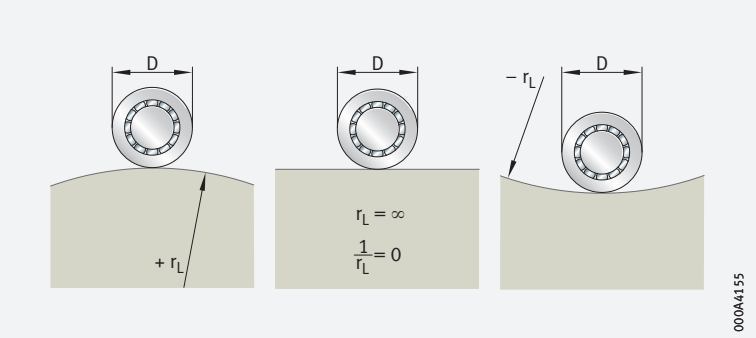

Example

✎ *NUKR35*

- stud type track roller NUKR35 with optimised INA profile
- D = 35 mm
- outer ring width C = 18 mm
- radial load F_r = 2 500 N
- cam plate, radius r_L = 80 mm

Curvature sum

✎ *Calculating the curvature sum*

The curvature sum is calculated from the raceway radius r_L and the diameter D of the track roller ➤*1392*| *f 7*.

f 7
Curvature sum

$$\frac{1}{r_L} + \frac{2}{D} = \frac{1}{80} + \frac{2}{35} = 0{,}07\ \text{mm}^{-1}$$

p_{H500} = 1 250 N/mm²

f 8
Hertzian pressure

$$p_{H\ \text{opt. INA profile}} \approx 1\,250\ \text{N/mm}^2 \cdot k_{pH}$$

= 1 250 N/mm² · 0,85
= 1 063 N/mm²
(1 025 N/mm² from calculation program BEARINX),
k_{pH} ➤*1393*| ▦ *14*.

35 *Nomogram for determining Hertzian pressure, calculation example (purple)*

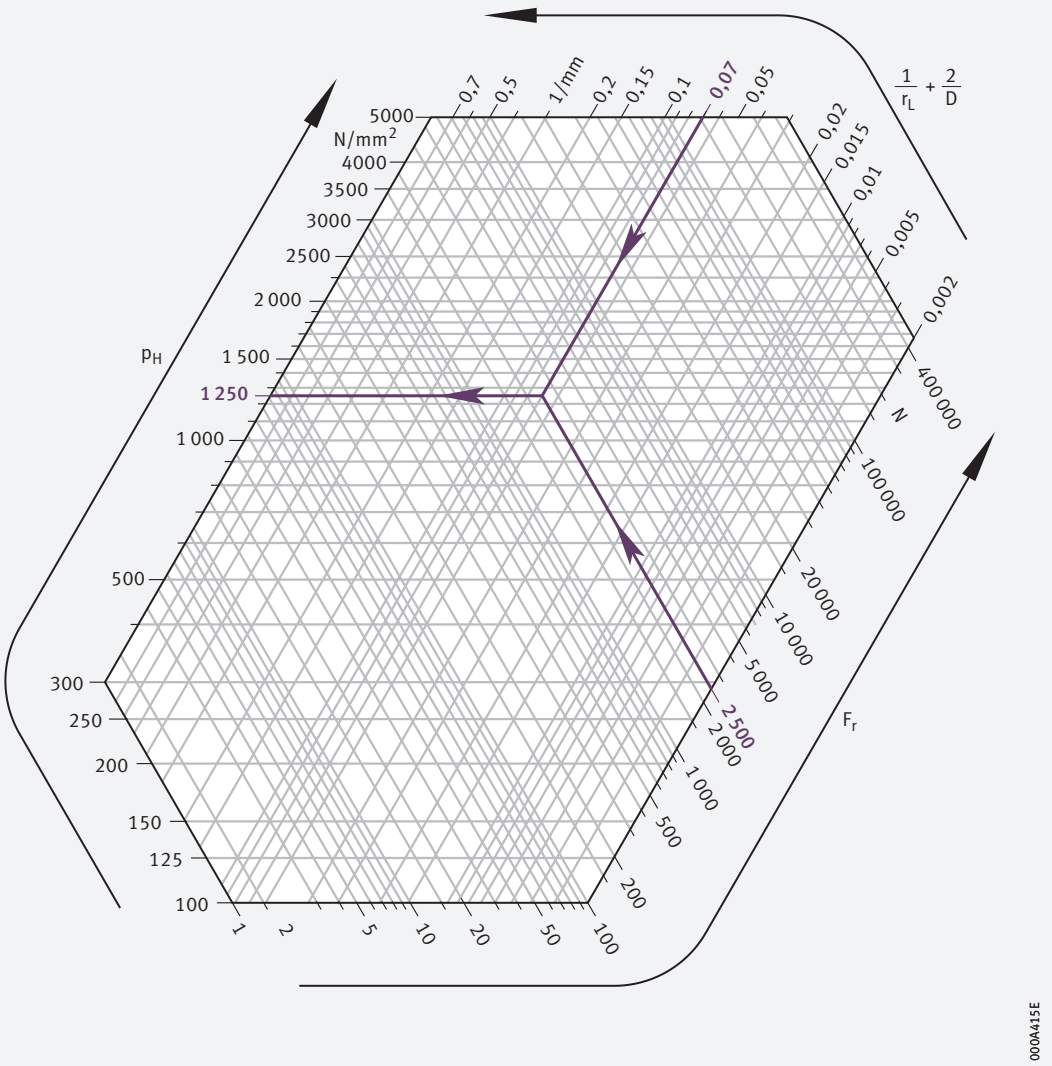

Track rollers with optimised INA profile

For an outer ring with the optimised INA profile, the following calculation provides sufficiently precise values ➤ *1393* | *9* and ➤ *1393* | *14*.

9
Optimised INA profile

$$p_{H\,opt.\,INA\,profile} \approx k_{pH} \cdot p_{H500}$$

14
Pressure factor k_{pH}

Outer ring width C mm	Pressure factor k_{pH}
$10 \leqq C \leqq 15$	1
$15 < C \leqq 20$	0,85
$20 < C \leqq 30$	0,83
$30 < C \leqq 35$	0,8

Radius of curvature R > 500 mm

If the outer ring has a radius of curvature of R > 500 mm, ➤1394 | 10.

10
R > 500 mm

$$p_{HR} = p_{H500} \cdot \left(\frac{500}{R}\right)^{0,185}$$

Materials for mating track

High load on the mating track

The mating track is subjected to high load during overrolling. This produces high Hertzian contact pressures. The strength and surface hardness of the material must be matched to this load.

Correction factors

For raceways subjected to high loads, through hardened steels, case hardened steels and steels for flame or induction hardening are recommended. For raceways subjected to low loads, construction steels and cast steel or cast iron materials can be used ➤1394 | 11 ➤1394 | 15.

11
Correction for mating track material

$$p_H = k \cdot p_H(\text{steel} / \text{steel})$$

15
Correction factor k

Material	Material no.	Correction factor for mating track with k	
		for point contact	for line contact
EN-GJL-200	0.6020	0,74	0,8
EN-GJL-300	0.6030	0,81	0,85
GG-40	–	0,85	0,88
EN-GJS-400-15	0.7040	0,92	0,94
EN-GJS-600-3	0.7060	0,94	0,96
EN-GJS-800-2	0.7080	0,96	0,97

Guide values for permissible Hertzian pressure

Selection by material

The table ➤1395 | 16 gives a selection of materials with the associated values. The values were determined on steel test specimens; load cycles of 10^7 were achieved.

On a similar basis to the calculation of the load carrying capacity of rolling bearings, this gives:

- $p_{H\,stat}$ for predominantly static load
- $p_{H\,dyn}$ for predominantly dynamic load

16 *Materials and guide values for permissible Hertzian pressure (selection)*

Material	Material designation		Material no.		Hertzian pressure		Proof stress of material
	new	old			$p_{H\,stat}$ N/mm²	$p_{H\,dyn}$ N/mm²	$R_{p0,2}$ N/mm²
Flake graphite cast iron	EN-GJL-150	GG-15	EN-JL1020	0.6015	850	340	120
	EN-GJL-200	GG-20	EN-JL1030	0.6020	1 050	420	150
	EN-GJL-250	GG-25	EN-JL1040	0.6025	1 200	480	190
	EN-GJL-300	GG-30	EN-JL1050	0.6030	1 350	540	220
	EN-GJL-350	GG-35	EN-JL1060	0.6035	1 450	580	250
	GG-40		–		1 500	600	280
Spheroidal graphite cast iron	EN-GJS-400-15	GGG-40	EN-JS1030	0.7040	1 000	490	250
	EN-GJS-500-7	GGG-50	EN-JS1050	0.7050	1 150	560	320
	EN-GJS-600-3	GGG-60	EN-JS1060	0.7060	1 400	680	380
	EN-GJS-700-2	GGG-70	EN-JS1070	0.7070	1 550	750	440
	EN-GJS-800-2	GGG-80	EN-JS1080	0.7080	1 650	800	500
Cast steel	GE200	GS-38	1.0420		780	380	200
	GE240	GS-45	1.0446		920	450	230
	GS-52		1.0552		1 050	510	260
	GE300	GS-60	1.0558		1 250	600	300
	GS-62		–		1 300	630	350
	GS-70		–		1 450	700	420
Construction steel	S235JR	St 37-2	1.0037		690	340	235
	S275JR	St 44-2	1.0044		860	420	275
	S355J2G3+N	St 52-3	1.0570		980	480	355
Quenched and tempered steel	C45 V		1.0503		1 400	670	500
	Cf53 V		1.1213		1 450	710	520
	Cf56 V		–		1 550	760	550
	C60 V		1.0601		1 600	780	580
	46Cr2 V		1.7006		1 750	850	650
	42CrMo4 V		1.7225		2 000	980	900
	50CrV4 V		1.8159		2 000	980	900
Hardened steel and with tempering at low temperatures	100Cr6 H		1.3505		4 000	1 500	1 900
	16MnCr5[1]		1.7131		4 000	1 500	770[3]
	Cf53[2]		1.1213		4 000	1 500	730[3]
	Cf56[2]		–		4 000	1 500	760[3]

1) *Case hardened.*
2) *Induction surface layer hardening.*
3) *Proof stress of the core.*



Hardenable materials

✎ *Suitable steels*

The following materials with a purity level corresponding to that of alloyed construction steels may be used:

- through hardening steels to ISO 683-17, such as 100Cr6. In special cases, surface hardening is possible.
- case hardening steels to ISO 683-17, such as 17MnCr5, or in accordance with EN 10084, such as 16MnCr5. Both the hardenability and the core strength must be taken into consideration. For case hardening, a fine grained hardening structure and a case hardening depth CHD in accordance with ➤ *1396* | *12* is necessary.
- steels for flame or induction hardening to ISO 683-17, such as C56E2, or to DIN 17212, such as Cf53. For flame or induction hardening, only the parts of the machine component used as raceways must be hardened. The material should be quenched and tempered before hardening. The surface hardening depth SHD is determined in accordance with ➤ *1396* | *13*

Heat treatment of the mating track

Specifications for heat treatment

The following apply for hardened mating tracks:

- a surface hardness of 670 HV to 840 HV
- CHD and SHD according to ➤*1396*| *f 12* and ➤*1396*| *f 13* – in accordance with DIN ISO 15787, the depth of the hardened surface zone at which there is still a hardness of 550 HV 1
- hardness curves according to ➤*1396*| *36* and ➤*1396*| *37*
- a hardening depth of ≧ 0,3 mm

The equations are based on the hardness curves normally achieved with skilled heat treatment.

Case hardening

f 12
Case hardening depth

$$CHD \geqq 2{,}73 \cdot 10^{-5} \cdot \frac{p_H}{\left(\frac{1}{r_L} + \frac{2}{D}\right)}$$

Flame and induction hardening

f 13
Surface hardening depth

$$SHD \geqq 10^{-5} \cdot \frac{\left(4{,}4 \cdot \frac{p_H{}^2}{R_{p0,2}} - 3{,}5 \cdot p_H\right)}{\left(\frac{1}{r_L} + \frac{2}{D}\right)}$$

Legend

p_H	N/mm²	Max. Hertzian pressure
CHD	mm	Case hardening depth
SHD	mm	Surface hardening depth
D	mm	Outside diameter of track roller
$R_{p0,2}$	N/mm²	Proof stress of mating track material ➤*1395*| *16*
r_L	mm	Radius of mating track – the raceway must be flat in the direction of the yoke type track roller axis ➤*1392*| *34*.

36
Case hardening depth CHD, hardness curve

CHD = *case hardening depth with hardness 550 HV*
HV = *hardness*
z = *distance from surface*

① *Required hardness*
② *Case hardening*

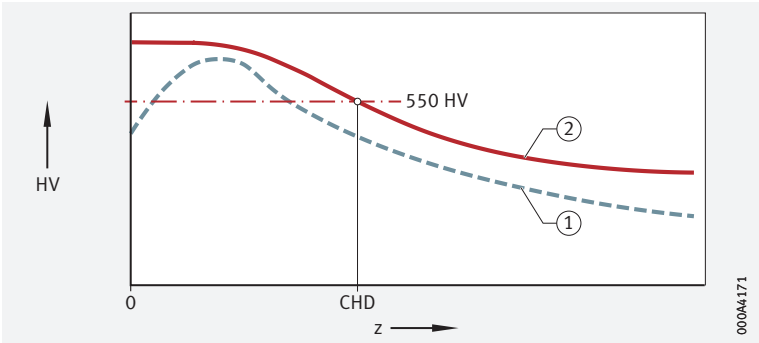

37
Surface hardening depth SHD, hardness curve

SHD = *surface hardening depth*
HV = *hardness*
z = *distance from surface*

① *Required hardness*
② *Flame or induction hardening*

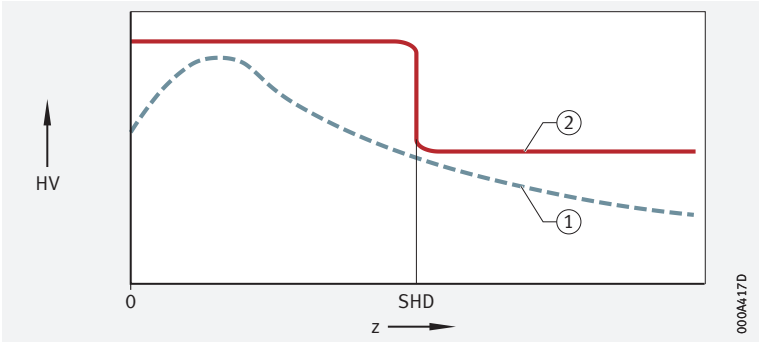

Schaeffler guideways as mating tracks

Ready-to-fit units

The Schaeffler guideways are ready-to-fit units from the Schaeffler linear range. They are to the appropriate grade Q20 for yoke and stud type track rollers and correspond to the dimensions of standard profiles:

- parallelism 20 µm/m
- surface quality Ramax 0,8
- hardness 58 HRC to 62 HRC
- angular misalignment between the raceways max. 1 mrad (1 µm/mm)
- deviations of the guideway cross-section +0,05/+0,015
- length tolerance of the individual guideway +1/0 mm/m

Enquiry and delivery address

Address

Schaeffler Technologies AG & Co. KG
Linear Technology Division
66406 Homburg (Saar)
Internet *www.schaeffler.de/en*
E-mail *info.linear@schaeffler.com*
Telephone 0180 5003872
Fax 0180 5003873

Protection of mating track

The mating track must be protected against contamination. Where necessary, covers and wipers, for instance made from felt, should be placed ahead of the track roller ➤*1397*|*38*.

38
Protection of mating track against contamination

① *Covers*

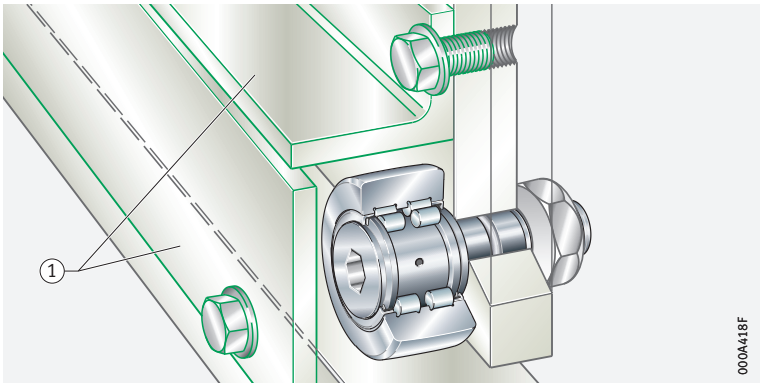

1.17 Mounting and dismounting

Mounting

Track rollers must be handled with care before and during assembly. Their trouble-free operation depends largely on the care taken during mounting.

Guidelines for mounting

The products must be protected against dust, contaminants and moisture. Contaminants have a detrimental influence on the running and operating life of rolling bearings.

Do not cool the bearings excessively. Moisture due to condensation can lead to corrosion in the bearings and bearing seats.

Yoke type track rollers RSTO and STO are not self-retaining. The outer ring and the needle roller and cage assembly are matched to each other and must not be interchanged during mounting with components from other bearings of the same size.

The assembly area must be kept clean and free from dust.

Check the seat of the axis for dimensional, geometrical and positional accuracy and for cleanliness.

The seating surfaces of the bearing rings must be lightly oiled or rubbed with solid lubricant.

After mounting, the bearings must be supplied with lubricant.
Finally, the correct functioning of the bearing arrangement must be checked.

Mounting tools

Depending on the application, the following are suitable:

- induction heaters; note the manufacturer's guidance on grease and seals
- heating cupboard; heating up to +80 °C
- mechanical or hydraulic presses; use mounting sleeves that cover the whole circumference of the bearing ring end faces
- hammer and mounting sleeves; blows should only be applied concentrically to the sleeve

Mounting forces must never be directed through the rolling elements. Avoid direct blows on the bearing rings in all cases. Ensure that the seals are not damaged.

Guidelines for dismounting

Dismounting should be taken into consideration in the original design of the bearing position. If the bearing is to be reused:

- avoid direct blows on the bearing rings
- dismounting forces should not be applied through the rolling elements
- carefully clean the bearings after dismounting
- do not use a concentrated or "hard" flame

Mounting and dismounting of yoke type track rollers

Use a mounting press

If the tolerances are unfavourable, the yoke type track roller should be pressed onto the shaft or stud using a mounting press ➤ *1399* | *39*. The inner ring must be mounted such that the pressing-in force is distributed uniformly over the end face of the inner ring.

Lubrication hole

The bearings must be mounted such that the lubrication hole is positioned in the unloaded zone. For yoke type track rollers PWTR and NNTR, defined positioning of the lubrication hole is not required.

39
Mounting of yoke type track roller using a mounting press

NUTR

① *Mounting press*

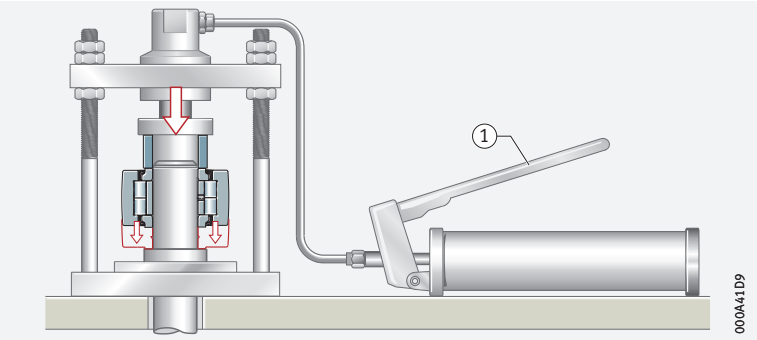

✎ *Axial location*

Yoke type track rollers NUTR, PWTR and NNTR must be axially clamped in place ➤*1399*|*40*.

40
Axial location

PWTR..-2RS

① *Hexagon nut*

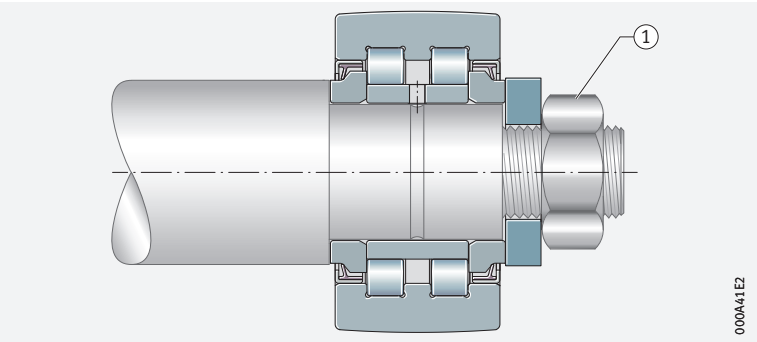

Mounting and dismounting of stud type track rollers

✎ *Use a mounting press*

Stud type track rollers should be mounted using a mounting press if possible ➤*1399*|*39*.

Blows on the flange of the roller stud must be avoided. The position of the lubrication hole is indicated on the flanged side of the roller stud. It must not be positioned in the loaded zone ➤*1391*|*33*.

Drive fit lubrication nipples for stud type track rollers

✎ *Fit the lubrication nipples before mounting the bearings*

Stud type track rollers are supplied with loose drive fit lubrication nipples that must be pressed in correctly before mounting of the bearings ➤*1399*|*41*. For lubrication of stud type track rollers using the central lubrication adapter ➤*1380*|*24*.

Only the lubrication nipples supplied may be used ➤*1400*|*17*.
If lubrication is to be carried out via the locating bore, the axial lubrication holes in the stud type track roller must be closed off using the lubrication nipples before mounting ➤*1399*|*41*.

41
Stud type track roller with drive fit lubrication nipple and dimensions for pressing mandrel

KR..-PP

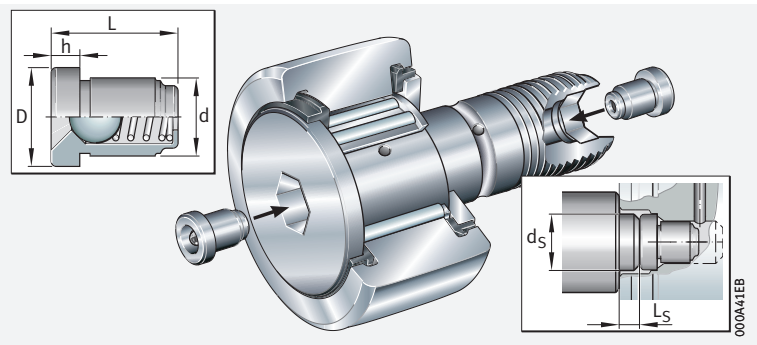

17 *Drive fit lubrication nipples*

Lubrication nipple	Dimensions						Suitable for outside diameter
	D mm	d mm	L mm	h mm	d_S ±0,1 mm	L_S mm	D
NIPA1	6	4	6	1,5[1)]	–	–	16 and 19
NIPA1×4,5	4,7	4	4,5	1	4,5	5	22 to 32
NIPA2×7,5	7,5	6	7,5	2	7,5	6	35 to 52
NIPA3×9,5	9,5	8	9,5	3	10	9	62 to 90

1) *Projection of lubrication nipple, see product tables*

Axial location of stud type track rollers

Secure bearings axially

Stud type track rollers must be axially secured using a hexagon nut. The slot or hexagonal socket on the end of the roller stud can be used to hold the bearing by means of a key while tightening the fixing nut and to adjust the eccentric collar ➤ *1400* | *42*. If heavy vibration occurs, self-locking nuts to DIN 985 or special locking washers can be used.

The tightening torque for the fixing nuts stated in the product tables must be observed. It is only in this way that the permissible radial load can be ensured. If this cannot be adhered to, an interference fit is required. For self-locking nuts, a higher tightening torque must be observed; the advice given by the nut manufacturer must be followed.

42 *Securing the bearing using an Allen key*

① *Allen key*

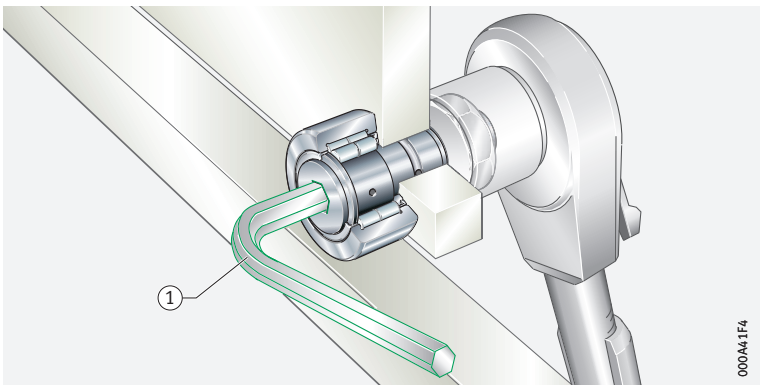

Stud type track rollers with eccentric collar

Highest point on the eccentric collar

The highest point on the eccentric collar is indicated on the roller stud side, which also gives the position of the radial lubrication hole.

Commissioning and relubrication

Position of the relubrication holes

Stud type track rollers have a lubrication hole for relubrication:

- on the flange side of the roller stud
- on the thread-side end face for outside diameters from 22 mm
- on the shank of the roller stud, for outside diameters from 30 mm with an additional lubrication groove

Stud type track rollers with an eccentric collar cannot be relubricated via the stud. The eccentric collar covers the lubrication hole.

For lubrication, only grease guns with needle-point nozzles may be used that have an opening angle ≦ 60° ➤ *1401* | *43*.

Before commissioning, the lubrication holes and feed pipes must be filled with grease in order to ensure protection against corrosion; lubrication can be carried out at the same time.

Lubrication will be more difficult if a rolling element is located over the radial lubrication hole. Relubrication should therefore be carried out with the bearing still warm from operation and rotating if safe to do so, before the bearing comes to rest if safe to do so and before extended breaks in operation.

The grease used for relubrication should be the same as that used for initial greasing. If this is not possible, the miscibility and compatibility of the greases must be checked. Relubrication should continue until a fresh collar of grease appears at the seal gaps. The old grease must be able to leave the bearing unhindered.

43
Relubrication using a grease gun

① *Needle-point nozzle, opening angle ≦ 60°*

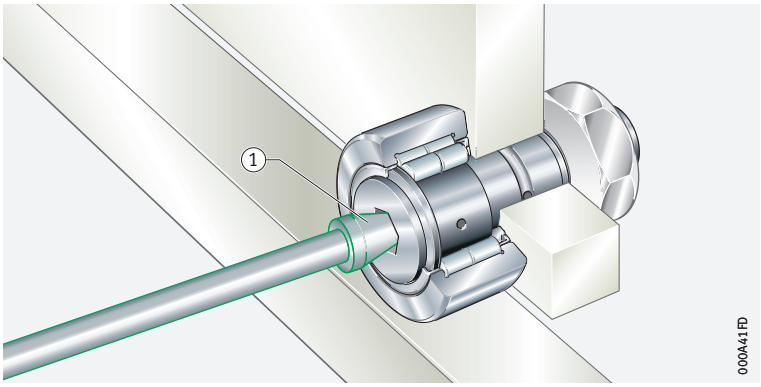

Schaeffler Mounting Handbook

Rolling bearings must be handled with great care

Rolling bearings are well-proven precision machine elements for the design of economical and reliable bearing arrangements, which offer high operational security. In order that these products can function correctly and achieve the envisaged operating life without detrimental effect, they must be handled with care.

The Schaeffler Mounting Handbook MH 1 gives comprehensive information about the correct storage, mounting, dismounting and maintenance of rotary rolling bearings *https://www.schaeffler.de/std/1D53*. It also provides information which should be observed by the designer, in relation to the mounting, dismounting and maintenance of bearings, in the original design of the bearing position. This book is available from Schaeffler on request.

1.18 Legal notice regarding data freshness

The further development of products may also result in technical changes to catalogue products

Of central interest to Schaeffler is the further development and optimisation of its products and the satisfaction of its customers. In order that you, as the customer, can keep yourself optimally informed about the progress that is being made here and with regard to the current technical status of the products, we publish any product changes which differ from the printed version in our electronic product catalogue.

We therefore reserve the right to make changes to the data and illustrations in this catalogue. This catalogue reflects the status at the time of printing. More recent publications released by us (as printed or digital media) will automatically precede this catalogue if they involve the same subject. Therefore, please always use our electronic product catalogue to check whether more up-to-date information or modification notices exist for your desired product.

Link to electronic product catalogue

The following link will take you to the Schaeffler electronic product catalogue: *https://medias.schaeffler.com*.

1.19 Further information

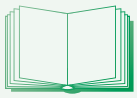

In addition to the data in this chapter, the following chapters in Technical principles must also be observed in the design of bearing arrangements:

- Determining the bearing size ➤*34*
- Rigidity ➤*54*
- Friction and increases in temperature ➤*56*
- Speeds ➤*64*
- Bearing data ➤*97*
- Lubrication ➤*70*
- Sealing ➤*185*
- Design of bearing arrangements ➤*141*
- Mounting and dismounting ➤*194*

Yoke type roller bearing track rollers

Without axial guidance
Open

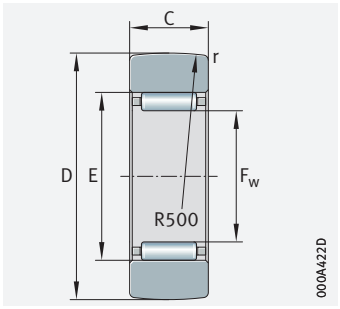

RSTO

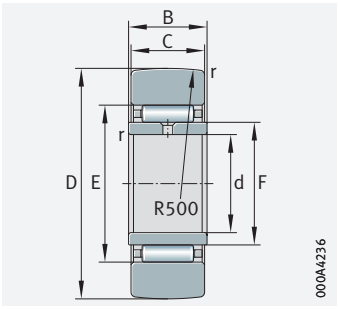

STO

D = 16 – 90 mm

Main dimensions			Basic load ratings		Fatigue limit load	Speed	Mass	Without inner ring Designation	Dimensions	
D	F F_w [1]	C	dyn. C_{rw} N	stat. C_{0rw} N	C_{urw} N	n_{DG} min^{-1}	m ≈ g	➤*1385*|*1.12* ➤*1386*|*1.13*	E	r min.
16	7	7,8	2 550	2 650	335	16 000	8,5	**RST05-TV**	10	0,3
19	10	9,8	3 750	4 600	660	10 000	12,5	**RST06-TV**	13	0,3
24	12	9,8	4 200	5 600	800	8 000	21	**RST08-TV**	15	0,3
30	14	11,8	8 400	9 500	1 390	5 500	42	**RST010**	20	0,3
32	16	11,8	9 000	10 400	1 560	4 500	49	**RST012**	22	0,3
35	20	11,8	9 100	11 100	1 670	3 300	50	**RST015**	26	0,3
40	22	15,8	14 200	18 200	2 550	2 800	88	**RST017**	29	0,3
47	25	15,8	16 100	22 000	3 100	2 400	130	**RST020**	32	0,3
52	30	15,8	16 400	23 500	3 350	1 800	150	**RST025**	37	0,3
62	38	19,8	23 100	35 500	4 800	1 300	255	**RST030**	46	0,6
72	42	19,8	25 000	41 000	5 500	1 100	375	**RST035**	50	0,6
80	50	19,8	23 700	40 000	6 000	850	420	**RST040**	58	1
85	55	19,8	25 000	44 000	6 000	750	453	**RST045**	63	1
90	60	19,8	25 500	47 000	6 400	650	481	**RST050**	68	1

Main dimensions			Basic load ratings		Fatigue limit load	Speed	Mass	With inner ring Designation	Dimensions			
D	F [1]	C	dyn. C_{rw} N	stat. C_{0rw} N	C_{urw} N	n_{DG} min^{-1}	m ≈ g	➤*1385*|*1.12* ➤*1386*|*1.13*	d	B	E	r min.
19	10	9,8	3 750	4 600	660	10 000	17	**STO6-TV**	6	10	13	0,3
24	12	9,8	4 200	5 600	800	8 000	26	**STO8-TV**	8	10	15	0,3
30	14	11,8	8 400	9 500	1 390	5 500	49	**STO10**	10	12	20	0,3
32	16	11,8	9 000	10 400	1 560	4 500	57	**STO12**	12	12	22	0,3
35	20	11,8	9 100	11 100	1 670	3 300	63	**STO15**	15	12	26	0,3
40	22	15,8	14 200	18 200	2 550	2 800	107	**STO17**	17	16	29	0,3
47	25	15,8	16 100	22 000	3 100	2 400	152	**STO20**	20	16	32	0,3
52	30	15,8	16 400	23 500	3 350	1 800	177	**STO25**	25	16	37	0,3
62	38	19,8	23 100	35 500	4 800	1 300	308	**STO30**	30	20	46	0,6
72	42	19,8	25 000	41 000	5 500	1 100	441	**STO35**	35	20	50	0,6
80	50	19,8	23 700	40 000	6 000	850	530	**STO40**	40	20	58	1
85	55	19,8	25 000	44 000	6 000	750	576	**STO45**	45	20	63	1
90	60	19,8	25 500	47 000	6 400	650	617	**STO50**	50	20	68	1

medias *https://www.schaeffler.de/std/1F9A*

[1] F = raceway diameter of inner ring; F_w = needle roller enveloping circle in tolerance class F6.

Yoke type roller bearing track rollers

Without axial guidance
Sealed

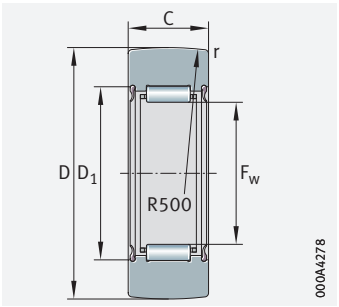

RNA22
With seal 2RSR

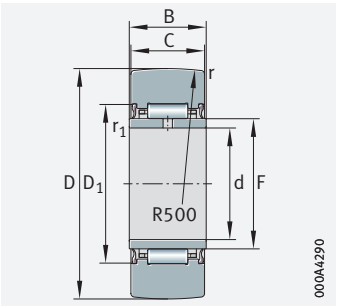

NA22
With seal 2RSR

D = 19 – 90 mm

Main dimensions			Basic load ratings		Fatigue limit load	Speed	Mass	Without inner ring Designation	Dimensions	
D	F F_w [1]	C	dyn. $C_{r\,w}$	stat. $C_{0r\,w}$	$C_{ur\,w}$	$n_{D\,G}$	m	➤*1385|1.12* ➤*1386|1.13*	D_1	r
			N	N	N	min^{-1}	≈ g		min.	min.
19	10	11,8	3 900	3 700	495	9 000	18	**RNA22/6-2RSR**	15,15	0,3
24	12	11,8	4 800	4 300	650	7 000	29	**RNA22/8-2RSR**	18	0,3
30	14	13,8	7 000	6 900	1 120	5 500	52	**RNA2200-2RSR**	20	0,6
32	16	13,8	7 500	8 300	1 290	4 700	57	**RNA2201-2RSR**	22	0,6
35	20	13,8	7 600	9 900	1 390	3 400	60	**RNA2202-2RSR**	26	0,6
40	22	15,8	9 900	14 200	1 870	3 000	94	**RNA2203-2RSR**	28	1
47	25	17,8	14 000	19 300	2 700	2 300	152	**RNA2204-2RSR**	33	1
52	30	17,8	14 400	21 100	2 950	1 800	179	**RNA2205-2RSR**	38	1
62	35	19,8	17 000	26 500	3 600	1 400	284	**RNA2206-2RSR**	43	1
72	42	22,7	21 500	36 500	5 300	1 100	432	**RNA2207-2RSR**	50	1,1
80	48	22,7	26 000	41 500	5 400	850	530	**RNA2208-2RSR**	57	1,1

Main dimensions			Basic load ratings		Fatigue limit load	Speed	Mass	With inner ring Designation	Dimensions				
D	F [1]	C	dyn. $C_{r\,w}$	stat. $C_{0r\,w}$	$C_{ur\,w}$	$n_{D\,G}$	m	➤*1385|1.12* ➤*1386|1.13*	d	B	D_1	r	r_1
			N	N	N	min^{-1}	≈ g				min.	min.	min.
19	10	11,8	3 900	3 700	495	9 000	22	**NA22/6-2RSR**	6	12	16	0,3	0,3
24	12	11,8	4 800	4 300	650	7 000	34	**NA22/8-2RSR**	8	12	18	0,3	0,3
30	14	13,8	7 000	6 900	1 120	5 500	60	**NA2200-2RSR**	10	14	20	0,6	0,3
32	16	13,8	7 500	8 300	1 290	4 700	67	**NA2201-2RSR**	12	14	22	0,6	0,3
35	20	13,8	7 600	9 900	1 390	3 400	75	**NA2202-2RSR**	15	14	26	0,6	0,3
40	22	15,8	9 900	14 200	1 870	3 000	112	**NA2203-2RSR**	17	16	28	1	0,3
47	25	17,8	14 000	19 300	2 700	2 300	177	**NA2204-2RSR**	20	18	33	1	0,3
52	30	17,8	14 400	21 100	2 950	1 800	209	**NA2205-2RSR**	25	18	38	1	0,3
62	35	19,8	17 000	26 500	3 600	1 400	324	**NA2206-2RSR**	30	20	43	1	0,3
72	42	22,7	21 500	36 500	5 300	1 100	505	**NA2207-2RSR**	35	23	50	1,1	0,6
80	48	22,7	26 000	41 500	5 400	850	628	**NA2208-2RSR**	40	23	57	1,1	0,6
90	58	22,7	26 000	44 000	5 700	650	690	**NA2210-2RSR**	50	23	68	1,1	0,6

medias *https://www.schaeffler.de/std/1F9A*

[1] F = raceway diameter of inner ring; F_w = needle roller enveloping circle in tolerance class F6.

Yoke type roller bearing track rollers

With axial guidance
Gap seal or
axial plain washer

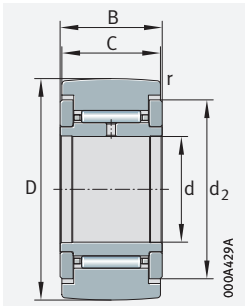

NATR (R = 500 mm)
With gap seal

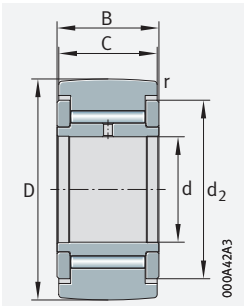

NATV (R = 500 mm)
With gap seal

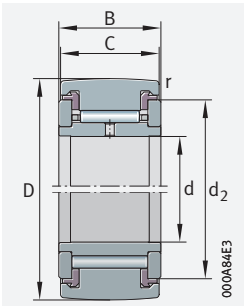

NATR, NATV
With optimised INA profile
With axial plain washer

D = 5 – 50 mm

Main dimensions			Basic load ratings		Fatigue limit load	Speed	Mass	Designation[1]	Mass	Designation[2]	Dimensions		
d	D	B	dyn. C_{rw}	stat. C_{0rw}	C_{urw}	n_{DG}	m	➤*1385|1.12* ➤*1386|1.13*	m	➤*1385|1.12* ➤*1386|1.13*	C	d_2	r
			N	N	N	min^{-1}	≈ g		≈ g				min.
5	16	12	3 150	3 400	460	14 000	14	**NATR5**	14	**NATR5-PP**	11	12,5	0,15
	16	12	4 900	6 700	970	3 800	15	**NATV5**	15	**NATV5-PP**	11	12,5	0,15
6	19	12	3 500	4 050	550	11 000	20	**NATR6**	19	**NATR6-PP**	11	15	0,15
	19	12	5 400	8 100	1 190	3 100	21	**NATV6**	21	**NATV6-PP**	11	15	0,15
8	24	15	5 500	6 700	940	7 500	41	**NATR8**	38	**NATR8-PP**	14	19	0,3
	24	15	7 800	11 700	1 620	2 500	42	**NATV8**	41	**NATV8-PP**	14	19	0,3
10	30	15	6 800	8 700	1 240	5 500	64	**NATR10**	64	**NATR10-PP**	14	23	0,6
	30	15	9 400	15 100	2 080	2 100	65	**NATV10**	64	**NATV10-PP**	14	23	0,6
12	32	15	7 000	9 200	1 320	4 500	71	**NATR12**	66	**NATR12-PP**	14	25	0,6
	32	15	9 700	15 900	2 210	1 800	72	**NATV12**	69	**NATV12-PP**	14	25	0,6
15	35	19	9 700	14 500	1 860	3 600	101	**NATR15**	95	**NATR15-PP**	18	27,6	0,6
	35	19	12 600	23 400	3 250	1 600	109	**NATV15**	101	**NATV15-PP**	18	27,6	0,6
17	40	21	10 900	16 000	2 130	2 900	144	**NATR17**	139	**NATR17-PP**	20	31,5	1
	40	21	14 700	27 000	3 550	1 400	152	**NATV17**	147	**NATV17-PP**	20	31,5	1
20	47	25	15 400	26 000	3 450	2 400	246	**NATR20**	236	**NATR20-PP**	24	36,5	1
	47	25	20 300	42 500	6 000	1 300	254	**NATV20**	245	**NATV20-PP**	24	36,5	1
25	52	25	15 300	27 000	3 600	1 800	275	**NATR25**	271	**NATR25-PP**	24	41,5	1
	52	25	20 200	44 500	6 300	1 000	285	**NATV25**	281	**NATV25-PP**	24	41,5	1
30	62	29	23 200	39 500	5 300	1 300	470	**NATR30**	444	**NATR30-PP**	28	51	1
	62	29	30 000	63 000	9 000	850	481	**NATV30**	468	**NATV30-PP**	28	51	1
35	72	29	24 800	45 000	6 000	1 000	–	–	547	**NATR35-PP**	28	58	1,1
	72	29	32 500	72 000	10 300	750	–	–	630	**NATV35-PP**	28	58	1,1
40	80	32	32 000	59 000	8 400	850	–	–	795	**NATR40-PP**	30	66	1,1
	80	32	40 000	89 000	13 200	650	–	–	832	**NATV40-PP**	30	66	1,1
50	90	32	31 000	60 000	8 500	650	–	–	867	**NATR50-PP**	30	76	1,1
	90	32	39 000	93 000	13 800	550	–	–	969	**NATV50-PP**	30	76	1,1



medias *https://www.schaeffler.de/std/1F9A*

[1] Bearings with gap seals and radius of curvature of R = 500 mm.

[2] Bearings with plastic axial plain washer and optimised INA profile.
Permissible operating temperature: –30 °C to +100 °C (continuous operation).

Yoke type roller bearing track rollers

With axial guidance
Sealed

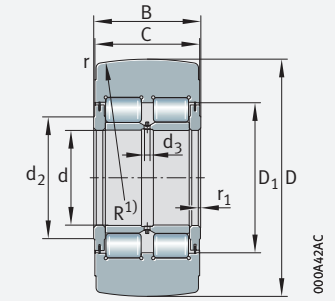

NNTR
With seal 2ZL

D = 130 – 310 mm

Main dimensions			Basic load ratings				Fatigue limit load	Speed	Mass	Designation[1]
D	d	B	dyn. $C_{r\,w}$	stat. $C_{0r\,w}$	dyn. $F_{r\,per}$	stat. $F_{0r\,per}$	$C_{ur\,w}$	$n_{D\,G}$	m	➤*1385|1.12* ➤*1386|1.13*
h10			N	N	N	N	N	min^{-1}	≈ kg	
130	50	65	193 000	270 000	270 000	270 000	37 500	1 100	5,2	**NNTR50×130×65-2ZL**
140	55	70	226 000	320 000	280 000	320 000	45 500	850	6,4	**NNTR55×140×70-2ZL**
150	60	75	255 000	370 000	330 000	370 000	54 000	800	7,8	**NNTR60×150×75-2ZL**
160	65	75	280 000	400 000	350 000	400 000	57 000	700	8,8	**NNTR65×160×75-2ZL**
180	70	85	355 000	520 000	465 000	520 000	76 000	600	13	**NNTR70×180×85-2ZL**
200	80	90	415 000	620 000	550 000	620 000	88 000	500	16,8	**NNTR80×200×90-2ZL**
220	90	100	500 000	760 000	600 000	760 000	106 000	400	22,5	**NNTR90×220×100-2ZL**
240	100	105	560 000	880 000	710 000	880 000	120 000	340	28	**NNTR100×240×105-2ZL**
260	110	115	670 000	1 060 000	820 000	1 060 000	145 000	300	35,6	**NNTR110×260×115-2ZL**
290	120	135	880 000	1 420 000	1 110 000	1 420 000	190 000	260	52,8	**NNTR120×290×135-2ZL**
310	130	146	1 010 000	1 650 000	1 280 000	1 650 000	220 000	240	65,2	**NNTR130×310×146-2ZL**

Dimensions				Mounting dimensions			Number of lubrication holes	Designation[1]
D	C	r	r_1	d_2	D_1	d_3		➤*1385|1.12* ➤*1386|1.13*
h10		min.	min.					
130	63	3	2	63	80	3	3	**NNTR50×130×65-2ZL**
140	68	3	2	73	91	4	3	**NNTR55×140×70-2ZL**
150	73	3	2	78	97	4	3	**NNTR60×150×75-2ZL**
160	73	3	2	82	103	5	3	**NNTR65×160×75-2ZL**
180	83	3	2	92	115	5	3	**NNTR70×180×85-2ZL**
200	88	4	2	102	127	5	3	**NNTR80×200×90-2ZL**
220	98	4	2,5	119	146	5	3	**NNTR90×220×100-2ZL**
240	103	4	2,5	132	160	6	6	**NNTR100×240×105-2ZL**
260	113	4	2,5	143	174	6	6	**NNTR110×260×115-2ZL**
290	133	4	3	155	191	8	6	**NNTR120×290×135-2ZL**
310	144	5	3	165	204	8	6	**NNTR130×310×146-2ZL**

medias *https://www.schaeffler.de/std/1F9A*

[1] Radius of curvature R = 10 000 for NNTR50×130×65-2ZL to NNTR110×260×115-2ZL.
Radius of curvature R = 15 000 for NNTR120×290×135-2ZL to NNTR130×310×146-2ZL.



Yoke type roller bearing track rollers

With optimised INA profile
and axial guidance
Sealed

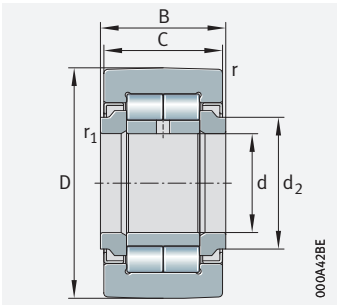

NUTR
With optimised INA profile and labyrinth seal

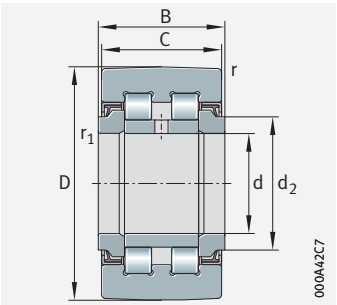

PWTR
With optimised INA profile and seal 2RS

D = 35 – 110 mm

Main dimensions			Basic load ratings				Fatigue limit load	Speed	Mass	Designation	Dimensions			
D	d	B	dyn. $C_{r\,w}$	stat. $C_{0r\,w}$	dyn. $F_{r\,per}$	stat. $F_{0r\,per}$	$C_{ur\,w}$	$n_{D\,G}$	m	➤*1385*|*1.12* ➤*1386*|*1.13* X-life ➤*1371*	C	d_2	r	r_1
			N	N	N	N	N	min^{-1}	≈ g				min.	min.
35	15	19	15 300	19 000	8 500	16 800	2 480	6 500	99	**NUTR15**	18	20	0,6	0,3
	15	19	12 600	14 900	10 600	14 900	1 790	6 000	99	**PWTR15-2RS-XL**	18	20	0,6	0,3
40	17	21	18 800	25 500	12 900	25 500	3 250	5 500	147	**NUTR17**	20	22	1	0,5
	17	21	14 300	18 200	16 400	18 200	2 200	5 000	147	**PWTR17-2RS-XL**	20	22	1	0,5
42	15	19	18 300	24 700	24 700	24 700	3 150	6 500	158	**NUTR1542**	18	20	0,6	0,3
	15	19	14 700	16 200	16 200	16 200	2 180	6 000	158	**PWTR1542-2RS-XL**	18	20	0,6	0,3
47	17	21	21 600	31 000	31 000	31 000	3 900	5 500	220	**NUTR1747**	20	22	1	0,5
	17	21	15 900	18 400	18 400	18 400	2 480	5 000	220	**PWTR1747-2RS-XL**	20	22	1	0,5
	20	25	28 500	38 000	16 200	32 500	4 950	4 200	245	**NUTR20**	24	27	1	0,5
	20	25	24 600	31 000	20 600	31 000	3 800	3 800	245	**PWTR20-2RS-XL**	24	27	1	0,5
52	20	25	31 500	44 500	38 000	44 500	5 800	4 200	321	**NUTR2052**	24	27	1	0,5
	20	25	27 000	35 500	31 000	35 500	4 350	3 800	321	**PWTR2052-2RS-XL**	24	27	1	0,5
	25	25	29 500	41 500	17 000	33 500	5 400	4 200	281	**NUTR25**	24	31	1	0,5
	25	25	25 500	33 500	21 800	33 500	4 200	3 800	281	**PWTR25-2RS-XL**	24	31	1	0,5
62	25	25	35 500	54 000	54 000	54 000	7 000	4 200	450	**NUTR2562**	24	31	1	0,5
	25	25	30 000	42 500	42 500	42 500	5 300	3 800	450	**PWTR2562-2RS-XL**	24	31	1	0,5
	30	29	40 500	55 000	23 300	46 000	7 400	2 600	465	**NUTR30**	28	38	1	0,5
	30	29	35 000	46 000	29 000	46 000	5 900	2 200	465	**PWTR30-2RS-XL**	28	38	1	0,5

medias *https://www.schaeffler.de/std/1F9A*

Main dimensions			Basic load ratings				Fatigue limit load	Speed	Mass	Designation	Dimensions			
D	d	B	dyn. $C_{r\,w}$	stat. $C_{0r\,w}$	dyn. $F_{r\,per}$	stat. $F_{0r\,per}$	$C_{ur\,w}$	$n_{D\,G}$	m	➤*1385* | *1.12* ➤*1386* | *1.13* X-life ➤*1371*	C	d_2	r	r_1
			N	N	N	N	N	min^{-1}	≈ g				min.	min.
72	30	29	48 000	71 000	68 000	71 000	9 300	2 600	697	**NUTR3072**	28	38	1	0,5
	30	29	41 000	56 000	54 000	56 000	7 300	2 200	697	**PWTR3072-2RS-XL**	28	38	1	0,5
	35	29	45 000	66 000	31 500	62 000	8 900	2 100	630	**NUTR35**	28	44	1,1	0,6
	35	29	39 000	55 000	38 500	55 000	7 100	1 800	630	**PWTR35-2RS-XL**	28	44	1,1	0,6
80	35	29	51 000	79 000	76 000	79 000	10 500	2 100	836	**NUTR3580**	28	44	1,1	0,6
	35	29	43 500	65 000	59 000	65 000	8 300	1 800	836	**PWTR3580-2RS-XL**	28	44	1,1	0,6
	40	32	56 000	81 000	31 000	60 000	11 300	1 600	816	**NUTR40**	30	50,5	1,1	0,6
	40	32	45 000	62 000	39 500	62 000	8 000	1 500	816	**PWTR40-2RS-XL**	30	50,5	1,1	0,6
85	45	32	56 000	85 000	31 500	62 000	11 700	1 400	883	**NUTR45**	30	55,2	1,1	0,6
	45	32	45 500	64 000	41 000	64 000	8 400	1 300	883	**PWTR45-2RS-XL**	30	55,2	1,1	0,6
90	40	32	66 000	103 000	84 000	103 000	14 200	1 600	1 129	**NUTR4090**	30	50,5	1,1	0,6
	40	32	52 000	77 000	67 000	77 000	9 800	1 500	1 129	**PWTR4090-2RS-XL**	30	50,5	1,1	0,6
	50	32	57 000	88 000	32 500	63 000	12 200	1 300	950	**NUTR50**	30	59,8	1,1	0,6
	50	32	46 000	67 000	42 000	67 000	8 700	1 100	950	**PWTR50-2RS-XL**	30	59,8	1,1	0,6
100	45	32	72 000	116 000	106 000	116 000	16 100	1 400	1 396	**NUTR45100**	30	55,2	1,1	0,6
	45	32	56 000	86 000	86 000	86 000	11 100	1 300	1 396	**PWTR45100-2RS-XL**	30	55,2	1,1	0,6
110	50	32	76 000	130 000	128 000	130 000	17 900	1 300	1 690	**NUTR50110**	30	59,8	1,1	0,6
	50	32	59 000	95 000	95 000	95 000	12 300	1 100	1 690	**PWTR50110-2RS-XL**	30	59,8	1,1	0,6



medias *https://www.schaeffler.de/std/1F9A*

Stud type needle roller bearing track rollers

With axial guidance
Open or sealed

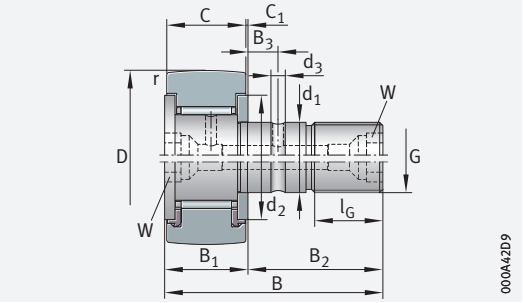

D ≧ 22 mm: KR (top: R = 500 mm);
KR..-PP (bottom: with optimised INA profile)

D = 16 – 32 mm

Main dimensions			Basic load ratings		Fatigue limit load	Speed	Mass	Designation	Mass	With eccentric collar Designation
D	d_1	B	dyn. C_{rw}	stat. C_{0rw}	C_{urw}	n_{DG}	m	➤*1385|1.12* ➤*1386|1.13*	m	➤*1385|1.12* ➤*1386|1.13*
	h7		N	N	N	min^{-1}	≈ g		≈ g	
16	6	28	3 150	3 400	460	14 000	19	**KR16**[3]	–	–
	6	28	3 150	3 400	460	14 000	18	**KR16-PP**[3]	20	**KRE16-PP**[3]
	6	28	3 150	3 400	460	14 000	19	**KR16-SK-PP**[4]	–	–
	6	28	4 900	6 700	970	3 800	19	**KRV16-PP**[3]	–	–
19	8	32	3 500	4 050	550	11 000	29	**KR19**[3]	–	–
	8	32	3 500	4 050	550	11 000	29	**KR19-PP**[3]	32	**KRE19-PP**[3]
	8	32	3 500	4 050	550	11 000	29	**KR19-SK-PP**[4]	–	–
	8	32	5 400	8 100	1 190	3 100	31	**KRV19-PP**[3]	–	–
22	10	36	4 550	5 400	740	8 000	45	**KR22**	–	–
	10	36	4 550	5 400	740	8 000	43	**KR22-PP**	47	**KRE22-PP**
	10	36	6 200	9 300	1 230	2 600	45	**KRV22-PP**	–	–
26	10	36	5 100	6 500	860	8 000	59	**KR26**	–	–
	10	36	5 100	6 500	860	8 000	57	**KR26-PP**	62	**KRE26-PP**
	10	36	7 300	11 600	1 520	2 600	59	**KRV26-PP**	–	–
30	12	40	6 800	8 700	1 240	5 500	92	**KR30**	–	–
	12	40	6 800	8 700	1 240	5 500	88	**KR30-PP**	93	**KRE30-PP**
	12	40	9 400	15 100	2 080	2 100	91	**KRV30-PP**	–	–
32	12	40	7 100	9 300	1 320	5 500	103	**KR32**	–	–
	12	40	7 100	9 300	1 320	5 500	98	**KR32-PP**	104	**KRE32-PP**
	12	40	10 000	16 300	2 240	2 100	101	**KRV32-PP**	–	–

medias *https://www.schaeffler.de/std/1F9A*

[1] Drive fit lubrication nipples are supplied loose. Only these lubrication nipples should be used.
[2] Nominal dimension for hexagonal socket.
[3] Relubrication hole only on the flange-side end face with slot for countertensioning during fitting.
[4] Hexagonal socket only on the flange-side end face. No relubrication facility.

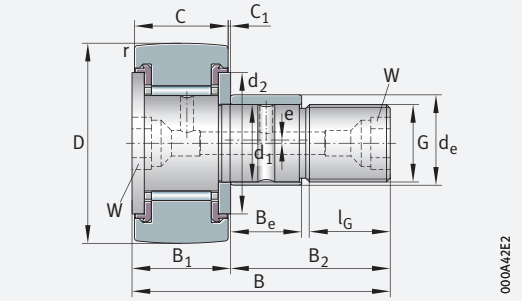

D ≧ 22 mm: KRE..-PP, with optimised INA profile

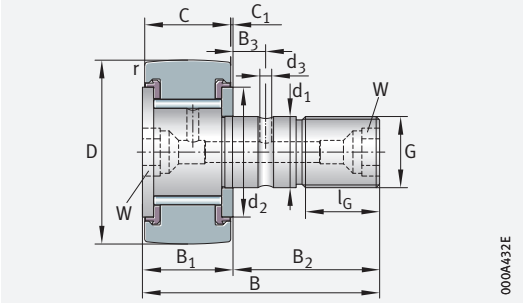

D ≧ 22 mm: KRV..-PP, with optimised INA profile

Dimensions														Drive fit lubrication nipple[1]	Nut tightening torque
D	B_1	B_2	B_3	C	C_1	r	d_2	d_3	G	l_G	W[2]	Eccentric collar				
												d_e	B_e	e		M_A
	max.					min.						h9				Nm
16	12,2	16	–	11	0,6	0,15	12,5	–	M6×1	8	–	–	–	–	NIPA1	3
	12,2	16	–	11	0,6	0,15	12,5	–	M6×1	8	–	9	7	0,5	NIPA1	3
	12,2	16	–	11	0,6	0,15	12,5	–	M6×1	8	4	–	–	–	–	3
	12,2	16	–	11	0,6	0,15	12,5	–	M6×1	8	–	–	–	–	NIPA1	3
19	12,2	20	–	11	0,6	0,15	15	–	M8×1,25	10	–	–	–	–	NIPA1	8
	12,2	20	–	11	0,6	0,15	15	–	M8×1,25	10	–	11	9	0,5	NIPA1	8
	12,2	20	–	11	0,6	0,15	15	–	M8×1,25	10	4	–	–	–	–	8
	12,2	20	–	11	0,6	0,15	15	–	M8×1,25	10	–	–	–	–	NIPA1	8
22	13,2	23	–	12	0,6	0,3	17,5	–	M10×1	12	5	–	–	–	NIPA1×4,5	15
	13,2	23	–	12	0,6	0,3	17,5	–	M10×1	12	5	13	10	0,5	NIPA1×4,5	15
	13,2	23	–	12	0,6	0,3	17,5	–	M10×1	12	5	–	–	–	NIPA1×4,5	15
26	13,2	23	–	12	0,6	0,3	17,5	–	M10×1	12	5	–	–	–	NIPA1×4,5	15
	13,2	23	–	12	0,6	0,3	17,5	–	M10×1	12	5	13	10	0,5	NIPA1×4,5	15
	13,2	23	–	12	0,6	0,3	17,5	–	M10×1	12	5	–	–	–	NIPA1×4,5	15
30	15,2	25	6	14	0,6	0,6	23	3	M12×1,5	13	6	–	–	–	NIPA1×4,5	22
	15,2	25	6	14	0,6	0,6	23	3	M12×1,5	13	6	15	11	0,5	NIPA1×4,5	22
	15,2	25	6	14	0,6	0,6	23	3	M12×1,5	13	6	–	–	–	NIPA1×4,5	22
32	15,2	25	6	14	0,6	0,6	23	3	M12×1,5	13	6	–	–	–	NIPA1×4,5	22
	15,2	25	6	14	0,6	0,6	23	3	M12×1,5	13	6	15	11	0,5	NIPA1×4,5	22
	15,2	25	6	14	0,6	0,6	23	3	M12×1,5	13	6	–	–	–	NIPA1×4,5	22

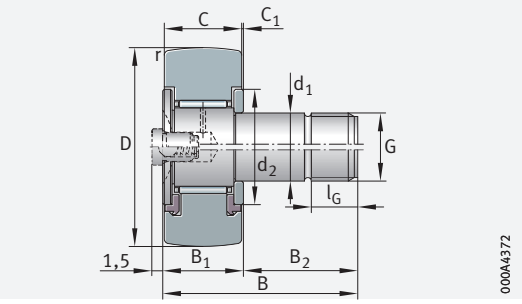

KR16, KR19 (top)
KR16-PP, KR19-PP (KRV16-PP, KRV19-PP) (bottom)

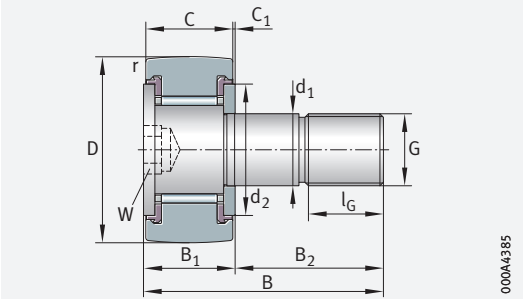

KR16-SK-PP, KR19-SK-PP

Stud type needle roller bearing track rollers

With axial guidance
Open or sealed

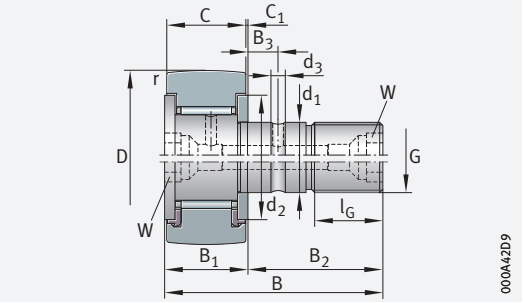

KR (top: R = 500 mm);
KR..-PP (bottom: with optimised INA profile)

D = 35 – 90 mm

Main dimensions			Basic load ratings		Fatigue limit load	Speed	Mass	Designation	Mass	With eccentric collar Designation
D	d_1	B	dyn. C_{rw}	stat. C_{0rw}	C_{urw}	n_{DG}	m	➤*1385|1.12* ➤*1386|1.13*	m	➤*1385|1.12* ➤*1386|1.13*
	h7		N	N	N	min^{-1}	≈ g		≈ g	
35	16	52	9 700	14 500	1 860	3 600	173	**KR35**	–	–
	16	52	9 700	14 500	1 860	3 600	164	**KR35-PP**	177	**KRE35-PP**
	16	52	12 600	23 400	3 250	1 600	166	**KRV35-PP**	–	–
40	18	58	10 900	16 000	2 130	2 900	247	**KR40**	–	–
	18	58	10 900	16 000	2 130	2 900	239	**KR40-PP**	255	**KRE40-PP**
	18	58	14 700	27 000	3 550	1 400	247	**KRV40-PP**	–	–
47	20	66	15 400	26 000	3 450	2 400	381	**KR47-PP**	400	**KRE47-PP**
	20	66	20 300	42 500	6 000	1 300	390	**KRV47-PP**	–	–
52	20	66	16 600	29 500	3 850	2 400	454	**KR52-PP**	473	**KRE52-PP**
	20	66	22 300	48 500	6 800	1 300	463	**KRV52-PP**	–	–
62	24	80	26 000	48 500	7 000	1 900	770	**KR62-PP**	789	**KRE62-PP**
	24	80	33 500	76 000	11 400	1 100	787	**KRV62-PP**	–	–
72	24	80	28 000	53 000	7 300	1 900	1 010	**KR72-PP**	1 038	**KRE72-PP**
	24	80	36 500	86 000	12 800	1 100	1 027	**KRV72-PP**	–	–
80	30	100	38 500	78 000	11 200	1 300	1 608	**KR80-PP**	1 665	**KRE80-PP**
	30	100	48 500	118 000	17 600	850	1 636	**KRV80-PP**	–	–
90	30	100	40 500	84 000	11 900	1 300	1 975	**KR90-PP**	2 032	**KRE90-PP**
	30	100	52 000	130 000	19 400	850	2 003	**KRV90-PP**	–	–

medias *https://www.schaeffler.de/std/1F9A*

1) Drive fit lubrication nipples are supplied loose. Only these lubrication nipples should be used.

2) Nominal dimension for hexagonal socket.
Suitable central lubrication adapter for connection to a central lubrication system ➤*1379*.

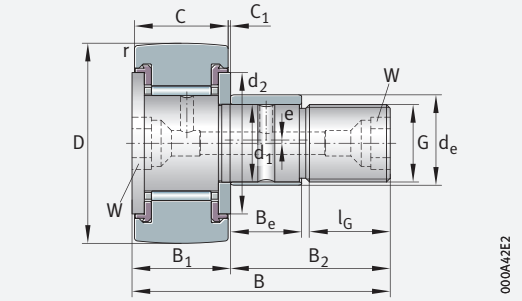

KRE..-PP, with optimised INA profile

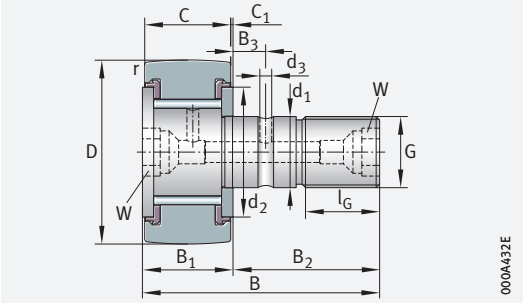

KRV..-PP, with optimised INA profile

Dimensions															Drive fit lubrication nipple[1]	Nut tightening torque
D	B_1	B_2	B_3	C	C_1	r	d_2	d_3	G	l_G	W[2]	Eccentric collar				M_A
												d_e	B_e	e		
	max.					min.						h9				Nm
35	19,6	32,5	8	18	0,8	0,6	27,6	3	M16×1,5	17	8	–	–	–	NIPA2×7,5	58
	19,6	32,5	8	18	0,8	0,6	27,6	3	M16×1,5	17	8	20	14	1	NIPA2×7,5	58
	19,6	32,5	8	18	0,8	0,6	27,6	3	M16×1,5	17	8	–	–	–	NIPA2×7,5	58
40	21,6	36,5	8	20	0,8	1	31,5	3	M18×1,5	19	8	–	–	–	NIPA2×7,5	87
	21,6	36,5	8	20	0,8	1	31,5	3	M18×1,5	19	8	22	16	1	NIPA2×7,5	87
	21,6	36,5	8	20	0,8	1	31,5	3	M18×1,5	19	8	–	–	–	NIPA2×7,5	87
47	25,6	40,5	9	24	0,8	1	36,5	4	M20×1,5	21	10	24	18	1	NIPA2×7,5	120
	25,6	40,5	9	24	0,8	1	36,5	4	M20×1,5	21	10	–	–	–	NIPA2×7,5	120
52	25,6	40,5	9	24	0,8	1	36,5	4	M20×1,5	21	10	24	18	1	NIPA2×7,5	120
	25,6	40,5	9	24	0,8	1	36,5	4	M20×1,5	21	10	–	–	–	NIPA2×7,5	120
62	30,6	49,5	11	29	0,8	1	44	4	M24×1,5	25	14	28	22	1	NIPA3×9,5	220
	30,6	49,5	11	29	0,8	1	44	4	M24×1,5	25	14	–	–	–	NIPA3×9,5	220
72	30,6	49,5	11	29	0,8	1,1	44	4	M24×1,5	25	14	28	22	1	NIPA3×9,5	220
	30,6	49,5	11	29	0,8	1,1	44	4	M24×1,5	25	14	–	–	–	NIPA3×9,5	220
80	37	63	15	35	1	1,1	53	4	M30×1,5	32	14	35	29	1,5	NIPA3×9,5	450
	37	63	15	35	1	1,1	53	4	M30×1,5	32	14	–	–	–	NIPA3×9,5	450
90	37	63	15	35	1	1,1	53	4	M30×1,5	32	14	35	29	1,5	NIPA3×9,5	450
	37	63	15	35	1	1,1	53	4	M30×1,5	32	14	–	–	–	NIPA3×9,5	450



Stud type cylindrical roller bearing track rollers

With axial guidance

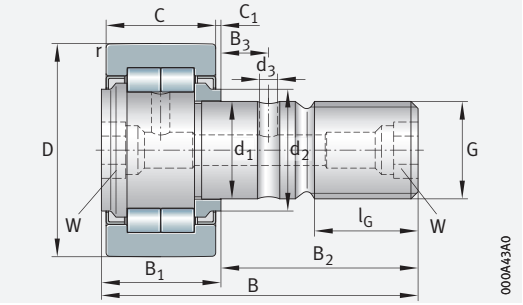

NUKR, with optimised INA profile

D = 35 – 90 mm

Main dimensions			Basic load ratings				Fatigue limit load	Speed	Mass	Without eccentric collar Designation	Mass	With eccentric collar Designation
D	d_1	B	dyn. $C_{r\,w}$	stat. $C_{0r\,w}$	dyn. $F_{r\,per}$	stat. $F_{0r\,per}$	$C_{ur\,w}$	$n_{D\,G}$	m	➤*1385*|*1.12* ➤*1386*|*1.13* X-life ➤*1371*	m	➤*1385*|*1.12* ➤*1386*|*1.13* X-life ➤*1371*
	h7		N	N	N	N	N	min^{-1}	≈ g		≈ g	
35	16	52	15 300	19 000	8 500	16 800	2 480	6 500	164	**NUKR35**	–	–
	16	52	15 300	19 000	8 500	16 800	2 480	6 500	–	–	177	**NUKRE35**
	16	52	12 600	14 900	10 600	14 900	1 790	6 000	164	**PWKR35-2RS-XL**	–	–
	16	52	12 600	14 900	10 600	14 900	1 790	6 000	–	–	177	**PWKRE35-2RS-XL**
40	18	58	18 800	25 500	12 900	25 500	3 250	5 500	242	**NUKR40**	–	–
	18	58	18 800	25 500	12 900	25 500	3 250	5 500	–	–	258	**NUKRE40**
	18	58	14 300	18 200	16 400	18 200	2 200	5 000	242	**PWKR40-2RS-XL**	–	–
	18	58	14 300	18 200	16 400	18 200	2 200	5 000	–	–	258	**PWKRE40-2RS-XL**
47	20	66	28 500	38 000	16 200	32 500	4 950	4 200	380	**NUKR47**	400	**NUKRE47**
	20	66	24 600	31 000	20 600	31 000	3 800	3 800	380	**PWKR47-2RS-XL**	400	**PWKRE47-2RS-XL**
52	20	66	29 500	41 500	17 000	33 500	5 400	4 200	450	**NUKR52**	470	**NUKRE52**
	20	66	25 500	33 500	21 800	33 500	4 200	3 800	450	**PWKR52-2RS-XL**	470	**PWKRE52-2RS-XL**
62	24	80	40 500	55 000	23 300	46 000	7 400	2 600	795	**NUKR62**	824	**NUKRE62**
	24	80	35 000	46 000	29 000	46 000	5 900	2 200	795	**PWKR62-2RS-XL**	824	**PWKRE62-2RS-XL**
72	24	80	45 000	66 000	31 500	62 000	8 900	2 600	1 020	**NUKR72**	1 050	**NUKRE72**
	24	80	39 000	55 000	38 500	55 000	7 100	2 200	1 020	**PWKR72-2RS-XL**	1 050	**PWKRE72-2RS-XL**
80	30	100	69 000	105 000	47 000	94 000	14 300	1 800	1 600	**NUKR80**	1 670	**NUKRE80**
	30	100	56 000	80 000	60 000	80 000	10 800	1 800	1 600	**PWKR80-2RS-XL**	1 670	**PWKRE80-2RS-XL**
90	30	100	79 000	126 000	76 000	126 000	17 000	1 800	1 960	**NUKR90**	2 020	**NUKRE90**
	30	100	62 000	92 000	92 000	92 000	12 500	1 800	1 960	**PWKR90-2RS-XL**	2 020	**PWKRE90-2RS-XL**

medias *https://www.schaeffler.de/std/1F9A*

1) Drive fit lubrication nipples are supplied loose. Only these lubrication nipples should be used.

2) Nominal dimension for hexagonal socket.
Suitable central lubrication adapter for connection to a central lubrication system ➤*1379*.

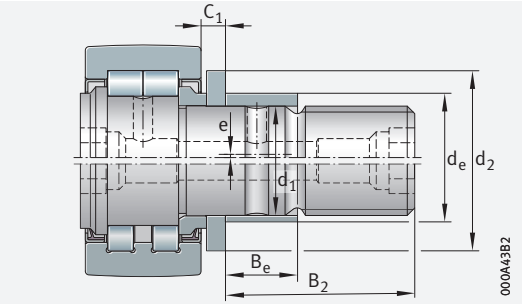

NUKRE35/NUKRE40 (top)
PWKRE35-2RS/PWKRE40-2RS (bottom)
with optimised INA profile

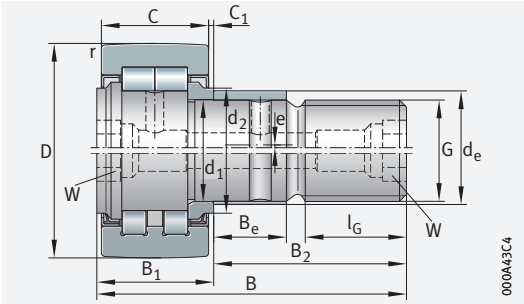

NUKRE (top)
PWKRE..-2RS (bottom)
with optimised INA profile

Dimensions														Drive fit lubrication nipple[1]	Nut tightening torque
D	B_1	B_2	B_3	C	C_1	r	d_2	d_3	G	l_G	W[2]	Eccentric collar			
												d_e	B_e	e	
	max.					min.						h9			Nm
35	19,6	32,5	7,8	18	0,8	0,6	20	3	M16×1,5	17	8	–	–	–	NIPA2×7,5	58
	22,6	29,5	–	18	3,8	0,6	27,6	–	M16×1,5	17	8	20	12	1	NIPA2×7,5	58
	19,6	32,5	7,8	18	0,8	0,6	20	3	M16×1,5	17	8	–	–	–	NIPA2×7,5	58
	22,6	29,5	–	18	3,8	0,6	27,6	–	M16×1,5	17	8	20	12	1	NIPA2×7,5	58
40	21,6	36,5	8	20	0,8	1	22	3	M18×1,5	19	8	–	–	–	NIPA2×7,5	87
	24,6	33,5	–	20	3,8	1	30	–	M18×1,5	19	8	22	14	1	NIPA2×7,5	87
	21,6	36,5	8	20	0,8	1	22	3	M18×1,5	19	8	–	–	–	NIPA2×7,5	87
	24,6	33,5	–	20	3,8	1	30	–	M18×1,5	19	8	22	14	1	NIPA2×7,5	87
47	25,6	40,5	9	24	0,8	1	27	4	M20×1,5	21	10	24	18	1	NIPA2×7,5	120
	25,6	40,5	9	24	0,8	1	27	4	M20×1,5	21	10	24	18	1	NIPA2×7,5	120
52	25,6	40,5	9	24	0,8	1	31	4	M20×1,5	21	10	24	18	1	NIPA2×7,5	120
	25,6	40,5	9	24	0,8	1	31	4	M20×1,5	21	10	24	18	1	NIPA2×7,5	120
62	30,6	49,5	11	28	1,3	1	38	4	M24×1,5	25	14	28	22	1	NIPA3×9,5	220
	30,6	49,5	11	28	1,3	1	38	4	M24×1,5	25	14	28	22	1	NIPA3×9,5	220
72	30,6	49,5	11	28	1,3	1,1	44	4	M24×1,5	25	14	28	22	1	NIPA3×9,5	220
	30,6	49,5	11	28	1,3	1,1	44	4	M24×1,5	25	14	28	22	1	NIPA3×9,5	220
80	37	63	15	35	1	1,1	47	4	M30×1,5	32	14	35	29	1,5	NIPA3×9,5	450
	37	63	15	35	1	1,1	47	4	M30×1,5	32	14	35	29	1,5	NIPA3×9,5	450
90	37	63	15	35	1	1,1	47	4	M30×1,5	32	14	35	29	1,5	NIPA3×9,5	450
	37	63	15	35	1	1,1	47	4	M30×1,5	32	14	35	29	1,5	NIPA3×9,5	450

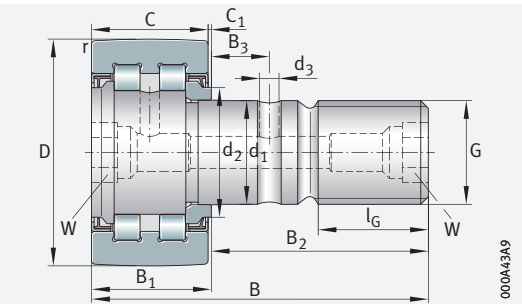

PWKR..-2RS, with optimised INA profile

2 Yoke type ball bearing track rollers, stud type ball bearing track rollers

Ball bearing track rollers:

- are ready-to-fit, single or double row rolling bearings based on deep groove or angular contact ball bearings ➤*1417*|*2* to ➤*1419*|*6*
- are supplied with or without a stud (designs without a stud are mounted on shafts or studs)
- have particularly thick-walled outer rings with a crowned or cylindrical outside surface ➤*1416*|*2.1*
- can support high radial loads ➤*1420*|*2.2*
- tolerate axial loads which are due to small misalignment defects, skewed running or temporary contact running impacts
- are sealed on both sides ➤*1421*|*2.5*
- are also available with a plastic tyre on the outer ring for low-noise running ➤*1416*|*2.1*, ➤*1419*|*6*
- are not mounted in a housing bore, but are supported on a flat mating track ➤*1416*|*1* and ➤*1418*|*5*
- can be adjusted to the mating track in the design with the eccentric collar, thus permitting, for example, larger manufacturing tolerances in the adjacent construction

1
Double row stud type track roller supported on a flat mating track

① *Mating track*

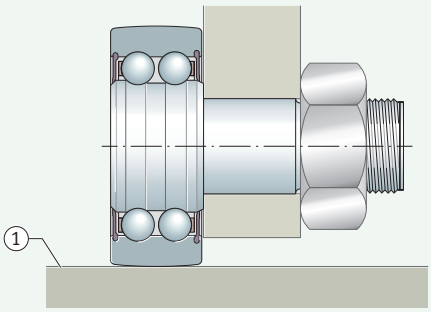

2.1 Bearing design

Design variants

The bearings are available as:

- yoke type track rollers (single or double row) ➤*1417*|*2*
- stud type track rollers (single or double row) ➤*1418*|*3* to ➤*1418*|*5*
- track rollers with plastic outer tyre ➤*1419*|*6*

Ball bearing track rollers (general)

Characterised by a thick-walled outer ring

Ball bearing track rollers are self-retaining, single or double row ball bearings with particularly thick-walled outer rings. In addition to high radial forces, these bearings can also support axial forces in both directions. Ball bearing track rollers are available for various applications with an inner ring, with a stud and with a plastic tyre on the outer ring ➤*1417*|*2* to ➤*1419*|*6*.

✎ *Applications*

Typical areas of application of these products include cam gears, bed ways, conveying equipment and linear guidance systems.

Outside surface profile of the outer ring

✎ *Spherical or cylindrical outside surface*

Yoke type track rollers and stud type track rollers with a crowned outside surface have a radius of curvature of R = 500 mm. Yoke type track rollers with a cylindrical outside surface have the suffix X ➤ *1423* | ▦ *3*.

✎ *The crowned outside surface prevents edge stresses under skewing*

Yoke type track rollers with a crowned outside surface are used where skewing can occur relative to the mating track. The crowned design reduces the risk of edge stresses ➤ *1378*.

Corrosion protection by Corrotect

✎ *Special coating Corrotect*

For applications requiring increased protection against corrosion, yoke type track rollers with the special Cr(VI)-free coating Corrotect are available by agreement as a special design; description of Corrotect ➤ *1376*.

Yoke type track rollers

✎ *Comparable in design to deep groove or angular contact ball bearings*

Yoke type track rollers are similar in construction to deep groove or angular contact ball bearings and are mounted on shafts or studs ➤ *1417* | 🗀 *2*. They have outer rings with a crowned or cylindrical outside surface, inner rings and ball and cage assemblies with plastic cages. Yoke type track rollers LR6, LR60 and LR2 are single row, LR50, LR52 and LR53 are double row.

Double row design

✎ *LR52, LR53*

While the outer dimensions remain unchanged, the internal construction of yoke type track rollers LR52 and LR53 has been optimised.
This has brought about an increase in load carrying capacity and speed in continuous operation, and in grease lubrication $n_{D\,G}$. These yoke type track rollers are X-life bearings ➤ *1419*.

🗀 ***2***

Yoke type track rollers, sealed on both sides

F_r = *radial load*
F_a = *axial load*

① *Single row, lip seals, with radial sealing action (LR6..-2RSR)*
② *Double row, sealing shields (LR52..-2Z)*

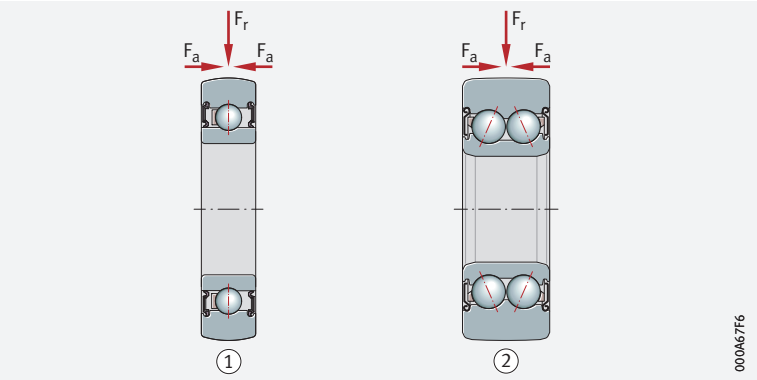

Stud type track rollers

✎ *Heavy-section roller stud, with or without eccentric collar*

Stud type track rollers have outer rings with a crowned outside surface, heavy-section roller studs and ball and cage assemblies with plastic cages ➤ *1418* | 🗀 *3* and ➤ *1418* | 🗀 *4*. The stud type track rollers are available with and without an eccentric collar.

For ease of mounting, the roller stud is produced in one of the following designs:

- with a threaded hole and mounting slot ➤ *1418* | 🗀 *3*
- with an external thread and hexagonal socket ➤ *1418* | 🗀 *4*
- with an external thread and flat areas on both sides ➤ *1418* | 🗀 *5*

Stud type track rollers ZL2 are single row, ZL52, ZLE52 and KR52 are double row.

✎ *Design without eccentric collar*

Stud type track rollers without an eccentric collar are suitable for applications where a defined requirement for adjustment of the outer ring outside surface in relation to the mating track on the adjacent construction is not present ➤ *1418* | 🗀 *3* and ➤ *1418* | 🗀 *4*.

3
Stud type track rollers, without eccentric collar, short roller stud with threaded hole, sealed on both sides

F_r = *radial load*
F_a = *axial load*

① *Single row, lip seal on stud side plus sealing shield and cover (ZL..-DRS)*
② *Double row, lip seal on stud side plus sealing shield and cover (ZL52..-DRS)*

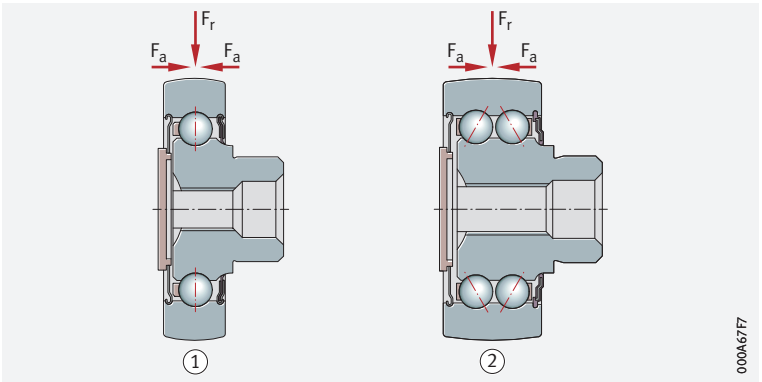

4
Stud type track roller, without eccentric collar, long roller stud with external thread, sealed on both sides

F_r = *radial load*
F_a = *axial load*

① *Double row, lip seals, with axial sealing action (KR52..-2RS)*

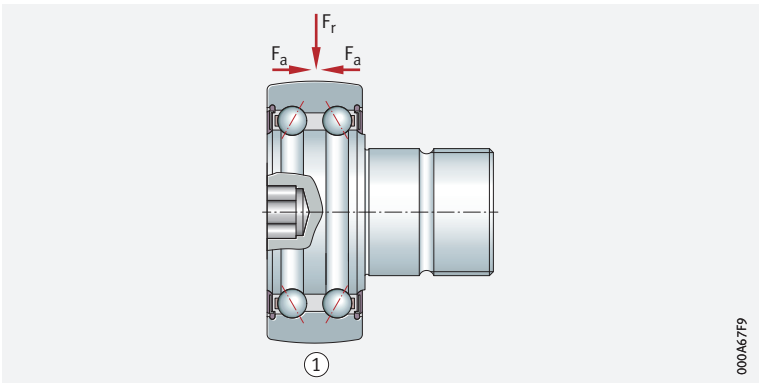

Design with eccentric collar

Stud type track rollers ZLE52 have an eccentric collar ➤*1418*| 5. The eccentric collar can be used to adjust the outside surface of the outer ring clearance-free against the mating track. This gives optimum geometrical locking between the track roller and mating track. Furthermore, larger manufacturing tolerances can be tolerated in the adjacent construction. The load distribution when several stud type track rollers are used is also more uniform. For countertensioning during fitting, this series has flat areas on both sides of the roller stud. Threaded connections must be provided on the two end faces for relubrication, dimensions ➤*1434*|.

5
Stud type track roller, with eccentric collar, long roller stud with external thread, sealed on both sides

F_r = *radial load*
F_a = *axial load*

① *Double row, sealing shields (ZLE52..-2Z)*

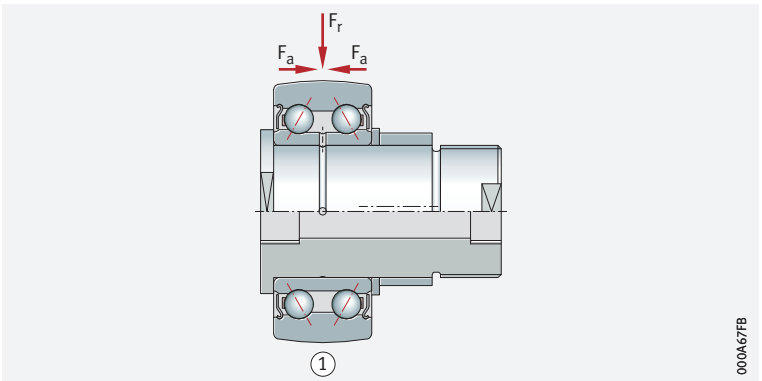

Track rollers with plastic outer tyre

Suitable for low loads and high demands on low-noise running

Track rollers KLRU and KLRZ comprise single row deep groove ball bearings with a shrink-fitted polyamide outer ring (PA) ➤*1419*| 6. Polyamide can tolerate higher specific contact pressures than elastomer and is relatively resistant to abrasion. These track rollers are mounted on shafts or studs and are used where low loads are present and the bearings are required to run particularly quietly.

Outside surface profile of the outer ring

Spherical or cylindrical outside surface

Track rollers KLRU have an outer ring with a crowned outside surface. The radius of curvature is indicated in the product table. Series KLRZ has a cylindrical outside surface.

Maximum radial load

The maximum radial load is determined by the permissible contact pressure; the values $F_{r\,per}$ in the product tables must not be exceeded.

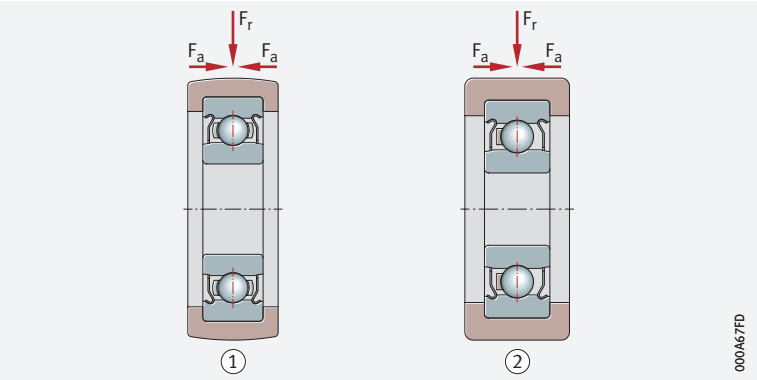

6 *Track rollers with plastic outer tyre, sealed on both sides*

F_r = *radial load*
F_a = *axial load*

① *Crowned outside surface, sealing shields (KLRU..-2Z)*
② *Cylindrical outside surface, sealing shields (KLRZ..-2Z)*

X-life premium quality

Track rollers LR52 and LR53, which have undergone comprehensive further development, are supplied in the X-life design. These track rollers are characterised by a longer rating life and operating life, due to higher basic dynamic load ratings compared with standard track rollers.

This higher performance results from the use of state of the art manufacturing techniques and improved internal constructions. They lead to better and more uniform surfaces and contact areas and thus optimised load distribution in the bearing.

Increased customer benefits due to X-life

This opens up expanded design possibilities:

- Under the same load and with an unchanged design envelope, X-life bearings have a longer rating life. Maintenance intervals can be extended
- Conversely, an X-life bearing in the same design envelope and with the same rating life can support higher loads
- Where the rating life and load remain unchanged, X-life bearings allow higher performance density, facilitating optimisation of the design envelope and reductions in mass

Lower operating costs, higher machine availability

In conclusion, these advantages improve the overall cost-efficiency of the bearing position significantly and thus bring about a sustainable increase in the efficiency of the machine and equipment.

Suffix XL

X-life track rollers include the suffix XL in the designation.

2.2 Load carrying capacity

Suitable for high radial loads

The track rollers can support high radial loads as well as axial loads arising from slight misalignment and skewed running.

Installation as track roller

If used as a track roller, the outer ring undergoes elastic deformation

In the case of track rollers, the outer ring is supported on the mating track at certain points and undergoes elastic deformation (oval deformation) ➤*1420* | 7. Compared to rolling bearings supported in a housing bore, track rollers therefore have:

- a modified load distribution in the bearing (load is supported by fewer rolling elements in the loaded zone). This is taken into consideration by the reduced effective basic load ratings $C_{r\,w}$ and $C_{0r\,w}$ used in the calculation of the rating life.
- bending stresses and reverse bending strengths in the outer ring. These are taken into consideration by the permissible effective radial loads $F_{r\,per}$ and $F_{0r\,per}$. The bending stresses and reverse bending strengths must not exceed the permissible strength values of the material

7
Installation as track roller: deformation of the outer ring when used against a flat mating track

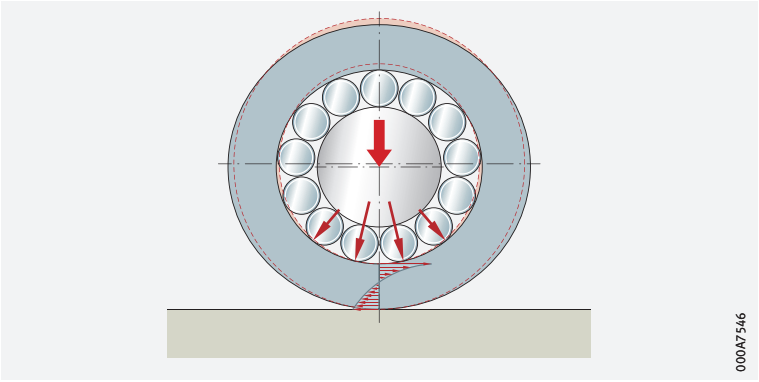

2.3 Compensation of angular misalignments

Not suitable for the compensation of angular misalignments

Track rollers are not suitable for the compensation of angular misalignments, but can tolerate small misalignments and slight skewed running; for limits see chapter Yoke type roller bearing track rollers, stud type roller bearing track rollers ➤*1366*

Skewed running

Skewed running leads to additional axial loading of the bearing and to elastic axial slippage in rolling contact between the outer ring and the mating track.

Tilted running

If tilting occurs during running, increased edge stresses occur, especially in track rollers with a cylindrical outside surface of the outer ring. Track rollers with a crowned outer ring are less sensitive to tilting and should therefore be used in preference if tilting is expected.

2.4 Lubrication

✎ *Greased using a grease to GA13*

The track rollers are greased using a lithium soap grease to GA13. In the case of stud type track rollers, series ZLE52 can be lubricated via the roller stud. Track rollers with a plastic outer tyre cannot be relubricated. Suitable greases for relubrication ➤*1379*| *1*.

✎ *LR52, LR53*

Double row track rollers are also greased using a lithium soap grease to GA13. Due to the improved internal construction, less friction occurs and less strain is placed on the lubricant. This leads to lower bearing temperatures.

Two contact zones

✎ *Lubricate the rolling elements and mating track*

Two contact zones must be lubricated and considered separately:

- the rolling elements and rolling element raceway
- the outside surface of the track roller and the mating track

Track rollers are also available as a special design with a lubrication hole in the inner ring. These bearings have the suffix IS1 ➤*1423*| *3*.

2.5 Sealing

Yoke type track rollers

✎ *Bearings with the suffix 2RSR*

Yoke type track rollers with the suffix 2RSR have lip seals with radial sealing action on both sides. In some sizes, RS seals with axial sealing action are fitted for reasons of space.

✎ *2HRS or 2Z seal*

Double row yoke type track rollers in X-life quality have a revised sealing concept with a significantly improved sealing action compared to the previous design ➤*1421*| *8*. Further information on HRS seals ➤*223*| *2*. As standard, the bearings (suffix 2HRS) have DEHP-free lip seals on both sides.

8
Lip seal 2HRS or sealing shield 2Z

① *Innovative geometry of lip seal 2HRS with axial contact between sealing ring and inner ring*
② *Sealing shield 2Z with labyrinth seal*

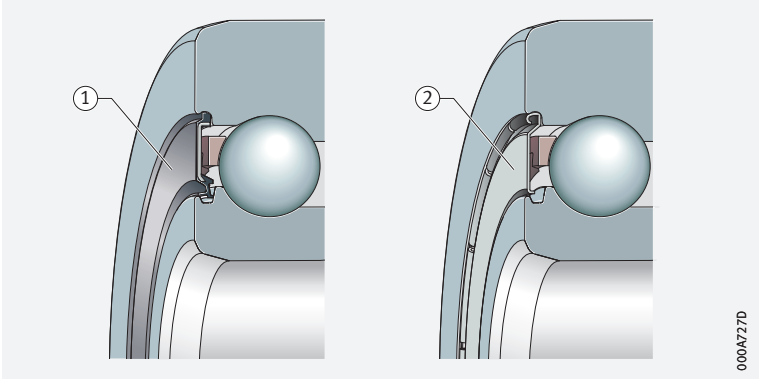

Stud type track rollers

✎ *Series ZL2 and ZL52*

Stud type track rollers ZL2 and ZL52 have lip seals on the stud side and the suffix DRS. The opposite side can be sealed using the plastic cover supplied.

✎ *Series ZLE52*

Stud type track rollers ZLE52 have sealing shields on both sides and the suffix 2Z.

Track rollers with plastic outer tyre

✎ *Sealing shields or lip seals*

These track rollers have sealing shields on both sides (suffix 2Z) or lip seals with radial sealing action (suffix 2RSR).

2.6 Speeds

✎ *Speeds $n_{D\,G}$*

The maximum permissible speed for track rollers is essentially determined by the permissible operating temperature of the track rollers. The speed thus depends on the type of bearing, the load, the lubrication conditions and the cooling conditions.

✎ *Speeds with lip seals*

The speed of track rollers with lip seals is additionally restricted by the permissible sliding speed at the seal lip.

✎ *Speeds during continuous operation*

The speeds $n_{D\,G}$ in the product tables are guide values and are valid for grease lubrication.

Additional information on the subject of speeds in the chapter Yoke type roller bearing track rollers, stud type roller bearing track rollers must be observed ➤*1382*|*1.6*.

2.7 Noise

Schaeffler Noise Index

The Schaeffler Noise Index (SGI) is not yet available for this bearing type ➤*69*. The data for these bearing series will be introduced and updated in stages.

Further information:

- ***medias*** *https://medias.schaeffler.com*

2.8 Temperature range

✎ *Limiting values*

The operating temperature of the track rollers is limited by:

- the dimensional stability of the bearing rings and rolling elements
- the cage
- the lubricant
- the seals
- the plastic outer tyre

Possible operating temperatures of the track rollers ➤*1422*|▦ *1*.

▦ ***1***
Permissible temperature ranges

Operating temperature	Yoke type track rollers	
	with plastic outer tyre KLRU and KLRZ	without plastic outer tyre
	–20 °C to +80 °C	–20 °C to +120 °C

In the event of anticipated temperatures which lie outside the stated values, please contact Schaeffler.

2.9 Cages

✎ *Solid cages made from polyamide PA66 are used as standard*

The cages used in the track rollers are plastic cages made from glass fibre reinforced polyamide PA66. These cages have a low mass as well as good sliding and emergency running characteristics. Track rollers in the X-life design have an optimised polyamide cage as standard.

2.10 Internal clearance

Radial internal clearance

✎ *The standard is CN*

Track rollers are manufactured as standard with radial internal clearance CN (normal) ➤*1423*|▦ *2*. CN is not stated in the designation.

The values for radial internal clearance correspond to DIN 620-4:2004 (ISO 5753-1:2009). These are valid for bearings which are free from load and measurement forces (without elastic deformation).

▦ **2**
Radial internal clearance for yoke and stud type track rollers

Nominal bore diameter d mm		Radial internal clearance									
		C2 (Group 2) µm		CN (Group N) µm		C3 (Group 3) µm		C4 (Group 4) µm		C5 (Group 5) µm	
over	incl.	min.	max.	min.	max.	min.	max.	min.	max.	min.	max.
2,5	10	0	7	2	13	8	23	14	29	20	37
10	18	0	9	3	18	11	25	18	33	25	45
18	24	0	10	5	20	13	28	20	36	28	48
24	30	1	11	5	20	13	28	23	41	30	53
30	40	1	11	6	20	15	33	28	46	40	64
40	50	1	11	6	23	18	36	30	51	45	73
50	65	1	15	8	28	23	43	38	61	55	90

2.11 Dimensions, tolerances

Tolerances

The tolerances for the dimensional and running accuracy of track rollers correspond to tolerance class Normal in accordance with ISO 492:2014. In a deviation from ISO 492, the diameter tolerance of the profiled outside surface is 0/–0,05 mm.



The dimensional tolerance for the cylindrical outside surface of the outer ring corresponds to the tolerance class Normal in accordance with ISO 492:2014.

✎ *Stud tolerances*

The stud diameter tolerances for stud type track rollers are:

- in tolerance class r6 for ZL2 and ZL52
- in tolerance class h7 for KR52
- in tolerance class h9 for ZLE52

2.12 Suffixes

Suffixes describe the design and features of a bearing in more detail.

▦ **3**
Suffixes and corresponding descriptions

Suffix	Description of suffix	
DRS	Lip seal on stud side, axial sealing action Sealing shield with cover on the end face	Standard
IS1	Lubrication hole in inner ring	Special design, available by agreement
RR	Protected against corrosion by Corrotect special coating	
TVH	Cage made from glass fibre reinforced polyamide	Standard
X	Cylindrical outside surface	
XL	X-life design	
2HRS	Lip seal on both sides with optimised geometry, low friction	
2RS	Lip seal on both sides, with axial sealing action	
2RSR	Lip seal on both sides, with radial sealing action	
2Z	Sealing shield on both sides	

2.13 Structure of bearing designation

With ***medias*** interchange, equivalent Schaeffler bearing designations can be determined for bearing designations from other rolling bearing manufacturers *https://www.schaeffler.de/std/1B69*.

Examples of composition of bearing designation

The designation of bearings follows a set model. Examples ➤ *1424* | *9* to ➤ *1424* | *11*.

9
Single row yoke type track roller, lip seal on both sides: designation structure

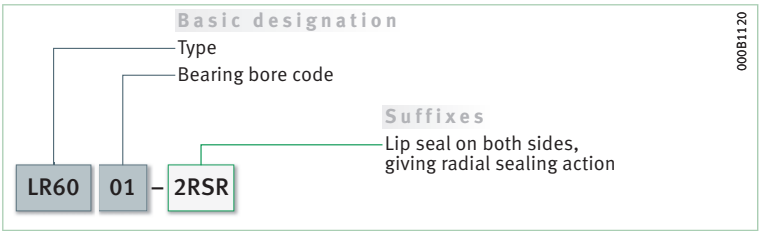

10
Double row yoke type track roller, 2HRS seal on both sides, cage made from glass fibre reinforced polyamide, X-life design: designation structure

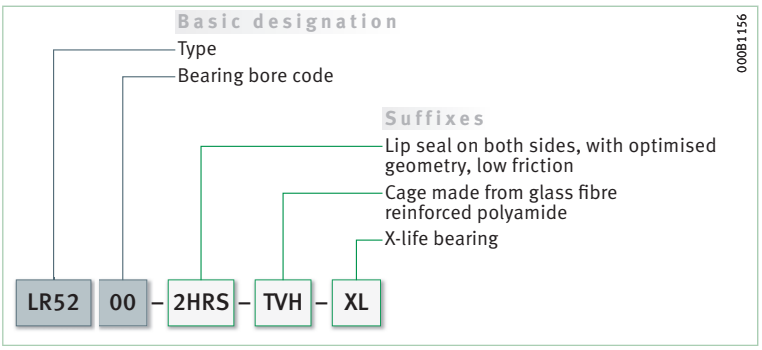

11
Double row stud type track roller with eccentric collar, sealing shield on both sides: designation structure



2.14 Dimensioning

Calculation of the rating life

The methods for calculating the rating life are:

- the basic rating life to DIN ISO 281
- the adjusted basic rating life to DIN ISO 281
- the expanded calculation of the adjusted reference rating life to DIN ISO 281-4

Use effective basic dynamic/ static load ratings

These methods are described in the chapter Load carrying capacity and life. For track rollers, the following values must be replaced:

- C_r, $C_{0r} = C_{r\,w}$, $C_{0r\,w}$
  Effective basic dynamic or static load rating
- $C_{ur} = C_{ur\,w}$
  Fatigue limit load as track roller

Further equations for calculating the rating life are given in the chapter Yoke type roller bearing track rollers, stud type roller bearing track rollers. The instructions and information provided there must be observed.

Static load safety factor

✎ $S_0 = C_{0r\,w}/F_{0r}$

In addition to the basic rating life L, it is also always necessary to check the static load safety factor S_0 ➤1425| ƒ 1.

ƒ 1
Static load safety factor

$$S_0 = \frac{C_{0r\,w}}{F_{0r}}$$

Legend

S_0	–	Static load safety factor
$C_{0r\,w}$	N	Effective radial basic static load rating in accordance with product table
F_{0r}	N	Maximum static radial load on track roller.

Track rollers are regarded as heavily loaded at a static load safety factor of $S_0 < 8$. Static load safety factors of $S_0 < 1$ cause plastic deformation of the rolling elements and the raceways, which can impair smooth running. This is only permissible for bearings with small rotary motions or in secondary applications.

If an application has a static load safety factor $S_0 < 2$, please consult Schaeffler.

2.15 Minimum load

✎ *Minimum load* $C_{0r\,w}/F_r < 60$

In order to ensure that the outer ring is driven, that no slippage occurs and that the track roller does not lift from the mating track, the track roller must be subjected to a minimum load in dynamic operation. In general, the minimum load is calculated using the ratio $C_{0r\,w}/F_r < 60$.

2.16 Design of bearing arrangements

Adjacent construction of yoke type track rollers



✎ *The value for dimension "d_2" must not be less than the value stated*

The abutment surfaces for the bearings must be flat and perpendicular. Due to the contact pressure occurring, they must not be less than the dimension d_2; see product tables for values ➤1428|▦.

✎ *Yoke type track rollers LR*

Yoke type track rollers LR can be axially clamped or located by means of conventional fasteners such as snap rings.

Shaft tolerances

✎ *Tolerance class h6* Ⓔ

In general, yoke type track rollers have point load on the inner ring. In order to ensure adequate support and to largely avoid fretting corrosion, the shaft tolerance should be in the tolerance class h6 Ⓔ.

Adjacent construction of stud type track rollers

✎ *The value for dimension "d_2" must not be less than the value stated*

The abutment surfaces for the track rollers must be flat and perpendicular. Due to the contact pressure occurring, they must not be less than the dimension d_2; see product tables for values ➤1432|▦.

✎ *Lead chamfer*

The lead chamfer on the locating bore must not be more than 0,5×45°.

Stud type track rollers ZL and KR must be axially clamped. The abutment surface for the nut must have sufficiently high strength and the tightening torque M_A for the fixing nut must be observed; see product table for values ➤1432|▦. The roller stud can only transmit the permissible radial load if the correct tightening torque is applied. If the tightening torque for the nut cannot be adhered to, an interference fit is required.

Locating bore tolerance

✎ *Tolerance class H7* Ⓔ

For series ZL2, ZL52, KR52 and ZLE52, Schaeffler recommends locating bores to tolerance class H7 Ⓔ.

2.17 Mounting and dismounting

The mounting and dismounting options for track rollers, by mechanical or hydraulic methods, must be taken into consideration in the design of the bearing position.

Schaeffler Mounting Handbook

Rolling bearings must be handled with great care

Rolling bearings are well-proven precision machine elements for the design of economical and reliable bearing arrangements, which offer high operational security. In order that these products can function correctly and achieve the envisaged operating life without detrimental effect, they must be handled with care.

The Schaeffler Mounting Handbook MH 1 gives comprehensive information about the correct storage, mounting, dismounting and maintenance of rotary rolling bearings *https://www.schaeffler.de/std/1D53*. It also provides information which should be observed by the designer, in relation to the mounting, dismounting and maintenance of bearings, in the original design of the bearing position. This book is available from Schaeffler on request.

Mounting guidelines for yoke type track rollers

Guidelines

If the tolerances are unfavourable, the yoke type track rollers should be pressed onto the shaft or stud using a mounting press ➤*1426*| *12*. The inner ring must be fitted such that the pressing-in force is distributed uniformly on the end face of the inner ring. The press-in force must not be directed through the rolling elements. Ensure that the seals are not damaged while mounting the yoke type track rollers. Yoke type track rollers must be secured axially after mounting.

12
Mounting of yoke type track roller using a mounting press

① *Mounting press*

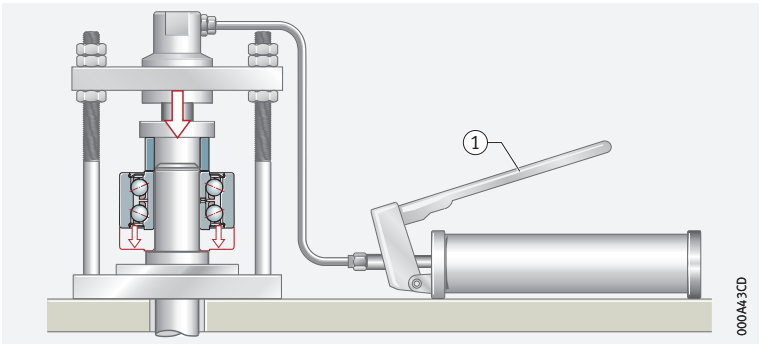

Stud type track rollers

Guidelines for mounting

Stud type track rollers are mounted and dismounted using the methods applied to yoke type track rollers ➤*1426*| *13*. The tightening torques M_A given in the product tables must be observed. It is only in this way that the permissible radial load can be ensured. Screws and nuts of grade 8.8 or better must be used.

13
Mounting of stud type track roller

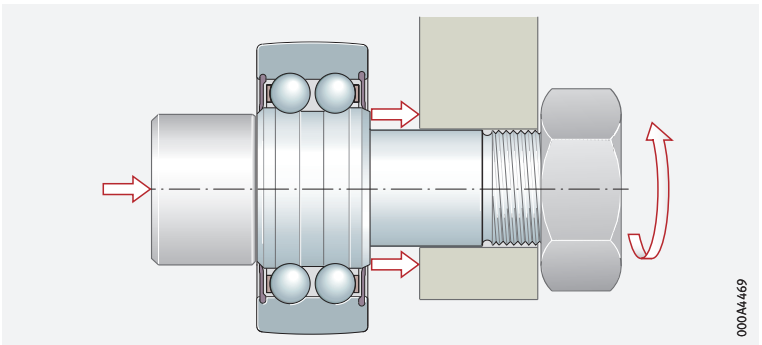

2.18 Legal notice regarding data freshness

The further development of products may also result in technical changes to catalogue products

Of central interest to Schaeffler is the further development and optimisation of its products and the satisfaction of its customers. In order that you, as the customer, can keep yourself optimally informed about the progress that is being made here and with regard to the current technical status of the products, we publish any product changes which differ from the printed version in our electronic product catalogue.

We therefore reserve the right to make changes to the data and illustrations in this catalogue. This catalogue reflects the status at the time of printing. More recent publications released by us (as printed or digital media) will automatically precede this catalogue if they involve the same subject. Therefore, please always use our electronic product catalogue to check whether more up-to-date information or modification notices exist for your desired product.

Link to electronic product catalogue

The following link will take you to the Schaeffler electronic product catalogue: *https://medias.schaeffler.com*.

2.19 Further information

For reliable and problem-free operation of track rollers, it is essential that attention is paid to the following information in the chapter Yoke type roller bearing track rollers, stud type roller bearing track rollers:

- installation as yoke or stud type track roller ➤*1377*
- permissible dynamic or static radial load ➤*1377*
- load carrying capacity and life ➤*1387*
- operating life ➤*1387*
- minimum load ➤*1389*
- angular misalignment and tilting ➤*1378*
- speeds ➤*1382*
- lubrication ➤*1379*



Yoke type ball bearing track rollers

Single row
Sealed

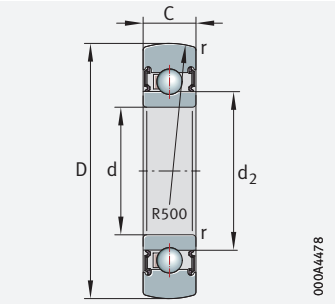

With seal 2RSR, 2RS

D = 13 – 90 mm

Main dimensions			Basic load ratings		Fatigue limit load	Speed	Mass	Designation	Dimensions	
D	d	C	dyn. $C_{r\,w}$	stat. $C_{0r\,w}$	$C_{ur\,w}$	$n_{D\,G}$	m	➤*1423|2.12* ➤*1424|2.13*	d_2	r
			N	N	N	min^{-1}	≈ g			min.
13	4	4	920	360	18,6	24 000	10	**LR604-2RSR**	6,1	0,2
16	5	5	1 290	510	26,5	23 000	10	**LR605-2RSR**	7,5	0,2
19	6	6	1 940	810	40,5	22 000	10	**LR606-2RSR**	8,7	0,3
22	7	6	2 250	890	43,5	20 000	10	**LR607-2RSR**	9	0,3
24	8	7	2 950	1 280	64	19 000	20	**LR608-2RSR**	10	0,3
28	10	8	5 000	2 550	130	16 000	20	**LR6000-2RSR**	14,6	0,3
30	12	8	5 300	2 800	148	15 000	30	**LR6001-2RSR**	16,6	0,3
32	10	9	5 100	2 380	120	13 000	50	**LR200-2RSR**	16,6	0,6
	10	9	5 100	2 380	120	13 000	50	**LR200-X-2RSR**	16,6	0,6
35	12	10	6 000	2 850	143	12 000	50	**LR201-2RSR**	18,3	0,6
	12	10	6 000	2 850	143	12 000	50	**LR201-X-2RSR**[1)]	18,3	0,6
40	15	11	7 000	3 450	175	11 000	70	**LR202-2RSR**	21	0,6
	15	11	7 000	3 450	175	11 000	70	**LR202-X-2RSR**[1)]	21	0,6
47	17	12	8 900	4 550	229	9 000	110	**LR203-2RSR**	24	0,6
	17	12	8 900	4 550	229	9 000	110	**LR203-X-2RSR**[1)]	24	0,6
52	20	14	11 300	5 900	300	8 000	150	**LR204-2RSR**	29	1
	20	14	11 300	5 900	300	8 000	150	**LR204-X-2RSR**[1)]	29	1
62	25	15	13 300	7 300	370	7 000	230	**LR205-2RSR**	33,5	1
	25	15	13 300	7 300	370	7 000	230	**LR205-X-2RSR**[1)]	33,5	1
72	30	16	17 600	9 900	510	5 500	330	**LR206-2RS**	37,4	1
	30	16	17 600	9 900	510	5 500	330	**LR206-X-2RS**[1)]	37,4	1
80	35	17	21 900	12 400	660	4 500	400	**LR207-2RS**	42,4	1,1
	35	17	21 900	12 400	660	4 500	400	**LR207-X-2RS**[1)]	42,4	1,1
90	45	19	23 700	14 100	750	3 600	500	**LR209-2RS**	53,2	1,1
	45	19	23 700	14 100	750	3 600	500	**LR209-X-2RS**[1)]	53,2	1,1

medias *https://www.schaeffler.de/std/1F9A*

[1)] Track roller with cylindrical outside surface.

Yoke type ball bearing track rollers

Double row
Sealed

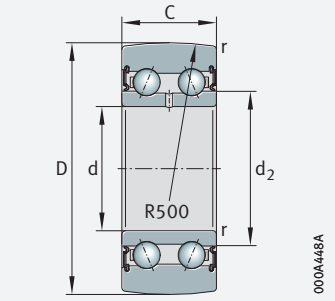

With seal 2RSR, 2RS

D = 17 – 68 mm

Main dimensions			Basic load ratings			Fatigue limit load	Speed	Mass	Designation	Dimensions	
D	d	C	dyn. $C_{r\,w}$ N	stat. $C_{0r\,w}$ N	$F_{r\,per}$ N	$C_{ur\,w}$ N	$n_{D\,G}$ min^{-1}	m ≈ g	➤*1423|2.12* ➤*1424|2.13*	d_2	r min.
17	5	7	1 690	950	950	50	12 000	10	**LR50/5-2RSR**	8,2	0,2
19	6	9	2 700	1 410	1 410	68	11 000	20	**LR50/6-2RSR**	9,3	0,3
22	7	10	3 300	1 700	1 700	83	10 000	20	**LR50/7-2RSR**	10,5	0,3
24	8	11	4 300	2 460	2 460	122	10 000	30	**LR50/8-2RSR**	10,5	0,3
28	10	12	4 750	2 950	2 950	149	9 000	30	**LR5000-2RS**	13,5	0,3
30	12	12	5 100	3 200	3 200	166	8 500	30	**LR5001-2RS**	15,5	0,3
35	15	13	6 500	4 250	4 250	222	7 000	50	**LR5002-2RS**	20,4	0,3
40	17	14	7 800	5 400	5 400	275	6 000	70	**LR5003-2RS**	21,6	0,3
47	20	16	11 700	7 900	7 900	415	5 500	120	**LR5004-2RS**	25,2	0,6
52	25	16	11 800	8 400	8 400	450	4 700	150	**LR5005-2RS**	29,8	0,6
62	30	19	16 000	12 200	12 200	650	4 000	250	**LR5006-2RS**	35,5	1
68	35	20	17 800	13 700	13 700	740	4 300	300	**LR5007-2RS**	41,7	1



medias *https://www.schaeffler.de/std/1F9A*

Yoke type ball bearing track rollers

Double row
Sealed
Without relubrication hole[1)]

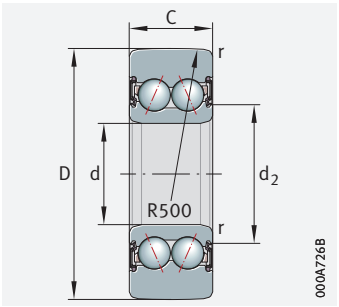

With seal 2HRS

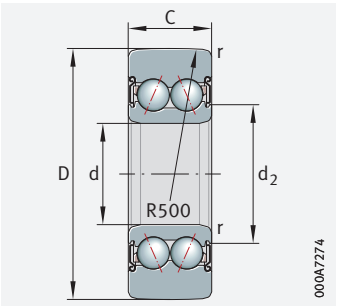

With seal 2Z

D = 32 – 100 mm

Main dimensions			Basic load ratings		Outer ring limit load	Fatigue limit load	Speed	Mass	Designation	Dimensions	
D	d	C	dyn. $C_{r\,w}$	stat. $C_{0r\,w}$	$F_{r\,per}$	$C_{ur\,w}$	$n_{D\,G}$	m	➤*1423*|*2.12* ➤*1424*|*2.13* X-life ➤*1419*	d_2	r
			N	N	N	N	min^{-1}	≈ g			min.
32	10	14	7 200	4 900	4 900	250	9 200	70	**LR5200-2HRS-TVH-XL**	17	0,6
	10	14	7 200	4 900	4 900	250	9 200	70	**LR5200-2Z-TVH-XL**	17	0,6
	10	14	7 200	4 900	4 900	250	9 200	70	**LR5200-X-2Z-TVH-XL**[2)]	17	0,6
35	12	15,9	8 800	6 100	4 800	315	8 100	80	**LR5201-2HRS-TVH-XL**	19,1	0,6
	12	15,9	8 800	6 100	4 800	315	8 100	80	**LR5201-2Z-TVH-XL**	19,1	0,6
	12	15,9	8 800	6 100	4 800	315	8 100	80	**LR5201-X-2Z-TVH-XL**[2)]	19,1	0,6
40	15	15,9	10 800	7 700	7 700	390	7 400	110	**LR5202-2HRS-TVH-XL**	21	0,6
	15	15,9	10 800	7 700	7 700	390	10 200	110	**LR5202-2Z-TVH-XL**	21	0,6
	15	15,9	10 800	7 700	7 700	390	10 200	110	**LR5202-X-2Z-TVH-XL**[2)]	21	0,6
47	17	17,5	13 700	10 100	10 100	510	6 300	170	**LR5203-2HRS-TVH-XL**	24,4	0,6
	17	17,5	13 700	10 100	10 100	510	8 900	170	**LR5203-2Z-TVH-XL**	24,4	0,6
	17	17,5	13 700	10 100	10 100	510	8 900	170	**LR5203-X-2Z-TVH-XL**[2)]	24,4	0,6
52	20	20,6	16 900	12 700	10 200	660	5 300	230	**LR5204-2HRS-TVH-XL**	29,2	1
	20	20,6	16 900	12 700	10 200	660	7 300	230	**LR5204-2Z-TVH-XL**	29,2	1
	20	20,6	16 900	12 700	10 200	660	7 300	230	**LR5204-X-2Z-TVH-XL**[2)]	29,2	1
	17	22,2	19 100	13 700	11 400	690	5 700	210	**LR5303-2HRS-TVH-XL**	27,1	1
62	25	20,6	19 700	15 900	15 900	820	4 500	340	**LR5205-2HRS-TVH-XL**	34,2	1
	25	20,6	19 700	15 900	15 900	820	6 500	340	**LR5205-2Z-TVH-XL**	34,2	1
	25	20,6	19 700	15 900	15 900	820	6 500	340	**LR5205-X-2Z-TVH-XL**[2)]	34,2	1
	20	22,2	22 200	17 200	17 200	860	4 850	340	**LR5304-2HRS-TVH-XL**	31,9	1,1
	20	22,2	22 200	17 200	17 200	860	6 700	340	**LR5304-2Z-TVH-XL**	31,9	1,1

medias *https://www.schaeffler.de/std/1F9A*

1) With relubrication hole by agreement.

2) Track roller with cylindrical outside surface.

Main dimensions			Basic load ratings		Outer ring limit load	Fatigue limit load	Speed	Mass	Designation	Dimensions	
D	d	C	dyn. $C_{r\,w}$	stat. $C_{0r\,w}$	$F_{r\,per}$	$C_{ur\,w}$	$n_{D\,G}$	m	➤ *1423* | *2.12* ➤ *1424* | *2.13* X-life ➤ *1419*	d_2	r
			N	N	N	N	min^{-1}	≈ g			min.
72	30	23,8	26 500	22 000	22 000	1 140	3 800	510	**LR5206-2HRS-TVH-XL**	40,3	1
	30	23,8	26 500	22 000	22 000	1 140	5 500	510	**LR5206-2Z-TVH-XL**	40,3	1
	30	23,8	26 500	22 000	22 000	1 140	5 500	510	**LR5206-X-2Z-TVH-XL**[2]	40,3	1
	25	25,4	28 000	22 500	22 500	1 140	4 100	500	**LR5305-2HRS-TVH-XL**	37,6	1,1
	25	25,4	28 000	22 500	22 500	1 140	5 700	500	**LR5305-2Z-TVH-XL**	37,6	1,1
80	35	27	33 000	27 500	22 200	1 450	3 100	660	**LR5207-2HRS-TVH-XL**	47	1,1
	35	27	33 000	27 500	22 200	1 450	4 650	660	**LR5207-2Z-TVH-XL**	47	1,1
	35	27	33 000	27 500	22 200	1 450	4 650	660	**LR5207-X-2Z-TVH-XL**[2]	47	1,1
	30	30,2	36 000	29 500	27 000	1 520	3 450	670	**LR5306-2HRS-TVH-XL**	44,4	1,1
	30	30,2	36 000	29 500	27 000	1 520	4 750	670	**LR5306-2Z-TVH-XL**	44,4	1,1
85	40	30,2	36 500	31 000	16 300	1 640	2 900	750	**LR5208-2HRS-TVH-XL**	52,8	1,1
	40	30,2	36 500	31 000	16 300	1 640	4 100	750	**LR5208-2Z-TVH-XL**	52,8	1,1
	40	30,2	36 500	31 000	16 300	1 640	4 100	750	**LR5208-X-2Z-TVH-XL**[2]	52,8	1,1
90	35	34,9	45 500	37 000	27 000	1 870	3 100	970	**LR5307-2HRS-TVH-XL**	49,6	1,5
	35	34,9	45 500	37 000	27 000	1 870	4 100	970	**LR5307-2Z-TVH-XL**	49,6	1,5
100	40	36,5	53 000	46 000	35 500	2 380	2 700	1 200	**LR5308-2HRS-TVH-XL**	56,8	1,5
	40	36,5	53 000	46 000	35 500	2 380	3 650	1 200	**LR5308-2Z-TVH-XL**	56,8	1,5



medias *https://www.schaeffler.de/std/1F9A*

[1] Available with relubrication hole by agreement.

[2] Track roller with cylindrical outside surface.

Stud type ball bearing track rollers

Sealed

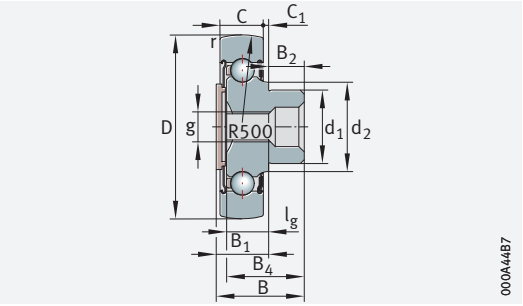

ZL2..-DRS

D = 35 – 80 mm

Main dimensions			Basic load ratings		Fatigue limit load	Speed	Mass	Designation
D	d_1	B	dyn. C_{rw}	stat. C_{0rw}	C_{urw}	n_{DG}	m	➤*1423|2.12* ➤*1424|2.13*
			N	N	N	min^{-1}	≈g	
35	14	33,2	8 700	5 400	270	7 500	90	**ZL5201-DRS**
	12	49,2	8 700	5 400	270	7 500	120	**KR5201-2RS**
40	16	23,8	7 000	3 450	175	8 500	80	**ZL202-DRS**
	16	36,2	9 900	6 500	325	7 000	120	**ZL5202-DRS**
	16	53,2	9 900	6 500	325	7 000	190	**KR5202-2RS**
47	18	26,5	8 900	4 550	229	6 500	120	**ZL203-DRS**
	18	39,5	12 800	8 600	430	5 500	190	**ZL5203-DRS**
	18	58,8	12 800	8 600	430	5 500	290	**KR5203-2RS**
52	20	30,7	11 300	5 900	300	6 000	170	**ZL204-DRS**
	20	45,3	16 100	11 000	560	5 000	250	**ZL5204-DRS**
	20	63,6	16 100	11 000	560	5 000	380	**KR5204-2RS**
62	25	33,8	13 300	7 300	370	5 500	250	**ZL205-DRS**
	25	50,4	18 800	13 600	690	4 500	380	**ZL5205-DRS**
	24	70,9	18 800	13 600	690	4 500	580	**KR5205-2RS**
72	30	59	25 000	18 500	960	3 500	550	**ZL5206-DRS**
	24	74,1	25 000	18 500	960	3 500	800	**KR5206-2RS**
80	35	69,2	31 000	23 400	1 230	2 800	710	**ZL5207-DRS**
	30	91	31 000	23 400	1 230	2 800	1 200	**KR5207-2RS**

medias *https://www.schaeffler.de/std/1F9A*

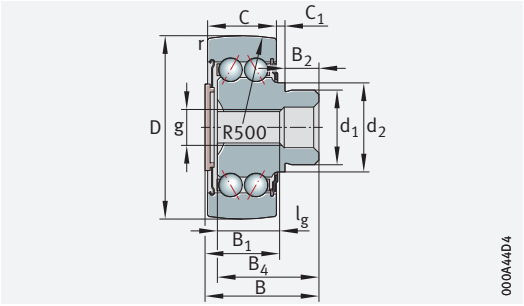

ZL52..-DRS

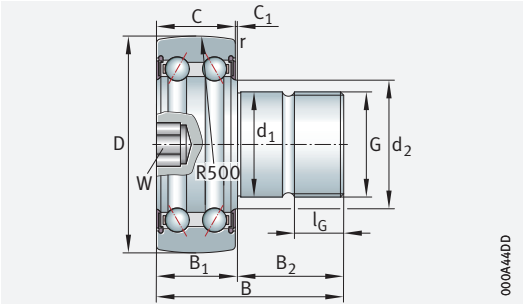

KR52..-2RS

Dimensions													Tightening torque
D	B_1 max.	B_2	B_4	C	C_1	d_2	r min.	G	l_G	g	l_g	W	M_A Nm
35	19,5	14	31	15,9	2,6	17,1	0,6	–	–	M8	14	–	–
	17	32,5	0	15,9	0,8	17,1	0,6	M12×1,5	17	–	–	6	45
40	14	10	21,5	11	2	20	0,6	–	–	M8	15	–	–
	20,5	16	34	15,9	3,5	20	0,6	–	–	M8	15	–	–
	17	36,5	0	15,9	0,8	20	0,6	M16×1,5	19	–	–	8	70
47	14,5	12	24,5	12	2	22,9	0,6	–	–	M8	16	–	–
	21,5	18	37,5	17,5	3,5	22,9	0,6	–	–	M8	15	–	–
	18,5	40,5	0	17,5	0,8	22,9	0,6	M18×1,5	21	–	–	8	115
52	17	14	28,5	14	2	26,8	1	–	–	M10	18	–	–
	25,5	20	43	20,6	4	26,8	1	–	–	M10	18	–	–
	22,5	41,5	0	20,6	1,5	26,8	1	M20×1,5	21	–	–	10	160
62	18	16	31	15	2	30,3	1	–	–	M10	19	–	–
	25,5	25	47,5	20,6	4	30,3	1	–	–	M10	18	–	–
	21,5	49,5	0	20,6	0,8	30,3	1	M24×1,5	25	–	–	10	290
72	29	30	56,5	23,8	4,5	37,3	1	–	–	M16	20	–	–
	25	49,5	0	23,8	0,8	37,3	1	M24×1,5	25	–	–	10	290
80	33,5	36	66,5	27	5,5	42,4	1,1	–	–	M16	20	–	–
	28	63	0	27	1	42,4	1,1	M30×1,5	32	–	–	12	600



Stud type ball bearing track rollers

With eccentric collar
Sealed

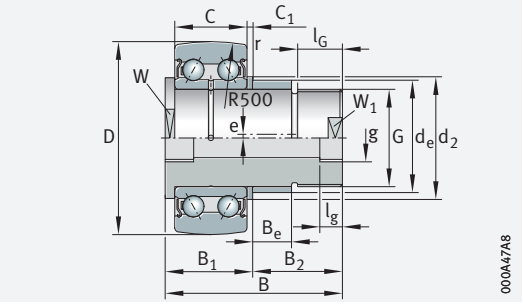

ZLE52..-2Z

D = 35 – 80 mm

Main dimensions			Basic load ratings		Fatigue limit load	Speed	Mass	Designation
D	d_e	B	dyn. C_{rw} N	stat. C_{0rw} N	C_{urw} N	n_{DG} min^{-1}	m ≈g	➤*1423|2.12* ➤*1424|2.13*
35	18	65,5	8 800	6 100	315	11 100	250	**ZLE5201-2Z**
40	22	66,5	10 800	7 700	390	10 200	350	**ZLE5202-2Z**
52	24	76	16 900	12 700	660	7 300	460	**ZLE5204-2Z**
62	24	88	19 700	15 900	820	6 500	640	**ZLE5205-2Z**
80	35	99	33 000	27 500	1 450	4 650	1 300	**ZLE5207-2Z**

Dimensions															Tightening torque	Designation
D	B_1 max.	B_2	C	C_1	d_2	r min.	W	W_1	e	B_e	g	l_g	G	l_G min.	M_A Nm	➤*1423|2.12* ➤*1424|2.13*
35	20,5	45	15,9	2	25	0,6	15	9	1	18	M6	6	M12×1,5	24	30	**ZLE5201-2Z**
40	21,5	45	15,9	2,5	27	0,6	17	10	1	16	M8×1	8	M14	25	40	**ZLE5202-2Z**
52	26	50	20,6	2,5	30	1	22	17	1	18	M8×1	8	M20×1,5	29	150	**ZLE5204-2Z**
62	32	56	20,6	8	30	1	22	17	1	25	M8×1	8	M20×1,5	28	150	**ZLE5205-2Z**
80	35	64	27	3	45	1,1	40	27	1,5	29	M8×1	8	M30×1,5	32	540	**ZLE5207-2Z**

medias *https://www.schaeffler.de/std/1F9A*

Track rollers

With plastic outer tyre
Sealed

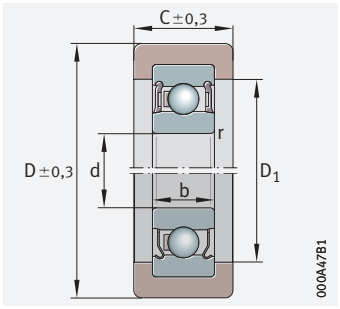

KLRZ..-2RSR (top)
KLRZ..-2Z (bottom)

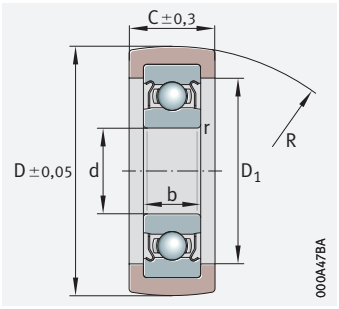

KLRU..-2Z

D = 27,5 – 46,8 mm

Main dimensions				Basic load ratings of track roller[1]	Deep groove ball bearing fitted	Basic load ratings of deep groove ball bearing		Mass	Designation	Dimensions			
D		d	C +0,3 −0,3	$F_{r\,per}$ N		dyn. C_r N	stat. C_{0r} N	m ≈ g	➤*1423|2.12* ➤*1424|2.13*	b	D_1	R	r min.
27,5	+0,05 −0,05	8	11	250	608-2Z	3 500	1 370	16	**KLRU08×28×11-2Z**	7	20	500	0,3
30	+0,3 −0,3	10	10	250	6000-2Z	4 850	1 970	50	**KLRZ10×30×10-2Z**	8	24	–	0,3
34,8	+0,05 −0,05	12	12	340	6001-2Z	5 400	2 370	30	**KLRU12×35×12-2Z**	8	26	300	0,3
41	+0,3 −0,3	12	16	500	6201-2RSR	7 300	3 100	50	**KLRZ12×41×16-2RSR**	10	29,5	–	0,6
46,8	+0,05 −0,05	12	20	500	6201-2Z	7 300	3 100	45	**KLRU12×47×20-2Z**	10	28,5	300	0,6
46,8	+0,05 −0,05	15	20	500	6202-2Z	8 200	3 750	50	**KLRU15×47×20-2Z**	11	31,5	300	0,6



medias *https://www.schaeffler.de/std/1F9A*

[1] Valid for installation as track roller. The values apply for operating temperatures up to max. +40 °C.

Radial insert ball bearings



Matrix for bearing preselection 1438

1 Radial insert ball bearings 1440

1.1 Bearing design 1440
1.2 Load carrying capacity 1458
1.3 Compensation of angular misalignments 1459
1.4 Lubrication 1461
1.5 Sealing 1462
1.6 Speeds 1464
1.7 Noise 1465
1.8 Temperature range 1466
1.9 Cages 1466
1.10 Internal clearance 1468

1.11 Dimensions, tolerances 1471
1.12 Suffixes 1473
1.13 Structure of bearing designation 1474
1.14 Dimensioning 1476
1.15 Minimum load 1479
1.16 Design of bearing arrangements 1479
1.17 Mounting and dismounting 1492
1.18 Legal notice regarding data freshness 1493
1.19 Further information 1494

Product tables 1496
Radial insert ball bearings with eccentric locking collar 1496
Radial insert ball bearings with grub screws in inner ring 1508
Inch size radial insert ball bearings 1512
Radial insert ball bearings with adapter sleeve 1520
Radial insert ball bearings with drive slot 1522

Product tables 1524
Self-aligning deep groove ball bearings, bore for fit 1524
Self-aligning deep groove ball bearings, square bore 1528
Self-aligning deep groove ball bearings, hexagonal bore 1530
Radial insert ball bearings with rubber interliner 1534
Radial insert ball bearings with steel aligning ring 1536
Corrosion-resistant radial insert ball bearings, VA design 1538
Corrosion-resistant radial insert ball bearings, with Corrotect coating 1544
Black Series, radial insert ball bearings in accordance with JIS 1546

Matrix for bearing preselection

The matrix gives an overview of the types and design features.

It can be used to make a preliminary assessment of whether a bearing is fundamentally suitable for the envisaged application.

The additional information provided in the product chapter (see column "detailed information") and in the Technical principles must, however, be observed in addition to this overview in selection of the bearing.

Design features and suitability			Radial insert ball bearings (ISO range)			
+++ extremely suitable ++ highly suitable + suitable (+) suitable with restrictions – not suitable/not applicable ✓ available			with eccentric locking collar	with grub screws	with adapter sleeve	detailed information ➤ 1440
Load carrying capacity	radial		+++	+++	+++	➤ 1458|1.2
	axial, one direction		+	+	+	➤ 1458|1.2
	axial, both directions		+	+	+	➤ 1458|1.2
	bending and torsional moments		++	++	++	➤ 1458|1.2
Compensation of angular misalignments	static		+++	+++	+++	➤ 1459|1.3
	dynamic		–	–	–	➤ 1459|1.3
Bearing design	cylindrical bore		✓	✓	✓	➤ 1440|1.1
	tapered bore		–	–	–	
	separable		–	–	–	
Lubrication	greased		✓	✓	✓	➤ 1461|1.4
Sealing	open		–	–	–	
	non-contact		✓	✓	–	➤ 1462|1.5
	contact		✓	✓	✓	➤ 1462|1.5
Operating temperature in °C[1)2)3)]	from to		–20 +100	–20 +100	–20 +100	➤ 1466|1.8
Suitability for	high speeds		++	++	+++	➤ 1464|1.6
	high running accuracy		(+)	(+)	++	➤ 1471|1.11 ➤ 115
	low-noise running		+	+	++	➤ 1465|1.7 ➤ 1440|1.1
	high rigidity		+	+	+	➤ 54
	reduced friction		(+)	(+)	(+)	➤ 56
	length compensation within bearing		–	–	–	
	non-locating bearing arrangement		–	–	–	
	locating bearing arrangement		++	++	++	
X-life bearings		X-life	✓	✓	✓	➤ 1441
Bearing bore d in mm	from to		12 120	12 90	20 50	➤ 1496
Product tables	from page ➤		1496	1508	1520	

1) Temporary temperature peaks are possible up to +120 °C (not in the case of bearings with rubber interliner)

2) High and low temperature designs available from –40 °C to +180 °C

3) High temperature design available from +150 °C to +250 °C

	Radial insert ball bearings (ISO range)						Black Series (JIS range)			
	with drive slot	with fit	with square bore	with hexagonal bore	with rubber interliner	with steel aligning ring	with grub screws	with adapter sleeve	detailed information ➤ **1440**	
	+++	+++	+++	+++	+++	+++	+++	+++	➤ *1458 | 1.2*	F_r
	+	+	–	–	+	+	+	+	➤ *1458 | 1.2*	F_a
	+	+	–	–	+	+	+	+	➤ *1458 | 1.2*	F_a
	++	+	+++	+++	++	++	++	++	➤ *1458 | 1.2*	M
	+++	+++	+++	+++	+++	+++	+++	+++	➤ *1459 | 1.3*	
	–	–	–	–	–	–	–	–	➤ *1459 | 1.3*	
	✓	✓	–	–	✓	✓	✓	✓	➤ *1440 | 1.1*	
	–	–	–	–	–	–	–	–		
	–	–	–	–	–	–	–	–		
	✓	✓	✓	✓	✓	✓	✓	✓	➤ *1461 | 1.4*	
	–	–	–	–	–	–	–	–		
	✓	–	–	–	–	–	–	–	➤ *1462 | 1.5*	
	✓	✓	✓	✓	✓	✓	✓	✓	➤ *1462 | 1.5*	
	–20 +100	–20 +100	–20 +100	–20 +100	–20 +85	–20 +100	–20 +100	–20 +100	➤ *1466 | 1.8*	
	(+)	+++	–	–	+	++	++	+++	➤ *1464 | 1.6*	n
	(+)	+++	–	–	(+)	(+)	(+)	++	➤ *1471 | 1.11* ➤ *115*	
	+	+	–	–	+++	+	+	++	➤ *1465 | 1.7* ➤ *1440 | 1.1*	
	+	+	+	+	(+)	+	+	+	➤ *54*	
	(+)	(+)	(+)	(+)	(+)	(+)	(+)	(+)	➤ *56*	
	–	–	–	–	–	–	–	–		
	+++	–	+++	+++	–	–	–	–	➤ *141*	
	–	++	–	–	++	++	++	++	➤ *141*	
	✓	✓	–	–	✓	✓	–	–	➤ *1441*	X-life
	20 70	12 60	16,3 39,7	16,1 38,1	12 50	20 40	12 90	12 80	➤ *1496*	
	1522	**1524**	**1528**	**1530**	**1534**	**1536**	**1546**	**1552**		

1 Radial insert ball bearings

Radial insert ball bearings are ready-to-fit machine elements. In combination with drawn shafts, they are particularly easy to fit and suitable for the design of economical bearing arrangements. They are highly suitable where predominantly radial loads must be supported.

Radial insert ball bearings with an extended inner ring undergo less tilting and therefore run more smoothly.

Radial insert ball bearings with a spherical outer ring are highly suitable where:

- static angular misalignments of the shaft must be compensated, which are caused by mounting inaccuracies and tolerances in the adjacent construction ➤ *1459 | 1.3*
- very good seals are required in environmental conditions such as dust, contamination, moisture, stone impacts and shocks ➤ *1462 | 1.5*

Radial insert ball bearings with a cylindrical outer ring are highly suitable where:

- a cylindrical housing bore is already present
- the outer ring of the bearings is to be located by means of easy-to-fit snap rings

Radial insert ball bearings with a profiled bore are highly suitable where:

- shafts must transmit very high torques

Radial insert ball bearings with a rubber interliner are highly suitable where:

- vibrations and shocks must be supported
- damping of running noise is required

1
Compensation of static angular misalignments, available seals with sealing action of different magnitudes

η = *sealing action*

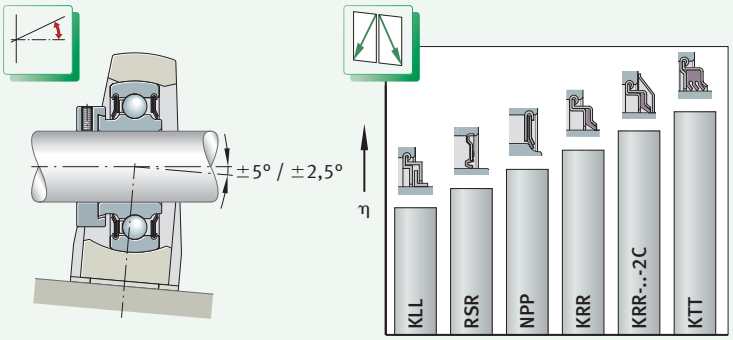

1.1 Bearing design

✎ *Design variants*

The radial insert ball bearings have a spherical or cylindrical outside surface. They are predominantly located on the shaft by means of an eccentric locking collar or grub screws.

The bearings are sealed using a range of available standard seals that are matched to the different application conditions.

Radial insert ball bearings are available in the following designs:

- standard bearings in accordance with ISO ➤*1441*
- corrosion-resistant bearings in a VA design or with a Corrotect coating in accordance with ISO ➤*1449*
- Black Series with Durotect BS coating in accordance with JIS B 1558 ➤*1452*

Radial insert ball bearings are also available in many other designs and sizes, as well as for specific applications, by agreement.

X-life

Numerous sizes are supplied in X-life premium quality. These products are indicated in the product tables.

Radial insert ball bearings of X-life premium quality have, for example, a lower roughness Ra and higher geometrical accuracy of the raceways than comparable designs that are not X-life. As a result, these bearings have higher load carrying capacity and longer rating life although their dimensions are identical. In certain applications, this means that it may be possible to design a smaller bearing arrangement.

Radial insert ball bearings of X-life premium quality have an eccentric locking collar of an improved design and the quantity and distribution of the lubricant has been optimised. Housings ASE have additional cross-pieces on the underside. For extreme requirements, the cage and seal material in the high and low temperature designs (suffix FA101) has been significantly improved in comparison with earlier versions.

Metric and inch size designs

Radial insert ball bearings are available in metric sizes. Some series have a bore diameter with inch dimensions.

Standard bearings in accordance with ISO

The radial insert ball bearings are based on the deep groove ball bearing series 60, 62 and 63. The numerals identify the ball set and therefore the load carrying capacity of the bearing ➤*1458*|*1.2*. The inner ring is extended on one or both sides, while the bore has a plus tolerance in most of the designs.

Radial insert ball bearings are particularly easy to fit and are preferentially suitable for drawn shafts of tolerance classes h6 Ⓔ to h9 Ⓔ.
For non-locating bearings, shafts of tolerance classes h5 Ⓔ to h7 Ⓔ are recommended.

Spherical outside surface for the compensation of misalignments

Radial insert ball bearings with a spherical outside surface are single row, ready-to-fit units comprising a solid outer ring, cages made from plastic or sheet steel and seals P, R, L or T ➤*1462*|▦*6*. Bearings with an inner ring extended on both sides undergo less tilting of the inner ring and therefore run more smoothly.

In combination with a housing matched to the design, bearings with a spherical outside surface can compensate for misalignment of the shaft ➤*1459*|*1.3*.

With only a few exceptions, radial insert ball bearings can be relubricated. For this purpose, they have two lubrication holes in one plane of the outer ring offset by 180°.

Location on the shaft is by means of an eccentric locking collar, grub screws in the inner ring, an adapter sleeve, a drive slot, fit or profiled bore ➤*1442*|⧉*2*.

Cylindrical outside surface for a cylindrical housing bore

Radial insert ball bearings with a cylindrical outside surface are single row, ready-to-fit units comprising a solid outer ring, an inner ring extended on one or both sides, cages made from plastic and seals P or R ➤*1462*|▦*6*. Bearings with an inner ring extended on both sides undergo less tilting
of the inner ring and therefore run more smoothly.

The radial insert ball bearings are greased and cannot be relubricated.

Their location on the shaft is by means of an eccentric locking collar, fit or profiled bore ➤*1443* and ➤*1446*.

Location and design

Locating bearings

Location is by means of eccentric locking collars, grub screws or integrated adapter sleeves ➤*1442*|*2* and ➤*1442*|*3*. Certain series can be located by means of a fit on the shaft. The extended inner ring on one or both sides is used as a running surface for the seal and prevents significant tilting of the inner ring.

Bearings with vibration damping

For applications where strong vibrations can occur, damping can be achieved using radial insert ball bearings with a thick-walled rubber interliner ➤*1442*|*3*.

Non-locating bearings

Radial insert ball bearings with a drive slot in the inner ring are non-locating bearings that are used for low speeds and loads in order to compensate for elongations of the shaft ➤*1442*|*3*. The slot allows simple radial location of the bearing on the shaft.

2
Location methods for radial insert ball bearings

① *Location using eccentric locking collar, bearing with relubrication facility*
② *Location using integrated adapter sleeve, bearing with relubrication facility*
③ *Location using grub screws in inner ring, bearing with relubrication facility*

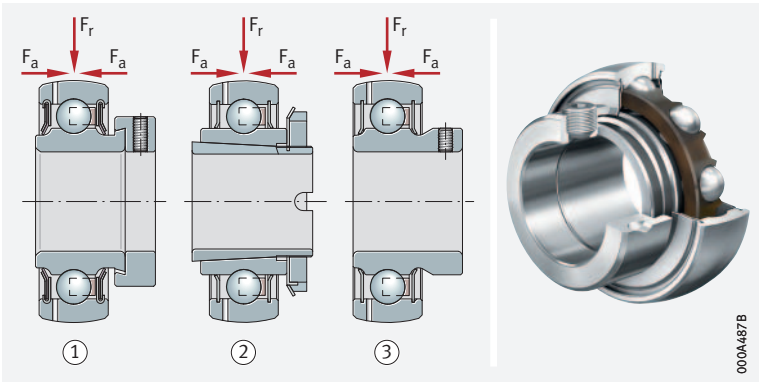

3
Design examples of radial insert ball bearings

① *Radial insert ball bearing with rubber interliner*
② *Radial insert ball bearing with drive slot (non-locating bearing), with relubrication facility*
③ *Radial insert ball bearing with aligning ring (for cylindrical housing bore)*

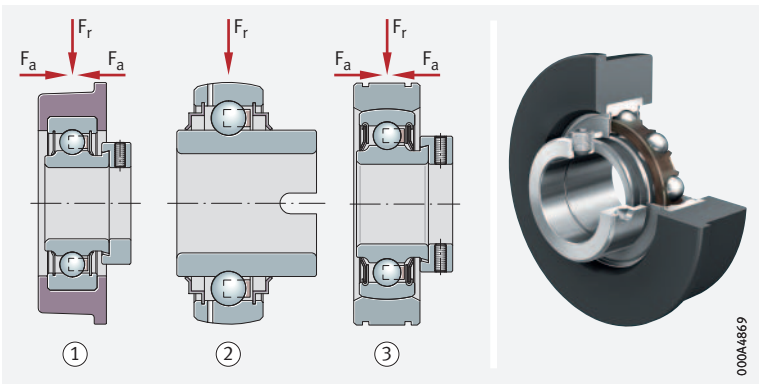

Radial insert ball bearings with eccentric locking collar

These "classic" INA radial insert ball bearings are located on the shaft by means of a locking collar ➤*1443*|*4*. They are particularly suitable for bearing arrangements with a constant direction of rotation or, under low speed and load, for an alternating direction of rotation.

The locking collar is preferably tightened in the direction of rotation and secured by means of a grub screw. This location method prevents damage to the shaft and can be easily loosened again.

With the exception of a few series, sealed bearings can be relubricated.

✎ *Corrosion protection*

The inner rings up to d = 60 mm and the locking collars in general have a Corrotect coating and are thus protected against fretting corrosion. This is not valid for the series RALE..-XL-NPP(-B).

4
Location by means of eccentric locking collar

GE..-XL-KRR-B

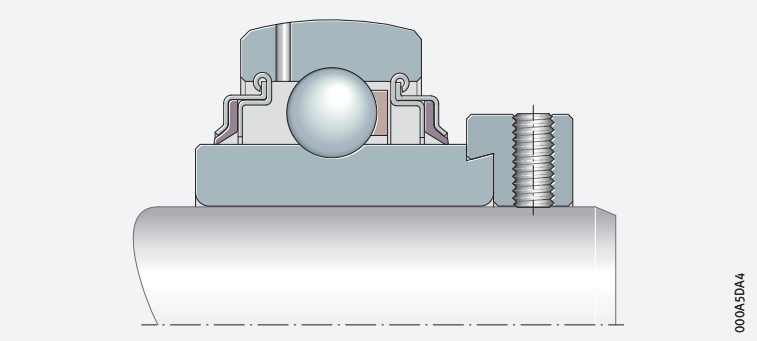

Radial insert ball bearings with eccentric locking collar and slots in the outer ring

The basic design of series RAE..-XL-NPP-NR is a radial insert ball bearing with an eccentric locking collar and an inner ring extended on one side ➤*1443*|*5*.

The outer ring has a cylindrical outside surface and two slots to DIN 616 and ISO 464. The bearings are fitted in cylindrical bores and axially located by easy-to-fit snap rings. The bearing is supplied with one snap ring to DIN 5417 already fitted.

The radial insert ball bearings are greased and cannot be relubricated.

✎ *Corrosion protection*

Inner rings up to a bore diameter d = 60 mm have a Corrotect coating and are thus protected against fretting corrosion.

5
Radial insert ball bearing with cylindrical outside surface and two slots in outer ring

RAE..-XL-NPP-NR

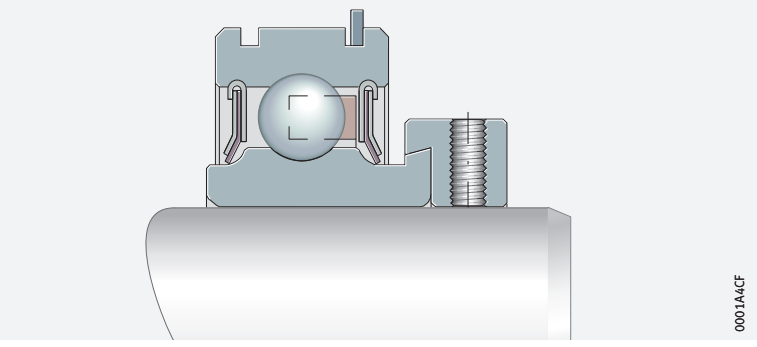

Radial insert ball bearings with grub screws in the inner ring

In the case of these radial insert ball bearings, the inner ring is located on the shaft by means of two grub screws offset by 120° ➤*1444*|*6*. This location method is suitable for bearing arrangements with a constant direction of rotation or, under low speed and load, for an alternating direction of rotation.

The grub screws are self-retaining and have a fine pitch thread with cup point for secure location of the bearings.

With the exception of series AY..-XL-NPP-B, the bearings can be relubricated.

6
Location by means of grub screws in the inner ring

GYE..-XL-KRR-B

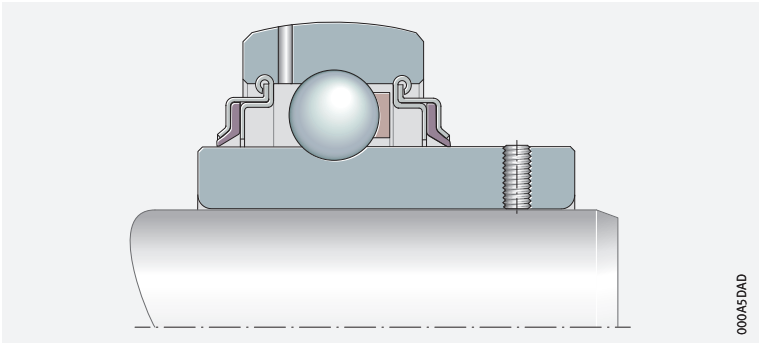

Radial insert ball bearings with adapter sleeve

In the case of this series, the inner ring is located on the shaft by means of an adapter sleeve with a locknut and a tab washer ➤*1444*|*7*. These radial insert ball bearings are suitable for shafts up to tolerance class h11 Ⓔ.

The bearings can be relubricated.

✎ Suitable for very high speeds

This location method is suitable for bearing arrangements with a constant or alternating direction of rotation and for high speeds.

The adapter sleeve and locknut give concentric, force locking location of the bearing inner ring on the shaft. As a result, the speeds that can be achieved are approximately the same as with deep groove ball bearings. These bearings also give quieter running than normal radial insert ball bearings. The adapter sleeve, locknut and tab washer are all zinc-coated.

✎ Reversing operation

The bearings are highly suitable for reversing operation. As a result of the force locking connection, there is no occurrence of fretting corrosion between the shaft and the bore of the adapter sleeve.

✎ Interchangeability

Due to the integral adapter sleeve, the bearings have the same radial dimensions as, and slightly lower basic load ratings than, radial insert ball bearings with an eccentric locking collar, or with grub screws in the inner ring, and are interchangeable with these bearings.

7
Location using adapter sleeve and locknut

GSH..-XL-2RSR-B

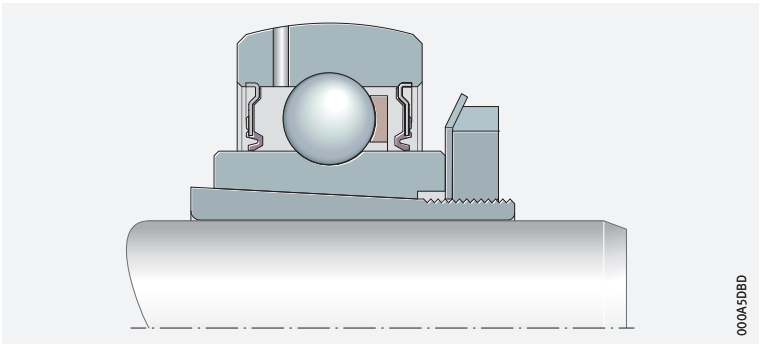

Radial insert ball bearings with drive slot

Suitable as non-locating bearings for low speeds

Radial insert ball bearings with a drive slot in the inner ring are non-locating bearings with good high temperature characteristics ➤*1445*|*8*. Non-locating bearings are used at low speeds and loads to compensate for elongations of the shaft.

Due to the slot, they are easy to locate in a radial direction. Rotation is prevented by means of a drive pin on the shaft or a set collar with a pin. The non-locating bearings are suitable for drawn shafts of tolerance classes h5 Ⓔ to h7 Ⓔ.

The bearings can be relubricated.

Corrosion protection

Inner rings up to a bore diameter d = 60 mm have a Corrotect coating and are thus protected against fretting corrosion.

8
Location by means of drive slot

GLE..-XL-KRR-B

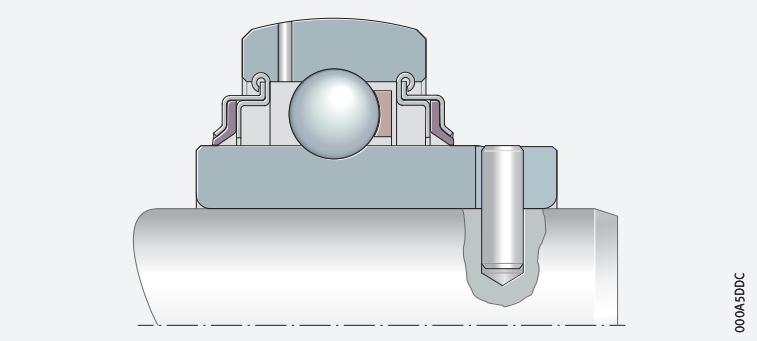

Self-aligning deep groove ball bearings with bore for fit

Self-aligning deep groove ball bearings are available with a cylindrical bore for a fit seat ➤*1445*|*9* and with a reamed square or hexagonal bore ➤*1446*|*11*.

The outer ring has a spherical outside surface.

Bearings with a fit seat on the shaft can achieve the same speeds as standard ball bearings. These are suitable for bearing arrangements with an alternating direction of rotation and offer smooth running.

9
Self-aligning deep groove ball bearing with fit seat

2..-XL-NPP-B

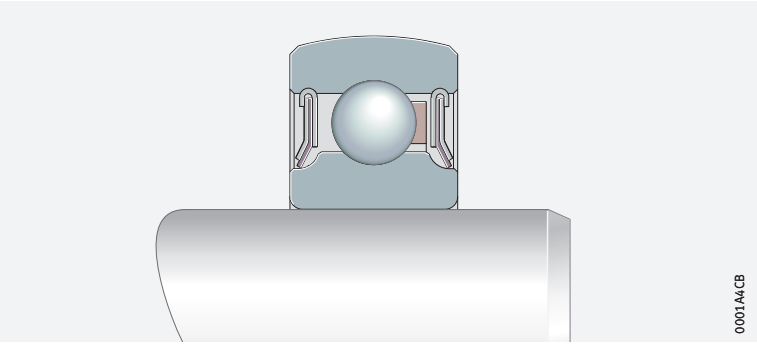

For self-aligning deep groove ball bearings with a fit seat, the fit data for ball bearings apply.

Deep groove ball bearings with bore for fit

These bearings have a cylindrical outer ring and are fitted in cylindrical bores ➤*1446*| *10*. The inner ring is extended on both sides and is located on the shaft using a fit. Due to the extended inner ring, additional axial spacer rings are not required.

The concentric seat allows speeds equivalent to those of standard ball bearings, while the load can be either constant or alternating. Smooth running is also achieved.

The tolerance of the inner ring bore corresponds to tolerance class Normal in accordance with ISO 492.

The sheet steel washers extended outwards and angled downwards form a large grease reservoir.

10
Deep groove ball bearing with extended inner ring and bore for fit

2..-XL-KRR
2..-XL-KRR-AH

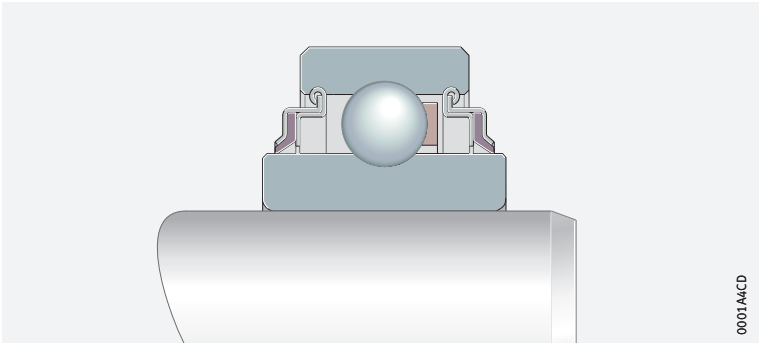

Self-aligning deep groove ball bearings with profiled bore

✎ *Transmission of high torques*

Bearings with a profiled bore are used where shafts must transmit very high torques and this is only possible using square or hexagonal shafts ➤*1446*| *11*. Rotation is prevented by form fit.

These bearings have a spherical or cylindrical outer ring and an inner ring that is extended on both sides ➤*1446*| *11* and ➤*1447*| *12*. Shafts of tolerance class h11 Ⓔ are recommended.

The bearings are greased to their maximum, some designs with a spherical outside surface can also be relubricated.

✎ *Corrosion protection*

The bearings have a Corrotect coating.

11
Self-aligning deep groove ball bearings with profiled bore

① *Square bore*
② *Hexagonal bore*

VK..-KTT-B
SK..-KRR-B

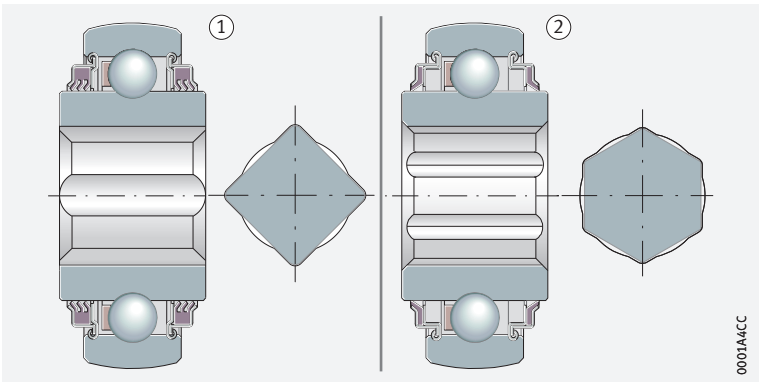

12
Deep groove ball bearings with extended inner ring and profiled bore

① *Hexagonal bore*

SK..-KRR
SK..-KTT

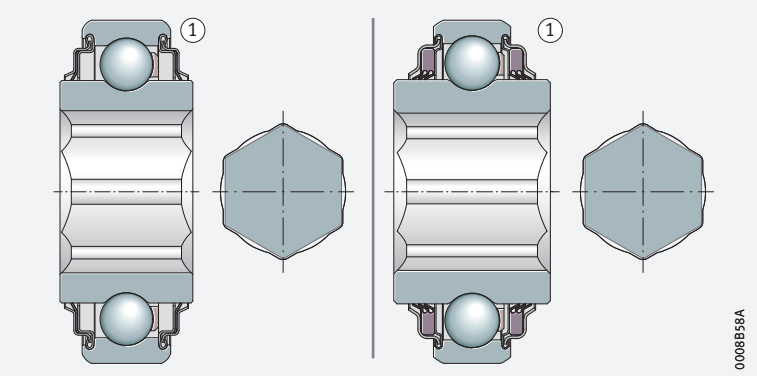

Radial insert ball bearings with rubber interliner

Radial insert ball bearings with a rubber interliner are located on the shaft using an eccentric locking collar. The outer ring is encased in a thick-walled NBR interliner ➤*1447*| *13*.

13
Radial insert ball bearings with rubber interliner

① *CRB..-XL with locating shoulder*
② *RABR(A,B)*
③ *RCR(A,B)*
④ *RCSM(A,B)*

Structure of bearing designation ➤*1475*| *19*

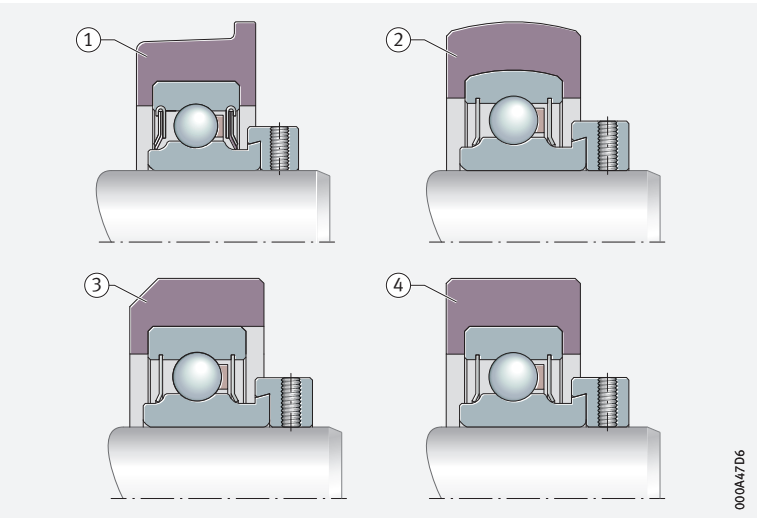

✎ *Damping of running noise*

The interliner absorbs vibrations and shocks and thus gives damping of running noises.

✎ *Various types*

The interliners have a spherical or cylindrical outside surface.

For roll bearing arrangements, one series has a locating shoulder on the rubber interliner.

Bearings with rubber interliners cannot be relubricated.

Note the tube and housing diameters for radial insert ball bearings with rubber interliner:

- CRB: tube inside diameter D –0,6 to –1,6
- RABR, RCR, RCSM: housing diameter D –0,25 to –0,35.

✎ *Corrosion protection*

The inner ring and locking collar have a Corrotect coating and are thus protected against fretting corrosion. This is not valid for series with the radial insert ball bearing RALE..-XL-NPP(-B).

Radial insert ball bearings with steel aligning ring

These bearings are based on radial insert ball bearings with an eccentric locking collar or on self-aligning deep groove ball bearings, but additionally have an axially split outer ring as an aligning ring ➤ *1448* | *14*. They are mounted in cylindrical bores and can compensate static misalignments of the shaft up to ±5°.

In series PE, the inner ring is located on the shaft by means of a locking collar while, in series BE, it is located by a fit.

Radial insert ball bearings with an aligning ring cannot be relubricated.

Suitable for sheet metal constructions

Due to the annular slots in the outer ring to DIN 616, they are highly suitable for sheet metal constructions. In this case, they are axially located using snap rings to DIN 5417.

The fit tolerances of the aligning rings are those of the deep groove ball bearings. Select the fit for the shaft and housing such that the outer ring of the radial insert ball bearing can undergo self-alignment.

Corrosion protection

The aligning ring has a Corrotect coating and is thus protected against fretting corrosion. In the case of series PE..-XL, the inner ring and locking collar also have a coating.

14
Radial insert ball bearing with steel aligning ring

PE..-XL

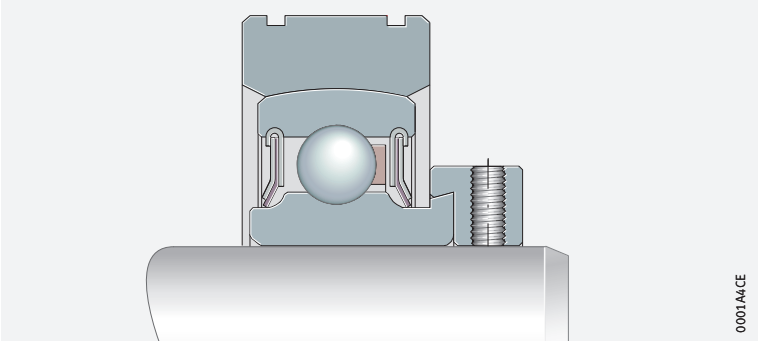

Corrosion-resistant bearings in a VA design or with a Corrotect coating in accordance with ISO

The radial insert ball bearings SUB, SUC and SUG, as well as the radial insert ball bearings with the suffix FA125, are designed for corrosion-resistant bearing arrangements. They are therefore equally suitable for applications involving humidity, contaminated water, salt spray mist and for cleaning agents. Their classic areas of application include the agricultural, construction and mining sector, conveying equipment, textile, paper and woodworking machinery, as well as machinery for the food and drink industry.

Corrosion-resistant VA design or with Corrotect coating

The bearings are available in a corrosion-resistant VA design or with a Corrotect thin film coating ➤*1449*|*15*. They correspond in their design to single row deep groove ball bearings 62, are ready to fit, particularly easy to fit and allow robust, economical bearing arrangements with a long operating life. They are located on the shaft by means of grub screws in the extended inner ring or by means of an eccentric locking collar.

Operation even under difficult conditions is ensured by seals and greases that are matched to the application.

15
Corrosion-resistant radial insert ball bearings, with Corrotect coating or in VA design

① *SUC (VA design)*
② *SUG (VA design)*
③ *GRAE..-NPP-B-FA125 (with Corrotect coating)*

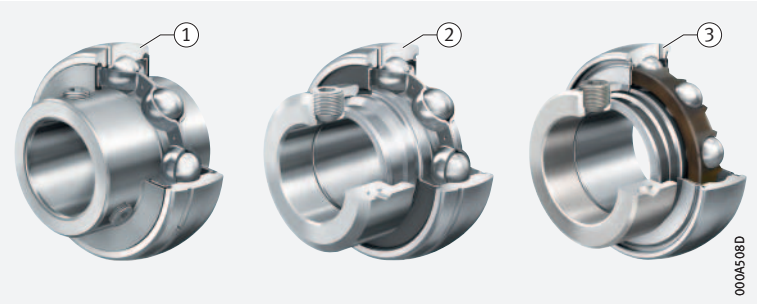

Radial insert ball bearings in corrosion-resistant VA design

In the case of radial insert ball bearings SUB, SUC and SUG, the bearing rings, eccentric locking collar and rolling elements are made from high alloy, corrosion-resistant rolling bearing steel with an increased chromium and molybdenum content, material number 1.4125.

Sheet steel cages made from corrosion-resistant steel, material number 1.4301, retain and guide the rolling elements.

Location by means of corrosion-resistant VA grub screws

The inner ring is located axially on the shaft by means of two corrosion-resistant VA grub screws, material number 1.4301, offset by 120°. This location method is suitable for bearing arrangements with a constant direction of rotation or, under low speed and load, for an alternating direction of rotation.

The grub screws are self-retaining and have a fine pitch thread with cup point for secure location of the bearings when taking account of the stated tightening torques ➤*1492*|*30*.

Location using corrosion-resistant VA eccentric locking collar

The bearings are located on the shaft by means of a corrosion-resistant VA locking collar. They are thus particularly suitable for bearing arrangements with a constant direction of rotation or, under low speed and load, for an alternating direction of rotation.

The locking collar is preferably tightened in the direction of rotation and must be secured by means of a grub screw. This location method prevents damage to the shaft and can be easily loosened again.

✎ *Media resistance*

In the food industry in particular, the resistance of the material in relation to various cleaning agents is of increasing importance ➤ *1450* | ▦ *1*.

▦ **1**
Resistance to media

Medium + resistant (+) moderately resistant (–) barely resistant – not resistant	Concentration %	X5CrNi18-10 (1.4301)		440C (1.4125)	
		+20 °C	+80 °C	+20 °C	+80 °C
Hydrochloric acid HCl	0,1	+	+	–	–
	1	(+)	–	–	–
	18	–	–	–	–
Hydrofluoric acid HF	1	–	–	–	–
	5	–[1]	–	–[1]	–
Sulphuric acid H_2SO_4	1	+	–	–	–
	10	(+)	–	–	–
	96	+	(+)	–	–
Sulphurous acid H_2SO_3	1	+	+	–	–
Nitric acid HNO_3	5	+	+	–	–
	25	+	+	+	(+)
	65	+	+	+	(+)
Phosphoric acid H_3PO_4	1	+	+	+	+
	10	+	+	(+)	+
	85	+	+	+	–
Formic acid HCOOH	5	+	+	–	–
	25	+	+	–	–
Acetic acid CH_3COOH	5	+	+	+	–
	25	+	+	+	–
Citric acid	5	+	+	+	+
	25	+	+	–	–
Chloroacetic acid	5	+	+	(+)	–
Sodium chloride NaCl	10	+	+	(–)	(–)
Sea water	4	+	+	(–)	(–)
Distilled water	–	+	+	+	+
Ammonium hydroxide NH_4OH	1	+	+	+	+
	10	+	+	+	+
Potassium hydroxide solution KOH	0,1	+	+	+	+
	1	+	+	+	+
	10	+	+	+	+
Sodium hypochlorite solution	1	+[1]	+	[2]	(–)
Hydrogen peroxide H_2O_2	5	+	+	+	+

[1] *Not tested. Estimate generated from remaining test series.*

[2] *Not tested. No estimate possible.*

Radial insert ball bearings with Corrotect coating

The radial insert ball bearings GRAE..-XL-NPP-B-FA125 and GE..-XL-KRR-B-FA125 have a Corrotect thin film coating on all surfaces.

Plastic cages made from polyamide PA66 retain and guide the rolling elements.

✎ *Anti-corrosion coating system Corrotect*

The Corrotect thin film coating technology is an economical alternative to radial insert ball bearings with conventional corrosion protection. The thickness of the coating film is between 2 µm and 5 µm.

The advantages of the Corrotect thin film coating are:

- All surfaces are protected against corrosion, including the turned surfaces of chamfers and radii
- Rust beneath seals is prevented in the long term
- Smaller spots that are damaged by the application and are bright as a result remain protected against corrosion by the cathodic protection effect
- Operating life is significantly longer compared to uncoated parts due to the corrosion protection
- Uncoated bearings and housings are fully interchangeable with the coated versions of the same design
- Bearings and housings made from corrosion-resistant rolling bearing steel are often no longer required

The use of the Corrotect thin film coating is not permitted for direct contact with foodstuffs.

✎ *Media resistance*

The resistance of the Corrotect thin film coating to various media must be taken into consideration ➤ *1451* | ▦ *2*.

▦ **2**
Resistance to media

Chemicals	Corrotect coating[1)]
Neutral, organic fluids (oil, brake fluid, petrol)	Resistant
Aqueous salt solutions in the neutral range 6 ≦ pH ≧ 8 (table salt NaCl, seawater applications)	Conditionally resistant
Acidic liquids (pH ≦ 6)	Not resistant
Alkaline liquids (pH ≧ 8)	Not resistant
Oxidising substances (ozone, chlorine, peroxides, hypochlorides)	Not resistant

1) *Valid for Corrotect coatings based on zinc and zinc alloy.*

✎ *Location by means of locking collar*

The bearings are located on the shaft by a locking collar. They are thus particularly suitable for bearing arrangements with a constant direction of rotation or, under low speed and load, for an alternating direction of rotation.

The locking collar is preferably tightened in the direction of rotation and must be secured by means of a grub screw. This location method prevents damage to the shaft and can be easily loosened again.



Black Series in accordance with JIS B 1558

FAG radial insert ball bearings with a spherical outer ring are based on single row deep groove ball bearings 62 and are designed in accordance with JIS B 1558. The Black Series radial insert ball bearings are available with two location methods and one type of seal. They can be relubricated and are particularly easy to install.

The radial insert ball bearings are pregreased and can be relubricated by means of two lubrication holes in the outer ring.

Cages made from plastic

The bearings have plastic cages ➤*1467* and are sealed on both sides by single piece seals RSR with a vulcanised seal lip and an outer flinger shield.

Quiet running, low frictional torque

The honed raceways of the bearing rings, in conjunction with the high ball grade, ensure quiet running and a reduced frictional torque.

Basic corrosion protection Durotect BS

The inner and outer rings as well as the flinger shields are provided with the black Durotect BS coating in order to offer basic protection against corrosion.

Adapter sleeves have a Durotect BS or phosphate coating.

Location on shaft

Location by means of grub screws

In the radial insert ball bearings UC, the inner ring is located on the shaft by means of two grub screws offset by 120° ➤*1452*|*16*. They are suitable for bearing arrangements with a constant direction of rotation or, under low speed and load, for an alternating direction of rotation.

The grub screws are self-retaining and have a fine pitch thread with cup point for secure location of the bearings. In order to allow better differentiation, the metric grub screws have a Durotect BS coating while the inch size grub screws are zinc-coated.

16
Location by means of grub screws in the inner ring

UC

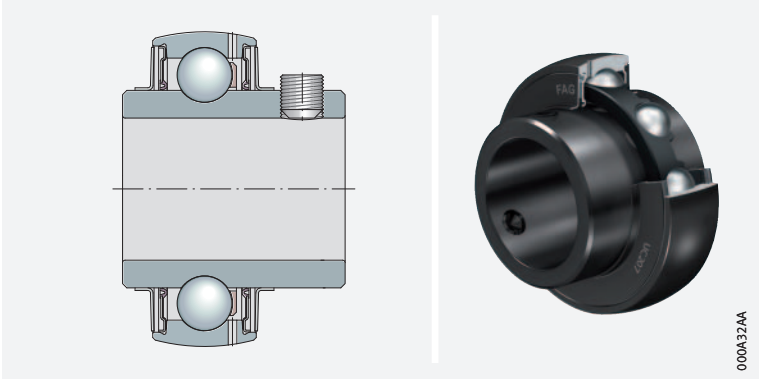

Location by means of adapter sleeve

In the radial insert ball bearings UK, the inner ring is located on the shaft by means of a concentric adapter sleeve in accordance with JIS B 1552 ➤*1452*|*17*. The inner and outer roughness of the adapter sleeve is Ra 2,5. They are suitable for bearing arrangements with an alternating direction of rotation, even under high speed and load.

17
Location by adapter sleeve

UK

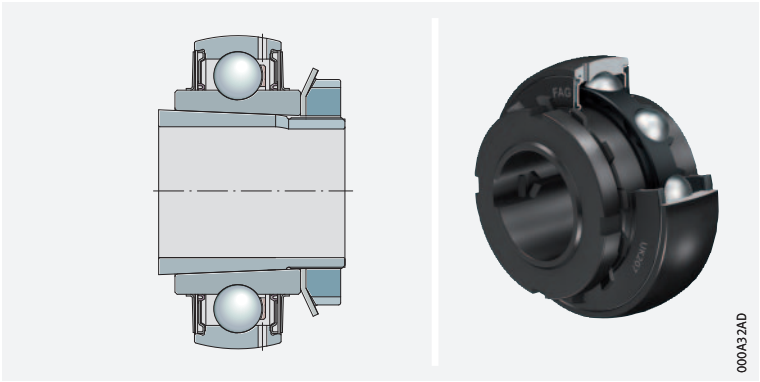

Comparison of radial insert ball bearing series

The possible dimensions and features of the standard bearings are presented in the following table ➤*1454*|▦*3*. The corrosion-resistant radial insert ball bearing range and the radial insert ball bearings in accordance with JIS (Black Series) are summarised separately ➤*1456*|▦*4*.



3
Features of radial insert ball bearings, comparison of standard bearing series

Series	Shaft diameter				Location
	mm		inch		
	from	to	from	to	
GE..-XL-KLL-B	20	50	–	–	Eccentric locking collar
E..-XL-KLL	20	50	–	–	Eccentric locking collar
GRAE..-XL-NPP-B	12	60	–	–	Eccentric locking collar
GRA..-NPP-B-AS2/V	–	–	5/8	1 15/16	
RABRB..-XL-FA106	12	50	–	–	Eccentric locking collar
RABRA..-XL-FA106	30	–	–	–	
RAE..-XL-NPP-B	12	50	–	–	Eccentric locking collar
RA..-NPP-B	–	–	3/4	1 1/2	
RALE..-XL-NPP-B	20	30	–	–	
PE..-XL	20	40	–	–	
RCSMB..-XL-FA106	15	25	–	–	Eccentric locking collar
RCSMA..-XL-FA106	30	–	–	–	
RCRA..-XL-FA106	20	–	–	–	
RCRB..-XL-FA106	20	–	–	–	
CRB..-XL	20	35	–	–	
RAE..-XL-NPP	12	60	–	–	Eccentric locking collar
RALE..-XL-NPP	20	30	–	–	
RAE..-XL-NPP-NR	20	40	–	–	
RA..-NPP	–	–	5/8	1 1/2	
RAL..-NPP	–	–	3/4	–	
GE..-XL-KRR-B	17	120	–	–	Eccentric locking collar
G..-KRR-B-AS2/V	–	–	15/16	2 15/16	Eccentric locking collar
GE..-XL-KRR-B-2C	25	40	–	–	
GNE..-XL-KRR-B	30	100	–	–	
E..-XL-KRR-B	25	40	–	–	Eccentric locking collar
NE..-XL-KRR-B	50	–	–	–	
GE..-XL-KRR-B-FA101	20	75	–	–	Eccentric locking collar
GE..-XL-KRR-B-FA164	20	90	–	–	
E..-XL-KRR	20	70	–	–	Eccentric locking collar
GE..-XL-KTT-B	20	80	–	–	Eccentric locking collar
GAY..-XL-NPP-B	12	60	–	–	Grub screws
GAY..-NPP-B-AS2/V	–	–	5/8	1 7/16	
GYE..-XL-KRR-B	12	90	–	–	
GY..-KRR-B-AS2/V	–	–	1/2	2 15/16	
AY..-XL-NPP-B	12	30	–	–	Grub screws
GAY..-XL-NPP-B-FA164	12	15	–	–	Grub screws
GLE..-XL-KRR-B	20	70	–	–	Drive slot
BE..-XL	20	40	–	–	Fit
2..-XL-NPP-B	12	50	–	–	Fit
2..-XL-KRR(-AH)	13	60	–	–	
SK(E)..-KRR-B	16,1	38,1	–	–	Hexagonal bore
SK..-KRR	–	–	7/8	1 1/4	
SK..-KTT-B	–	–	7/8	1 1/4	Hexagonal bore
SK..-KTT	–	–	1 1/4	1 3/4	
GSH..-XL-2RSR-B[3)]	20	50	–	–	Adapter sleeve
GVK(E)..-KRR-B-AS2/V	16,3	–	–	–	Square bore
VK(E)..-KTT-B	25,4	38	1	–	
GVK(E)..-KTT-B(-AS2/V)	25,4	39,7	1	1 9/16	

1) *Recommended application temperature. If temperatures exceed +100 °C, relubrication must be carried out regularly.*

2) *Temporary temperature peaks are possible up to 120 °C.*

3) *Pay attention to the interchangeability of the bearing* ➤ *1444*

Accessories	Seal	Compensation of misalignment	Internal clearance Group	Cage	Grease	Relubrication facility	Temperature[1] °C from	Temperature[1] °C to	Comments	Product table Page
–	L	yes	5	Steel	L069	yes	–40	+180	–	➤1496
–	L	no	3	PA66	GA13	no	–20	+100[2]	–	➤1504
–	P	yes	3	PA66	GA13	yes	–20	+100[2]	–	➤1496
										➤1512
Rubber interliner	P	yes	3	PA66	GA13	no	–20	+85	–	➤1534
									Light series	➤1534
–	P	yes	3	PA66	GA13	no	–20	+100[2]	–	➤1496
									–	➤1512
									Light series	➤1496
Aligning ring									Annular slots in aligning ring	➤1536
Rubber interliner	P	no	3	PA66	GA13	no	–20	+85	–	➤1534
									Light series	➤1534
									Light series, mounting chamfer	➤1534
									Mounting chamfer	➤1534
									Abutment shoulder	➤1534
–	P	no	3	PA66	GA13	no	–20	+100[2]	–	➤1504
									–	➤1504
									Two slots, one snap ring	➤1504
									–	➤1518
									–	➤1518
–	R	yes	3	PA66	GA13	yes	–20	+100[2]	–	➤1496
–	R	yes	3	PA66	GA13	yes	–20	+100[2]	–	➤1512
									Flinger shields	➤1496
									Heavy series	➤1498
–	R	yes	3	PA66	GA13	no	–20	+100[2]	–	➤1496
									Heavy series	➤1500
–	R	yes	5	Steel	L069	yes	–40	+180	PTFE seal lip	➤1496
					GA11		+150	+250		➤1496
–	R	no	3	PA66	GA13	no	–20	+100[2]	–	➤1504
–	T	yes	3	PA66	GA13	yes	–20	+100[2]	–	➤1496
–	P	yes	3	PA66	GA13	yes	–20	+100[2]	–	➤1508
										➤1512
										➤1508
										➤1512
–	P	yes	3	PA66	GA13	no	–20	+100[2]	–	➤1508
–	P	yes	5	Steel	GA11	yes	+150	+250	PTFE seal lip	➤1508
–	R	yes	5	Steel	L069	yes	–40	+180	PTFE seal lip	➤1522
Aligning ring	P	yes	N	PA66	GA13	no	–20	+100[2]	Annular slots in aligning ring	➤1536
–	R	yes	N	PA66	GA13	no	–20	+100[2]	–	➤1524
		no								➤1526
–	R	yes	3	PA66	GA13	no	–20	+100[2]	Corrosion-resistant, maximum greasing	➤1530
		no								➤1532
–	T	yes	3	PA66	L402	no	–20	+100[2]	Corrosion-resistant, maximum greasing	➤1530
		no			GA13					➤1532
–	RSR	yes	4	PA66	GA13	yes	–20	+100[2]	–	➤1520
–	R	yes	3	PA66	GA13	yes	–20	+100[2]	Corrosion-resistant, maximum greasing	➤1528
	T					no				➤1528
	T					yes				➤1528

4
Features of radial insert ball bearings, comparison of series, corrosion-resistant and Black Series

Series	Shaft diameter				Location
	mm		inch		
	from	to	from	to	
Corrosion-resistant product range					
GRAE..-XL-NPP-B-FA125	20	60	–	–	Eccentric locking collar
GE..-XL-KRR-B-FA125	20	50	–	–	Eccentric locking collar
SUB	20	50	–	–	Grub screws
SUC	12	50	–	–	Grub screws
SUG	20	50	–	–	Eccentric locking collar
Black Series (radial insert ball bearings in accordance with JIS)					
UC	12	90	1/2	3 1/2	Grub screws
UK	20	80	–	–	Adapter sleeve to JIS B 1552

1) Recommended application temperature. If temperatures exceed +100 °C, relubrication must be carried out regularly.

2) Temporary temperature peaks are possible up to 120 °C.

Seal	Compensation of misalignment	Internal clearance	Cage	Grease	Relubrication facility	Temperature[1] °C from	Temperature[1] °C to	Comments	Product table Page
P	yes	Group 3	PA66	GA47	yes	–20	+100[2]	Corrosion-resistant, Corrotect coating	➤*1544*
R	yes	Group 3	PA66	GA47	yes	–20	+100[2]	Corrosion-resistant, Corrotect coating	➤*1544*
RSR	yes	Group 3	Corrosion-resistant VA steel	FM222	yes	–35	+100	Corrosion-resistant, VA design	➤*1538*
RSR	yes	Group 3	Corrosion-resistant VA steel	FM222	yes	–35	+100	Corrosion-resistant, VA design, with flinger shield	➤*1540*
RSR	yes	Group 3	Corrosion-resistant VA steel	FM222	yes	–35	+100	Corrosion-resistant, VA design	➤*1542*
RSR	yes	C3	PA66	GA13	yes	–20	+100[2]	Black Series, Durotect BS coating, basic corrosion protection	➤*1546*
RSR	yes	C4	PA66	GA13	yes	–20	+100[2]	Black Series, Durotect BS coating, basic corrosion protection	➤*1552*



1.2 Load carrying capacity

Radial load carrying capacity

Suitable for very high radial loads

The balls are in contact with the raceways at one point only. Under purely radial load, the contact points between the rolling elements and raceways lie at the centre of the raceway. As a result, the connection between the contact points passes through the radial plane, i.e. the optimum load direction is a purely radial load ➤*1442*|*2* and ➤*1442*|*3*. Radial insert ball bearings can therefore support very high radial loads.

Larger ball sets permit higher loads

The load carrying capacity is dependent on the bearing series and the size of the ball set in the reference bearings. As a result, the deep groove ball bearing series 60 with a smaller bearing cross-section cannot support loads as high as those with the standard series 62 of the same dimensions (relative to the bore diameter d) with a larger ball set. The heavy bearing series 63 with the largest ball set is suitable for even higher loads when used for the same bore diameter ➤*1458*|*18*.

18
Reference bearings, comparison of cross-section and load carrying capacity for bearings with d = 40 mm

C_r = *basic dynamic load rating*

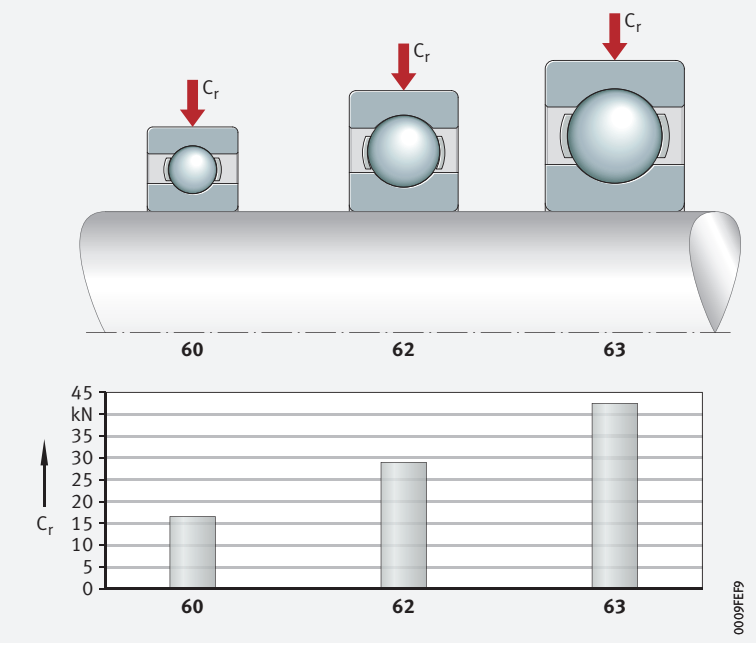

Axial load carrying capacity

Capable of supporting axial loads in both directions

Due to the deep raceway grooves in the bearing rings and the narrow osculation between the raceway grooves and balls, radial insert ball bearings can support axial loads in both directions ➤*1442*|*2* and ➤*1442*|*3*. The axial load carrying capacity is dependent, for example, on the bearing size, the internal construction and the operating clearance.
If the axial load is too high, however, this can increase the running noise and considerably reduce the operating life of the bearings.

If there is any uncertainty regarding the axial load carrying capacity of the bearings, please consult Schaeffler.

1.3 Compensation of angular misalignments

The units must not be used to support swivelling or tumbling motion ➤*1460*.

Compensation of static misalignments

Bearings with a spherical outer ring outside surface, fitted in housings with a concave bore, can compensate for static misalignment of the shaft ➤*1459*|*19*, ➤*1459*|*20* and ➤*1459*|*21*.

The compensation of misalignments must be within the permissible angle of ±5° for maintenance-free housing units or ±2,5° for housing units with a relubrication facility. The precondition is that the centre axes of the inner rings must lie on a common straight line.

For units with a lubrication groove in the housing and lubrication hole in the radial insert ball bearing, the following applies:

- Up to ±2,5°, the units can be relubricated.
- Between ±2,5° and ±5°, the possibility of relubrication is dependent on the specific unit. Please contact us in this case.
- Over ±5°, relubrication is no longer possible

19
Compensation of static housing misalignment

±5° for maintenance-free bearings
±2,5° for bearings with relubrication facility

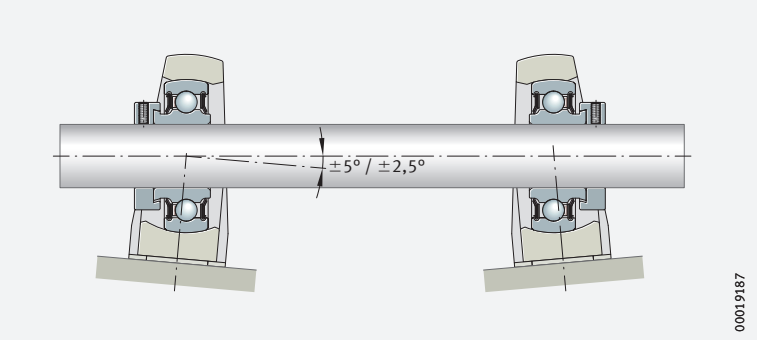

20
Compensation of static shaft misalignment

±5° for maintenance-free bearings
±2,5° for bearings with relubrication facility

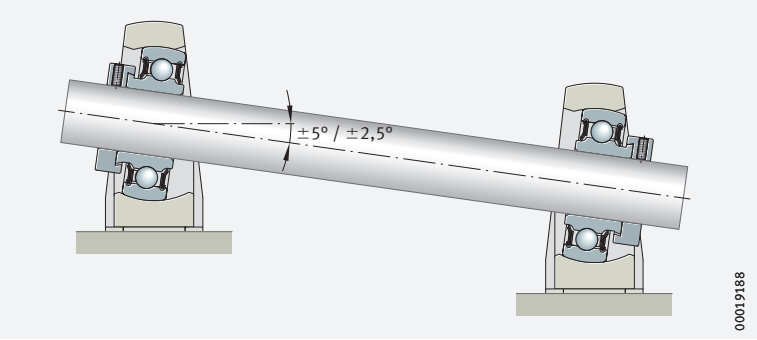

21
Compensation of static shaft misalignment

±5° for maintenance-free bearings

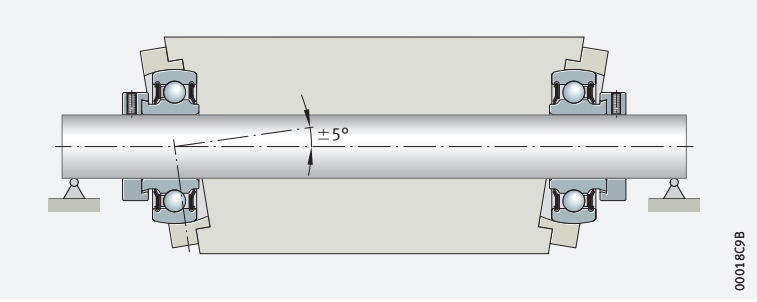

Radial insert ball bearings are not suitable for continuous oscillating motion of the outer ring in the housing bore

Radial insert ball bearings cannot be used if the outer ring undergoes continuous oscillating motions in the housing bore. This is the case if the shaft has an excessively large undersize or the centre axes of the inner rings deviate so much from a common straight line that the tilting clearance present in the bearing is exceeded. In this case, the outer ring is included in the oscillating motion of the bearing occurring with each revolution by the ball set of the inner ring. This situation is shown in the figures for a bent shaft and a roller with journals that are parallel but not in alignment ➤*1460*| *22* and ➤*1460*| *23*. This geometrical defect of the machine parts causes tilting of the bearing during mounting and continuous oscillating motion of the outer ring during rotation.

22
Oscillating motion of outer rings with a bent shaft

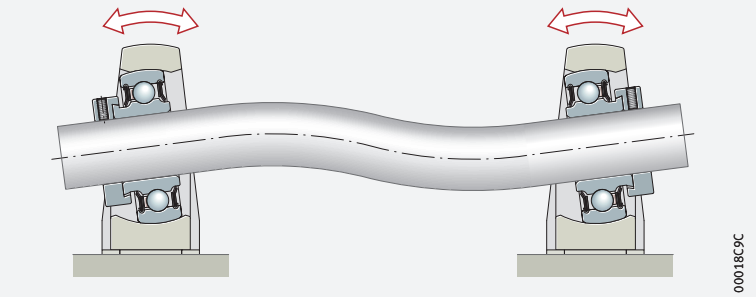

23
Oscillating motion of outer rings with non-aligned journal

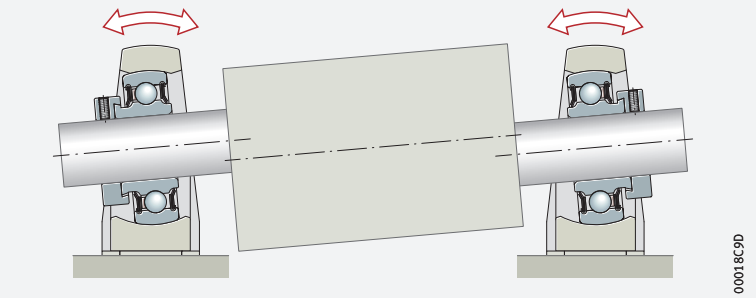

An underdimensioned shaft will cause continuous tumbling motions

A critical situation also arises with a bearing arrangement of an underdimensioned shaft ➤*1460*| *24*. While it is still aligned when free from load, it bends under load as shown by the example of a return roller. As a result, the bearings undergo continuous tumbling motion. If circumferential load is still present on the outer ring in this case, the deflection of the housing bore is accelerated (leading to wear).

24
Oscillating motion of outer rings with a deflected shaft

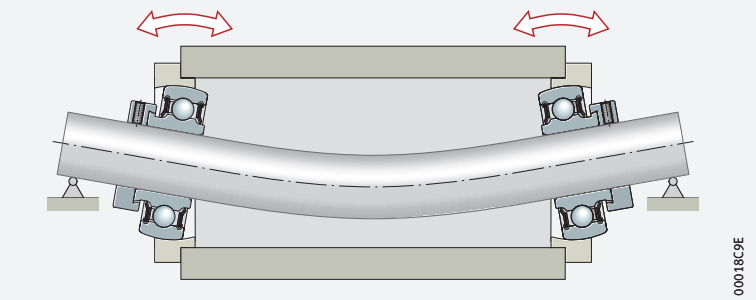

1.4 Lubrication

Radial insert ball bearings sealed on both sides are lubricated with a high quality lithium soap grease with a mineral oil base, which has good anti-corrosion characteristics ➤ *1461*|▦ *5*. Bearings with a spherical outside surface can be relubricated, with the exception of a few series (such as AY..-XL-NPP-B).

Radial insert ball bearings with a cylindrical outside surface have the maximum grease filling. The grease filling is measured so that it is sufficient for the entire life of the bearing. As a result, these bearings are generally maintenance-free. Radial insert ball bearings can have sheet steel washers extended outwards and angled downwards, forming a larger grease chamber. Only a few designs with a cylindrical outside surface can be additionally relubricated.

Radial insert ball bearings with a rubber interliner or aligning ring cannot be relubricated.

▦ *5*
Recommended greases for radial insert ball bearings

Designation	Classification	Type of grease	Recommended Arcanol grease for relubrication
GA13	Standard ball bearing and insert bearing grease for D > 62 mm	Lithium soap Mineral oil	**MULTI3**
GA22	Free-running grease with low frictional torque	Lithium soap Ester oil	–
L069	Radial insert ball bearing grease for wide temperature range	Polycarbamide Ester oil	–
GA11	Rolling bearing grease resistant to media for temperatures up to +250 °C	PTFE Alkoxyfluoroether	**TEMP200**
GA47	Rolling bearing grease resistant to media for temperatures up to +140 °C	Barium complex soap Mineral oil	–
L178	Rolling bearing grease for high speeds	Barium complex soap PAO oil	–

continued ▼

1) *GA stands for **G**rease **A**pplication Group, based on Grease Spec 00.*

▦ *5*
Recommended greases for radial insert ball bearings

Designation	Operating temperature range °C		Upper continuous limit temperature $\vartheta_{upper\ limit}$ [2] °C	NLGI class		Speed parameter $n \cdot d_M$ $min^{-1} \cdot mm$	ISO VG class (base oil)	
	from	to		from	to		from	to
GA13	–30	+120	+75	3	–	500 000	68	150
GA22	–50	+120	+70	2	–	1 500 000	10	22
L069	–40	+180	+120	2	–	700 000	68	220
GA11	–30	+260	+200	2	–	300 000	460	680
GA47	–20	+130	+70	1	2	350 000	150	320
L178	–20	+142	+75	2	–	800 000	22	46

continued ▲

2) *The upper continuous limit temperature $\vartheta_{upperlimit}$ must not be exceeded if a temperature-induced reduction in grease operating life is to be avoided.*

✎ *Compatibility with plastic cages*

When using bearings with plastic cages, compatibility between the lubricant and the cage material must be ensured if synthetic oils, lubricating greases with a synthetic oil base or lubricants containing a high proportion of EP additives are used.

Radial insert ball bearings in corrosion-resistant VA design

Initial greasing is carried out with an aluminium complex soap grease with food applications approval to NSF-H1, which is sufficient in many cases for the operating life of the bearings. For relubrication, the outer rings have lubrication holes on their circumference.

Black Series

The Black Series radial insert ball bearings in accordance with JIS are greased using a grease in Grease Group GA13 ➤ *1461*|▦ *5*.

1.5 Sealing

✎ *Non-contact or contact seals*

A basic distinction is made between contact and non-contact seals in the adjacent construction and the bearing.

The sealing arrangement has a considerable influence on the operating life of a bearing arrangement. Its function is to retain the lubricant in the bearing and prevent the ingress of contaminants into the bearing.

Contaminants may have various effects:

- A large quantity of very small, abrasive particles causes wear in the bearing. The increase in clearance or noise brings the operating life of the bearing to an end
- Large, overrolled hard particles reduce the fatigue life since pittings occur at the indentation points under high bearing loads

✎ *Type-specific seals*

The different designs of seals are explained below. The type-specific seals used in the individual radial insert ball bearings are summarised in the table of features ➤ *1454* | ▦ *3* and ➤ *1456* | ▦ *4*.

Overview of seal types

Seals for radial insert ball bearings are of a three-piece design. This concept offers, due to the rigidly rolled-in inner sheet steel washer, optimum seating in the bearing as well as concentric alignment of the seal lip to the inner ring. The contact seals on both sides of the bearing give protection against contamination and the loss of lubricant.

Seals for radial insert ball bearings are available in various designs ➤ *1462* | ▦ *6*. The stated suffix is included in the ordering designation and explained in the table of suffixes ➤ *1473* | *1.12*.

▦ *6*
Seal types

P seal (NPP)	
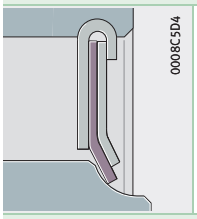 0008C5D4	Two zinc-coated sheet steel washers (or in a corrosion-resistant VA design) with intermediate NBR part, seal lip axially preloaded. In order to protect the seal lip from mechanical damage, the outer sheet steel washer extends a considerable distance down towards the bearing inner ring. For use in narrow radial insert ball bearings with inner ring extended on one side.
R seal (KRR)	
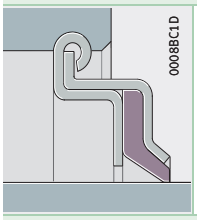 0008BC1D	Two zinc-coated sheet steel washers extended outwards and angled downwards with intermediate NBR or PTFE part and radially preloaded seal lip. Improved protection against mechanical damage. Substantial grease reservoir due to the sheet steel washers which are extended outwards and angled downwards. Used in radial insert ball bearings with inner ring extended on both sides.
R seal with flinger shield (KRR-..-2C)	
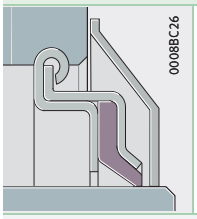 0008BC26	As R seal, but with outer flinger shield with corrosion protection. Additional sealing action without restriction on speed and with additional protection against mechanical damage.

continued ▼

6 *Seal types*

T seal (KTT)

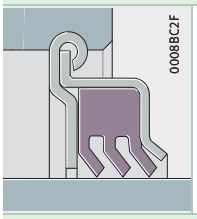

Two zinc-coated sheet steel washers with intermediate NBR part and three radially preloaded seal lips for protection against heavy contamination. For better protection of the seal lip against mechanical damage, the outer sheet steel washer is extended outwards and angled downwards and outwards.

Lower speeds due to higher friction.

L seal (labyrinth seal) (KLL)

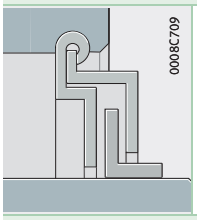

Two zinc-coated sheet steel washers extended outwards in the outer ring with a zinc-coated intermediate sheet steel L-section ring pressed onto the inner ring.

Substantial grease reservoir due to the sheet steel washers which are extended outwards and angled downwards.

For use in bearings with inner ring extended on both sides. For increased temperatures and lower friction.

RSR seal (2RSR)

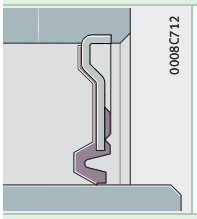

Single piece, zinc-coated sheet steel washer with vulcanised and radially preloaded seal lip made from NBR.

Used in radial insert ball bearings with integral adapter sleeve.

RSR seal with flinger shield

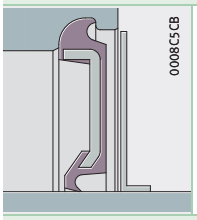

Single piece, sheet steel washer in corrosion-resistant VA design with vulcanised and radially preloaded seal lip made from NBR and additional flinger shield.
In the Black Series, the flinger shield has a Durotect BS coating.

Sealing cartridge with flinger shield

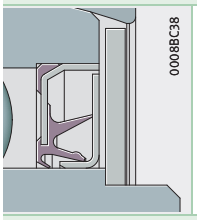

Design identical to normal cartridge seal but supplemented by a flinger shield to protect the bearing against high pressure cleaning equipment and mechanical damage.

Combined sealing washer and flinger shield with protective shield

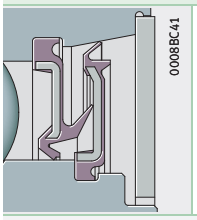

Design identical to normal sealing washer and flinger shield but supplemented by a protective shield to protect the bearing against high pressure cleaning equipment and mechanical damage.

continued ▲

BRS seals

Bearings with BRS seals can be supplied by agreement ➤*1464*|*25*.

✎ *Suitable for very high speeds*

The friction in this case is as low as that in bearings with sealing shields. They have the advantage over these, however, that the outer rubber-elastic rim gives good sealing when fitted in the slot in the outer ring. This is important in the case of a rotating outer ring, since the base oil in the grease is separated from the soap suspension by centrifugal force and would escape through the unsealed metallic seat in the outer ring if sealing shields were fitted.

25
BRS seals

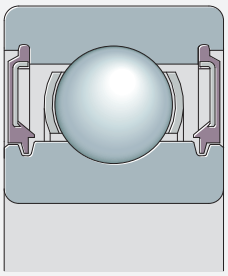

Non-contact seals in the adjacent construction

With non-contact seals, only lubricant friction occurs in the lubrication gap. The seals do not undergo wear and remain capable of operation for a long period. Since they generate no heat, non-contact seals are also suitable for very high speeds.

1.6 Speeds

Speed limits for radial insert ball bearings

The speed limits are dependent on the load, the clearance between the bearing bore and shaft and the friction of the seals in the case of bearings with contact seals.

✎ *Speed limits are guide values*

Guide values for the permissible speeds can be derived from the diagram ➤*1465*|*26*.

In the case of load ratios $C_r/P > 13$, the speeds can be increased. At $C_r/P < 5$, location by means of a fit is recommended for a shaft roughness of Ra 0,3 ➤*147*. In order to ensure slippage-free operation, the minimum radial load must be observed ➤*1479*|*1.15*.

26
Permissible speeds for radial insert ball bearings

n = *permissible speed*
d = *bore diameter*
C_r/P = *load ratio*
h5, h6, h9 = *shaft tolerance (subject to envelope requirement Ⓔ)*

① *Ball set*
② *With d = 12 mm, 15 mm and 17 mm, identical ball set 203*
③ *For radial insert ball bearings with seals L, P or R*
④ *For radial insert ball bearings with seals T*

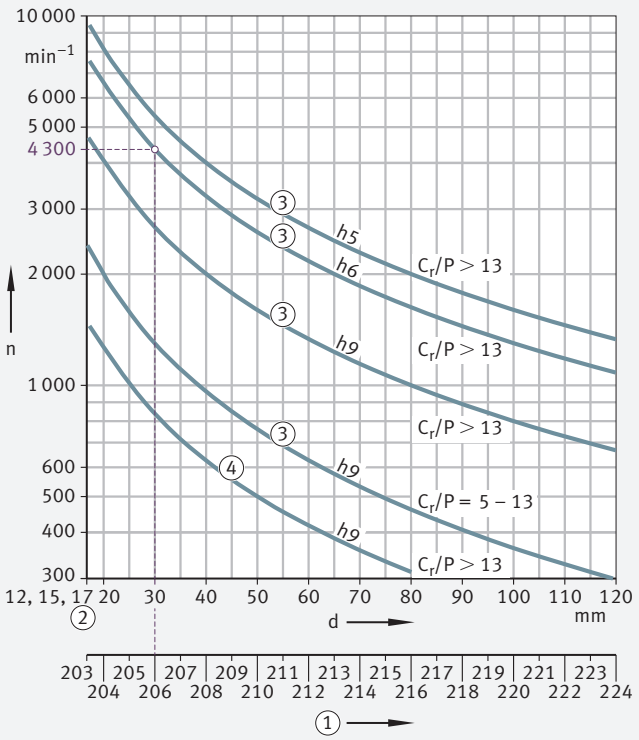

In the stated applications with load ratios $C_r/P < 5$, please contact us.

Example of permissible speed calculation

Given:

Shaft tolerance	h6 Ⓔ
Radial insert ball bearing	GRAE30-XL-NPP-B
Ball set	206
Basic dynamic load rating C_r	20 700 N
Load P	1 300 N
Sealing	seals P.

Required:

Load ratio C_r/P = 20 700 N/1 300 N	$C_r/P > 13$
Permissible speed	$n \approx 4\,300$ min^{-1} ➤*1465*|**26**.

1.7 Noise

Schaeffler Noise Index

The Schaeffler Noise Index (SGI) is not yet available for this bearing type ➤*69*. The data for these bearing series will be introduced and updated in stages.

Further information:

■ ***medias*** *https://medias.schaeffler.com*

1.8 Temperature range

The possible operating temperatures of radial insert ball bearings may differ according to the cage design and the material of the seal lips ➤*1466*|▦*7*.

Radial insert ball bearings for a high or expanded temperature range have the suffixes FA164 or FA101 in the designation ➤*1454*|▦*3*.

▦*7*
Permissible temperature ranges

Operating temperature	Radial insert ball bearing							
	with polyamide cage PA66 with NBR seal lip °C		with sheet steel cage with PTFE seal lip and labyrinth seal °C				with high grade steel cage with NBR seal lip °C	
			FA101[3]		FA164[4]			
	from	to	from	to	from	to	from	to
	–20	+100[1)2)]	–40	+180	+150	+250	–35	+100

1) Temporary temperature peaks are possible up to +120 °C.
2) In the case of radial insert ball bearings with a rubber interliner, the maximum operating temperature is reduced to +85 °C.
3) High and low temperature design (suffix FA101) ➤*1473*|*1.12*.
4) High temperature design (suffix FA164) ➤*1473*|*1.12*.

✎*Limiting values*

The operating temperature of the bearings is limited by:

- the dimensional stability of the bearing rings and rolling elements
- the cage
- the lubricant
- the seals

In the event of anticipated temperatures which lie outside the stated values, please contact Schaeffler.

1.9 Cages

Rolling bearing cages are subdivided into sheet metal and solid cages.

Both sheet metal and solid cages for radial insert ball bearings are exclusively ball-guided.

The most important functions of the cage are:

- to separate the rolling elements from each other, in order to minimise friction and heat generation
- to maintain the rolling elements at the same distance from each other, in order to ensure uniform load distribution
- to guide the rolling elements in the unloaded zone of the bearing

Sheet metal cages

These cages are predominantly made from steel ➤*1467*|⧉*27*.
In comparison with solid cages made from metal, they are of lower mass.

Since a sheet metal cage only fills a small proportion of the gap between the inner and outer ring, lubricant can easily reach the interior of the bearing and is held on the cage.

27
Radial insert ball bearing with sheet metal cages

① *Riveted cage*

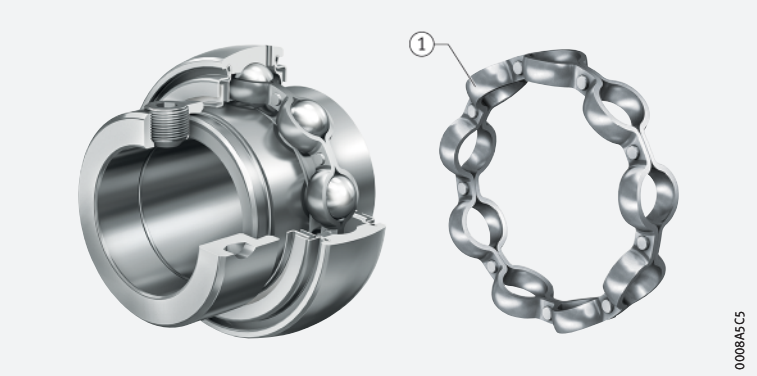

Solid cages made from polyamide PA66

Solid cages made from polyamide PA66 are produced using the injection moulding process ➤*1467*|*28* and ➤*1467*|*29*. As a result, cage types can generally be realised that allow designs with particularly high load carrying capacity. The elasticity and low mass of polyamide are favourable under shock type bearing loads, high accelerations and decelerations and tilting of the bearing rings in relation to each other. Polyamide cages have very good sliding and emergency running characteristics.

Cages made from glass fibre reinforced polyamide PA66 are suitable for continuous temperatures up to +120 °C. Due to the NBR seal used, the continuous temperature for the radial insert ball bearing is reduced ➤*1466*|*1.8*.

28
Solid polyamide cage for standard bearings

① *Polyamide cage*

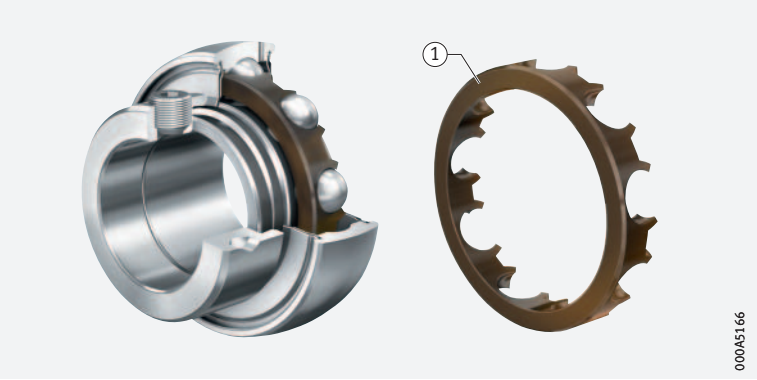

29
Solid polyamide cage for Black Series

① *Polyamide cage*

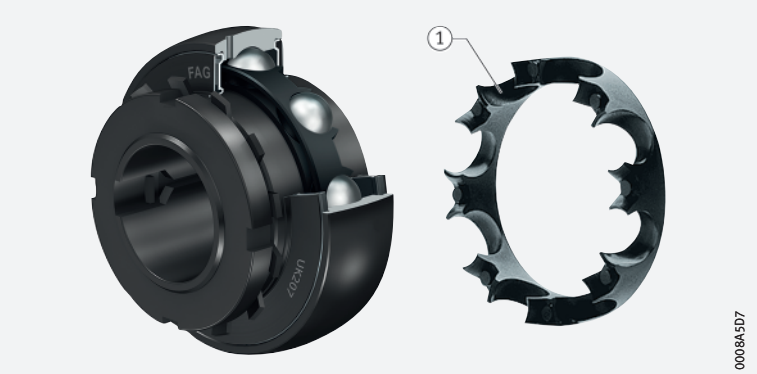

1.10 Internal clearance

The differentiation of radial insert ball bearings between the ISO range and JIS range (Black Series) must be taken into consideration for the radial internal clearance.

Radial internal clearance of radial insert ball bearings

The radial internal clearance of most series is Group 3 in accordance with ISO 5753-1 ➤*1454*| *3* and is thus larger than for normal deep groove ball bearings ➤*1468*| *8*. The radial internal clearance is subdivided into groups in accordance with ISO 5753-1 ➤*1468*| *30*.

The larger internal clearance allows better support of misalignments and shaft deflections.

30
Radial internal clearance

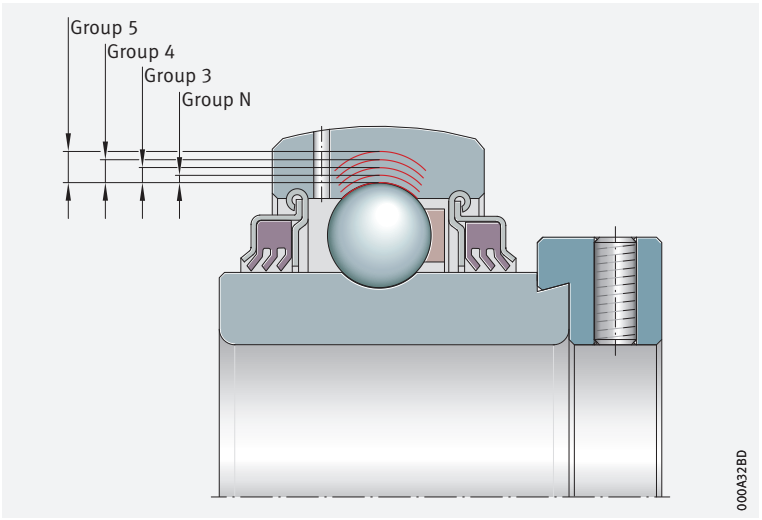

8
Radial internal clearance of radial insert ball bearings (excluding Black Series)

Bore d mm		Radial internal clearance							
		Group N µm		Group 3 µm		Group 4 µm		Group 5 µm	
over	incl.	min.	max.	min.	max.	min.	max.	min.	max.
2,5	6	2	13	8	23	–	–	–	–
6	10	2	13	8	23	14	29	20	37
10	18	3	18	11	25	18	33	25	45
18	24	5	20	13	28	20	36	28	48
24	30	5	20	13	28	23	41	30	53
30	40	6	20	15	33	28	46	40	64
40	50	6	23	18	36	30	51	45	73
50	65	8	28	23	43	38	61	55	90
65	80	10	30	25	51	46	71	65	105
80	100	12	36	30	58	53	84	75	120
100	120	15	41	36	66	61	97	90	140
120	140	18	48	41	81	71	114	105	160
140	160	18	53	46	91	81	130	120	180

Radial internal clearance of Black Series (radial insert ball bearings in accordance with JIS)

The radial internal clearance in accordance with JIS B 1520 is C3 for radial insert ball bearings UC and C4 for radial insert ball bearings UK. It is thus larger than in the case of normal deep groove ball bearings ➤ 1469 | 9.

The larger internal clearance allows better support of misalignments and shaft deflections.

9
Radial internal clearance of Black Series

Bore d		Ball set	Outside diameter D	Radial internal clearance			
				C3		C4	
mm	inch		mm	µm		µm	
				min.	max.	min.	max.
12	–	204	47	13	28	20	36
12,7	1/2						
14,288	9/16						
15	–						
15,875	5/8						
17	–						
17,462	11/16						
19,05	3/4						
20	–						
20,638	13/16	205	52	13	28	23	41
22,225	7/8						
23,812	15/16						
25	–						
25,4	1						
26,988	1 1/16	206	62				
28,575	1 1/8						
30	–						
30,162	1 3/16						
31,75	1 1/4						
31,75	1 1/4	207	72	15	33	28	46
33,338	1 5/16						
34,925	1 3/8						
35	–						
36,512	1 7/16						
38,1	1 1/2	208	80				
39,688	1 9/16						
40	–						
41,275	1 5/8	209	85	18	36	30	51
42,862	1 11/16						
44,45	1 3/4						
45	–						
46,038	1 13/16	210	90				
47,625	1 7/8						
49,212	1 15/16						
50	–						
50,8	2						

continued ▼



9
Radial internal clearance of Black Series

Bore d		Ball set	Outside diameter D	Radial internal clearance			
				C3		C4	
mm	inch		mm	µm		µm	
				min.	max.	min.	max.
50,8	2	211	100	23	43	38	61
52,388	$2^{1}/_{16}$						
53,975	$2^{1}/_{8}$						
55	–						
55,562	$2^{3}/_{16}$						
57,15	$2^{1}/_{4}$	212	110				
58,738	$2^{5}/_{16}$						
60	–						
60,325	$2^{3}/_{8}$						
61,912	$2^{7}/_{16}$						
63,5	$2^{1}/_{2}$	213	120				
65	–						
65,09	$2^{9}/_{16}$						
66,675	$2^{5}/_{8}$	214	125	25	51	46	71
68,262	$2^{11}/_{16}$						
69,85	$2^{3}/_{4}$						
70	–						
71,438	$2^{13}/_{16}$	215	130				
73,025	$2^{7}/_{8}$						
74,612	$2^{15}/_{16}$						
75	–						
76,2	3						
77,787	$3^{1}/_{16}$	216	140				
79,375	$3^{1}/_{8}$						
80	–						
80,962	$3^{3}/_{16}$						
82,55	$3^{1}/_{4}$	217	150	30	58	53	84
84,137	$3^{5}/_{16}$						
85	–						
87,312	$3^{7}/_{16}$						
88,9	$3^{1}/_{2}$	218	160				
90	–						
93,662	$3^{11}/_{16}$	219	170				
95	–						
100	–	220	180				
100,012	$3^{15}/_{16}$						
101,6	4						

continued ▲

1.11 Dimensions, tolerances

The main dimensions of the standard bearings and corrosion-resistant radial insert ball bearings correspond to ISO 9628 and DIN 626-1 ➤1496.

The main dimensions of the Black Series correspond to JIS B 1558 ➤1546.

The limiting dimensions for chamfer dimensions correspond to DIN 620-6. Overview and limit values ➤137.

31
Symmetrical ring cross-section with identical chamfer dimensions on both rings

d = *inside diameter*
r_1, r_2 = *chamfer dimensions*
① *Arc (radius with nominal chamfer dimension) beyond which material must not protrude*
② *Radial*
③ *Axial*

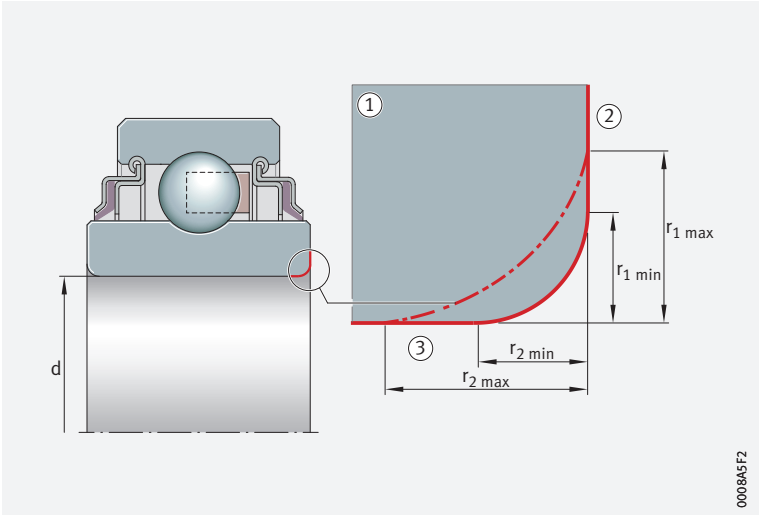

Normal tolerances of standard bearings

The outside diameter of the bearings corresponds to tolerance class Normal in accordance with ISO 492 ➤1471 10. The inner ring bore has a plus tolerance to facilitate mounting of the bearing.

10
Tolerances of radial insert ball bearings

Tolerance symbols in accordance with ISO 492 ➤117 6
U = *upper limit deviation*
L = *lower limit deviation*

Inner ring				Outer ring			
Nominal dimension Bore d mm		Deviation $t_{\Delta dmp}$ µm		Nominal dimension Outside diameter D mm		Deviation[1)2)] $t_{\Delta Dmp}$ µm	
over	incl.	L	U	over	incl.	U	L
12	18	0	+18	30	50	0	−11
18	24	0	+18	50	80	0	−13
24	30	0	+18	80	120	0	−15
30	40	0	+18	120	150	0	−18
40	50	0	+18	150	180	0	−25
50	60	0	+18	180	250	0	−30
60	90	0	+25	–	–	–	–
90	120	0	+30	–	–	–	–

1) In the case of sealed bearings, the largest and smallest values of the outside diameter can deviate from the mean value by approximately 0,03 mm.
2) Outside diameter tolerances also valid for 2..-KRR and 2..-NPP-B.

Standard tolerances of corrosion-resistant radial insert ball bearings

The outside diameter of the bearings corresponds to tolerance class Normal in accordance with ISO 492 ➤1472|▦11 and ➤1472|▦12. The inner ring bore has a plus tolerance to facilitate mounting of the bearing.

▦11
Tolerances of radial insert ball bearings, with Corrotect coating

Tolerance symbols in accordance with ISO 492 ➤117|▦6
U = *upper limit deviation*
L = *lower limit deviation*

Inner ring				Outer ring			
Nominal dimension Bore d mm		Deviation $t_{\Delta dmp}$ µm		Nominal dimension Outside diameter D mm		Deviation[1] $t_{\Delta Dmp}$ µm	
over	incl.	L	U	over	incl.	U	L
12	18	0	+18	30	50	0	–11
18	24	0	+18	50	80	0	–13
24	30	0	+18	80	120	0	–15
30	40	0	+18	120	150	0	–18
40	50	0	+18	150	180	0	–25
50	60	0	+18	180	250	0	–30
60	90	0	+25	–	–	–	–
90	120	0	+30	–	–	–	–

1) In the case of sealed bearings, the largest and smallest values of the outside diameter can deviate from the mean value by approx. 0,03 mm.

▦12
Tolerances of radial insert ball bearings, corrosion-resistant VA design

Tolerance symbols in accordance with ISO 492 ➤117|▦6
U = *upper limit deviation*
L = *lower limit deviation*

Inner ring				Outer ring			
Nominal dimension Bore d mm		Deviation $t_{\Delta dmp}$ µm		Nominal dimension Outside diameter D mm		Deviation[1] $t_{\Delta Dmp}$ µm	
over	incl.	L	U	over	incl.	U	L
18	24	0	+25	50	80	0	–13
24	30	0	+25	80	120	0	–13
30	40	0	+25	120	150	0	–13
40	50	0	+25	150	180	0	–13
50	60	0	+25	180	250	0	–13

1) In the case of sealed bearings, the largest and smallest values of the outside diameter can deviate from the mean value by approx. 0,03 mm.

Normal tolerances of Black Series (radial insert ball bearings in accordance with JIS)

The outside diameter tolerances of the bearings correspond to the tolerances in accordance with JIS B 1558 ➤1472|▦13. The inner ring bore has a plus tolerance to facilitate mounting of the bearing.

▦13
Tolerances of inner ring, Black Series

Nominal bearing bore diameter d mm		Deviation[1] Δ_{dmp} µm		Width deviation Δ_{Bs} µm	
over	incl.	min.	max.	min.	max.
10	18	0	+15	–120	0
18	31,75	0	+18	–120	0
31,75	50,8	0	+21	–120	0
50,8	80,962	0	+24	–150	0
80,962	120	0	+28	–200	0

1) This corresponds to the arithmetic mean value derived from the largest and smallest diameters (measured using a two-point measuring device).

14 *Tolerances of outer ring, Black Series*

Nominal outside diameter D_{sp} mm		Deviation[1] Δ_{Dm} µm	
over	incl.	min.	max.
30	50	–11	0
50	80	–13	0
80	120	–15	0
120	150	–18	0
150	180	–25	0
180	250	–30	0

1) In the case of sealed bearings, the largest and smallest values of the outside diameter can deviate from the mean value by approx. 0,03 mm.

1.12 Suffixes

Suffixes describe the design and features of a bearing in more detail.

15 *Suffixes and corresponding descriptions*

Suffix	Description	
AS2/V	Bearing outer ring with two lubrication holes in two offset planes (instead of one plane)	Standard
B	Bearing with spherical outside surface of outer ring	
2C	Flinger shield on both sides	
FA	Manufacturing variant	Standard
FA101	High and low temperature design –40 °C to +180 °C	
FA106	Bearing subjected to special noise testing	
FA107	Bearing with lubrication holes on the locating side	
FA125	With Corrotect coating, corrosion-resistant	
FA164	High temperature design from +150 °C to +250 °C	
KRR	Lip seal on both sides (seal R)	Standard
KLL	Labyrinth seal on both sides (seal L)	
KTT	Triple lip seal on both sides (seal T)	
NPP	Lip seal on both sides (seal P)	
2RSR	Lip seal on both sides (vulcanised)	
AH	Features differing from the original	Standard
NR	Slot and snap ring for radial insert ball bearing with cylindrical outer ring	
OSE	Bearing without locking element (eccentric locking collar)	
XL	Bearing design in X-life quality	



16 *Suffixes and corresponding descriptions, additional notations for (self-aligning) deep groove ball bearings*

Suffix	Description	
L402/70	Grease code according to Schaeffler standard, 70% grease quantity	Available by agreement
GA47/70	Grease Group, 70% grease quantity	

1.13 Structure of bearing designation

With ***medias*** interchange, equivalent Schaeffler bearing designations can be determined for bearing designations from other rolling bearing manufacturers *https://www.schaeffler.de/std/1B69*.

The designations of radial insert ball bearings with an extended inner ring and (self-aligning) deep groove ball bearings follow an almost identical model ➤*1474*|▦*17*, ➤*1475*|⧉*32* and ➤*1475*|⧉*33*.
Radial insert ball bearings with a steel aligning ring or rubber interliner differ from this model ➤*1475*, which is also the case for Black Series and corrosion-resistant radial insert ball bearings ➤*1476*.

▦17
Basic designations and corresponding descriptions for radial insert ball bearings with extended inner ring or (self-aligning) deep groove ball bearings

➤⧉32 ➤⧉33	Basic designation	Description of basic designation	
		Stated in designation	Not stated
①	G	Relubrication facility	Without relubrication facility
②	N	Heavy bearing series (bearing series 63)	Standard bearing series (bearing series 62)
	RA	Location of inner ring by means of eccentric locking collar, with inner ring extended on one side	
	AY	Location of inner ring by means of two grub screws, with inner ring extended on one side	
	SH	Location of inner ring by means of adapter sleeve (special ball set)	
② + ③	RAL	Location of inner ring by means of eccentric locking collar, light bearing series (bearing series 60)	
	VK	Inner ring with square bore	Inner ring with a cylindrical bore
	SK	Inner ring with hexagonal bore	
③	Y	Location of inner ring by means of two grub screws, with inner ring extended on both sides	Location of inner ring by means of eccentric locking collar, with inner ring extended on both sides
	L	Inner ring with drive slot (non-locating bearing)	
④	E	Metric bore	Inch size bore
	1	Inch size bore (only for inner ring extended on both sides)	
⑤	50	Bore code; bore diameter in mm (example: 50 = 50 mm)	–
	012[1)]	Bore code; bore diameter in inches (example: 012 = $^3/_4$ inch)	–
⑤ + ⑥	204[2)]	Ball set code (sole notation for (self-aligning) deep groove ball bearings; inner ring with fit)	–
⑥	214	Ball set 214 (additional notation)	Standard (ball set 213)

1) *Three-digit notation for bore diameter. The first digit is complete inches, while the last two digits are stated in sixteenths, for example $^{12}/_{16}$.*

2) *The first digit of the ball set code corresponds to the standardised series designation for radial deep groove ball bearings without the leading 6, for example bearing series 62. The other digits represent the bore code, for example 04. For all rolling bearings in the range from d = 20 mm to d = 480 mm, the bore code is created by dividing the dimension of the bearing bore by 5.*

32
Radial insert ball bearing with extended inner ring: designation structure

① – ⑥ *Basic designation* ➤*1474*|▦*17*
⑦ – ⑬ *Suffixes* ➤*1473*|▦*15*

Example:
GE80-XL-KRR-B-AH01-FA164

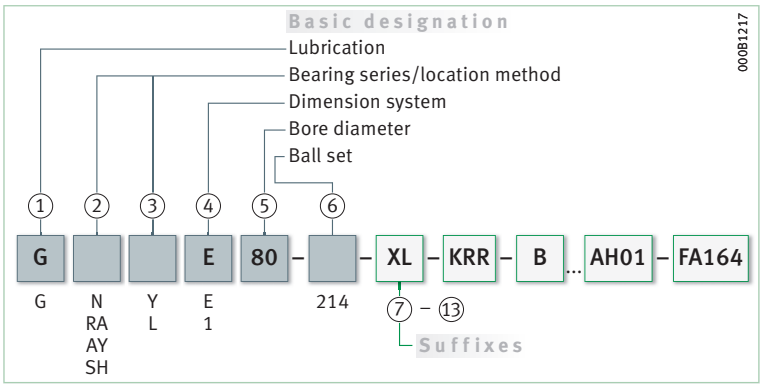

33
(Self-aligning) deep groove ball bearing: designation structure

① – ⑥ *Basic designation* ➤*1474*|▦*17*
⑦ – ⑫ *Suffixes* ➤*1473*|▦*15 and* ➤*1473*|▦*16*

Example:
GVKE16-205-KRR-B-2C-AS2/V-L402/70-AH01

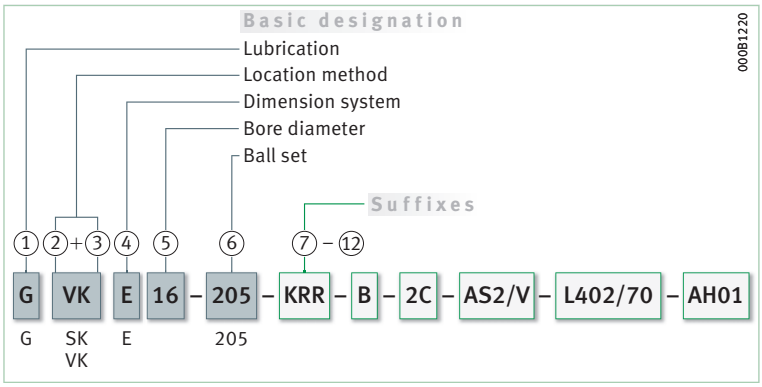

Radial insert ball bearings with steel aligning ring or rubber interliner

Radial insert ball bearings with a steel aligning ring or rubber interliner follow a separate designation model ➤*1475*|▦*18* and ➤*1475*|▦*19*.

18
Basic designations and corresponding descriptions for radial insert ball bearings with steel aligning ring

➤*34*	Basic designation	Description of basic designation
①	B	Self-aligning deep groove ball bearing
	P	Radial insert ball bearing with eccentric locking collar
②	E	Aligning ring

19
Basic designations and corresponding descriptions for radial insert ball bearings with rubber interliner

➤*35*	Basic designation	Description of basic designation
①	CR	Rubber interliner with locating shoulder
	RABR	Rubber interliner with spherical outside surface
	RCR	Rubber interliner with cylindrical outside surface and mounting chamfer
	RCSM	Rubber interliner with cylindrical outside surface
②	B	Radial insert ball bearing RAE..-NPP-B ➤*1474*|▦*17*
	A	Radial insert ball bearing RALE..-NPP-B ➤*1474*|▦*17*

34
Radial insert ball bearing with steel aligning ring: designation structure

① – ② *Basic designation* ➤*1475*|▦*18*
③ *Diameter in mm*
④ *Suffixes* ➤*1473*|▦*15*

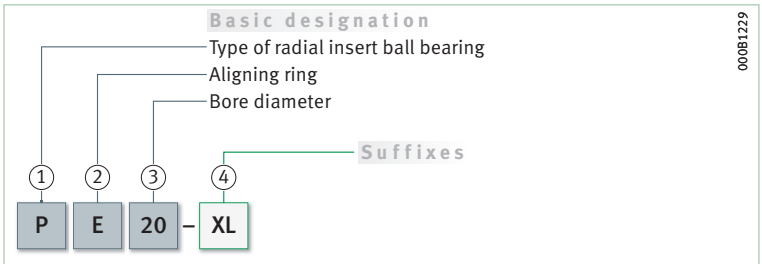

35
Radial insert ball bearing with rubber interliner: designation structure

① – ② *Basic designation* ➤*1475*|▦*19*
③ *Diameter in mm*
④ *Suffixes* ➤*1473*|▦*15*

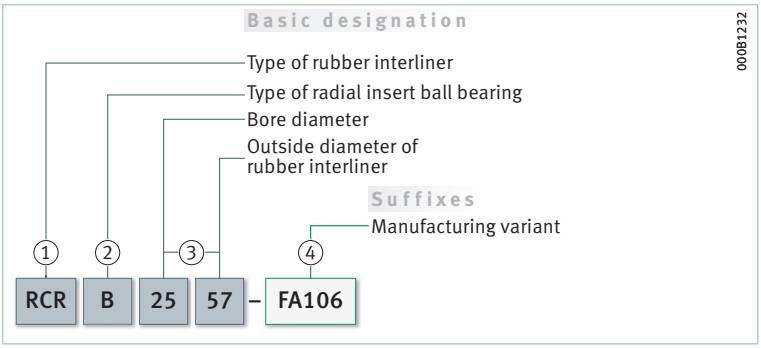

Black Series and corrosion-resistant radial insert ball bearings

Radial insert ball bearings in accordance with JIS (Black Series) and corrosion-resistant radial insert ball bearings follow a separate designation model ➤*1476*|▦*20*.

20
Basic designations and corresponding descriptions for Black Series and corrosion-resistant radial insert ball bearings

Basic designation	Description of basic designation	
	Stated in designation	Not stated
S	High grade steel design of radial insert ball bearing	Normal design (for Black Series)
UB	Inner ring extended on one side, with grub screws	–
UC	Inner ring extended on both sides, with grub screws and flinger shields on both sides	
UG	Inner ring extended on one side, with eccentric locking collar	
UK	With adapter sleeve in accordance with JIS B 1552 and flinger shields on both sides	
208[1)]	Ball set code, metric dimensions	
208-24[2)]	Ball set code, bore diameter in inch dimensions	

1) The first digit of the ball set code corresponds to the standardised series designation for radial deep groove ball bearings without the leading 6, for example bearing series 62.
The other digits represent the bore code, for example 08. For all rolling bearings in the range from d = 20 mm to d = 480 mm, the bore code is created by dividing the dimension of the bearing bore by 5.

2) Notation for bore diameter in sixteenths, for example $^{24}/_{16} = 1^{1}/_{2}$ inch.

36
Black Series and corrosion-resistant radial insert ball bearings: designation structure

Basic designation ➤*1476*|▦*20*

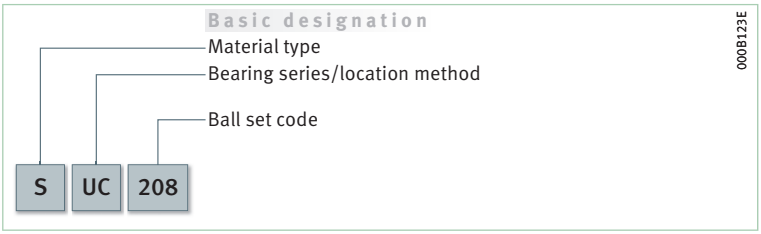

1.14 Dimensioning

Equivalent dynamic bearing load

✎ *$P = F_r$ under purely radial load of constant magnitude and direction*

✎ *P is a substitute force for combined load and various load cases*

The basic rating life equation $L = (C_r/P)^p$ used in the dimensioning of bearings under dynamic load assumes a load of constant magnitude and direction. In radial bearings, this is a purely radial load F_r. If this condition is met, the bearing load F_r is used in the rating life equation for P ($P = F_r$).
If this condition is not met, a constant radial force must first be determined for the rating life calculation that (in relation to the rating life) represents an equivalent load. This force is known as the equivalent dynamic bearing load P.

✎ $F_a/F_r \leqq e$ or $F_a/F_r > e$

The calculation of P is dependent on the load ratio F_a/F_r and the calculation factor e ➤1477| 1 and ➤1477| 2.

1
Equivalent dynamic load

$$\frac{F_a}{F_r} \leqq e \quad \Rightarrow \quad P = F_r$$

2
Equivalent dynamic load

$$\frac{F_a}{F_r} > e \quad \Rightarrow \quad P = X \cdot F_r + Y \cdot F_a$$

Legend

P	N	Equivalent dynamic bearing load
F_r	N	Radial load
F_a	N	Axial load
e, X, Y	–	Factors ➤1477| 21.

The specified values are valid for normal operating clearance ➤1477| 21.

If the operating clearance differs significantly, the use of BEARINX is recommended for calculation of the rating life. If the calculation values lie between the stated values (such as 0,4), then read off the table values for 0,3 and 0,5 and determine the intermediate values using linear interpolation.

For normal operating clearance, see Recommended fits ➤148.

21
Factors e, X and Y

$\frac{f_0 \cdot F_a}{C_{0r}}$	Factor (for normal operating clearance)		
	e	X	Y
0,3	0,22	0,56	2
0,5	0,24	0,56	1,8
0,9	0,28	0,56	1,58
1,6	0,32	0,56	1,4
3	0,36	0,56	1,2
6	0,43	0,56	1

Legend

C_{0r}	N	Basic static load rating ➤236|
f_0	–	Factor ➤236|
F_a	N	Axial load.

22
Factor f_0

Bore code	Factor f_0		
	60	62	63
3	–	12,9	–
4	–	12,2	12,4
5	–	13,2	12,2
6	–	13	–
7	13	12,4	–
8	12,4	13	–
9	13	12,4	–
00	12,4	12,1	11,3
01	13	12,3	11,1
02	13,9	13,1	12,1
03	14,3	13,1	12,3
04	13,9	13,1	12,4
05	14,5	13,8	12,4
06	14,8	13,8	13
07	14,8	13,8	13,1

continued ▼

22
Factor f_0

Bore code	Factor f_0		
	60	62	63
08	15,3	14	13
09	15,4	14,3	13
10	15,6	14,3	13
11	15,4	14,3	12,9
12	15,5	14,3	13,1
13	15,7	14,3	13,2
14	15,5	14,4	13,2
15	15,7	14,7	13,2
16	15,6	14,6	13,2
17	15,7	14,7	13,1
18	15,6	14,5	13,9
19	15,7	14,4	13,9
20	15,9	14,4	13,8
21	15,8	14,3	13,8
22	15,6	14,3	13,8
24	15,9	14,8	13,5
26	15,8	14,5	13,6
28	16	14,8	13,6
30	16	15,2	13,7

continued ▲▼

22
Factor f_0

Bore code	Factor f_0		
	60	62	63
32	16	15,2	13,9
34	15,7	15,3	13,9
36	15,6	15,3	13,9
38	15,8	15	14
40	15,6	15,3	14,1
44	15,6	15,2	14,1
48	15,8	15,2	14,2
52	15,7	15,2	–
56	15,9	15,3	–
60	15,7	–	–
64	15,9	–	–
68	15,8	–	–
72	15,9	–	–
76	–	–	–
80	–	–	–
84	–	–	–
88	–	–	–
92	–	–	–
96	–	–	–

continued ▲

Equivalent static bearing load

Radial insert ball bearings are based on single row deep groove ball bearings 60, 62 or 63.

✎ *$F_{0a}/F_{0r} \leqq 0,8$ or $F_{0a}/F_{0r} > 0,8$*

For deep groove ball bearings under static loading ➤*1479*| *3* and ➤*1479*| *4*. The calculation of P_0 is dependent on the load ratio F_{0a}/F_{0r} and the factor 0,8.

*f*3
Equivalent static load

$$\frac{F_{0a}}{F_{0r}} \leqq 0{,}8 \quad \Rightarrow \quad P_0 = F_{0r}$$

*f*4
Equivalent static load

$$\frac{F_{0a}}{F_{0r}} > 0{,}8 \quad \Rightarrow \quad P_0 = 0{,}6 \cdot F_{0r} + 0{,}5 \cdot F_{0a}$$

Legend

P_0	N	Equivalent static bearing load
F_{0r}, F_{0a}	N	Largest radial or axial load present (maximum load).

Static load safety factor

✎ $S_0 = C_0/P_0$

In addition to the basic rating life L (L_{10h}), it is also always necessary to check the static load safety factor S_0 ➤ *1479* | *f*5.

*f*5
Static load safety factor

$$S_0 = \frac{C_0}{P_0}$$

Legend

S_0	–	Static load safety factor
C_0	N	Basic static load rating
P_0	N	Equivalent static bearing load.

1.15 Minimum load

✎ *Rolling bearings under low loads are particularly prone to slippage*

If the lubricant film between the rolling elements and raceways is broken as a result of slippage, the contact partners will be in contact at a very high relative velocity and there will be an erratic increase in wear in the bearing. The risk of slippage is particularly high in the case of bearings under low loads.

✎ *Minimum radial load*

In order to ensure slippage-free operation, the bearings must be subjected to a minimum radial load. This applies particularly in the case of high speeds and high accelerations. In continuous operation, ball bearings with cage must therefore be subjected to a minimum radial load of the order of $P \geqq 0{,}01 \cdot C_r$.

1.16 Design of bearing arrangements

Shaft tolerances for radial insert ball bearings

The permissible shaft tolerance is dependent on the speed and load. Shafts up to tolerance class h9 Ⓔ can be used.

Drawn shafts will suffice for most applications.

Roughness of cylindrical bearing seating surfaces

✎ *Ra must not be too high*

The roughness of the bearing seats must be matched to the tolerance class of the bearings. The mean roughness value Ra must not be too high, in order to maintain the interference loss within limits. The shafts must be ground, while the bores must be precision turned. The roughness values stated as a function of the IT grade of the bearing seating surfaces are guide values ➤ *1479* | ▦ *23*.

▦23
Roughness values for cylindrical bearing seating surfaces – guide values

Nominal diameter of bearing seat d (D) mm		Recommended mean roughness value for ground bearing seats Ramax µm Diameter tolerance (IT grade)			
over	incl.	IT7	IT6	IT5	IT4
–	80	1,6	0,8	0,4	0,2
80	500	1,6	1,6	0,8	0,4

Suitable housing units for radial insert ball bearings

For radial insert ball bearings, Schaeffler offers the appropriate plummer block, flanged and take-up housings made from cast iron, sheet steel and plastic. The housings can, like the radial insert ball bearings themselves, also be provided in a corrosion-resistant design ➤ *1486*|▦ *26*.
Cast iron housings are always one-piece units and can support high loads. Sheet steel housings are two-piece units and are used where the priority is not the load carrying capacity of the housing but the low mass of the unit.

37
Plummer block housing unit

Cast iron housing with integrated radial insert ball bearing

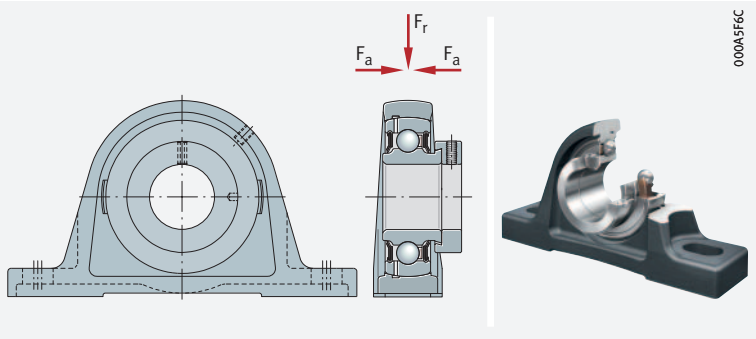

38
Flanged housing unit

Sheet steel housing with integrated radial insert ball bearing

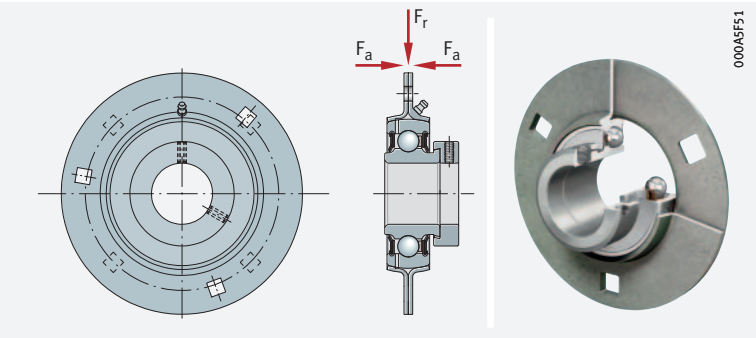

✎ Ready-to-fit units eliminate the need for in-house production of the mounting environment for the bearings

The housing units comprise radial insert ball bearings with a spherical outer ring and a housing with a spherical bore to form ready-to-fit units. The user is thus spared the need for costly production of the mounting environment required for these bearings. The areas of application correspond to those of the radial insert ball bearings.

39
Example of the location of radial insert ball bearings with four-bolt flanged housing units PCJ in a pallet transport system

Design of shaft to tolerance class h9 Ⓔ

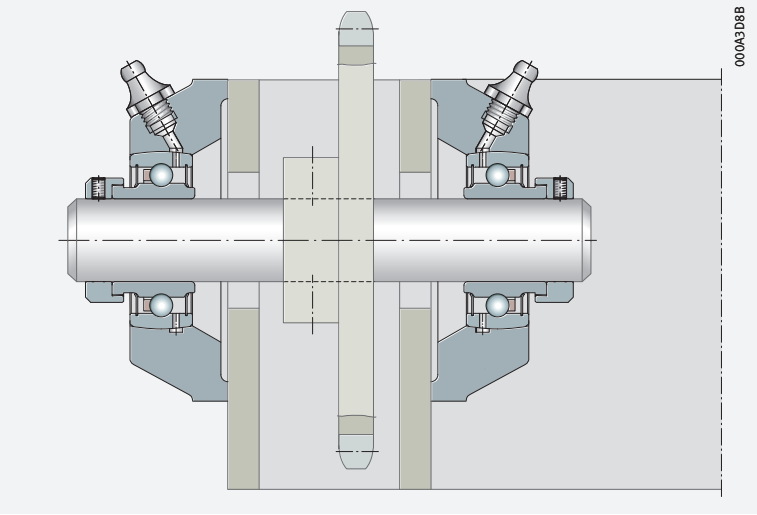

Roller chain idler sprocket units and idler pulley units

Roller chain idler sprocket units and idler pulley units are tensioning elements for return units or belt drives ➤*1481*|*40*. Roller chain idler sprocket units can compensate for chain stretch resulting from operation and give smoother system running under high loads and velocities. Idler pulley units increase the wrap angle in belt drives and can therefore transmit higher power levels.

40
Roller chain idler sprocket units and idler pulley units from Schaeffler

① *Roller chain idler sprocket unit KSR..-L0 made from steel*
② *Roller chain idler sprocket unit KSR..-L0-22 made from plastic*
③ *Idler pulley unit RSRA..-L0 for vee belts in accordance with DIN 2215 and ISO 1081*

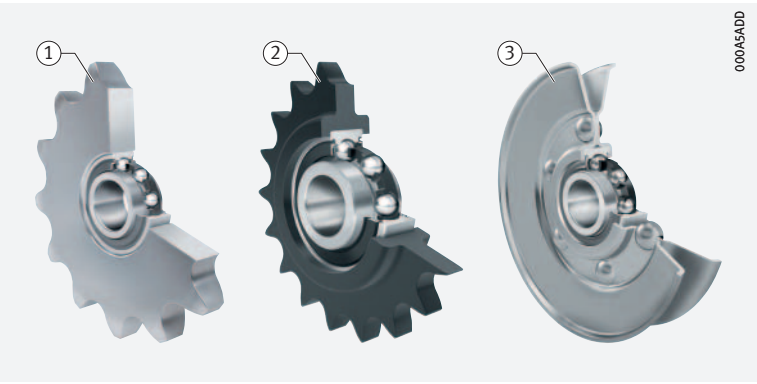

Overview of possible combinations

The following overviews represent the possible combinations of radial insert ball bearings with housings from Schaeffler:

- standard cast iron housings, ISO range ➤*1482*|*24*
- standard sheet steel housings, ISO range ➤*1484*|*25*
- corrosion-resistant cast iron and sheet steel housings ➤*1486*|*26*
- corrosion-resistant plastic housings ➤*1488*|*27*
- Black Series, cast iron housings, JIS range ➤*1490*|*28*

Product tables and descriptions of the catalogue range of housing units as well as roller chain idler sprocket units and idler pulley units:

- Catalogue Radial Insert Ball Bearings and Housing Units SG 1
- Download and ordering *https://www.schaeffler.de/std/1D60*

24 *Possible combinations of radial insert ball bearings with cast iron housings*

Radial insert ball bearing	Standard cast iron housing				
	Plummer block housing		Two-bolt flanged housing		Three-bolt flanged housing
	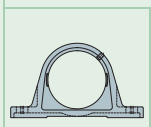	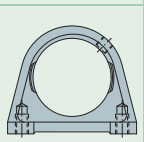	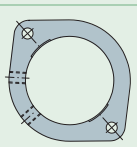	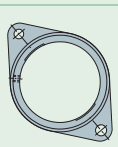	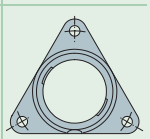
Designation	**ASE**	**SHE**	**LCTE**[1]	**CJT**	**CFTR**
Shaft diameter d	**SAO**[2]		**GLCTE**	**CFT**	
				CJTZ	
RAE..-XL-NPP-B 12 mm –50 mm 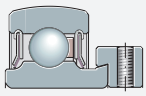			**FLCTE..-XL**[1]		
GRAE..-XL-NPP-B 12 mm – 60 mm 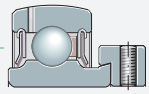	**PASE..-XL**	**PSHE..-XL**	**GLCTE..-XL**	**PC(J, F)T..-XL**	**PCFTR..-XL**
GRA..-NPP-B-AS2/V $5/8''$ – $1\,15/16''$	Available by agreement	Available by agreement	Available by agreement	Available by agreement	Available by agreement
GE..-XL-KRR-B 17 mm – 120 mm 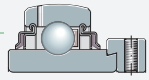	**RASE..-XL**	**RSHE..-XL**		**RCJT(Z)..-XL**	Available by agreement
G..-KRR-B-AS2/V $5/8''$ – $2\,15/16''$	Available by agreement	Available by agreement		Available by agreement	
GE..-XL-KTT-B 20 mm – 80 mm 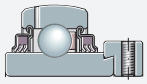	**TASE..-XL**	**TSHE..-XL**		**TCJT..-XL**	Available by agreement
GE..-XL-KLL-B 20 mm – 50 mm 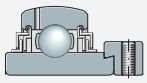	**LASE..-XL**	Available by agreement		**LCJT..-XL**	Available by agreement
GNE..-XL-KRR-B[2] 30 mm – 100 mm 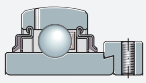	**RSAO..-XL**				
GLE..-XL-KRR-B 20 mm – 70 mm 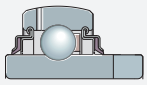	**RASEL..-XL**	Available by agreement		Available by agreement	Available by agreement
GSH..-XL-2RSR-B 20 mm – 50 mm 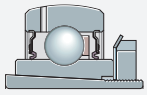	**RASEA..-XL**	Available by agreement		**RCJTA..-XL**	Available by agreement
AY..-XL-NPP-B 12 mm – 30 mm 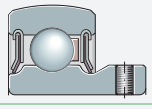			**FLCTEY..-XL**[1]		
GAY..-XL-NPP-B 12 mm – 60 mm 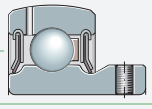	**PASEY..-XL**	**PSHEY..-XL**	**FLCTEY..-XL**[1]	**PCJTY..-XL**	Available by agreement
GAY..-NPP-B(-AS2/V) $1/2''$ – $1\,7/16''$	Available by agreement	Available by agreement	Available by agreement	Available by agreement	
GYE..-XL-KRR-B 12 mm – 90 mm 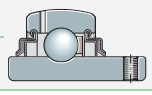	**RASEY..-XL**	**RSHEY..-XL**		**RCJTY..-XL**	Available by agreement
GY..-KRR-B-AS2/V $1/2''$ – $2\,15/16''$	Available by agreement	Available by agreement		Available by agreement	

Catalogue range; other dimensions and combinations available by agreement.

Combinations not possible or not advisable.

Further information: SG 1
https://www.schaeffler.de/std/1D60
Housing selection wizard:
https://www.schaeffler.de/std/1D61

1) *Without lubrication hole.*
2) *Heavy series.*

Four-bolt flanged housing		Take-up housing			
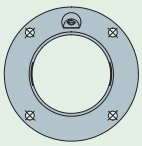	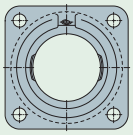	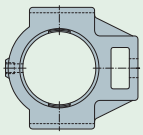	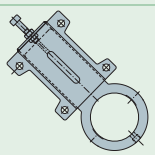	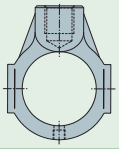	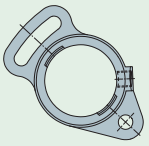
ME	**CJ**	**TUE**	**HUE** **GEH..-HUSE**	**HE**	**SFT**
MEO[2]	**CJO**[2]	**TUEO**[2]			
FE	**CF**				
PME..-XL	**PCJ..-XL**, **PCF..-XL**	**PTUE..-XL**	**PHUSE..-XL**	**PHE..-XL**	**PSFT..-XL**
Available by agreement	Available by agreement	Available by agreement	Available by agreement	Available by agreement	Available by agreement
RME..-XL, **RFE..-XL**	**RCJ..-XL**	**RTUE..-XL**	Available by agreement	**RHE..-XL**	Available by agreement
Available by agreement	Available by agreement	Available by agreement	Available by agreement	Available by agreement	Available by agreement
TME..-XL	**TCJ..-XL**	**TTUE..-XL**	Available by agreement	**THE..-XL**	Available by agreement
TFE..-XL					
Available by agreement	Available by agreement	Available by agreement	Available by agreement	Available by agreement	Available by agreement
RMEO..-XL	**RCJO..-XL**	**RTUEO..-XL**			
Available by agreement	**RCJL..-XL**	Available by agreement	Available by agreement	Available by agreement	Available by agreement
Available by agreement	Available by agreement	Available by agreement	Available by agreement	Available by agreement	Available by agreement
PMEY..-XL	**PCJY..-XL**	**PTUEY..-XL**	Available by agreement	**PHEY..-XL**	Available by agreement
Available by agreement	Available by agreement	Available by agreement		Available by agreement	
RMEY..-XL	**RCJY..-XL**	**RTUEY..-XL**	Available by agreement	Available by agreement	Available by agreement
Available by agreement	Available by agreement	Available by agreement			

25 *Possible combinations of radial insert ball bearings with sheet steel housings*

Radial insert ball bearing	Standard sheet steel housing[1]				
	Plummer block housing			Two-bolt flanged housing	
	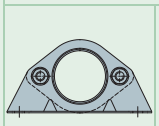	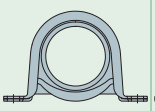	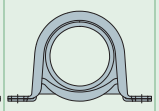	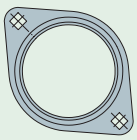	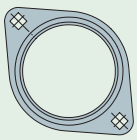
Designation Shaft diameter d	**GEH..-PBS**	**GEH..-BT**	**GEH..-BT** **GRG..-RABR**	**FLAN..-LST** (2 pieces)	**FLAN..-MST** (2 pieces)
RALE..-XL-NPP(-B) 20 mm – 30 mm 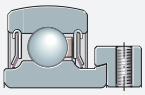			**RPB..-XL** d = 30 mm	**RALT..-XL**	
RAE..-XL-NPP(-B) 12 mm – 40 mm 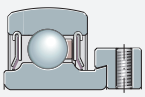	**PBS..-XL**	**PB..-XL**	**RPB..-XL**		**RAT..-XL**
GRAE..-XL-NPP-B 20 mm – 60 mm 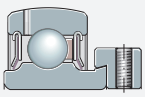					
(G)E..-XL-KRR-B 17 mm – 60 mm 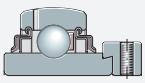	To be ordered separately	To be ordered separately	To be ordered separately		To be ordered separately
GE..-XL-KTT-B 20 mm – 60 mm 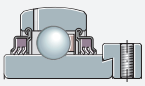	To be ordered separately	To be ordered separately			To be ordered separately
GE..-XL-KLL-B 20 mm – 50 mm 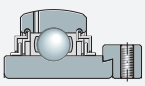	To be ordered separately	To be ordered separately			To be ordered separately
GLE..-XL-KRR-B 20 mm – 60 mm 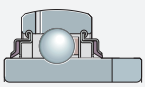	To be ordered separately	To be ordered separately			To be ordered separately
GSH..-XL-2RSR-B 20 mm – 50 mm 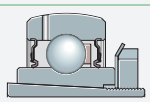	To be ordered separately	To be ordered separately			To be ordered separately
(G)AY..-XL-NPP-B 12 mm – 60 mm 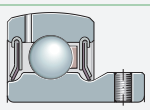	To be ordered separately	**PBY..-XL**			**RATY..-XL**
GYE..-XL-KRR-B 12 mm – 60 mm 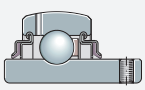	To be ordered separately	To be ordered separately			To be ordered separately

Catalogue range; other dimensions and combinations available by agreement.

Combinations not possible or not advisable.

Further information: SG 1
https://www.schaeffler.de/std/1D60
Housing selection wizard:
https://www.schaeffler.de/std/1D61

[1] *Housings have a Corrotect coating, suffix FA125.*

			Three-bolt flanged housing				Take-up housing
	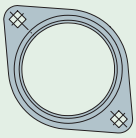	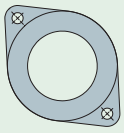	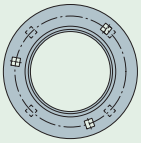	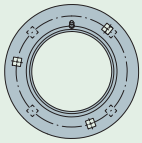	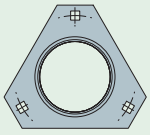	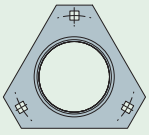	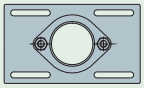
	FLAN..-CSLT **FLAN..-CST**	**FLAN..-RCSMF** **GRG..-RCSM**	**FLAN..-MSB** (2 pieces)	**FLAN..-MSA** **FLAN..-MSB**	**FLAN..-LSTR** (2 pieces)	**FLAN..-MSTR** (2 pieces)	**GEH..-MSTU**
	PCSLT..-XL	**RCSMF..-XL** d = 30 mm			**RALTR..-XL**		
		RCSMF..-XL	**RA..-XL**			**RATR..-XL**	**MSTU..-XL**
			RA..-XL	**GRA..-XL**			
			To be ordered separately	To be ordered separately		**RRTR..-XL**	To be ordered separately
			To be ordered separately	To be ordered separately		To be ordered separately	To be ordered separately
			To be ordered separately	To be ordered separately		To be ordered separately	To be ordered separately
			To be ordered separately	To be ordered separately		To be ordered separately	To be ordered separately
			To be ordered separately	To be ordered separately		To be ordered separately	To be ordered separately
			RAY..-XL			**RATRY..-XL**	To be ordered separately
						To be ordered separately	To be ordered separately

26
Possible combinations of radial insert ball bearings with cast iron or sheet steel housings, corrosion-resistant

Radial insert ball bearing[1]	Cast iron housing[1]
	Plummer block housing
Designation Shaft diameter d	**ASE**
GRAE..-XL-NPP-B-FA125 20 mm – 60 mm	**PASE..-XL-N-FA125**
GE..-XL-KRR-B-FA125 20 mm – 50 mm	**RASE..-XL-N-FA125**
SUC 12 mm – 30 mm	Available by agreement

Catalogue range; other dimensions and combinations available by agreement.
Further information: SG 1 *https://www.schaeffler.de/std/1D60*
Housing selection wizard: *https://www.schaeffler.de/std/1D61*

[1] With Corrotect coating.

			Sheet steel housing[1)]	
	Two-bolt flanged housing	Four-bolt flanged housing	Three-bolt flanged housing	
	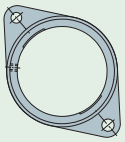	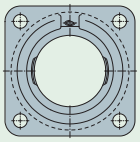	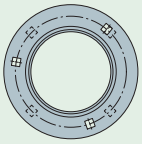	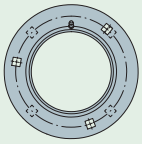
	CJT	**CJ**	**FLAN..-MSB-VA** (2 pieces)	**FLAN..-MSA-VA** **FLAN..-MSB-VA**
	PCJT..-XL-N-FA125	**PCJ..-XL-N-FA125**	Available by agreement	Available by agreement
	RCJT..-XL-N-FA125	**RCJ..-XL-N-FA125**	Available by agreement	Available by agreement
	Available by agreement	Available by agreement	**RRY..-VA**	**GRRY..-VA**

27
Possible combinations of radial insert ball bearings with plastic housings

Radial insert ball bearing		Plastic housing	
		Plummer block housing	
		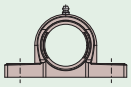	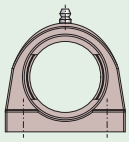
Designation Shaft diameter d		**GEHPP**	**GEHPPA**
SUB 20 mm – 50 mm	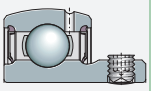	**SUBPP**	**SUBPPA**
SUC 20 mm – 50 mm	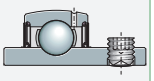	**SUCPP**	**SUCPPA**
SUG 20 mm – 50 mm	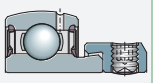	**SUGPP**	**SUGPPA**
GRAE..-XL-NPP-B-FA107/125 20 mm – 50 mm	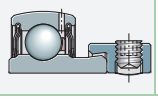	**CUGPP**	**CUGPPA**

Catalogue range; other dimensions and combinations available by agreement.
Further information: SG 1 *https://www.schaeffler.de/std/1D60*
Combinations not possible or not advisable.

	Two-bolt flanged housing		Four-bolt flanged housing	Take-up housing	
	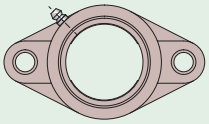	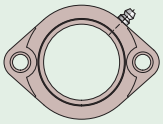	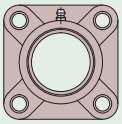	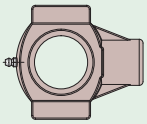	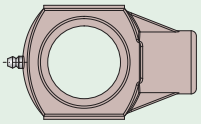
	GEHPFL	**GEHPCTL**	**GEHPF**	**GEHPT**	**GEHPHE**
	SUBPFL	**SUBPCTL**	**SUBPF**	**SUBPT**	**SUBPHE**
	SUCPFL		**SUCPF**	**SUCPT**	**SUCPHE**
	SUGPFL	**SUGPCTL**	**SUGPF**	**SUGPT**	**SUGPHE**
	CUGPFL	**CUGPCTL**	**CUGPF**	**CUGPT**	**CUGPHE**



28
Possible combinations of JIS radial insert ball bearings with JIS housings (Black Series)

Radial insert ball bearing[1]	Cast iron housing[1]	
	Plummer block housing	
	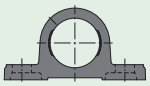	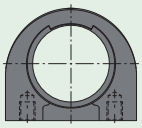
Designation Shaft diameter d	**P**	**PA**
UC 12 mm – 90 mm $^1/_2$″ – 3$^1/_2$″ 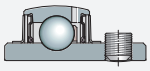	**UCP**	**UCPA**
UK 20 mm – 80 mm 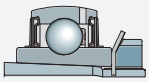	**UKP**	Available by agreement

Catalogue range; other dimensions and combinations available by agreement.
Further information: SG 1 *https://www.schaeffler.de/std/1D60*

[1] With Durotect BS coating

	Two-bolt flanged housing	Four-bolt flanged housing		Take-up housing	
	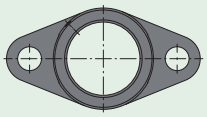	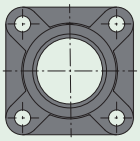	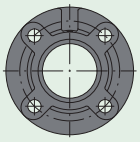	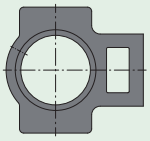	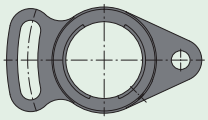
	FL	**F**	**FC**	**T**	**FA**
	UCFL	**UCF**	**UCFC**	**UCT**	**UCFA**
	UKFL	**UKF**	**UKFC**	**UKT**	Available by agreement



1.17 Mounting and dismounting

The detailed guidelines on the mounting and dismounting of radial insert ball bearings must be observed. These can be found in Catalogue SG 1, Radial Insert Ball Bearings and Housing Units *https://www.schaeffler.de/std/1D60*.

Tightening torques for grub screws

The tightening torques for metric and inch size grub screws from Schaeffler are dependent on the material of the screws ➤*1492*| ▦ *29* and ➤*1492*| ▦ *30*. The tightening torques are valid only for original grub screws from Schaeffler (INA or FAG brand).

41
Fully tightening the grub screws or locknut in the inner ring

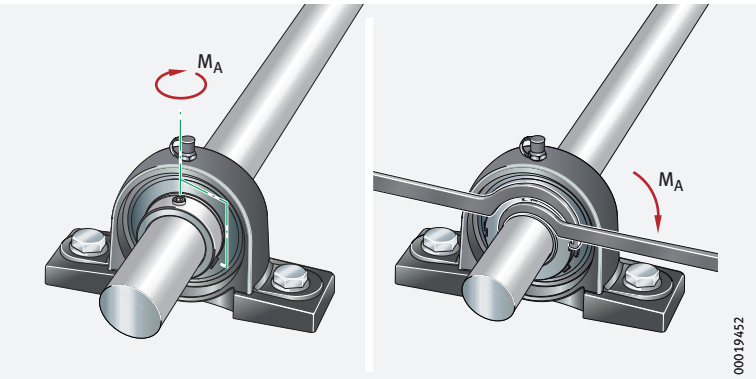

29
Tightening torques for standard grub screws

Width across flats W		Thread		Tightening torque[1] M_A
mm	inch	ISO	UNF	Nm
2,5	3/32	M5	N10-32	3,6
3	1/8	M6×0,75	1/4"-28	6
4	5/32	M8×1	5/16"-24	14
5	3/16	M10×1,25	3/8"-24	26
6	1/4	M12×1,5 M12×1,25[2]	1/2"-20	42

1) *Grub screws from Schaeffler.*
2) *GYE90-KRR-B.*

30
Tightening torques for metric grub screws, corrosion-resistant VA design

Width across flats W mm	Thread	Tightening torque[1] M_A Nm
2,5	M5	2,4
3	M6×0,75	3,9
4	M8×1	8,3
5	M10×1,25	16

1) *High grade steel grub screws from Schaeffler.*

Tightening torques for locknuts

The tightening torques for the locknuts differ between the two brands INA and FAG ➤*1493*|▦*31* and ➤*1493*|▦*32*.

▦*31*
Hook wrenches and tightening torques for radial insert ball bearings of the INA brand

Shaft diameter d mm	Hook wrench, type A to DIN 1810		Tightening torque Locknut M_A	
	for tightening of locknut	for countertensioning of adapter sleeve	min. Nm	max. Nm
20	A 30–32 (HN 4)	A 25–28 (HN 2)	13	17
25	A 40–42 (HN 5)	A 30–32 (HN 3)	22	28
30	A 45–50 (HN 6)	A 34–36 (HN 4)	33	40
35	A 52–55 (HN 7)	A 40–42 (HN 5)	47	56
40	A 58–62 (HN 8)	A 45–50 (HN 6)	70	80
50	A 68–75 (HN 10)	A 52–55 (HN 7)	90	105

▦*32*
Tightening torques for locknuts, Black Series, FAG brand

Shaft d mm	Locknut	Tightening torque M_A ±5% Nm
20	AN05	25
25	AN06	30
30	AN07	40
35	AN08	50
40	AN09	60
45	AN10	75
50	AN11	100
55	AN12	130
60	AN13	150
65	AN15	170
70	AN16	200
75	AN17	230
80	AN18	270

1.18 Legal notice regarding data freshness

✎ *The further development of products may also result in technical changes to catalogue products*

Of central interest to Schaeffler is the further development and optimisation of its products and the satisfaction of its customers. In order that you, as the customer, can keep yourself optimally informed about the progress that is being made here and with regard to the current technical status of the products, we publish any product changes which differ from the printed version in our electronic product catalogue.

§ We therefore reserve the right to make changes to the data and illustrations in this catalogue. This catalogue reflects the status at the time of printing. More recent publications released by us (as printed or digital media) will automatically precede this catalogue if they involve the same subject. Therefore, please always use our electronic product catalogue to check whether more up-to-date information or modification notices exist for your desired product.

Link to electronic product catalogue

The following link will take you to the Schaeffler electronic product catalogue: *https://medias.schaeffler.com*.

1.19 Further information

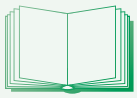

In addition to the data in this chapter, the following chapters in Technical principles must also be observed in the design of bearing arrangements:

- Determining the bearing size ➤34
- Rigidity ➤54
- Friction and increases in temperature ➤56
- Speeds ➤64
- Bearing data ➤97
- Lubrication ➤70
- Sealing ➤185
- Design of bearing arrangements ➤141
- Mounting and dismounting ➤194

The complete catalogue range of the available radial insert ball bearings and housing units, together with all the technical principles, descriptions and product tables, is presented in Catalogue SG 1, Radial Insert Ball Bearings and Housing Units.

- Download and ordering
  https://www.schaeffler.de/std/1D60
- Electronic information system
  https://www.schaeffler.de/std/1D62
- Housing selection wizard
  https://www.schaeffler.de/std/1D61



Radial insert ball bearings with eccentric locking collar

Spherical outside surface of outer ring

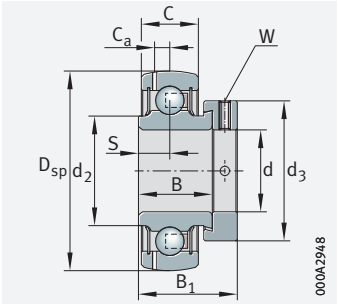

GRAE..-XL-NPP-B

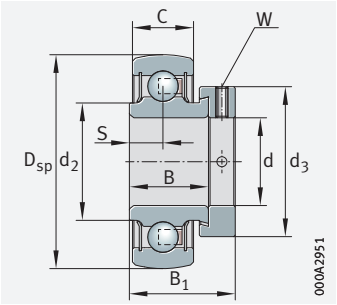

RAE..-XL-NPP-B, RALE..-XL-NPP-B

d = 12 – 25 mm

Main dimensions				Basic load ratings		Fatigue limit load	Factor[1]	Mass	Designation[2]
d	D_{sp}	B_1	d_3	dyn. C_r	stat. C_{0r}	C_{ur}	f_0	m	➤*1473*|*1.12* ➤*1474*|*1.13* X-life➤*1441*
			max.	N	N	N		≈ kg	
12	40	28,6	28,4	10 100	4 750	248	13,1	0,13	**GRAE12-XL-NPP-B**
	40	28,6	28,4	10 100	4 750	248	13,1	0,13	**RAE12-XL-NPP-B**
15	40	28,6	28,4	10 100	4 750	248	13,1	0,11	**GRAE15-XL-NPP-B**
	40	28,6	28,4	10 100	4 750	248	13,1	0,12	**RAE15-XL-NPP-B**
17	40	37,4	28,4	10 100	4 750	248	13,1	0,12	**GE17-XL-KRR-B**
	40	28,6	28,4	10 100	4 750	248	13,1	0,12	**GRAE17-XL-NPP-B**
	40	28,6	28,4	10 100	4 750	248	13,1	0,1	**RAE17-XL-NPP-B**
20	47	43,7	33	13 600	6 600	345	13,1	0,2	**GE20-XL-KLL-B**
	47	43,7	33	13 600	6 600	345	13,1	0,19	**GE20-XL-KRR-B**
	47	43,7	33	13 600	6 600	345	13,1	0,2	**GE20-XL-KRR-B-FA164**
	47	43,7	33	13 600	6 600	345	13,1	0,19	**GE20-XL-KTT-B**
	47	31	33	13 600	6 600	345	13,1	0,16	**GRAE20-XL-NPP-B**
	47	31	33	13 600	6 600	345	13,1	0,16	**RAE20-XL-NPP-B**
	42	24,5	30	10 000	5 000	260	13,9	0,1	**RALE20-XL-NPP-B**
25	52	44,5	37,5	14 900	7 800	410	13,8	0,24	**E25-XL-KRR-B**
	52	44,5	37,5	14 900	7 800	410	13,8	0,25	**GE25-XL-KRR-B**
	52	44,5	37,5	14 900	7 800	410	13,8	0,24	**GE25-XL-KRR-B-FA101**
	52	44,5	37,5	14 900	7 800	410	13,8	0,25	**GE25-XL-KRR-B-FA164**
	52	44,5	37,5	14 900	7 800	410	13,8	0,25	**GE25-XL-KLL-B**
	52	44,5	37,5	14 900	7 800	410	13,8	0,24	**GE25-XL-KTT-B**
	52	44,5	37,5	14 900	7 800	410	13,8	0,26	**GE25-XL-KRR-B-2C**
	52	31	37,5	14 900	7 800	410	13,8	0,19	**GRAE25-XL-NPP-B**
	52	31	37,5	14 900	7 800	410	13,8	0,19	**RAE25-XL-NPP-B**
	47	25,5	36	10 700	5 900	305	13,8	0,12	**RALE25-XL-NPP-B**

medias *https://www.schaeffler.de/std/1F9A*

[1] Factor f_0 for determining equivalent bearing load ➤*1477*|▦*22*.

[2] Permissible speeds of radial insert ball bearings ➤*1464*.

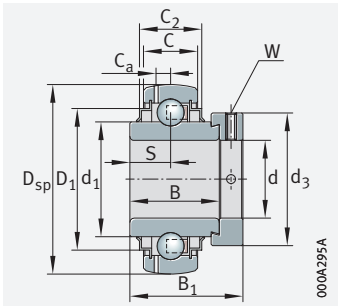

GE..-XL-KRR-B

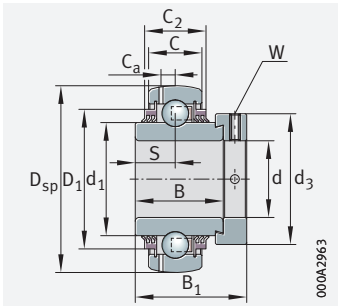

GE..-XL-KTT-B

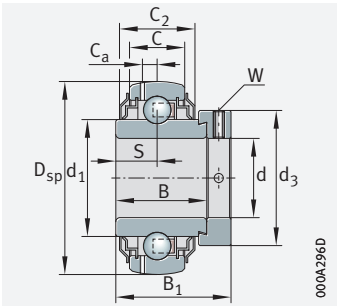

GE..-XL-KRR-B-2C

Dimensions									Width across flats
d	C	C_2	B	S	d_1	d_2	D_1	C_a	W
12	12	–	19	6,5	–	23	–	3,4	3
	12	–	19	6,5	–	23	–	–	3
15	12	–	19	6,5	–	23	–	3,4	3
	12	–	19	6,5	–	23	–	–	3
17	12	16,6	27,8	13,9	23,9	–	31,6	3,4	3
	12	–	19	6,5	–	23	–	3,4	3
	12	–	19	6,5	–	23	–	–	3
20	14	16,6	34,1	17,1	27,6	–	37,4	4	3
	14	16,6	34,1	17,1	27,6	–	37,4	4	3
	14	16,6	34,1	17,1	27,6	–	37,4	4	3
	14	16,6	34,1	17,1	27,6	–	37,4	4	3
	14	–	21,4	7,5	–	26,9	–	4	3
	14	–	21,4	7,5	–	26,9	–	–	3
	12	–	16,7	6	–	25,4	–	–	2,5
25	15	16,7	34,9	17,5	33,8	–	42,5	–	3
	15	16,7	34,9	17,5	33,8	–	42,5	4,1	3
	15	16,7	34,9	17,5	33,8	–	42,5	4,1	3
	15	16,7	34,9	17,5	33,8	–	42,5	4,1	3
	15	20,2	34,9	17,5	33,8	–	42,5	4,1	3
	15	20,2	34,9	17,5	33,8	–	42,5	4,1	3
	15	24,6	34,9	17,5	33,8	–	–	4,1	3
	15	–	21,4	7,5	–	30,5	–	4,1	3
	15	–	21,4	7,5	–	30,5	–	–	3
	12	–	17,5	6	–	30	–	–	2,5

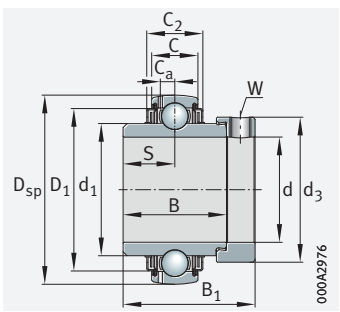

GE..-XL-KLL-B

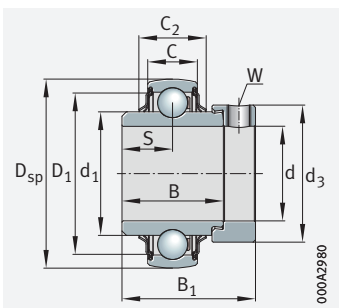

E..-XL-KRR-B

Radial insert ball bearings with eccentric locking collar

Spherical outside surface of outer ring

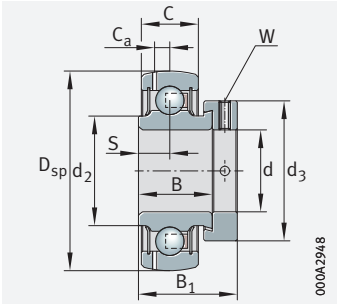

GRAE..-XL-NPP-B

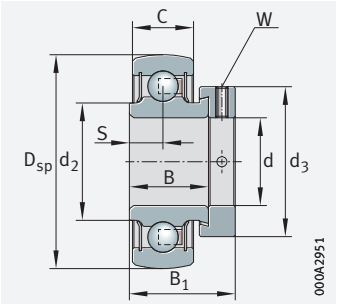

RAE..-XL-NPP-B, RALE..-XL-NPP-B

d = 30 – 35 mm

Main dimensions				Basic load ratings		Fatigue limit load	Factor[1]	Mass	Designation[2]
d	D_{sp}	B_1	d_3 max.	dyn. C_r N	stat. C_{0r} N	C_{ur} N	f_0	m ≈ kg	➤*1473*|*1.12* ➤*1474*|*1.13* X-life ➤*1441*
30	62	48,5	44	20 700	11 300	590	13,8	0,39	**GE30-XL-KLL-B**
	62	48,5	44	20 700	11 300	590	13,8	0,39	**E30-XL-KRR-B**
	62	48,5	44	20 700	11 300	590	13,8	0,39	**GE30-XL-KRR-B**
	62	48,5	44	20 700	11 300	590	13,8	0,38	**GE30-XL-KRR-B-FA101**
	62	48,5	44	20 700	11 300	590	13,8	0,39	**GE30-XL-KRR-B-FA164**
	62	48,5	44	20 700	11 300	590	13,8	0,38	**GE30-XL-KTT-B**
	72	50,2	51	31 500	16 700	870	13	0,63	**GNE30-XL-KRR-B**
	62	48,5	44	20 700	11 300	590	13,8	0,41	**GE30-XL-KRR-B-2C**
	62	35,8	44	20 700	11 300	590	13,8	0,32	**GRAE30-XL-NPP-B**
	62	35,8	44	20 700	11 300	590	13,8	0,32	**RAE30-XL-NPP-B**
	55	26,5	42,5	14 100	8 300	430	13,8	0,18	**RALE30-XL-NPP-B**
35	72	51,3	55	27 500	15 300	800	13,8	0,59	**E35-XL-KRR-B**
	72	51,3	55	27 500	15 300	800	13,8	0,59	**GE35-XL-KRR-B**
	72	51,3	55	27 500	15 300	800	13,8	0,61	**GE35-XL-KRR-B-FA164**
	72	51,3	55	27 500	15 300	800	13,8	0,59	**GE35-XL-KTT-B**
	80	51,6	55	39 000	20 900	1 090	13,1	0,74	**GNE35-XL-KRR-B**
	72	51,3	55	27 500	15 300	800	13,8	0,6	**GE35-XL-KLL-B**
	72	51,3	55	27 500	15 300	800	13,8	0,63	**GE35-XL-KRR-B-2C**
	72	39	55	27 500	15 300	800	13,8	0,52	**GRAE35-XL-NPP-B**
	72	39	55	27 500	15 300	800	13,8	0,52	**RAE35-XL-NPP-B**

medias *https://www.schaeffler.de/std/1F9A*

[1] Factor f_0 for determining equivalent bearing load ➤*1477*|▦*22*.

[2] Permissible speeds of radial insert ball bearings ➤*1464*.

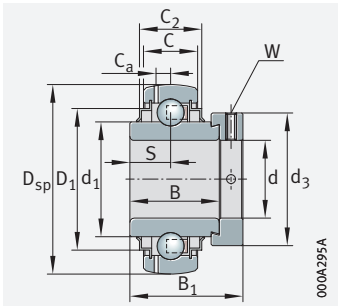

GE..-XL-KRR-B, GNE..-XL-KRR-B

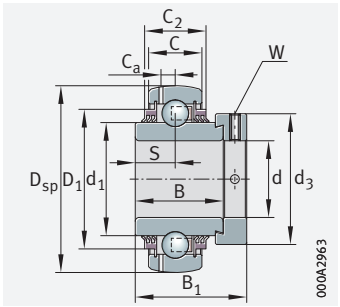

GE..-XL-KTT-B

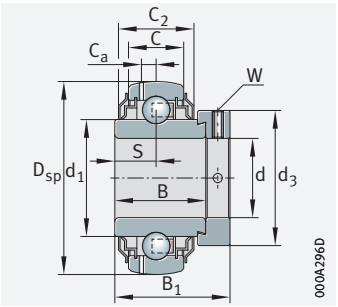

GE..-XL-KRR-B-2C

Dimensions									Width across flats
d	C	C_2	B	S	d_1	d_2	D_1	C_a	W
30	18	20,6	36,5	18,3	40,2	–	52	4,7	4
	18	20,7	36,5	18,3	40,2	–	52	–	4
	18	20,7	36,5	18,3	40,2	–	52	4,7	4
	18	20,7	36,5	18,3	40,2	–	52	4,7	4
	18	20,7	36,5	18,3	40,2	–	52	4,7	4
	18	20,7	36,5	18,3	40,2	–	52	4,7	4
	20	24	36,6	17,5	44	–	60,2	6,2	5
	18	27,2	36,5	18,3	40,2	–	–	4,7	4
	18	–	23,8	9	–	37,4	–	4,7	4
	18	–	23,8	9	–	37,4	–	–	4
	13	–	18,5	6,5	–	35,7	–	–	2,5
35	19	22,5	37,7	18,8	46,8	–	60,3	–	5
	19	22,5	37,7	18,8	46,8	–	60,3	5,6	5
	19	22,5	37,7	18,8	46,8	–	60,3	5,6	5
	19	22,5	37,7	18,8	46,8	–	60,3	5,6	5
	22	25	38,1	18,3	48	–	66,6	6,9	5
	19	25,4	37,7	18,8	46,8	–	60,3	5,6	5
	19	29,2	37,7	18,8	46,8	–	–	5,6	5
	19	–	25,4	9,5	–	44,6	–	5,6	5
	19	–	25,4	9,5	–	44,6	–	–	5

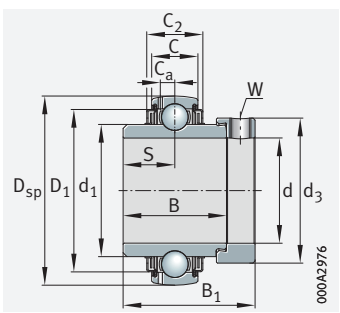

GE..-XL-KLL-B

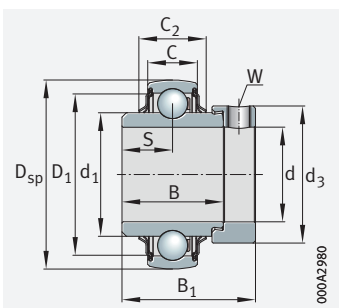

E..-XL-KRR-B

Radial insert ball bearings with eccentric locking collar

Spherical outside surface of outer ring

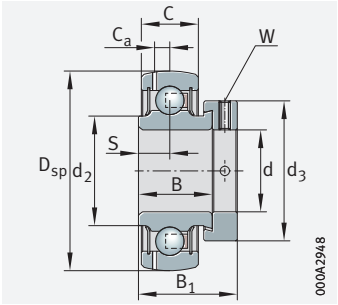

GRAE..-XL-NPP-B

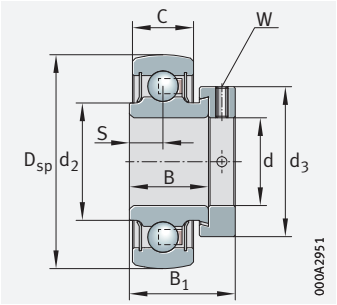

RAE..-XL-NPP-B

d = 40 – 50 mm

Main dimensions				Basic load ratings		Fatigue limit load	Factor[1]	Mass	Designation[2]
d	D_{sp}	B_1	d_3	dyn. C_r	stat. C_{0r}	C_{ur}	f_0	m	➤*1473*|*1.12* ➤*1474*|*1.13* X-life➤*1441*
			max.	N	N	N		≈ kg	
40	80	56,5	58	34 500	19 800	1 030	14	0,73	**E40-XL-KRR-B**
	80	56,5	58	34 500	19 800	1 030	14	0,73	**GE40-XL-KRR-B**
	80	56,5	58	34 500	19 800	1 030	14	0,74	**GE40-XL-KRR-B-FA101**
	80	56,5	58	34 500	19 800	1 030	14	0,75	**GE40-XL-KRR-B-FA164**
	90	54,6	63	47 000	26 000	1 360	13	1,02	**GNE40-XL-KRR-B**
	80	56,5	58	34 500	19 800	1 030	14	0,75	**GE40-XL-KLL-B**
	80	56,5	58	34 500	19 800	1 030	14	0,75	**GE40-XL-KTT-B**
	80	56,5	58	34 500	19 800	1 030	14	0,78	**GE40-XL-KRR-B-2C**
	80	43,8	58	34 500	19 800	1 030	14	0,62	**GRAE40-XL-NPP-B**
	80	43,8	58	34 500	19 800	1 030	14	0,63	**RAE40-XL-NPP-B**
45	85	56,5	63	34 500	20 400	1 060	14,3	0,84	**GE45-XL-KLL-B**
	85	56,5	63	34 500	20 400	1 060	14,3	0,83	**GE45-XL-KRR-B**
	85	56,5	63	34 500	20 400	1 060	14,3	0,83	**GE45-XL-KTT-B**
	85	43,8	63	34 500	20 400	1 060	14,3	0,7	**GRAE45-XL-NPP-B**
50	90	62,8	69	37 500	23 200	1 210	14,3	1	**GE50-XL-KLL-B**
	90	62,8	69	37 500	23 200	1 210	14,3	0,99	**GE50-XL-KRR-B**
	90	62,8	69	37 500	23 200	1 210	14,3	0,99	**GE50-XL-KRR-B-FA101**
	90	62,8	69	37 500	23 200	1 210	14,3	0,99	**GE50-XL-KRR-B-FA164**
	90	62,8	69	37 500	23 200	1 210	14,3	0,98	**GE50-XL-KTT-B**
	110	66,75	75,8	66 000	38 000	1 970	13	1,82	**GNE50-XL-KRR-B**
	90	43,8	69	37 500	23 200	1 210	14,3	0,77	**GRAE50-XL-NPP-B**
	110	66,75	75,8	66 000	38 000	1 970	13	1,82	**NE50-XL-KRR-B**[3]
	90	43,8	69	37 500	23 200	1 210	14,3	0,77	**RAE50-XL-NPP-B**

medias *https://www.schaeffler.de/std/1F9A*

[1] Factor f_0 for determining equivalent bearing load ➤*1477*|▦*22*.

[2] Permissible speeds of radial insert ball bearings ➤*1464*.

[3] No relubrication facility.

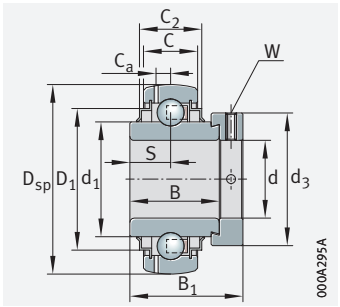

GE..-XL-KRR-B, GNE..-XL-KRR-B

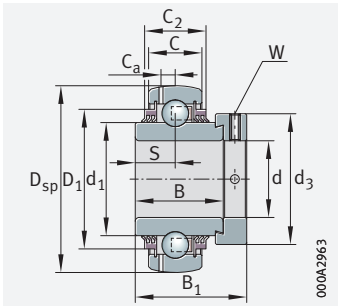

GE..-XL-KTT-B

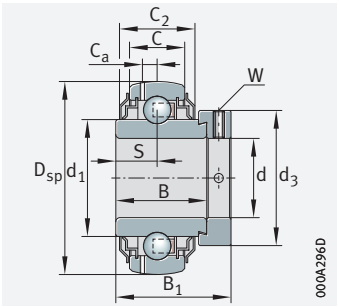

GE..-XL-KRR-B-2C

Dimensions									Width across flats
d	C	C_2	B	S	d_1	d_2	D_1	C_a	W
40	21	23,5	42,9	21,4	52,3	–	68,3	–	5
	21	23,5	42,9	21,4	52,3	–	68,3	6,4	5
	21	23,5	42,9	21,4	52,3	–	68,3	6,4	5
	21	23,5	42,9	21,4	52,3	–	68,3	6,4	5
	23	26	41	18	53,8	–	74,5	7,5	5
	21	28,1	42,9	21,4	52,3	–	68,3	6,4	5
	21	28,1	42,9	21,4	52,3	–	68,3	6,4	5
	21	31,9	42,9	21,4	52,3	–	–	6,4	5
	21	–	30,2	11	–	49,4	–	6,4	5
	21	–	30,2	11	–	49,4	–	–	5
45	22	26,4	42,9	21,4	57,9	–	72,3	6,4	5
	22	26,4	42,9	21,4	57,9	–	72,3	6,4	5
	22	26,4	42,9	21,4	57,9	–	72,3	6,4	5
	22	–	30,2	11	–	54,3	–	6,4	5
50	22	26,4	49,2	24,6	62,8	–	77,3	6,9	5
	22	26,4	49,2	24,6	62,8	–	77,3	6,9	5
	22	26,4	49,2	24,6	62,8	–	77,3	6,9	5
	22	26,4	49,2	24,6	62,8	–	77,3	6,9	5
	22	26,4	49,2	24,6	62,8	–	77,3	6,9	5
	29	–	49,2	24,6	68,8	–	92,7	8,7	5
	22	–	30,2	11	–	59,4	–	6,9	5
	29	–	49,2	24,6	68,8	–	–	–	5
	22	–	30,2	11	–	59,4	–	–	5

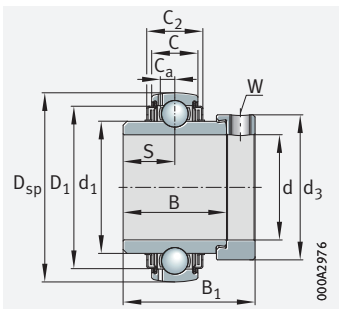

GE..-XL-KLL-B

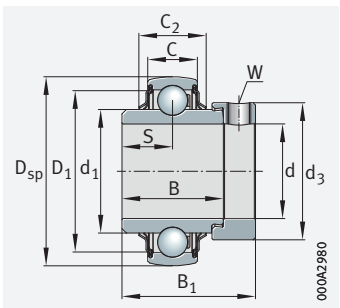

E..-XL-KRR-B, NE..-XL-KRR-B

Radial insert ball bearings with eccentric locking collar

Spherical outside surface of outer ring

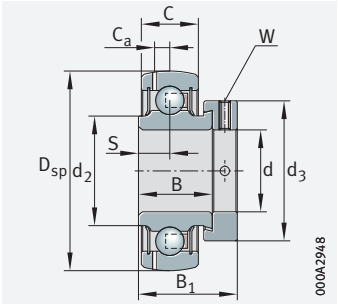

GRAE..-XL-NPP-B

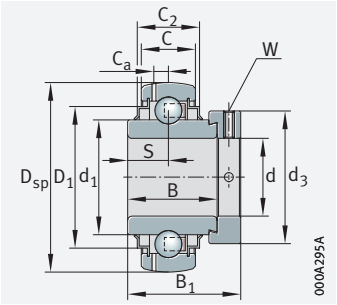

GE..-XL-KRR-B, GNE..-XL-KRR-B

d = 55 – 120 mm

Main dimensions				Basic load ratings		Fatigue limit load	Factor[1]	Mass	Designation[2]
d	D_{sp}	B_1	d_3	dyn. C_r	stat. C_{0r}	C_{ur}	f_0	m	➤*1473*|*1.12* ➤*1474*|*1.13* X-life➤*1441*
			max.	N	N	N		≈ kg	
55	100	71,4	76	46 000	29 000	1 520	14,3	1,37	**GE55-XL-KRR-B**
	100	71,4	76	46 000	29 000	1 520	14,3	1,37	**GE55-XL-KTT-B**
	100	48,4	76	46 000	29 000	1 520	14,3	1,06	**GRAE55-XL-NPP-B**
60	110	77,9	84	56 000	36 000	1 870	14,3	1,8	**GE60-XL-KRR-B**
	110	77,9	84	56 000	36 000	1 870	14,3	1,8	**GE60-XL-KRR-B-FA101**
	110	77,9	84	56 000	36 000	1 870	14,3	1,8	**GE60-XL-KRR-B-FA164**
	110	77,9	84	56 000	36 000	1 870	14,3	1,8	**GE60-XL-KTT-B**
	130	68	89	87 000	52 000	2 700	13,1	2,97	**GNE60-XL-KRR-B**
	110	53,1	84	56 000	36 000	1 870	14,3	1,4	**GRAE60-XL-NPP-B**
65	125	66	96	66 000	44 000	2 300	14,4	2,71	**GE65-214-XL-KRR-B**[3]
	125	66	96	66 000	44 000	2 300	14,4	2,71	**GE65-214-XL-KRR-B-FA164**[3]
	125	66	96	66 000	44 000	2 300	14,4	2,71	**GE65-214-XL-KTT-B**[3]
70	125	66	96	66 000	44 000	2 300	14,4	2,15	**GE70-XL-KRR-B**
	125	66	96	66 000	44 000	2 300	14,4	2,15	**GE70-XL-KRR-B-FA101**
	125	66	96	66 000	44 000	2 300	14,4	2,15	**GE70-XL-KRR-B-FA164**
	125	66	96	66 000	44 000	2 300	14,4	2,15	**GE70-XL-KTT-B**
	150	75,5	102	111 000	68 000	3 400	13,2	3,81	**GNE70-XL-KRR-B**
75	130	67	100	66 000	44 500	2 300	14,4	2,14	**GE75-XL-KRR-B**
	130	67	100	66 000	44 500	2 300	14,4	2,14	**GE75-XL-KRR-B-FA101**
	130	67	100	66 000	44 500	2 300	14,4	2,14	**GE75-XL-KTT-B**
80	140	70,7	108	76 000	54 000	2 700	14,6	2,79	**GE80-XL-KRR-B**
	140	70,7	108	76 000	54 000	2 700	14,6	2,95	**GE80-XL-KRR-B-AH01-FA164**
	140	70,7	108	76 000	54 000	2 700	14,6	2,79	**GE80-XL-KTT-B**
	170	93,6	118	131 000	87 000	4 050	13,2	7,1	**GNE80-XL-KRR-B**[4]
90	160	69,5	118	109 000	79 000	3 650	14,5	3,56	**GE90-XL-KRR-B**[4]
	160	69,5	118	109 000	79 000	3 650	14,5	3,68	**GE90-XL-KRR-B-FA164**[4]
	190	101	132	151 000	107 000	4 750	13,9	8,07	**GNE90-XL-KRR-B**[4]
100	180	75	132	130 000	93 000	4 100	14,4	5	**GE100-XL-KRR-B**[4]
	215	109,4	145	184 000	141 000	5 800	13,8	11,41	**GNE100-XL-KRR-B**[4]
120	215	81	152	165 000	131 000	5 300	14,8	7,49	**GE120-XL-KRR-B**[4]

medias *https://www.schaeffler.de/std/1F9A*

[1] Factor f_0 for determining equivalent bearing load ➤*1477*|⊞*22*.

[2] Permissible speeds of radial insert ball bearings ➤*1464*.

[3] Alternative ball set 6214.

[4] Lubrication groove in outer ring.

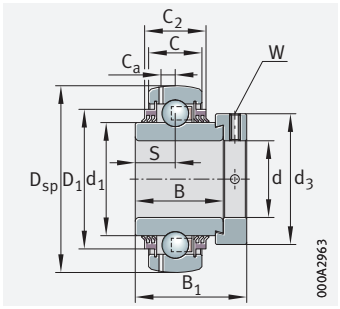

GE..-XL-KTT-B

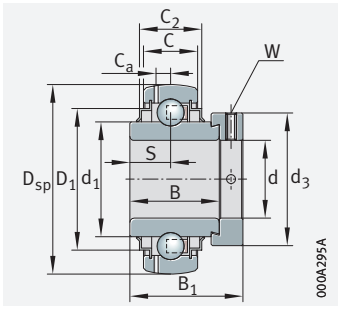

GNE..-XL-KRR-B

Dimensions									Width across flats
d	C	C_2	B	S	d_1	d_2	D_1	C_a	W
55	25	29	55,5	27,8	69,8	–	85,9	7	5
	25	29	55,5	27,8	69,8	–	85,9	7	5
	25	–	32,5	12	–	66	–	7	5
60	24	29	61,9	31	76,5	–	94,5	7,2	5
	24	29	61,9	31	76,5	–	94,5	7,2	5
	24	29	61,9	31	76,5	–	94,5	7,2	5
	24	29	61,9	31	76,5	–	94,5	7,2	5
	33	37,2	52	23	79,4	–	109	11,2	5
	24	–	37,1	13,5	–	72	–	7,2	5
65	28	32	48,5	21,5	85,2	–	109	8,9	6
	28	32	48,5	21,5	85,2	–	109	8,9	6
	28	32	48,5	21,5	85,2	–	109	8,9	6
70	28	32	48,5	21,5	85,2	–	109	8,9	6
	28	32	48,5	21,5	85,2	–	109	8,9	6
	28	32	48,5	21,5	85,2	–	109	8,9	6
	28	32	48,5	21,5	85,2	–	109	8,9	6
	37	41	58	26	92,2	–	127	12	6
75	28	30,5	49,5	21,5	90	–	113	8,5	6
	28	30,5	49,5	21,5	90	–	113	8,5	6
	28	30,5	49,5	21,5	90	–	113	8,5	6
80	30	38	53,2	23,4	97	–	120	8,8	6
	30	38	53,2	23,4	97	–	120	8,8	6
	30	38	53,2	23,4	97	–	120	8,8	6
	41	51	73	34	109	–	142,8	13,2	6
90	32	35	52	23	109,4	–	138	10	6
	32	35	52	23	109,4	–	138	10	6
	45	52,6	77,5	35,5	122,2	–	161,3	14,3	6
100	36	39	57,5	25,5	122,2	–	155,5	11,2	6
	49	59,4	86	39,5	137,1	–	182,8	16,7	6
120	40	45	63,5	28,5	146,4	–	186,5	12,8	6

Radial insert ball bearings with eccentric locking collar

Cylindrical outside surface of outer ring

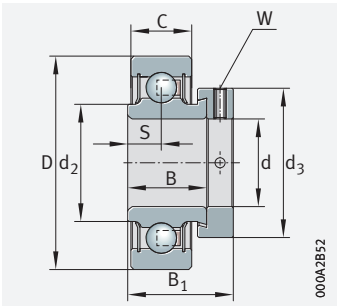

RAE..-XL-NPP-FA106, RALE..-XL-NPP

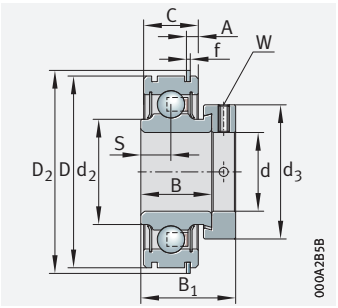

RAE..-XL-NPP-NR

d = 12 – 30 mm

Main dimensions				Basic load ratings		Fatigue limit load	Factor[1]	Mass	Designation[2]
d	D	B_1	d_3	dyn. C_r	stat. C_{0r}	C_{ur}	f_0	m	➤*1473*|*1.12* ➤*1474*|*1.13* X-life➤*1441*
			max.	N	N	N		≈ kg	
12	40	28,6	28,4	10 100	4 750	248	13,1	0,13	**RAE12-XL-NPP-FA106**
15	40	28,6	28,4	10 100	4 750	248	13,1	0,12	**RAE15-XL-NPP-FA106**
17	40	28,6	28,4	10 100	4 750	248	13,1	0,11	**RAE17-XL-NPP-FA106**
20	42	24,5	30	10 000	5 000	260	13,9	0,1	**RALE20-XL-NPP-FA106**
	47	31	33	13 600	6 600	345	13,1	0,17	**RAE20-XL-NPP-FA106**
	47	31	33	13 600	6 600	345	13,1	0,17	**RAE20-XL-NPP-NR**
	47	43,7	33	13 600	6 600	345	13,1	0,2	**E20-XL-KLL**
	47	43,7	33	13 600	6 600	345	13,1	0,2	**E20-XL-KRR**
25	47	25,5	36	10 700	5 900	305	14,5	0,13	**RALE25-XL-NPP**
	52	31	37,5	14 900	7 800	410	13,8	0,2	**RAE25-XL-NPP-FA106**
	52	31	37,5	14 900	7 800	410	13,8	0,2	**RAE25-XL-NPP-NR**
	52	44,5	37,5	14 900	7 800	410	13,8	0,25	**E25-XL-KLL**
	52	44,5	37,5	14 900	7 800	410	13,8	0,25	**E25-XL-KRR**
30	55	26,5	42,5	14 100	8 300	430	14,8	0,18	**RALE30-XL-NPP-FA106**
	62	35,8	44	20 700	11 300	590	13,8	0,33	**RAE30-XL-NPP-FA106**
	62	35,8	44	20 700	11 300	590	13,8	0,33	**RAE30-XL-NPP-NR**
	62	48,5	44	20 700	11 300	590	13,8	0,39	**E30-XL-KLL**
	62	48,5	44	20 700	11 300	590	13,8	0,4	**E30-XL-KRR**

medias *https://www.schaeffler.de/std/1F9A*

[1] Factor f_0 for determining equivalent bearing load ➤*1477*|▦*22*.

[2] Permissible speeds of radial insert ball bearings ➤*1464*.

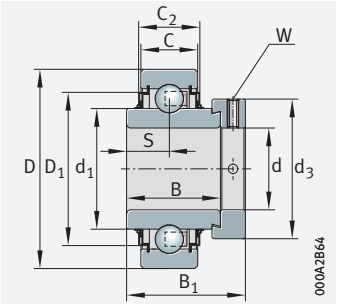

E..-XL-KLL

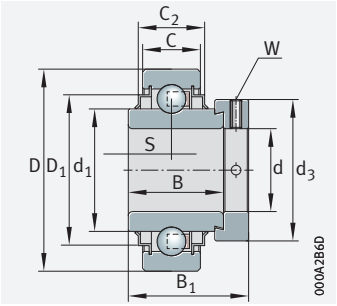

E..-XL-KRR

Dimensions											Width across flats
d	D_2	C	C_2	A	f	B	S	d_1	d_2	D_1	W
12	–	12	–	–	–	19	6,5	–	23	–	3
15	–	12	–	–	–	19	6,5	–	23	–	3
17	–	12	–	–	–	19	6,5	–	23	–	3
20	–	12	–	–	–	16,7	6	–	25,4	–	2,5
	–	14	–	–	–	21,4	7,5	–	26,9	–	3
	52,7	14	–	3,58 $^{0}_{-0,25}$	1,12 $^{0}_{-0,1}$	21,4	7,5	–	26,9	–	3
	–	14	16,6	–	–	34,1	17,1	27,6	–	37,4	3
	–	14	16,6	–	–	34,1	17,1	27,6	–	37,4	3
25	–	12	–	–	–	17,5	6	–	30	–	2,5
	–	15	–	–	–	21,4	7,5	–	30,5	–	3
	57,9	15	–	3,58 $^{0}_{-0,25}$	1,12 $^{0}_{-0,1}$	21,4	7,5	–	30,5	–	3
	–	15	20,2	–	–	34,9	17,5	33,8	–	42,5	3
	–	15	16,7	–	–	34,9	17,5	33,8	–	42,5	3
30	–	13	–	–	–	18,5	6,5	–	35,7	–	2,5
	–	18	–	–	–	23,8	9	–	37,4	–	4
	67,7	18	–	4,98 $^{0}_{-0,3}$	1,7 $^{0}_{-0,1}$	23,8	9	–	37,4	–	4
	–	18	20,6	–	–	36,5	18,3	40,2	–	52	4
	–	18	20,7	–	–	36,5	18,3	40,2	–	52	4

Radial insert ball bearings with eccentric locking collar

Cylindrical outside surface of outer ring

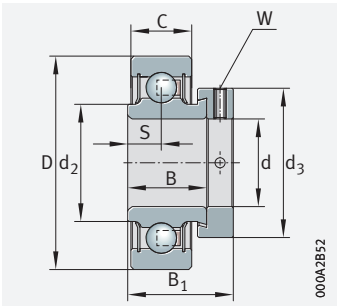

RAE..-XL-NPP(-FA106), RALE..-XL-NPP

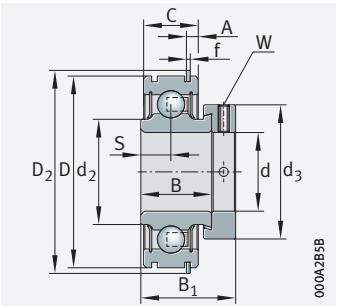

RAE..-XL-NPP-NR

d = 35 – 70 mm

Main dimensions				Basic load ratings		Fatigue limit load	Factor[1]	Mass	Designation[2]
d	D	B_1	d_3	dyn. C_r	stat. C_{0r}	C_{ur}	f_0	m	➤*1473*|*1.12* ➤*1474*|*1.13* X-life➤*1441*
			max.	N	N	N		≈ kg	
35	72	39	55	27 500	15 300	800	13,8	0,54	**RAE35-XL-NPP-FA106**
	72	39	55	27 500	15 300	800	13,8	0,53	**RAE35-XL-NPP-NR**
	72	51,3	55	27 500	15 300	800	13,8	0,6	**E35-XL-KLL**
	72	51,3	55	27 500	15 300	800	13,8	0,61	**E35-XL-KRR**
40	80	43,8	58	34 500	19 800	1 030	14	0,64	**RAE40-XL-NPP-FA106**
	80	43,8	58	34 500	19 800	1 030	14	0,64	**RAE40-XL-NPP-NR**
	80	56,5	58	34 500	19 800	1 030	14	0,76	**E40-XL-KLL**
	80	56,5	58	34 500	19 800	1 030	14	0,75	**E40-XL-KRR**
45	85	43,8	63	34 500	20 400	1 060	14,3	0,72	**RAE45-XL-NPP-FA106**
	85	56,5	63	34 500	20 400	1 060	14,3	0,85	**E45-XL-KLL**
	85	56,5	63	34 500	20 400	1 060	14,3	0,85	**E45-XL-KRR**
50	90	43,8	69	37 500	23 200	1 210	14,3	0,79	**RAE50-XL-NPP-FA106**
	90	62,8	69	37 500	23 200	1 210	14,3	1	**E50-XL-KLL**
	90	62,8	69	37 500	23 200	1 210	14,3	1	**E50-XL-KRR**
60	110	53,1	84	56 000	36 000	1 870	14,3	1,43	**RAE60-XL-NPP**
	110	77,9	84	56 000	36 000	1 870	14,3	1,82	**E60-XL-KRR**
70	125	66	96	66 000	44 000	2 300	14,4	2,45	**E70-XL-KRR**

medias *https://www.schaeffler.de/std/1F9A*

[1] Factor f_0 for determining equivalent bearing load ➤*1477*|▦*22*.

[2] Permissible speeds of radial insert ball bearings ➤*1464*.

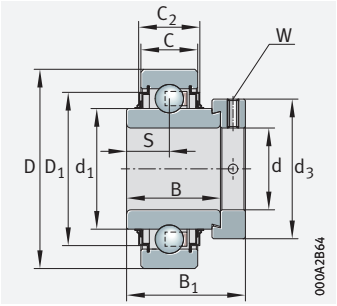

E..-XL-KLL

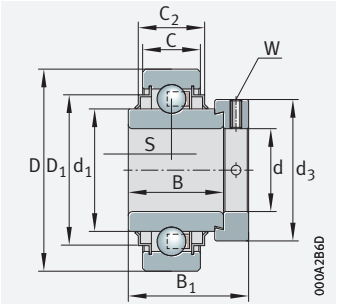

E..-XL-KRR

Dimensions											Width across flats
d	D_2	C	C_2	A	f	B	S	d_1	d_2	D_1	W
35	–	19	–	–	–	25,4	9,5	–	44,6	–	5
	78,6	19	–	4,98 $^{0}_{-0,3}$	1,7 $^{0}_{-0,1}$	25,4	9,5	–	44,6	–	5
	–	19	25,4	–	–	37,7	18,8	46,8	–	60,3	5
	–	19	21,7	–	–	37,7	18,8	46,8	–	60,3	5
40	–	21	–	–	–	30,2	11	–	49,4	–	5
	86,6	21	–	4,98 $^{0}_{-0,3}$	1,7 $^{0}_{-0,1}$	30,2	11	–	49,4	–	5
	–	21	28,1	–	–	42,9	21,4	52,3	–	68,3	5
	–	21	23,5	–	–	42,9	21,4	52,3	–	68,3	5
45	–	22	–	–	–	30,2	11	–	54,5	–	5
	–	22	26,4	–	–	42,9	21,4	57,9	–	72,3	5
	–	22	26,4	–	–	42,9	21,4	57,9	–	72,3	5
50	–	22	–	–	–	30,2	11	–	59,4	–	5
	–	22	26,4	–	–	49,2	24,6	62,8	–	77,3	5
	–	22	26,4	–	–	49,2	24,6	62,8	–	77,3	5
60	–	24	–	–	–	37,1	13,5	–	72	–	5
	–	24	29	–	–	61,9	31	76,5	–	94,5	5
70	–	28	32	–	–	48,5	21,5	85,2	–	109	6

Radial insert ball bearings with grub screws in inner ring

Spherical outside surface of outer ring

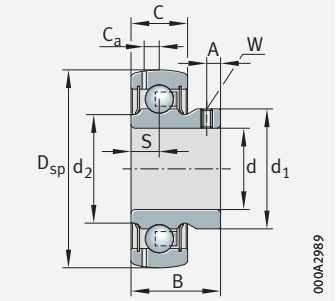

GAY..-XL-NPP-B, AY..-XL-NPP-B

d = 12 – 35 mm

Main dimensions			Basic load ratings		Fatigue limit load	Factor[1]	Mass	Designation[2]
d	D_{sp}	B	dyn. C_r	stat. C_{0r}	C_{ur}	f_0	m	➤*1473*|*1.12* ➤*1474*|*1.13* X-life➤*1441*
			N	N	N		≈ kg	
12	40	27,4	10 100	4 750	248	13,1	0,11	**GYE12-XL-KRR-B**
	40	22	10 100	4 750	248	13,1	0,1	**AY12-XL-NPP-B**
	40	22	10 100	4 750	248	13,1	0,1	**GAY12-XL-NPP-B**
	40	22	10 100	4 750	248	13,1	0,1	**GAY12-XL-NPP-B-FA164**
15	40	27,4	10 100	4 750	248	13,1	0,1	**GYE15-XL-KRR-B**
	40	22	10 100	4 750	248	13,1	0,09	**AY15-XL-NPP-B**
	40	22	10 100	4 750	248	13,1	0,09	**GAY15-XL-NPP-B**
	40	22	10 100	4 750	248	13,1	0,09	**GAY15-XL-NPP-B-FA164**
16	40	27,4	10 100	4 750	248	13,1	0,09	**GYE16-XL-KRR-B**
17	40	27,4	10 100	4 750	248	13,1	0,09	**GYE17-XL-KRR-B**
	40	22	10 100	4 750	248	13,1	0,08	**AY17-XL-NPP-B**
	40	22	10 100	4 750	248	13,1	0,08	**GAY17-XL-NPP-B**
20	47	31	13 600	6 600	345	13,1	0,14	**GYE20-XL-KRR-B**
	47	25	13 600	6 600	345	13,1	0,13	**AY20-XL-NPP-B**
	47	25	13 600	6 600	345	13,1	0,13	**GAY20-XL-NPP-B**
25	52	34,1	14 900	7 800	410	13,8	0,19	**GYE25-XL-KRR-B**
	52	27	14 900	7 800	410	13,8	0,16	**AY25-XL-NPP-B**
	52	27	14 900	7 800	410	13,8	0,16	**GAY25-XL-NPP-B**
30	62	38,1	20 700	11 300	590	13,8	0,31	**GYE30-XL-KRR-B**
	62	30	20 700	11 300	590	13,8	0,25	**AY30-XL-NPP-B**
	62	30	20 700	11 300	590	13,8	0,26	**GAY30-XL-NPP-B**
35	72	42,9	27 500	15 300	800	13,8	0,46	**GYE35-XL-KRR-B**
	72	35	27 500	15 300	800	13,8	0,41	**GAY35-XL-NPP-B**

medias *https://www.schaeffler.de/std/1F9A*

[1] Factor f_0 for determining equivalent bearing load ➤*1477*|▦*22*.

[2] Permissible speeds of radial insert ball bearings ➤*1464*.

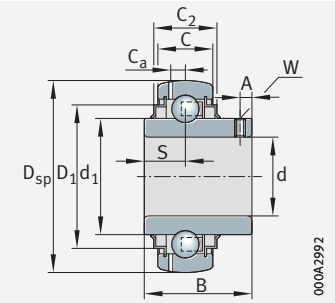

GYE..-XL-KRR-B

Dimensions									Width across flats
d	C	C_2	S	d_1	d_2	D_1	C_a	A	W
12	12	16,6	11,5	23,9	–	31,6	3,4	4	2,5
	12	–	6	23,9	22,9	–	–	4	2,5
	12	–	6	23,9	22,9	–	3,4	4	2,5
	12	–	6	23,9	22,9	–	3,4	4	2,5
15	12	16,6	11,5	23,9	–	31,6	3,4	4	2,5
	12	–	6	23,9	22,9	–	–	4	2,5
	12	–	6	23,9	22,9	–	3,4	4	2,5
	12	–	6	23,9	22,9	–	3,4	4	2,5
16	12	16,6	11,5	23,9	–	31,6	3,4	4	2,5
17	12	16,6	11,5	23,9	–	31,6	3,4	4	2,5
	12	–	6	23,9	22,9	–	–	4	2,5
	12	–	6	23,9	22,9	–	3,4	4	2,5
20	14	16,6	12,7	27,6	–	37,4	4	4,5	2,5
	14	–	7	28,3	26,7	–	–	4,5	2,5
	14	–	7	28,3	26,7	–	4	4,5	2,5
25	15	16,7	14,3	33,8	–	42,5	3,9	5	2,5
	15	–	7,5	33,5	30,4	–	–	5	2,5
	15	–	7,5	33,5	30,4	–	3,9	5	2,5
30	18	20,7	15,9	40,2	–	52	4,7	5,8	3
	18	–	9	39,4	37,3	–	–	5,8	3
	18	–	9	39,4	37,3	–	4,7	5,8	3
35	19	22,5	17,5	46,8	–	60,3	5,6	6	3
	19	–	9,5	46,9	44,5	–	5,6	6	3

Radial insert ball bearings with grub screws in inner ring

Spherical outside surface of outer ring

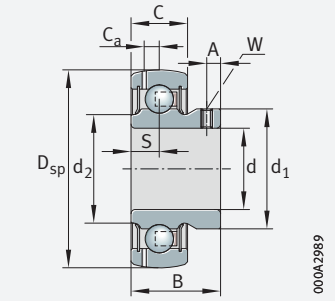

GAY..-XL-NPP-B

d = 40 – 90 mm

Main dimensions			Basic load ratings		Fatigue limit load	Factor[1]	Mass	Designation[2]
d	D_{sp}	B	dyn. C_r	stat. C_{0r}	C_{ur}	f_0	m	➤*1473*|*1.12* ➤*1474*|*1.13* X-life➤*1441*
			N	N	N		≈ kg	
40	80	49,2	34 500	19 800	1 030	14	0,62	**GYE40-XL-KRR-B**
	80	39,45	34 500	19 800	1 030	14	0,53	**GAY40-XL-NPP-B**
45	90	51,6	37 500	23 200	1 210	14,3	0,8	**GYE45-210-XL-KRR-B**[3]
	85	49,2	34 500	20 400	1 060	14,3	0,71	**GYE45-XL-KRR-B**
	85	41,5	34 500	20 400	1 060	14,3	0,6	**GAY45-XL-NPP-B**
50	90	51,6	37 500	23 200	1 210	14,3	0,79	**GYE50-XL-KRR-B**
	90	43	37 500	23 200	1 210	14,3	0,67	**GAY50-XL-NPP-B**
55	100	55,6	46 000	29 000	1 520	14,3	1,08	**GYE55-XL-KRR-B**
60	110	65,1	56 000	36 000	1 870	14,3	1,46	**GYE60-XL-KRR-B**
	110	47	56 000	36 000	1 870	14,3	1,17	**GAY60-XL-NPP-B**
65	125	74,6	66 000	44 000	2 300	14,4	2,25	**GYE65-214-XL-KRR-B**[4]
70	125	74,6	66 000	44 000	2 300	14,4	1,95	**GYE70-XL-KRR-B**
75	130	77,8	66 000	44 500	2 300	14,7	2,07	**GYE75-XL-KRR-B**
80	140	82,6	76 000	54 000	2 700	14,6	2,7	**GYE80-XL-KRR-B**
90	160	96	109 000	79 000	3 650	14,6	3,93	**GYE90-XL-KRR-B**[5]

medias *https://www.schaeffler.de/std/1F9A*

1) Factor f_0 for determining equivalent bearing load ➤*1477*|▦*22*.
2) Permissible speeds of radial insert ball bearings ➤*1464*.
3) Alternative ball set 6210.
4) Alternative ball set 6214.
5) Lubrication groove in outer ring.

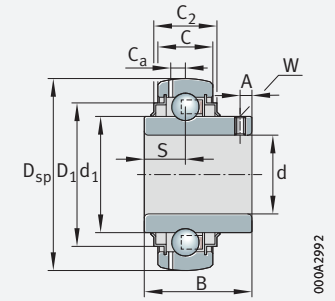

GYE..-XL-KRR-B

Dimensions									Width across flats
d	C	C_2	S	d_1	d_2	D_1	C_a	A	W
40	21	23,5	19	52,3	–	68,3	6,4	8	4
	21	–	10,5	52,4	49,3	–	6,4	8	4
45	22	26,4	19	62,9	–	77,3	6,9	8,5	4
	22	26,4	19	57	–	72,3	6,4	8	4
	22	–	11	57	54,3	–	6,4	8	4
50	22	26,4	19	62,8	–	77,3	6,9	8,5	4
	22	–	11	62	59,3	–	6,9	9	4
55	25	29	22,2	69,8	–	85,9	7	9	4
60	24	29	25,4	76,5	–	94,5	7,2	10,1	5
	24	–	13	76	73,6	–	7,2	10	5
65	28	32	30,2	85,2	–	109	8,9	12,1	5
70	28	32	30,2	85,2	–	109	8,9	12	5
75	28	30,5	33,3	90	–	113	8,5	12,7	5
80	30	38	33,3	97	–	120	8,8	12	5
90	32	35	39,7	109,4	–	138	10	12	6

Inch size radial insert ball bearings

Spherical outside surface of outer ring

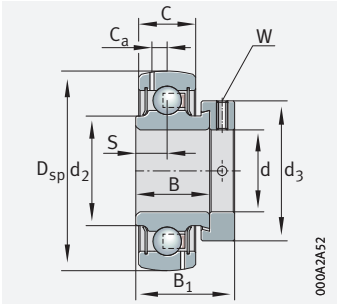

GRA..-NPP-B-AS2/V

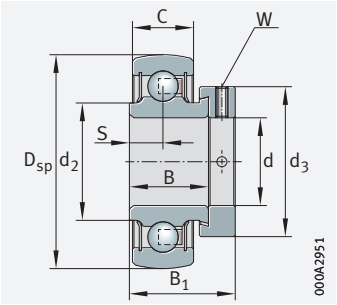

RA..-NPP-B

d = 1/2 – 1 inch

Main dimensions						Basic load ratings		Fatigue limit load	Factor[1]	Mass	Designation[2]
d		D_{sp}	B	B_1	d_3	dyn. C_r	stat. C_{0r}	C_{ur}	f_0	m	➤1473|1.12 ➤1474|1.13
inch	mm					N	N	N		≈ kg	
1/2	12,7	40	27,3	–	–	10 100	4 750	248	13,1	0,11	**GY1008-KRR-B-AS2/V**
5/8	15,875	40	19	28,6	28	10 100	4 750	248	13,1	0,11	**GRA010-NPP-B-AS2/V**
		40	22	–	–	10 100	4 750	248	13,1	0,09	**GAY010-NPP-B-AS2/V**
		40	27,3	–	–	10 100	4 750	248	13,1	0,1	**GY1010-KRR-B-AS2/V**
		40	27,7	37,3	28	10 100	4 750	248	13,1	0,13	**G1010-KRR-B-AS2/V**
3/4	19,05	47	21,4	31	33	13 600	6 600	345	13,1	0,16	**GRA012-NPP-B-AS2/V**
		47	25	–	–	13 600	6 600	345	13,1	0,13	**GAY012-NPP-B-AS2/V**
		47	31	–	–	13 200	6 100	320	13,1	0,15	**GY1012-KRR-B-AS2/V**
		47	34,1	43,7	33	13 600	6 600	345	13,1	0,21	**G1012-KRR-B-AS2/V**
7/8	22,225	52	21,4	31	37,5	14 900	7 800	410	13,8	0,21	**GRA014-NPP-B-AS2/V**
		52	34,1	–	–	14 900	7 800	410	13,8	0,21	**GY1014-KRR-B-AS2/V**
		52	34,9	44,5	37,5	14 900	7 800	410	13,8	0,27	**G1014-KRR-B-AS2/V**
15/16	23,8125	52	34,1	–	–	14 900	7 800	410	13,8	0,2	**GY1015-KRR-B-AS2/V**
		52	34,9	44,5	37,5	14 900	7 800	410	13,8	0,25	**G1015-KRR-B-AS2/V**
1	25,4	52	21,4	31	37,5	14 900	7 800	410	13,8	0,19	**RA100-NPP-B**
		52	21,4	31	37,5	14 900	7 800	410	13,8	0,18	**GRA100-NPP-B-AS2/V**
		52	27	–	–	14 900	7 800	410	13,8	0,15	**GAY100-NPP-B-AS2/V**
		52	34,1	–	–	14 900	7 800	410	13,8	0,18	**GY1100-KRR-B-AS2/V**
		52	34,9	44,5	37,5	14 900	7 800	410	13,8	0,23	**G1100-KRR-B-AS2/V**

medias *https://www.schaeffler.de/std/1F9A*

1) Factor f_0 for determining equivalent bearing load ➤*1477*|▦*22*.

2) Permissible speeds of radial insert ball bearings ➤*1464*.

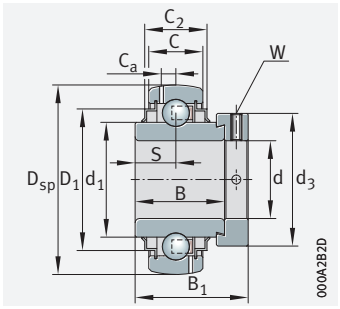

G..-KRR-B-AS2/V

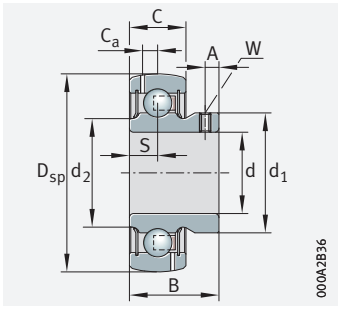

GAY..-NPP-B(-AS2/V)

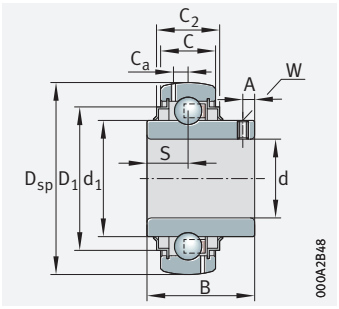

GY..-KRR-B-AS2/V

Dimensions										Width across flats
d		C	C_2	S	d_1	d_2	D_1	C_a	A	W
inch	mm									inch
1/2	12,7	12	–	11,5	23,9	–	–	3,4	4	3/32
5/8	15,875	12	–	6,5	–	23	–	3,4	–	1/8
		12	–	6	23	23	–	3,4	4	3/32
		12	–	11,5	23,9	–	–	3,4	4	3/32
		12	–	13,9	23,9	–	–	3,4	–	1/8
3/4	19,05	14	–	7,5	–	26,9	–	3,9	–	1/8
		14	–	7	27,8	26,9	–	3,9	4,5	3/32
		14	16,2	12,7	27,6	–	37,4	3,9	4,5	3/32
		14	16,2	17,1	27,6	–	37,4	3,9	–	1/8
7/8	22,225	15	–	7,5	–	30,3	–	3,9	–	1/8
		15	16,5	14,3	33,8	–	42,5	3,9	4,9	3/32
		15	16,5	17,5	33,8	–	42,5	3,9	–	1/8
15/16	23,8125	15	16,5	14,3	33,8	–	42,5	3,9	4,9	3/32
		15	16,5	17,5	33,8	–	42,5	3,9	–	1/8
1	25,4	15	–	7,5	–	30,5	–	–	–	1/8
		15	–	7,5	–	30,3	–	3,9	–	1/8
		15	–	7,5	33,6	30,4	–	3,9	5	3/32
		15	16,5	14,3	33,8	–	42,5	3,9	5	3/32
		15	16,5	17,5	33,8	–	42,5	3,9	–	1/8

Inch size radial insert ball bearings

Spherical outside surface of outer ring

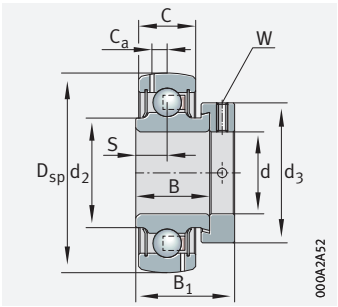

GRA..-NPP-B-AS2/V

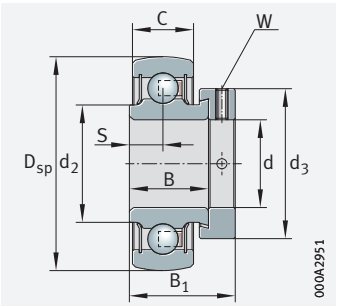

RA..-NPP-B

d = $1\,^1/_8$ – $1\,^7/_{16}$ inch

Main dimensions						Basic load ratings		Fatigue limit load	Factor[1]	Mass	Designation[2]
d		D_{sp}	B	B_1	d_3	dyn. C_r	stat. C_{0r}	C_{ur}	f_0	m	➤*1473*|*1.12* ➤*1474*|*1.13*
inch	mm					N	N	N		≈ kg	
$1\,^1/_8$	28,575	62	23,8	35,8	44	20 700	11 300	590	13,8	0,32	**GRA102-NPP-B-AS2/V**
		62	36,5	48,5	44	20 700	11 300	590	13,8	0,4	**G1102-KRR-B-AS2/V**
		62	38,1	–	–	20 700	11 300	590	13,8	0,32	**GY1102-KRR-B-AS2/V**
$1\,^3/_{16}$	30,1625	62	23,8	35,8	44	20 700	11 300	590	13,8	0,3	**GRA103-NPP-B-AS2/V**
		62	36,5	48,35	44	20 700	11 300	590	13,8	0,37	**G1103-KRR-B-AS2/V**
		62	38,1	–	–	20 700	11 300	590	13,8	0,3	**GY1103-KRR-B-AS2/V**
$1\,^1/_4$	31,75	62	23,8	35,8	44	20 700	11 300	590	13,8	0,31	**RA104-206-NPP-B**
		62	23,8	35,8	44	20 700	11 300	590	13,8	0,28	**GRA104-206-NPP-B-AS2/V**
		62	36,5	48,5	44	20 700	11 300	590	13,8	0,34	**G1104-206-KRR-B-AS2/V**
		62	38,1	–	–	20 700	11 300	590	13,8	0,27	**GY1104-206-KRR-B-AS2/V**
		72	25,4	39	51	27 500	15 300	800	13,8	0,48	**RA104-NPP-B**
		72	25,4	39	51	27 500	15 300	800	13,8	0,5	**GRA104-NPP-B-AS2/V**
		72	35	–	–	27 500	15 300	800	13,8	0,44	**GAY104-NPP-B-AS2/V**[3]
		72	37,7	51,3	51	27 500	15 300	800	13,8	0,65	**G1104-KRR-B-AS2/V**
		72	42,9	–	–	27 500	15 300	800	13,8	0,5	**GY1104-KRR-B-AS2/V**
$1\,^3/_8$	34,925	72	25,4	39	51	27 500	15 300	800	13,8	0,45	**GRA106-NPP-B-AS2/V**
		72	37,7	51,3	51	27 500	15 300	800	13,8	0,54	**G1106-KRR-B-AS2/V**
		72	42,9	–	–	27 500	15 300	800	13,8	0,45	**GY1106-KRR-B-AS2/V**
$1\,^7/_{16}$	36,5125	72	25,4	39	51	27 500	15 300	800	13,8	0,43	**GRA107-NPP-B-AS2/V**
		72	35	–	–	27 500	15 300	800	13,8	0,37	**GAY107-NPP-B-AS2/V**
		72	37,7	51,3	51	27 500	15 300	800	13,8	0,5	**G1107-KRR-B-AS2/V**
		72	42,9	–	–	27 500	15 300	800	13,8	0,42	**GY1107-KRR-B-AS2/V**

medias *https://www.schaeffler.de/std/1F9A*

[1] Factor f_0 for determining equivalent bearing load ➤*1477*\|▦*22*.

[2] Permissible speeds of radial insert ball bearings ➤*1464*.

[3] Available by agreement.

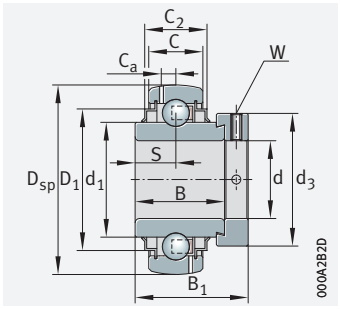

G..-KRR-B-AS2/V

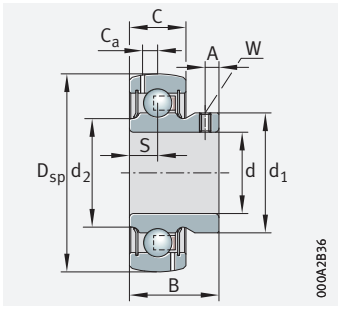

GAY..-NPP-B-AS2/V

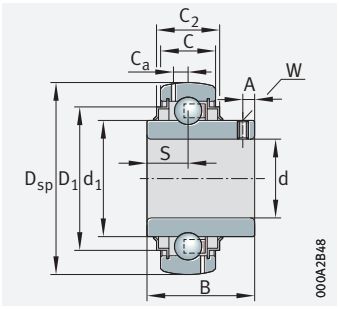

GY..-KRR-B-AS2/V

Dimensions										Width across flats
d		C	C_2	S	d_1	d_2	D_1	C_a	A	W
inch	mm									inch
1 1/8	28,575	18	–	9	–	37,3	–	5	–	5/32
		18	20,7	18,3	40,2	–	52	5	–	5/32
		18	20	15,9	40,2	–	51,8	5	5,6	1/8
1 3/16	30,1625	18	–	9	–	37,3	–	4,9	–	5/32
		18	20,7	18,3	40,2	–	52	5	–	5/32
		18	20	15,9	40,2	–	51,8	5	5,6	1/8
1 1/4	31,75	18	–	9	–	37,4	–	–	–	5/32
		18	–	9	–	37,3	–	5	–	5/32
		18	20,7	18,3	40,2	–	52	5	–	5/32
		18	20	15,9	40,2	–	51,8	5	5,6	1/8
		19	–	9,5	–	44,6	–	–	–	3/16
		19	–	9,5	–	44,5	–	5,7	–	3/16
		19	–	9,5	47,1	44,5	–	5,7	8	1/8
		19	22,5	18,8	46,8	–	60,3	5,7	–	5/32
		19	20,7	17,5	46,8	–	60,2	5,7	5,9	1/8
1 3/8	34,925	19	–	9,5	–	44,5	–	5,7	–	3/16
		19	22,5	18,8	46,8	–	60,3	5,7	–	3/16
		19	20,7	17,5	46,8	–	60	5,7	7,9	1/8
1 7/16	36,5125	19	–	9,5	–	44,5	–	5,7	–	3/16
		19	–	9,5	47,1	44,5	–	5,7	8	1/8
		19	20,7	18,8	46,8	–	60,3	5,7	–	3/16
		19	20,7	17,5	46,8	–	60	5,7	6	1/8

Inch size radial insert ball bearings

Spherical outside surface of outer ring

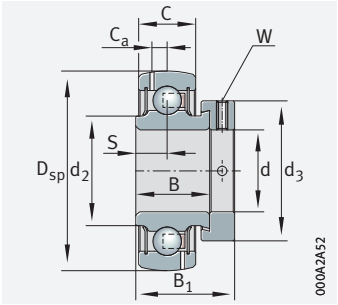

GRA..-NPP-B-AS2/V

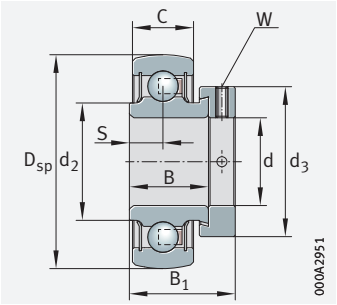

RA..-NPP-B

d = $1^{1}/_{2}$ – $2^{15}/_{16}$ inch

Main dimensions						Basic load ratings		Fatigue limit load	Factor[1]	Mass	Designation[2]
d		D_{sp}	B	B_1	d_3	dyn. C_r	stat. C_{0r}	C_{ur}	f_0	m	➤*1473*|*1.12* ➤*1474*|*1.13*
inch	mm					N	N	N		≈ kg	
$1^{1}/_{2}$	38,1	80	30,2	43,8	58	34 500	19 800	1 030	14	0,62	**RA108-NPP-B**
		80	30,2	43,8	58	34 500	19 800	1 030	14	0,64	**GRA108-NPP-B-AS2/V**
		80	42,9	56,5	58	34 500	19 800	1 030	14	0,76	**G1108-KRR-B-AS2/V**
$1^{5}/_{8}$	41,275	85	42,9	56,5	63	34 500	20 400	1 060	14,3	0,9	**G1110-KRR-B-AS2/V**
$1^{11}/_{16}$	42,8625	85	42,9	56,5	63	34 500	20 400	1 060	14,3	0,85	**G1111-KRR-B-AS2/V**
$1^{3}/_{4}$	44,45	85	42,9	56,5	63	34 500	20 400	1 060	14,3	0,81	**G1112-KRR-B-AS2/V**
		85	49,2	–	–	34 500	20 400	1 060	14,3	0,68	**GY1112-KRR-B-AS2/V**
$1^{15}/_{16}$	49,2125	90	30,2	43,8	69	37 500	23 200	1 210	14,3	0,75	**GRA115-NPP-B-AS2/V**[3]
		90	49,2	62,75	69	37 500	23 200	1 210	14,3	1,01	**G1115-KRR-B-AS2/V**
		90	51,6	–	–	37 500	23 200	1 210	14,3	0,82	**GY1115-KRR-B-AS2/V**
2	50,8	100	55,5	71,4	76	46 000	29 000	1 520	14,3	1,51	**G1200-KRR-B-AS2/V**
		100	55,6	–	–	46 000	29 000	1 520	14,3	1,18	**GY1200-KRR-B-AS2/V**
$2^{3}/_{16}$	55,5625	100	55,5	71,4	76	46 000	29 000	1 520	14,3	1,28	**G1203-KRR-B-AS2/V**
		100	55,5	–	–	46 000	29 000	1 520	14,3	1,01	**GY1203-KRR-B-AS2/V**
$2^{7}/_{16}$	61,912	110	61,9	77,9	84	56 000	36 000	1 870	14,3	1,59	**G1207-KRR-B-AS2/V**
$2^{15}/_{16}$	74,6125	130	49,5	67	100,5	66 000	44 500	2 300	14,7	2,09	**G1215-KRR-B-AS2/V**
		130	77,8	–	–	66 000	44 500	2 300	14,7	2,01	**GY1215-KRR-B-AS2/V**

medias *https://www.schaeffler.de/std/1F9A*

[1] Factor f_0 for determining equivalent bearing load ➤*1477*|▦*22*.

[2] Permissible speeds of radial insert ball bearings ➤*1464*.

[3] Available by agreement.

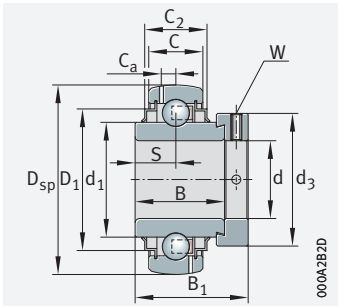

G..-KRR-B-AS2/V

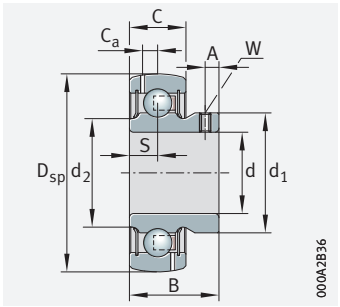

GAY..-NPP-B-AS2/V

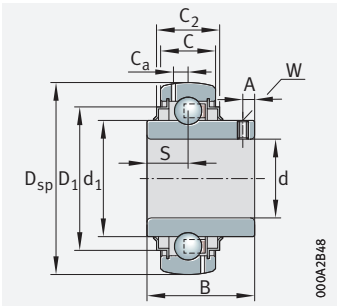

GY..-KRR-B-AS2/V

Dimensions										Width across flats
d		C	C_2	S	d_1	d_2	D_1	C_a	A	W
inch	mm									inch
$1^{1}/_{2}$	38,1	21	–	11	–	49,4	–	–	–	$^{3}/_{16}$
		21	–	11	–	49,3	–	6,5	–	$^{3}/_{16}$
		21	22,5	21,4	52,3	–	68,3	6,5	–	$^{3}/_{16}$
$1^{5}/_{8}$	41,275	22	25,7	21,4	57,9	–	72,3	6,4	–	$^{3}/_{16}$
$1^{11}/_{16}$	42,8625	22	25,7	21,4	57,9	–	72,3	6,4	–	$^{3}/_{16}$
$1^{3}/_{4}$	44,45	22	25,7	21,4	57,9	–	72,3	6,4	–	$^{3}/_{16}$
		22	25,7	19	57,9	–	71,7	6,4	8	$^{5}/_{32}$
$1^{15}/_{16}$	49,2125	22	–	11	–	59,3	–	6,8	–	$^{3}/_{16}$
		22	26,1	24,6	62,8	–	77,3	6,8	–	$^{3}/_{16}$
		22	26	19	62,8	–	76,7	6,8	10	$^{5}/_{32}$
2	50,8	25	28,4	27,8	69,8	–	85,9	7,1	–	$^{3}/_{16}$
		25	28,4	22,2	69,8	–	85,3	7,1	9,1	$^{5}/_{32}$
$2^{3}/_{16}$	55,5625	25	28,4	27,8	69,8	–	85,3	7,08	–	$^{3}/_{16}$
		25	28,4	22,2	69,8	–	85,3	7,1	10	$^{5}/_{32}$
$2^{7}/_{16}$	61,912	24	29,3	31	76,5	–	95,3	7,8	–	$^{3}/_{16}$
$2^{15}/_{16}$	74,6125	28	30,5	21,5	99	–	112,9	8,56	–	$^{1}/_{4}$
		28	31,5	33,4	90	–	113	8,5	12,6	$^{3}/_{16}$

Inch size radial insert ball bearings

Cylindrical outside surface of outer ring

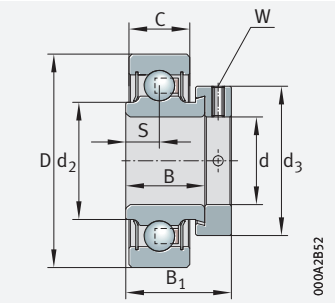

RA..-NPP, RAL..-NPP

d = $^3/_4$ – $1^1/_2$ inch

Main dimensions					Basic load ratings		Fatigue limit load	Factor[1]	Mass	Designation[2]
d		D	B_1	d_3	dyn. C_r	stat. C_{0r}	C_{ur}	f_0	m	➤*1473*|*1.12* ➤*1474*|*1.13*
inch	mm			max.	N	N	N		≈ kg	
$^3/_4$	19,05	42	24,6	30	10 000	5 000	260	13,9	0,09	**RAL012-NPP**
$^7/_8$	22,225	52	31	37,5	14 900	7 800	410	13,8	0,19	**RA014-NPP**
1	25,4	52	31	37,5	14 900	7 800	410	13,8	0,19	**RA100-NPP**
$1^1/_8$	28,575	62	35,8	44	20 700	11 300	590	13,8	0,31	**RA102-NPP**
$1^3/_{16}$	30,1625	62	35,8	44B	20 700	11 300	590	13,8	0,31	**RA103-NPP**
$1^1/_4$	31,75	62	35,8	44	20 700	11 300	590	13,8	0,31	**RA104-206-NPP**
		72	39	51	27 500	15 300	800	13,8	0,48	**RA104-NPP**
$1^7/_{16}$	36,5125	72	39	51	27 500	15 300	800	13,8	0,48	**RA107-NPP**
$1^1/_2$	38,1	80	43,8	58	34 500	19 800	1 030	14	0,62	**RA108-NPP**

medias *https://www.schaeffler.de/std/1F9A*

[1] Factor f_0 for determining equivalent bearing load ➤*1477*|▦*22*.

[2] Permissible speeds of radial insert ball bearings ➤*1464*.

Dimensions						Width across flats
d		C	B	S	d_2	W
inch	mm					inch
3/4	19,05	12	16,7	6	25,4	1/8
7/8	22,225	15	21,4	7,5	30,5	1/8
1	25,4	15	21,4	7,5	30,5	1/8
1 1/8	28,575	18	23,8	9	37,4	5/32
1 3/16	30,1625	18	23,8	9	37,4	5/32
1 1/4	31,75	18	23,8	9	37,4	5/32
		19	25,4	9,5	44,6	3/16
1 7/16	36,5125	19	25,4	9,5	44,6	3/16
1 1/2	38,1	21	30,2	11	49,4	3/16



Radial insert ball bearings with adapter sleeve

Spherical outside surface of outer ring

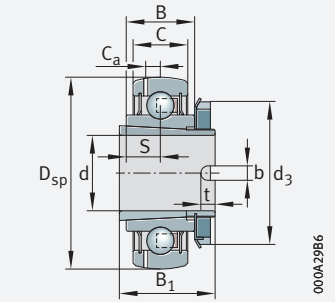

GSH..-XL-2RSR-B

d = 20 – 50 mm

Main dimensions				Basic load ratings		Fatigue limit load	Limiting speed[1]	Factor[2]	Mass	Designation
d	D_{sp}	B_1	d_3	dyn. C_r	stat. C_{0r}	C_{ur}	n_G grease	f_0	m	➤*1473*|*1.12* ➤*1474*|*1.13* X-life➤*1441*
H8			max.	N	N	N	min^{-1}		≈ kg	
20	47	28	32	13 400	7 000	365	8 700	13,1	0,14	**GSH20-XL-2RSR-B**
25	52	28	38	14 400	8 100	420	7 500	13,8	0,17	**GSH25-XL-2RSR-B**
30	62	32	45	20 100	11 600	600	6 200	13,8	0,27	**GSH30-XL-2RSR-B**
35	72	34	52	26 500	15 700	820	5 500	13,8	0,43	**GSH35-XL-2RSR-B**
40	80	38	58	31 000	19 700	1 030	4 850	14	0,54	**GSH40-XL-2RSR-B**
45	85	46	62	31 000	20 100	1 050	4 500	14,3	0,69	**GSH45-XL-2RSR-B**
50	90	40	70	35 000	23 100	1 200	4 150	14,3	0,64	**GSH50-XL-2RSR-B**

medias *https://www.schaeffler.de/std/1F9A*

[1] Preferably for shafts of tolerance classes h6 Ⓔ to h11 Ⓔ.

[2] Factor f_0 for determining equivalent bearing load ➤*1477*\|▦*22*.

Dimensions						
d H8	C	B	S	C_a	b	t
20	14	15	7,5	4	5	5
25	15	15	7,5	3,9	5	5
30	18	18	9	4,7	5	5
35	19	19	9,5	5,8	5	5
40	21	22	11	6,4	5	5
45	22	36	18	6,4	5	5
50	22	22	11	6,5	5	5



Radial insert ball bearings with drive slot

Non-locating bearings
Spherical outside surface of outer ring

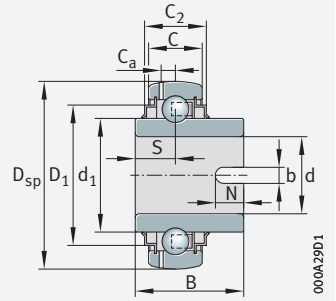

GLE..-XL-KRR-B

d = 20 – 70 mm

Main dimensions			Basic load ratings		Fatigue limit load	Factor[1]	Mass	Designation[2]
d	D_{sp}	B	dyn. C_r	stat. C_{0r}	C_{ur}	f_0	m	➤*1473*|*1.12* ➤*1474*|*1.13* X-life➤*1441*
			N	N	N		≈ kg	
20	47	34,1	13 600	6 600	345	13,1	0,15	**GLE20-XL-KRR-B**
25	52	34,9	14 900	7 800	410	13,8	0,19	**GLE25-XL-KRR-B**
30	62	36,5	20 700	11 300	590	13,8	0,3	**GLE30-XL-KRR-B**
35	72	37,7	27 500	15 300	800	13,8	0,43	**GLE35-XL-KRR-B**
40	80	42,9	34 500	19 800	1 030	14	0,57	**GLE40-XL-KRR-B**
45	85	42,9	34 500	20 400	1 060	14,3	0,66	**GLE45-XL-KRR-B**
50	90	49,2	37 500	23 200	1 210	14,3	0,76	**GLE50-XL-KRR-B**
60	110	61,9	56 000	36 000	1 870	14,3	1,46	**GLE60-XL-KRR-B**
70	125	68,2	66 000	44 000	2 300	14,4	1,9	**GLE70-XL-KRR-B**

medias *https://www.schaeffler.de/std/1F9A*

[1] Factor f_0 for determining equivalent bearing load ➤*1477*|▦*22*.

[2] Permissible speeds of radial insert ball bearings ➤*1464*.

	Dimensions							
	d	C	C_2	S	d_1	D_1	C_a	N	b H11
	20	14	16,6	15,6	27,6	37,4	4	7	7
	25	15	16,7	14,7	33,8	42,5	3,9	8	7
	30	18	20,7	14,5	40,2	52	4,7	8	7
	35	19	22,5	15,7	46,8	60,3	5,6	8	7
	40	21	23,5	15,9	52,3	68,3	6,4	9	7
	45	22	26,4	17,4	57,9	72,3	6,4	9	7
	50	22	26,4	19	62,8	77,3	6,9	10	7
	60	24	29	24,6	76,5	95,9	7,2	12	9
	70	28	32	27	85,2	109	8,9	12	9



Self-aligning deep groove ball bearings

Spherical outside surface of outer ring
Bore for fit

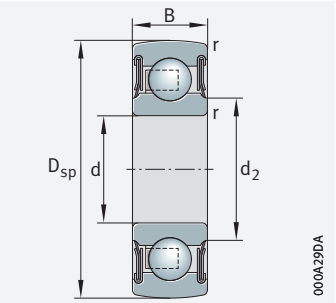

2..-XL-NPP-B

d = 12 – 50 mm

Main dimensions			Basic load ratings		Fatigue limit load	Limiting speed	Factor[1]	Mass	Designation	Dimensions	
d	D_{sp}	B	dyn. C_r	stat. C_{0r}	C_{ur}	n_G grease	f_0	m	➤*1473*|*1.12* ➤*1474*|*1.13* X-life➤*1441*	d_2	r_{min}
			N	N	N	min^{-1}		≈ kg			
12	32	10	7 200	3 050	159	14 600	12,3	0,04	**201-XL-NPP-B**[2]	17,1	0,6
17	40	12	10 100	4 750	248	11 100	13,1	0,06	**203-XL-NPP-B**[3]	22,5	0,6
20	47	14	13 600	6 600	345	9 300	13,1	0,11	**204-XL-NPP-B**[3]	26,5	1
25	52	15	14 900	7 800	410	8 000	13,8	0,13	**205-XL-NPP-B**[3]	30,3	1
30	62	16	20 700	11 300	590	6 700	13,8	0,2	**206-XL-NPP-B**[2]	37,4	1
35	72	17	27 500	15 300	800	5 700	13,8	0,29	**207-XL-NPP-B**[2]	42,4	1
40	80	18	34 500	19 800	1 030	5 000	14	0,37	**208-XL-NPP-B**[2]	48,4	1,1
45	85	19	34 500	20 400	1 060	4 650	14,3	0,41	**209-XL-NPP-B**[2]	53,2	1,1
50	90	20	37 500	23 200	1 210	4 300	14,3	0,46	**210-XL-NPP-B**[3]	58,2	1,1

medias *https://www.schaeffler.de/std/1F9A*

[1] Factor f_0 for determining equivalent bearing load ➤*1477*|▦*22*.

[2] One-piece seal with vulcanised seal lip.

[3] Three-piece P seal.



Deep groove ball bearings with extended inner ring

Cylindrical outside surface of outer ring
Bore for fit

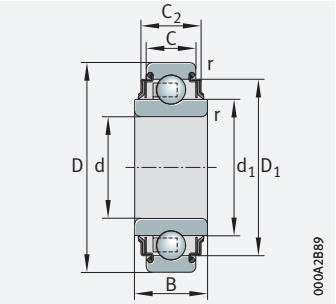

2..-XL-KRR, 2..-XL-KRR-AH..

d = 13 – 60 mm

Main dimensions				Basic load ratings		Fatigue limit load	Limiting speed	Factor[1]	Mass	Designation[2]
d		D	B	dyn. C_r	stat. C_{0r}	C_{ur}	n_G grease	f_0	m	➤*1473*|*1.12* ➤*1474*|*1.13* X-life➤*1441*
				N	N	N	min^{-1}		≈ kg	
13	+0,08 –0,05	40	18,3	10 100	4 750	248	11 100	13,1	0,09	**203-XL-KRR-AH05**[3]
15		35	14,4	8 100	3 700	193	12 700	13,1	0,05	**202-XL-KRR**
16,2	+0,1 0	40	18,3	10 100	4 750	248	11 100	13,1	0,07	**203-XL-KRR-AH02**
17		40	18,3	10 100	4 750	248	11 100	13,1	0,07	**203-XL-KRR**
20		47	17,7	13 600	6 600	345	9 300	13,1	0,12	**204-XL-KRR**
25		52	21	14 900	7 800	410	8 000	13,8	0,16	**205-XL-KRR**
30		62	24	20 700	11 300	590	6 700	13,8	0,24	**206-XL-KRR**
35		72	25	27 500	15 300	800	5 700	13,8	0,35	**207-XL-KRR-AH03**[4]
38,892		80	27,5	34 500	19 800	1 030	5 000	14	0,48	**208-XL-KRR-AH04**[4]
40		80	27	34 500	19 800	1 030	5 000	14	0,44	**208-XL-KRR**
45		85	30	34 500	20 400	1 060	4 650	14,3	0,53	**209-XL-KRR**
50		90	30	37 500	23 200	1 210	4 300	14,3	0,58	**210-XL-KRR**
55		100	36	46 000	29 000	1 520	3 900	14,3	0,85	**211-XL-KRR**
60		110	36	56 000	36 000	1 870	3 550	14,3	1,1	**212-XL-KRR**

medias *https://www.schaeffler.de/std/1F9A*

[1] Factor f_0 for determining equivalent bearing load ➤*1477*|▦*22*.

[2] Internal clearance Group N.

[3] Greased with L114 (GA47).

[4] With steel cage.

Dimensions						
d		C	C_2	d_1	D_1	r_{min}
13	+0,08 −0,05	12	12	24,2	40	0,6
15		11	11	21,5	28,8	0,6
16,2	+0,1 0	12	12	24,2	32,6	0,6
17		12	12	24,2	32,9	0,6
20		14	14	28,7	38,7	1
25		15	16,7	33,8	42,6	1
30		16	19,6	40,2	52	1
35		17	19,7	46,8	60,3	2
38,892		21	21,2	52,3	68,2	1
40		18	20,5	52,3	68,2	1,1
45		19	26,4	57,9	72,3	1,1
50		20	24	62,8	77,6	1,1
55		21	27,5	69,8	85,9	1,5
60		22	30	76,5	94,7	1,5



Self-aligning deep groove ball bearings

Spherical outside surface of outer ring
Square bore

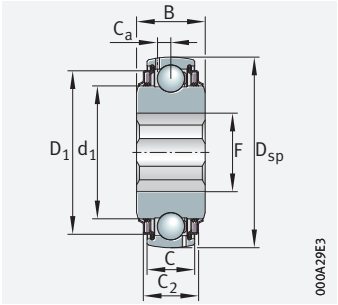

GVK(E)..-KTT-B(-AS2/V)(-AH)

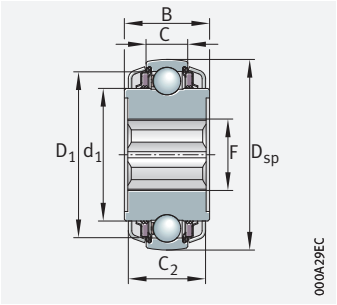

VKE..-KTT-B-2C

d = 16,3 – 39,6875 mm

Main dimensions					Basic load ratings		Fatigue limit load	Factor[1]	Mass	Designation
d			D_{sp}	B	dyn. C_r	stat. C_{0r}	C_{ur}	f_0	m	➤*1473*|*1.12* ➤*1474*|*1.13*
mm		inch			N	N	N		≈ kg	
16,3	+0,2 0	–	52	28	14 900	7 800	410	13,8	0,22	**GVKE16-205-KRR-B-AS2/V-AH01**
	+0,2 0		52	28	14 900	7 800	410	13,8	0,24	**GVKE16-205-KRR-B-2C-AS2/V-AH01**
25,4	+0,9 +0,6	*1*	80	36,5	34 500	19 800	1 030	14	0,67	**VK100-208-KTT-B-AH10**
	+0,9 +0,6		80	36,5	34 500	19 800	1 030	14	0,74	**GVK100-208-KTT-B-AS2/V**
28	+0,9 +0,6	–	85	42,9	34 500	20 400	1 060	14,3	0,89	**VKE28-209-KTT-B-GA47/70**
28,575	+0,9 +0,6	*1 1/8*	80	36,5	34 500	19 800	1 030	14	0,62	**GVK102-208-KTT-B-AH10**
30	+0,13 0	–	110	49,2	56 000	36 000	1 870	14,3	2,02	**VKE30-212-KTT-B-2C**
	+0,9 +0,6		100	36	46 000	29 000	1 520	14,3	1,23	**GVKE30-211-KTT-B-AS2/V**
31,75	+0,9 +0,6	*1 1/4*	85	36,5	34 500	20 400	1 060	14,3	0,72	**GVK104-209-KTT-B**
38	+0,9 +0,6	–	100	55,2	46 000	29 000	1 520	14,3	1,42	**VKE38-211-KTT-B-GA47/70-AH01**
38,1	+0,9 +0,6	*1 1/2*	100	36	46 000	29 000	1 520	14,3	1,08	**GVK108-211-KTT-B-AS2/V**
39,6875	+0,3 0	*1 9/16*	100	36	46 000	29 000	1 520	14,3	1,07	**GVK109-211-KTT-B**

medias *https://www.schaeffler.de/std/1F9A*

[1] Factor f_0 for determining equivalent bearing load ➤*1477*|▦*22*.

[2] Dimension for flinger shield.

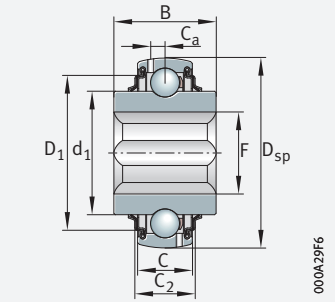

GVKE..-KRR-B-AS2/V-AH

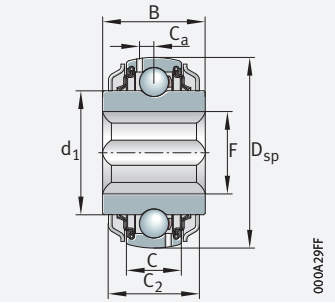

GVKE..-KRR-B-2C-AS2/V-AH

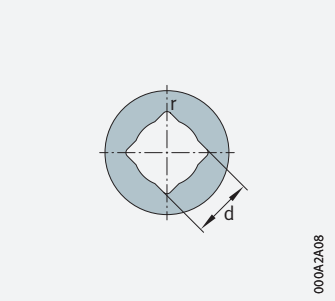

Design of bore

Width across flats of shaft d			Dimensions						
			C	C_2	d_1	F	D_1	C_a	r
mm		inch							
16,3	+0,2 0	–	15	16,5	33,8	22,4	42,5	3,9	0,7
	+0,2 0		15	24,8[2)]	33,8	22,4	–	3,9	0,7
25,4	+0,9 +0,6	*1*	18	25,2	52,3	33,8	68,4	–	2,5
	+0,9 +0,6		21	28,1	52,3	35,4	68,3	6,4	2,5
28	+0,9 +0,6	–	22	25,4	57,9	37,5	71,7	–	2,5
28,575	+0,9 +0,6	*1 1/8*	18	25	52,3	38,3	67,8	5,8	2,5
30	+0,13 0	–	24	45,4[2)]	74,8	41,2	–	–	2,5
	+0,9 +0,6		25	27,4	69,7	40,3	85,3	7,1	2,5
31,75	+0,9 +0,6	*1 1/4*	22	26,3	57,9	36,4	72,2	6,4	2,5
38	+0,9 +0,6	–	25	27,4	69,7	51,8	85,3	–	2,5
38,1	+0,9 +0,6	*1 1/2*	25	27,4	69,7	43,9	85,3	7,1	2,5
39,6875	+0,3 0	*1 9/16*	25	28,9	69,8	55,1	85,8	7	2,5

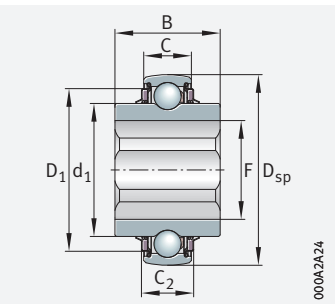

VK..-KTT-B(-AH),
VKE..-KTT-B-G47/70(-AH)

Self-aligning deep groove ball bearings

Spherical outside surface of outer ring
Hexagonal bore

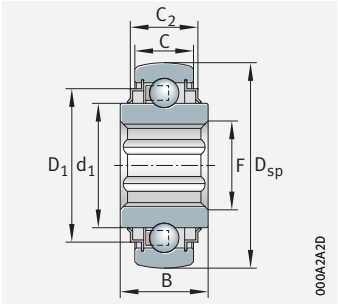

SK..-KRR-B(-L402/70)(-AH), SKE..-KRR-B

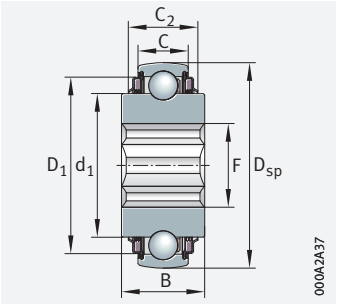

SK..-KTT-B(-L402/70)(-AH)

d = 16,1 – 38,1 mm

Main dimensions					Basic load ratings		Fatigue limit load	Factor[1]	Mass	Designation
d			D_{sp}	B	dyn. C_r	stat. C_{0r}	C_{ur}	f_0	m	➤*1473*|*1.12* ➤*1474*|*1.13*
mm		inch			N	N	N		≈ kg	
16,1	+0,15 +0,05	–	47	17,7	13 600	6 600	345	13,1	0,12	**SK010-204-KRR-B**
17	+0,15 +0,05	–	47	17,7	13 600	6 600	345	13,1	0,12	**SKE17-204-KRR-B**
22,225	+0,15 +0,05	7/8	52	25,4	14 900	7 800	410	13,8	0,2	**SK014-205-KRR-B**
	+0,15 +0,05		52	25,4	14 900	7 800	410	13,8	0,18	**SK014-205-KTT-B-L402/70**
25,4	+0,15 +0,03	1	62	24	20 700	11 300	590	13,8	0,32	**SK100-206-KRR-B-AH11**
28,575	+0,13 0	1 1/8	72	25	27 500	15 300	800	13,8	0,38	**SK102-207-KRR-B-L402/70-AH11**
	+0,175 +0,03		72	37,7	27 500	15 300	800	13,8	0,45	**SK102-207-KRR-B-AH10**
31,75	+0,15 +0,05	1 1/4	72	25	27 500	15 300	800	13,8	0,35	**SK104-207-KRR-B-L402/70-AH12**
	+0,15 +0,05		80	36,5	34 500	19 800	1 030	14	0,65	**SK104-208-KTT-B-AH10**
	+0,15 +0,05		80	36,5	34 500	19 800	1 030	14	0,6	**SK104-208-KTT-B-L402/70-AH10**
	+0,15 +0,05		72	37,9	27 500	15 300	800	13,8	0,45	**SK104-207-KTT-B-L402/70**
	+0,15 +0,05		72	37,9	27 500	15 300	800	13,8	0,48	**SK104-207-KTT-B**
	+0,15 +0,05		90	36,5	37 500	23 200	1 210	14,3	0,98	**SK104-210-KTT-B-L402/70**
34,925	+0,15 0	1 3/8	80	36,5	34 500	19 800	1 030	14	0,59	**SK106-208-KRR-B-L402/70**
38,1	+0,12 0	1 1/2	85	30	34 500	20 400	1 060	14,3	0,59	**SK108-209-KRR-B-L402/70-AH11**
	+0,12 0		90	30	37 500	23 200	1 210	14,3	0,78	**SK108-210-KRR-B**
	+0,1 0		90	32	37 500	23 200	1 210	14,3	0,75	**SK108-210-KRR-B-AH01**

medias *https://www.schaeffler.de/std/1F9A*

[1] Factor f_0 for determining equivalent bearing load ➤*1477*|▦*22*.

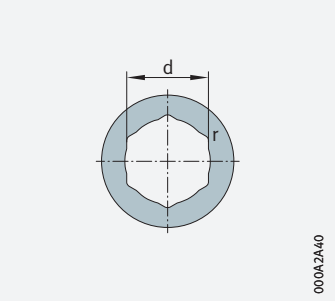

Design of bore

Width across flats of shaft d			Dimensions					
			C	C_2	d_1	F	D_1	r
mm		inch						
16,1	+0,15 +0,05	–	14	–	27,6	19,7	–	0,13
17	+0,15 +0,05	–	14	–	28,7	20,2	–	0,13
22,225	+0,15 +0,05	7/8	15	16,7	33,8	26,2	42,6	0,13
	+0,15 +0,05		15	19	33,8	26,6	42,5	0,12
25,4	+0,15 +0,03	1	16	18,7	40,2	30,5	52	0,13
28,575	+0,13 0	1 1/8	17	18,7	46,8	34,2	60	0,25
	+0,175 +0,03		17	20,5	46,8	38	60,3	0,25
31,75	+0,15 +0,05	1 1/4	17	18,7	46,8	38	60	0,12
	+0,15 +0,05		18	25	52,3	38	68,4	0,12
	+0,15 +0,05		18	25	52,3	38	68,4	0,12
	+0,15 +0,05		19	22,7	46,8	37,2	60	0,13
	+0,15 +0,05		19	23,7	46,8	38	60	0,12
	+0,15 +0,05		22	25,5	62,8	36,8	77,2	0,12
34,925	+0,15 0	1 3/8	20,9	22,4	52,3	41,5	67,7	0,12
38,1	+0,12 0	1 1/2	19	23,9	57,9	45,1	71,7	0,13
	+0,12 0		22	26	62,8	43,6	76,7	0,13
	+0,1 0		22	27,1	62,8	43,7	77,2	0,13

Deep groove ball bearings with extended inner ring

Cylindrical outside surface of outer ring
Hexagonal bore

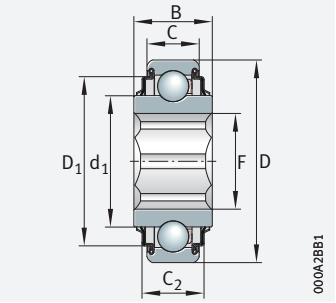

SK..-KRR(-L402/70)(-AH)

d = 22,225 – 44,45 mm

Main dimensions					Basic load ratings		Fatigue limit load	Factor[1]	Mass	Designation
d			D	B	dyn. C_r	stat. C_{0r}	C_{ur}	f_0	m	➤*1473*|*1.12* ➤*1474*|*1.13*
mm		inch			N	N	N		≈ kg	
22,225	+0,15 +0,05	7/8	52	25,4	14 900	7 800	410	13,8	0,18	**SK014-205-KRR**
25,4	+0,15 +0,05	1	62	24	20 700	11 300	590	13,8	0,27	**SK100-206-KRR-AH11**
31,75	+0,15 +0,05	1 1/4	72	25	27 500	15 300	800	13,8	0,35	**SK104-207-KRR-L402/70-AH12**
	+0,15 +0,05		80	36,5	34 500	19 800	1 030	14	0,62	**SK104-208-KTT-L402/70-AH10**
44,45	+0,127 0	1 3/4	130	48	87 000	52 000	2 700	13,1	2,62	**SK112-312-KTT-L402/70**

medias *https://www.schaeffler.de/std/1F9A*

[1] Factor f_0 for determining equivalent bearing load ➤*1477*|▦*22*.

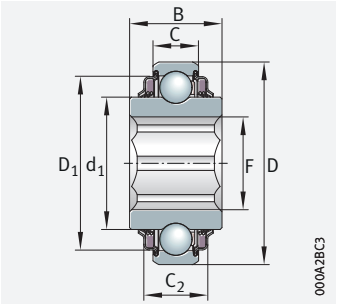

SK..-KTT-L402/70(-AH)

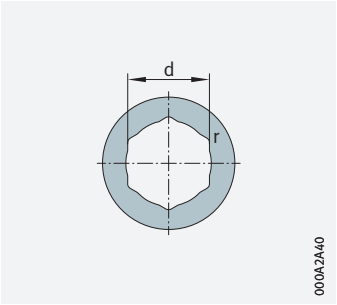

Design of bore

Width across flats of shaft d			Dimensions					
			C	C_2	d_1	F	D_1	r
mm		inch						
22,225	+0,15 +0,05	7/8	15	16,5	33,8	26,5	42,5	0,12
25,4	+0,15 +0,05	1	16	19	40,2	30	52	0,12
31,75	+0,15 +0,05	1 1/4	17	18,7	46,8	38	60	0,12
	+0,15 +0,05		18	25	52,3	38	68,4	0,12
44,45	+0,127 0	1 3/4	33	41,3	79,4	51,6	108,9	0,13

Radial insert ball bearings with rubber interliner

Spherical or cylindrical outside surface of interliner

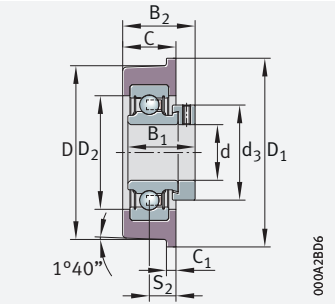

CRB..-XL

d = 12 – 50 mm

Main dimensions				Basic load ratings		Fatigue limit load	Factor[1]	Mass	Designation ➤1473|1.12 ➤1474|1.13 X-life➤1441	
d	D	B_1	d_3 max.	dyn. C_r N	stat. C_{0r} N	C_{ur} N	f_0	m ≈ kg	Unit[2]	Radial insert ball bearing[3]
12	47,3	28,6	28,4	10 100	4 750	248	13,1	0,15	**RABRB12/47-XL-FA106**	RAE12-XL-NPP-B-FA106
15	47,3	28,6	28,4	10 100	4 750	248	13,1	0,15	**RABRB15/47-XL-FA106**	RAE15-XL-NPP-B-FA106
	65,1	28,6	28,4	10 100	4 750	248	13,1	0,18	**RCSMB15/65-XL-FA106**	RAE15-XL-NPP-FA106
17	65,1	28,6	28,4	10 100	4 750	248	13,1	0,18	**RCSMB17/65-XL-FA106**	RAE17-XL-NPP-FA106
20	46	24,5	30	10 000	5 000	260	13,9	0,14	**RCRA20/46-XL-FA106**	RALE20-XL-NPP-FA106
	52,3	31	33	13 600	6 600	345	13,1	0,2	**RABRB20/52-XL-FA106**	RAE20-XL-NPP-B-FA106
	65,1	31	33	13 600	6 600	345	13,1	0,22	**RCSMB20/65-XL-FA106**	RAE20-XL-NPP-FA106
	77,5	31	33	13 600	6 600	345	13,1	0,3	**CRB20/76-XL**	RAE20-XL-NPP
	83,6	31	33	13 600	6 600	345	13,1	0,3	**CRB20/83-XL**	RAE20-XL-NPP
25	57,3	31	37,5	14 900	7 800	410	13,8	0,21	**RCRB25/57-XL-FA106**	RAE25-XL-NPP-FA106
	62,2	31	37,5	14 900	7 800	410	13,8	0,24	**RABRB25/62-XL-FA106**	RAE25-XL-NPP-B-FA106
	65,1	31	37,5	14 900	7 800	410	13,8	0,24	**RCSMB25/65-XL-FA106**	RAE25-XL-NPP-FA106
	71,5	31	37,5	14 900	7 800	410	13,8	0,32	**CRB25/70-XL**	RAE25-XL-NPP
	73	31	37,5	14 900	7 800	410	13,8	0,32	**CRB25/72-XL**	RAE25-XL-NPP
	83,6	31	37,5	14 900	7 800	410	13,8	0,32	**CRB25/83-XL**	RAE25-XL-NPP
30	62,2	26,5	42,5	14 100	8 300	430	14,8	0,3	**RABRA30/62-XL-FA106**	RALE30-XL-NPP-B-FA106
	65,1	26,5	42,5	14 100	8 300	430	14,8	0,32	**RCSMA30/65-XL-FA106**	RALE30-XL-NPP-FA106
	72,2	35,8	44	20 700	11 300	590	13,8	0,38	**RABRB30/72-XL-FA106**	RAE30-XL-NPP-B-FA106
	83,6	35,8	44	20 700	11 300	590	13,8	0,41	**CRB30/83-XL**	RAE30-XL-NPP
	93	35,8	44	20 700	11 300	590	13,8	0,41	**CRB30/92-XL**	RAE30-XL-NPP
35	80,2	39	55	27 500	15 300	800	13,8	0,62	**RABRB35/80-XL-FA106**	RAE35-XL-NPP-B-FA106
	112,3	39	55	27 500	15 300	800	13,8	0,61	**CRB35/110-XL**	RAE35-XL-NPP
40	85	43,8	58	34 500	19 800	1 030	14	0,73	**RABRB40/85-XL-FA106**	RAE40-XL-NPP-B-FA106
50	100,2	43,8	69	37 500	23 200	1 210	14,3	0,92	**RABRB50/100-XL-FA106**	RAE50-XL-NPP-B-FA106

medias *https://www.schaeffler.de/std/1F9A*

[1] Factor f_0 for determining equivalent bearing load ➤*1477*|▦*22*.

[2] Operating temperature from –20 °C to +85 °C.

[3] Permissible speeds of radial insert ball bearings ➤*1464*.

[4] Also available by agreement in NBR80.

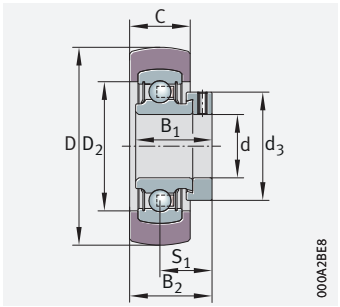

RABRA..-XL-FA106, RABRB..-XL-FA106

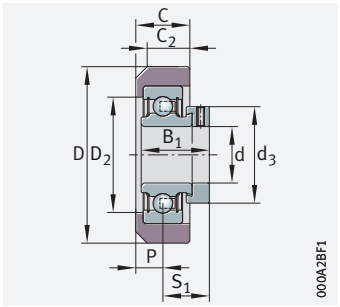

RCRA..-XL-FA106, RCRB..-XL-FA106

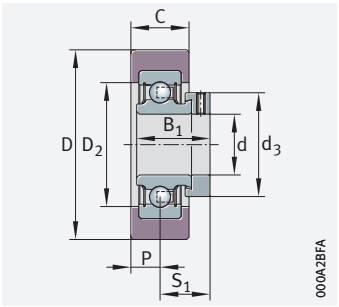

RCSMA..-XL-FA106, RCSMB..-XL-FA106

Dimensions										Rubber interliner	
										Hardness	Load carrying capacity
d	D_1	C	C_2	C_1	S_1	D_2	P	S_2	B_2	Shore A	C_G
										°	N
12	–	17,6	–	–	22,1	33,5	–	–	30,9	70	840
15	–	18	–	–	22,1	33,5	–	–	31,1	70	840
	–	25,4	–	–	22,1	35	12,7	–	–	70	900
17	–	25,4	–	–	22,1	35	12,7	–	–	70	900
20	–	18,3	16	–	18,6	35	10	–	–	70	900
	–	17,6	–	–	23,5	39	–	–	32,3	70	1 160
	–	25,4	–	–	23,5	40	12,7	–	–	70	1 200
	80	25,4	–	5	–	40	–	12,5	36	80	750
	87,4	25,4	–	4,8	–	40	–	12,7	36,2	80	750
25	–	19,8	17,5	–	23,5	44,5	9,8	–	–	70	1 400
	–	20,8	–	–	23,5	44,5	–	–	33,9	70[4)]	1 390
	–	25,4	–	–	23,5	46	12,7	–	–	70	1 400
	76	25	–	5	–	46	–	12,5	36	80	1 000
	80	25	–	5	–	46	–	12,5	36	80	1 000
	87,4	25,4	–	4,8	–	46	–	12,7	36,2	80	1 000
30	–	20,8	–	–	20	47	–	–	30,4	70	1 390
	–	25,4	–	–	20	47,6	15	–	–	70	1 400
	–	23	–	–	26,7	54	–	–	38,2	70[4)]	1 980
	87,4	28	–	4,8	–	56	–	14	40,7	80	1 400
	98	28	–	5	–	56	–	14	40,7	80	1 400
35	–	24	–	–	29,4	62	–	–	41,4	70	2 700
	120	30	–	5	–	64	–	15	44,4	80	1 500
40	–	27	–	–	32,7	70	–	–	46,3	70[4)]	3 500
50	–	30	–	–	32,7	80	–	–	47,7	70[4)]	4 100

Radial insert ball bearings with steel aligning ring

With eccentric locking collar or with bore for fit

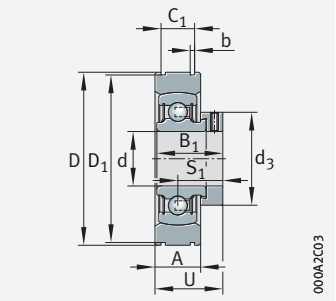

PE..-XL

d = 20 – 40 mm

Main dimensions				Basic load ratings		Fatigue limit load	Factor[1]	Mass	Designation ➤1473|1.12 ➤1474|1.13 X-life➤1441	
d	D[2]	B_1	d_3 max.	dyn. C_r N	stat. C_{0r} N	C_{ur} N	f_0	m ≈ kg	Unit[3]	Radial insert ball bearing
20	55	31	33	13 600	6 600	345	13,1	0,24	**PE20-XL**	**RAE20-XL-NPP-B**
25	62	31	37,5	14 900	7 800	410	13,8	0,31	**PE25-XL**	**RAE25-XL-NPP-B**
30	72	35,8	44	20 700	11 300	590	13,8	0,48	**PE30-XL**	**RAE30-XL-NPP-B**
35	80	39	55	27 500	15 300	800	13,8	0,69	**PE35-XL**	**RAE35-XL-NPP-B**
40	90	43,8	58	34 500	19 800	1 030	14	0,88	**PE40-XL**	**RAE40-XL-NPP-B**

Main dimensions			Basic load ratings		Fatigue limit load	Factor[1]	Mass	Designation ➤1473|1.12 ➤1474|1.13 X-life➤1441	
d	D[2]	B	dyn. C_r N	stat. C_{0r} N	C_{ur} N	f_0	m ≈ kg	Unit[5]	Radial insert ball bearing
20	55	14	13 600	6 600	345	13,1	0,19	**BE20-XL**	**204-XL-NPP-B**
25	62	15	14 900	7 800	410	13,8	0,25	**BE25-XL**	**205-XL-NPP-B**
30	72	16	20 700	11 300	590	13,8	0,37	**BE30-XL**	**206-XL-NPP-B**
35	80	17	27 500	15 300	800	13,8	0,45	**BE35-XL**	**207-XL-NPP-B**
40	90	18	34 500	19 800	1 030	14	0,63	**BE40-XL**	**208-XL-NPP-B**

medias *https://www.schaeffler.de/std/1F9A*

1) Factor f_0 for determining equivalent bearing load ➤*1477*|▤*22*.

2) Before splitting, dimension D corresponds to tolerance class Normal in accordance with ISO 492.

3) Permissible speeds of radial insert ball bearings RAE..NPP-B ➤*1464*.

4) Annular slot tolerances to DIN 616 (for snap rings to DIN 5417).

5) Permissible speeds of self-aligning deep groove ball bearings 2..NPP-B ➤*1524*.

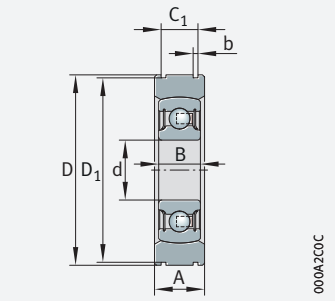

BE..-XL

Dimensions

d	A	C_1 [4] +0,2	b [4] +0,3	D_1 [4] −0,5	S_1	U
20	16	11,2	1,35	52,6	23,5	31,5
25	17	11,2	1,9	59,6	23,5	32
30	21	14,4	1,9	68,8	26,8	37,2
35	21	14,4	1,9	76,8	29,5	40
40	25	15,4	2,7	86,8	32,8	45,2

Dimensions

d	A	C_1 [4] +0,2	b [4] +0,3	D_1 [4] −0,5	U
20	16	11,2	1,35	52,6	–
25	17	11,2	1,9	59,6	–
30	21	14,4	1,9	68,8	–
35	21	14,4	1,9	76,8	–
40	25	15,4	2,7	86,8	–

Corrosion-resistant radial insert ball bearings, VA design

With grub screws in inner ring
Spherical outside surface of outer ring

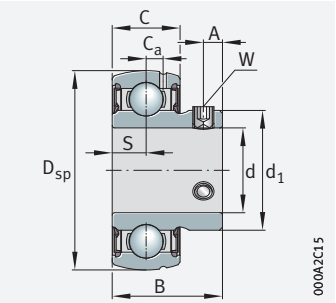

SUB

d = 20 – 50 mm

Main dimensions			Basic load ratings		Fatigue limit load	Factor[1]	Mass	Designation[2][3]
d	D_{sp}	B	dyn. C_r	stat. C_{0r}	C_{ur}	f_0	m	➤*1473*|*1.12* ➤*1474*|*1.13*
			N	N	N		≈ kg	
20	47	26	12 300	6 300	310	13,1	0,14	**SUB204**
25	52	28	13 400	7 500	370	13,8	0,17	**SUB205**
30	62	30,5	18 700	10 700	530	13,8	0,26	**SUB206**
35	72	35,45	24 600	14 600	720	13,8	0,41	**SUB207**
40	80	39,45	31 500	18 900	930	14	0,52	**SUB208**
45	85	41,5	31 500	19 400	960	14,3	0,6	**SUB209**
50	90	43,5	33 500	22 100	1 090	14,3	0,67	**SUB210**

medias *https://www.schaeffler.de/std/1F9A*

[1] Factor f_0 for determining equivalent bearing load ➤*1477*|▦*22*.

[2] Speed limits for radial insert ball bearings ➤*1464*.

[3] Lubrication groove and two lubrication holes in the outer ring.

Dimensions						Width across flats
d	C	S	d_1	C_a	A	W
20	16	8	29,05	4	4,5	2,5
25	17	8,5	34,03	4,15	5	2,5
30	19	9,5	40,31	5	5,8	3
35	20	10	47,4	5,7	6,1	3
40	21	10,5	52,83	5,9	8	4
45	22	11	57,3	6,5	8	4
50	23	11,5	62,92	6,5	9	5



Corrosion-resistant radial insert ball bearings, VA design

With grub screws in inner ring
Spherical outside surface of outer ring
With extended inner ring

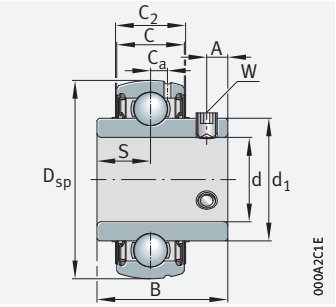

SUC

d = 12 – 50 mm

Main dimensions			Basic load ratings		Fatigue limit load	Factor[1]	Mass	Designation[2]
d	D_{sp}	B	dyn. C_r	stat. C_{0r}	C_{ur}	f_0	m	➤*1473*|*1.12* ➤*1474*|*1.13*
			N	N	N		≈ kg	
12	40	25	9 200	4 550	224	13,1	0,11	**SUC201**[3]
15	40	25	9 200	4 550	224	13,1	0,1	**SUC202**[3]
17	40	25	9 200	4 550	224	13,1	0,08	**SUC203**[3]
20	47	31	12 300	6 300	310	13,1	0,16	**SUC204**[4]
25	52	34,1	13 400	7 500	370	13,8	0,2	**SUC205**[4]
30	62	38,1	18 700	10 700	530	13,8	0,31	**SUC206**[4]
35	72	42,9	24 600	14 600	720	13,8	0,47	**SUC207**[4]
40	80	49,2	31 500	18 900	930	14	0,62	**SUC208**[4]
45	85	49,2	31 500	19 400	960	14,3	0,67	**SUC209**[4]
50	90	51,6	33 500	22 100	1 090	14,3	0,78	**SUC210**[4]

medias *https://www.schaeffler.de/std/1F9A*

1) Factor f_0 for determining equivalent bearing load ➤*1477*|▦*22*.
2) Speed limits for radial insert ball bearings ➤*1464*.
3) Two lubrication holes in the outer ring.
4) Lubrication groove and two lubrication holes in the outer ring.

Dimensions							Width across flats
d	C	C_2 max.	S	d_1	C_a	A	W
12	12	12,6	9,6	23,9	3,4	4	2,5
15	12	12,6	9,6	23,9	3,4	4	2,5
17	12	12,6	9,6	23,9	3,4	4	2,5
20	16	16,6	12,7	29,05	4	5	2,5
25	17	17,6	14,3	34,03	4,15	5	2,5
30	19	19,6	15,9	40,31	5	6	3
35	20	20,6	17,5	47,4	5,7	6,5	3
40	21	21,6	19	52,83	5,9	8	4
45	22	22,6	19	57,3	6,5	8	4
50	23	23,6	19	62,92	6,5	9	5



Corrosion-resistant radial insert ball bearings, VA design

With eccentric locking collar
Spherical outside surface of outer ring

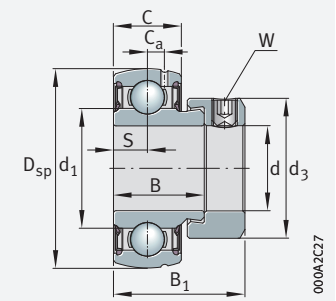

SUG

d = 20 – 50 mm

Main dimensions				Basic load ratings		Fatigue limit load	Factor[1]	Mass	Designation[2][3]
d	D_{sp}	B_1	d_3 max.	dyn. C_r N	stat. C_{0r} N	C_{ur} N	f_0	m ≈ kg	➤*1473*|*1.12* ➤*1474*|*1.13*
20	47	31,5	33	12 300	6 300	310	13,1	0,17	**SUG204**
25	52	32	37,5	13 400	7 500	370	13,8	0,2	**SUG205**
30	62	36,3	44	18 700	10 700	530	13,8	0,31	**SUG206**
35	72	39,5	55	24 600	14 600	720	13,8	0,51	**SUG207**
40	80	43,8	58	31 500	18 900	930	14	0,6	**SUG208**
45	85	43,8	63	31 500	19 400	960	14,3	0,7	**SUG209**
50	90	44,3	69	33 500	22 100	1 090	14,3	0,77	**SUG210**

medias *https://www.schaeffler.de/std/1F9A*

[1] Factor f_0 for determining equivalent bearing load ➤*1477*|▦*22*.

[2] Speed limits for radial insert ball bearings ➤*1464*.

[3] Lubrication groove and two lubrication holes in the outer ring.

Dimensions							Width across flats
d	D_{sp}	C	B	S	d_1	C_a	W
20	47	16	21,9	8	29,05	4	3
25	52	17	22,4	8,5	34,03	4,15	3
30	62	19	24,3	9,5	40,31	5	4
35	72	20	25,9	10	47,4	5,7	5
40	80	21	30,2	11	52,83	5,9	5
45	85	22	30,2	11	57,3	6,5	5
50	90	23	30,7	11	62,92	6,5	5



Corrosion-resistant radial insert ball bearings, with Corrotect coating

With eccentric locking collar
Spherical outside surface of outer ring

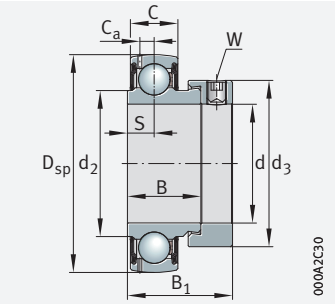

GRAE..-XL-NPP-B-FA125

d = 20 – 60 mm

Main dimensions				Basic load ratings		Fatigue limit load	Factor[1]	Mass	Designation[2]
d	D_{sp}	B_1	d_3 max.	dyn. C_r N	stat. C_{0r} N	C_{ur} N	f_0	m ≈ kg	➤*1473*|*1.12* ➤*1474*|*1.13* X-life➤*1441*
20	47	31	33	13 600	6 600	345	13,1	0,16	**GRAE20-XL-NPP-B-FA125**
	47	43,7	33	13 600	6 600	345	13,1	0,19	**GE20-XL-KRR-B-FA125**
25	52	31	37,5	14 900	7 800	410	13,8	0,19	**GRAE25-XL-NPP-B-FA125**
	52	44,5	37,5	14 900	7 800	410	13,8	0,25	**GE25-XL-KRR-B-FA125**
30	62	35,8	44	20 700	11 300	590	13,8	0,32	**GRAE30-XL-NPP-B-FA125**
	62	48,5	44	20 700	11 300	590	13,8	0,39	**GE30-XL-KRR-B-FA125**
35	72	39	55	27 500	15 300	800	13,8	0,48	**GRAE35-XL-NPP-B-FA125**
	72	51,3	55	27 500	15 300	800	13,8	0,55	**GE35-XL-KRR-B-FA125**
40	80	43,8	58	34 500	19 800	1 030	14	0,62	**GRAE40-XL-NPP-B-FA125**
	80	56,5	58	34 500	19 800	1 030	14	0,73	**GE40-XL-KRR-B-FA125**
45	85	43,8	63	34 500	20 400	1 060	14,3	0,69	**GRAE45-XL-NPP-B-FA125**
	85	56,5	63	34 500	20 400	1 060	14,3	0,83	**GE45-XL-KRR-B-FA125**
50	90	43,8	69	37 500	23 200	1 210	14,3	0,77	**GRAE50-XL-NPP-B-FA125**
	90	62,8	69	37 500	23 200	1 210	14,3	0,99	**GE50-XL-KRR-B-FA125**
60	110	53,1	84	56 000	36 000	1 870	14,3	1,4	**GRAE60-XL-NPP-B-FA125**

medias *https://www.schaeffler.de/std/1F9A*

[1] Factor f_0 for determining equivalent bearing load ➤*1477*|▦*22*.

[2] Speed limits for radial insert ball bearings ➤*1464*.

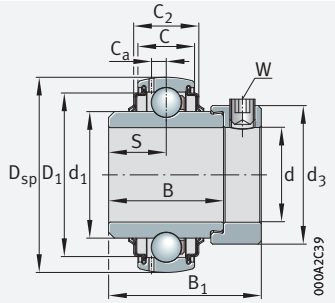

GE..-XL-KRR-B-FA125

Dimensions									Width across flats
d	C	C_2	B	S	d_1	d_2	D_1	C_a	W
20	14	–	21,4	7,5	–	26,9	–	4	3
	14	16,6	34,1	17,1	27,6	–	37,4	4	3
25	15	–	21,4	7,5	–	30,5	–	3,9	3
	15	16,7	34,9	17,5	33,8	–	42,5	4,1	3
30	18	–	23,8	9	–	37,4	–	4,7	4
	18	20,7	36,5	18,3	40,2	–	52	4,7	4
35	19	–	25,4	9,5	–	44,6	–	5,6	5
	19	22,5	37,7	18,8	46,8	–	60,3	5,6	5
40	21	–	30,2	11	–	49,4	–	6,4	5
	21	23,5	42,9	21,4	52,3	–	68,3	6,4	5
45	22	–	30,2	11	–	54,3	–	6,4	5
	22	26,4	42,9	21,4	57,9	–	72,3	6,4	5
50	22	–	30,2	11	–	59,4	–	6,9	5
	22	26,4	49,2	24,6	62,8	–	77,3	6,9	5
60	24	–	37,1	13,5	–	72	–	7,2	5

Black Series, radial insert ball bearings in accordance with JIS

With grub screws in inner ring
Spherical outside surface of outer ring

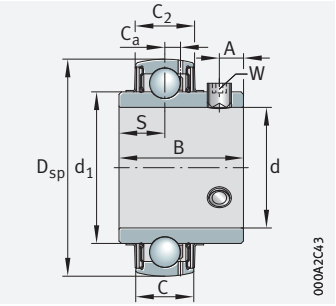

UC

d = 12 – 35 mm

Main dimensions				Basic load ratings		Fatigue limit load	Factor[1]	Mass	Designation[2]
d		D_{sp}	B	dyn. C_r	stat. C_{0r}	C_{ur}	f_0	m	➤*1473*|*1.12* ➤*1474*|*1.13*
mm	inch			N	N	N		≈ kg	
12	–	47	31	13 600	6 600	345	13,1	0,2	**UC201**
12,7	*1/2*	47	31	13 600	6 600	345	13,1	0,2	**UC201-08**
14,288	*9/16*	47	31	13 600	6 600	345	13,1	0,19	**UC202-09**
15	–	47	31	13 600	6 600	345	13,1	0,18	**UC202**
15,875	*5/8*	47	31	13 600	6 600	345	13,1	0,18	**UC202-10**
17	–	47	31	13 600	6 600	345	13,1	0,17	**UC203**
17,463	*11/16*	47	31	13 600	6 600	345	13,1	0,17	**UC203-11**
19,05	*3/4*	47	31	13 600	6 600	345	13,1	0,16	**UC204-12**
20	–	47	31	13 600	6 600	345	13,1	0,15	**UC204**
20,638	*13/16*	52	34,1	14 900	7 800	410	13,8	0,24	**UC205-13**
22,225	*7/8*	52	34,1	14 900	7 800	410	13,8	0,22	**UC205-14**
23,813	*15/16*	52	34,1	14 900	7 800	410	13,8	0,21	**UC205-15**
25	–	52	34,1	14 900	7 800	410	13,8	0,2	**UC205**
25,4	*1*	52	34,1	14 900	7 800	410	13,8	0,19	**UC205-16**
26,988	*1 1/16*	62	38,1	20 700	11 300	590	13,8	0,35	**UC206-17**
28,575	*1 1/8*	62	38,1	20 700	11 300	590	13,8	0,33	**UC206-18**
30	–	62	38,1	20 700	11 300	590	13,8	0,31	**UC206**
30,163	*1 3/16*	62	38,1	20 700	11 300	590	13,8	0,31	**UC206-19**
31,75	*1 1/4*	62	38,1	20 700	11 300	590	13,8	0,29	**UC206-20**
31,75	*1 1/4*	72	42,9	27 500	15 300	800	13,8	0,52	**UC207-20**
33,338	*1 5/16*	72	42,9	27 500	15 300	800	13,8	0,5	**UC207-21**
34,925	*1 3/8*	72	42,9	27 500	15 300	800	13,8	0,47	**UC207-22**
35	–	72	42,9	27 500	15 300	800	13,8	0,47	**UC207**

medias *https://www.schaeffler.de/std/1F9A*

[1] Factor f_0 for determining equivalent bearing load ➤*1477*|▦*22*.

[2] Speed limits for radial insert ball bearings ➤*1464*.

Dimensions								Width across flats	
d		C	C_2	S	d_1	C_a	A	W	
mm	inch							mm	inch
12	–	17	16,8	12,7	27,56	4,2	5	3	–
12,7	$^1/_2$	17	16,8	12,7	27,56	4,2	5	–	$^1/_8$
14,288	$^9/_{16}$	17	16,8	12,7	27,56	4,2	5	–	$^1/_8$
15	–	17	16,8	12,7	27,56	4,2	5	3	–
15,875	$^5/_8$	17	16,8	12,7	27,56	4,2	5	–	$^1/_8$
17	–	17	16,8	12,7	27,56	4,2	5	3	–
17,463	$^{11}/_{16}$	17	16,8	12,7	27,56	4,2	5	–	$^1/_8$
19,05	$^3/_4$	17	16,8	12,7	27,56	4,2	5	–	$^1/_8$
20	–	17	16,8	12,7	27,56	4,2	5	3	–
20,638	$^{13}/_{16}$	17	17,6	14,3	33,83	4,2	5	–	$^1/_8$
22,225	$^7/_8$	17	17,6	14,3	33,83	4,2	5	–	$^1/_8$
23,813	$^{15}/_{16}$	17	17,6	14,3	33,83	4,2	5	–	$^1/_8$
25	–	17	17,6	14,3	33,83	4,2	5	3	–
25,4	1	17	17,6	14,3	33,83	4,2	5	–	$^1/_8$
26,988	$1^1/_{16}$	19	19,6	15,9	40,2	5	5	–	$^1/_8$
28,575	$1^1/_8$	19	19,6	15,9	40,2	5	5	–	$^1/_8$
30	–	19	19,6	15,9	40,2	5	5	3	–
30,163	$1^3/_{16}$	19	19,6	15,9	40,2	5	5	–	$^1/_8$
31,75	$1^1/_4$	19	19,6	15,9	40,2	5	5	–	$^1/_8$
31,75	$1^1/_4$	20	20,6	17,5	46,84	5,7	7	–	$^5/_{32}$
33,338	$1^5/_{16}$	20	20,6	17,5	46,84	5,7	7	–	$^5/_{32}$
34,925	$1^3/_8$	20	20,6	17,5	46,84	5,7	7	–	$^5/_{32}$
35	–	20	20,6	17,5	46,84	5,7	7	4	–



Black Series, radial insert ball bearings in accordance with JIS

With grub screws in inner ring
Spherical outside surface of outer ring

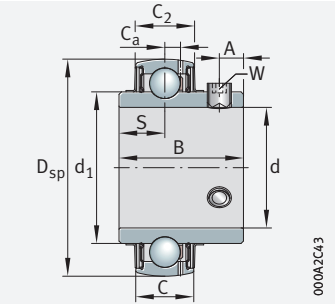

UC

d = 36,513 – 61,913 mm

Main dimensions				Basic load ratings		Fatigue limit load	Factor[1]	Mass	Designation[2]
d		D_{sp}	B	dyn. C_r	stat. C_{0r}	C_{ur}	f_0	m	➤*1473*|*1.12* ➤*1474*|*1.13*
mm	inch			N	N	N		≈ kg	
36,513	$1^{7}/_{16}$	72	42,9	27 500	15 300	800	13,8	0,44	**UC207-23**
38,1	$1^{1}/_{2}$	80	49,2	34 500	19 800	1 030	14	0,66	**UC208-24**
39,688	$1^{9}/_{16}$	80	49,2	34 500	19 800	1 030	14	0,63	**UC208-25**
40	–	80	49,2	34 500	19 800	1 030	14	0,62	**UC208**
41,275	$1^{5}/_{8}$	85	49,2	34 500	20 400	1 060	14,3	0,79	**UC209-26**
42,863	$1^{11}/_{16}$	85	49,2	34 500	20 400	1 060	14,3	0,75	**UC209-27**
44,45	$1^{3}/_{4}$	85	49,2	34 500	20 400	1 060	14,3	0,71	**UC209-28**
45	–	85	49,2	34 500	20 400	1 060	14,3	0,69	**UC209**
46,038	$1^{13}/_{16}$	90	51,6	37 500	23 200	1 210	14,3	0,92	**UC210-29**
47,625	$1^{7}/_{8}$	90	51,6	37 500	23 200	1 210	14,3	0,87	**UC210-30**
49,213	$1^{15}/_{16}$	90	51,6	37 500	23 200	1 210	14,3	0,82	**UC210-31**
50	–	90	51,6	37 500	23 200	1 210	14,3	0,8	**UC210**
50,8	*2*	90	51,6	37 500	23 200	1 210	14,3	0,77	**UC210-32**
50,8	*2*	100	55,6	46 000	29 000	1 520	14,3	1,22	**UC211-32**
52,388	$2^{1}/_{16}$	100	55,6	46 000	29 000	1 520	14,3	1,17	**UC211-33**
53,975	$2^{1}/_{8}$	100	55,6	46 000	29 000	1 520	14,3	1,11	**UC211-34**
55	–	100	55,6	46 000	29 000	1 520	14,3	1,07	**UC211**
55,563	$2^{3}/_{16}$	100	55,6	46 000	29 000	1 520	14,3	1,05	**UC211-35**
57,15	$2^{1}/_{4}$	110	65,1	56 000	36 000	1 870	14,3	1,62	**UC212-36**
58,738	$2^{5}/_{16}$	110	65,1	56 000	36 000	1 870	14,3	1,55	**UC212-37**
60	–	110	65,1	56 000	36 000	1 870	14,3	1,49	**UC212**
60,325	$2^{3}/_{8}$	110	65,1	56 000	36 000	1 870	14,3	1,48	**UC212-38**
61,913	$2^{7}/_{16}$	110	65,1	56 000	36 000	1 870	14,3	1,4	**UC212-39**

medias *https://www.schaeffler.de/std/1F9A*

[1] Factor f_0 for determining equivalent bearing load ➤*1477*|▦*22*.

[2] Speed limits for radial insert ball bearings ➤*1464*.

Dimensions								Width across flats	
d		C	C_2	S	d_1	C_a	A	W	
mm	inch							mm	inch
36,513	$1\,^{7}/_{16}$	20	20,6	17,5	46,84	5,7	7	–	$^{5}/_{32}$
38,1	$1\,^{1}/_{2}$	21	21,6	19	52,27	6,2	8	–	$^{5}/_{32}$
39,688	$1\,^{9}/_{16}$	21	21,6	19	52,27	6,2	8	–	$^{5}/_{32}$
40	–	21	21,6	19	52,27	6,2	8	4	–
41,275	$1\,^{5}/_{8}$	22	22,6	19	57,91	6,3	8	–	$^{5}/_{32}$
42,863	$1\,^{11}/_{16}$	22	22,6	19	57,91	6,3	8	–	$^{5}/_{32}$
44,45	$1\,^{3}/_{4}$	22	22,6	19	57,91	6,3	8	–	$^{5}/_{32}$
45	–	22	22,6	19	57,91	6,3	8	4	–
46,038	$1\,^{13}/_{16}$	24	24,6	19	62,84	6,5	10	–	$^{3}/_{16}$
47,625	$1\,^{7}/_{8}$	24	24,6	19	62,84	6,5	10	–	$^{3}/_{16}$
49,213	$1\,^{15}/_{16}$	24	24,6	19	62,84	6,5	10	–	$^{3}/_{16}$
50	–	24	24,6	19	62,84	6,5	10	5	–
50,8	2	24	24,6	19	62,84	6,5	10	–	$^{3}/_{16}$
50,8	2	25	25,6	22,2	69,77	7	10	–	$^{3}/_{16}$
52,388	$2\,^{1}/_{16}$	25	25,6	22,2	69,77	7	10	–	$^{3}/_{16}$
53,975	$2\,^{1}/_{8}$	25	25,6	22,2	69,77	7	10	–	$^{3}/_{16}$
55	–	25	25,6	22,2	69,77	7	10	5	–
55,563	$2\,^{3}/_{16}$	25	25,6	22,2	69,77	7	10	–	$^{3}/_{16}$
57,15	$2\,^{1}/_{4}$	27	27,6	25,4	76,48	7,4	10	–	$^{3}/_{16}$
58,738	$2\,^{5}/_{16}$	27	27,6	25,4	76,48	7,4	10	–	$^{3}/_{16}$
60	–	27	27,6	25,4	76,48	7,4	10	5	–
60,325	$2\,^{3}/_{8}$	27	27,6	25,4	76,48	7,4	10	–	$^{3}/_{16}$
61,913	$2\,^{7}/_{16}$	27	27,6	25,4	76,48	7,4	10	–	$^{3}/_{16}$



Black Series, radial insert ball bearings in accordance with JIS

With grub screws in inner ring
Spherical outside surface of outer ring

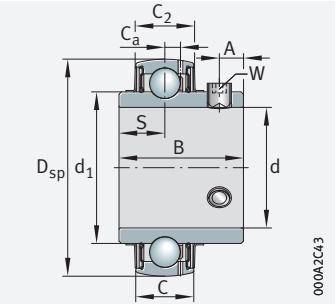

UC

d = 63,5 – 90 mm

Main dimensions				Basic load ratings		Fatigue limit load	Factor[1]	Mass	Designation[2]
d		D_{sp}	B	dyn. C_r	stat. C_{0r}	C_{ur}	f_0	m	➤*1473*|*1.12* ➤*1474*|*1.13*
mm	inch			N	N	N		≈ kg	
63,5	$2^1/_2$	120	65,1	61 000	40 000	2 090	14,3	1,79	**UC213-40**
65	–	120	65,1	61 000	40 000	2 090	14,3	1,72	**UC213**
65,088	$2^9/_{16}$	120	65,1	61 000	40 000	2 090	14,3	1,71	**UC213-41**
66,675	$2^5/_8$	125	74,6	66 000	44 000	2 300	14,4	2,17	**UC214-42**
68,263	$2^{11}/_{16}$	125	74,6	66 000	44 000	2 300	14,4	2,07	**UC214-43**
69,85	$2^3/_4$	125	74,6	66 000	44 000	2 300	14,4	1,97	**UC214-44**
70	–	125	74,6	66 000	44 000	2 300	14,4	1,96	**UC214**
71,438	$2^{13}/_{16}$	130	77,8	66 000	44 500	2 300	14,7	2,39	**UC215-45**
73,025	$2^7/_8$	130	77,8	66 000	44 500	2 300	14,7	2,28	**UC215-46**
74,613	$2^{15}/_{16}$	130	77,8	66 000	44 500	2 300	14,7	2,17	**UC215-47**
75	–	130	77,8	66 000	44 500	2 300	14,7	2,14	**UC215**
76,2	3	130	77,8	66 000	44 500	2 300	14,7	2,06	**UC215-48**
77,788	$3^1/_{16}$	140	82,6	76 000	54 000	2 700	14,6	2,88	**UC216-49**
79,375	$3^1/_8$	140	82,6	76 000	54 000	2 700	14,6	2,76	**UC216-50**
80	–	140	82,6	76 000	54 000	2 700	14,6	2,71	**UC216**
80,963	$3^3/_{16}$	140	82,6	76 000	54 000	2 700	14,6	2,63	**UC216-51**
82,55	$3^1/_4$	150	85,7	88 000	64 000	3 050	14,7	3,62	**UC217-52**
84,138	$3^5/_{16}$	150	85,7	88 000	64 000	3 050	14,7	3,48	**UC217-53**
85	–	150	85,7	88 000	64 000	3 050	14,7	3,41	**UC217**
87,313	$3^7/_{16}$	150	85,7	88 000	64 000	3 050	14,7	3,2	**UC217-55**
88,9	$3^1/_2$	160	96	102 000	72 000	3 350	14,5	4,2	**UC218-56**
90	–	160	96	102 000	72 000	3 350	14,5	4,08	**UC218**

medias *https://www.schaeffler.de/std/1F9A*

[1] Factor f_0 for determining equivalent bearing load ➤*1477*|▦*22*.

[2] Speed limits for radial insert ball bearings ➤*1464*.

Dimensions								Width across flats	
d		C	C_2	S	d_1	C_a	A	W	
mm	inch							mm	inch
63,5	$2^1/_2$	28	29,4	25,4	80,85	8,2	12	–	$^1/_4$
65	–	28	29,4	25,4	80,85	8,2	12	6	–
65,088	$2^9/_{16}$	28	29,4	25,4	80,85	8,2	12	–	$^1/_4$
66,675	$2^5/_8$	30	31,4	30,2	85,2	8,5	12	–	$^1/_4$
68,263	$2^{11}/_{16}$	30	31,4	30,2	85,2	8,5	12	–	$^1/_4$
69,85	$2^3/_4$	30	31,4	30,2	85,2	8,5	12	–	$^1/_4$
70	–	30	31,4	30,2	85,2	8,5	12	6	–
71,438	$2^{13}/_{16}$	32	33,4	33,3	90	8,5	12	–	$^1/_4$
73,025	$2^7/_8$	32	33,4	33,3	90	8,5	12	–	$^1/_4$
74,613	$2^{15}/_{16}$	32	33,4	33,3	90	8,5	12	–	$^1/_4$
75	–	32	33,4	33,3	90	8,5	12	6	–
76,2	3	32	33,4	33,3	90	8,5	12	–	$^1/_4$
77,788	$3^1/_{16}$	33	34,4	33,3	97	9,3	14	–	$^1/_4$
79,375	$3^1/_8$	33	34,4	33,3	97	9,3	14	–	$^1/_4$
80	–	33	34,4	33,3	97	9,3	14	6	–
80,963	$3^3/_{16}$	33	34,4	33,3	97	9,3	14	–	$^1/_4$
82,55	$3^1/_4$	35	36,4	34,1	104,09	10	14	–	$^1/_4$
84,138	$3^5/_{16}$	35	36,4	34,1	104,09	10	14	–	$^1/_4$
85	–	35	36,4	34,1	104,09	10	14	6	–
87,313	$3^7/_{16}$	35	36,4	34,1	104,09	10	14	–	$^1/_4$
88,9	$3^1/_2$	38	39,4	39,7	109,4	11	15	–	$^1/_4$
90	–	38	39,4	39,7	109,4	11	15	6	–

Black Series, radial insert ball bearings in accordance with JIS

With adapter sleeve
Spherical outside surface of outer ring

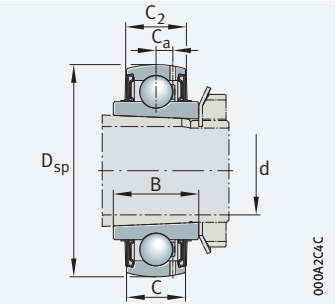

UK

d = 20 – 80 mm

Main dimensions			Basic load ratings		Fatigue limit load	Factor[1]	Mass	Designation[2]
d	D_{sp}	B	dyn. C_r N	stat. C_{0r} N	C_{ur} N	f_0	m ≈ kg	➤*1473*|*1.12* ➤*1474*|*1.13*
20	52	23	14 900	7 800	410	13,8	0,25	**UK205**
25	62	26	20 700	11 300	590	13,8	0,37	**UK206**
30	72	29	27 500	15 300	800	13,8	0,54	**UK207**
35	80	31	34 500	19 800	1 030	14	0,7	**UK208**
40	85	32	34 500	20 400	1 060	14,3	0,83	**UK209**
45	90	34	37 500	23 200	1 210	14,3	0,98	**UK210**
50	100	36	46 000	29 000	1 520	14,3	1,24	**UK211**
55	110	40	56 000	36 000	1 870	14,3	1,58	**UK212**
60	120	41	61 000	40 000	2 090	14,3	1,88	**UK213**
65	130	44,5	66 000	44 500	2 300	14,7	2,62	**UK215**
70	140	46	76 000	54 000	2 700	14,6	3,23	**UK216**
75	150	48	88 000	64 000	3 050	14,7	3,9	**UK217**
80	160	51	102 000	72 000	3 350	14,5	4,62	**UK218**

medias *https://www.schaeffler.de/std/1F9A*

[1] Factor f_0 for determining equivalent bearing load ➤*1477*|▦*22*.

[2] Speed limits for radial insert ball bearings ➤*1464*.

[3] Radial insert ball bearings UK are supplied with an adapter sleeve H..X.

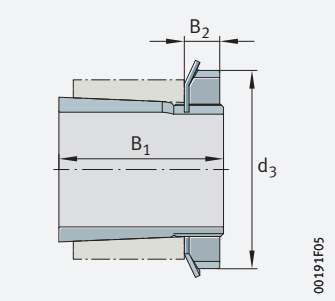

Complete adapter sleeve[3)]

Dimensions				Adapter sleeve Complete							
				Designation				Mass	Dimensions		
d	C	C_2	C_a	Adapter sleeve Complete	Sleeve	Locknut	Tab washer	m ≈ kg	B_1	B_2	d_3 max.
20	17	17,6	4,2	**H2305X**	A2305X	AN05	AW05X	0,1	35	8	38
25	19	19,6	5	**H2306X**	A2306X	AN06	AW06X	0,13	38	8	45
30	20	20,6	5,7	**H2307X**	A2307X	AN07	AW07X	0,18	43	9	52
35	21	21,6	6,2	**H2308X**	A2308X	AN08	AW08X	0,23	46	10	58
40	22	22,6	6,3	**H2309X**	A2309X	AN09	AW09X	0,31	50	11	65
45	24	24,6	6,5	**H2310X**	A2310X	AN10	AW10X	0,38	55	12	70
50	25	25,6	7	**H2311X**	A2311X	AN11	AW11X	0,45	59	12	75
55	27	27,6	7,4	**H2312X**	A2312X	AN12	AW12X	0,5	62	13	80
60	28	29,4	8,2	**H2313X**	A2313X	AN13	AW13X	0,58	65	14	85
65	32	33,4	8,5	**H2315X**	A2315X	AN15	AW15X	1,1	73	15	98
70	33	34,4	9,3	**H2316X**	A2316X	AN16	AW16X	1,33	78	17	105
75	35	36,4	10	**H2317X**	A2317X	AN17	AW17X	1,51	82	18	110
80	38	39,4	11	**H2318X**	A2318X	AN18	AW18X	1,77	86	18	120

Bearing housings

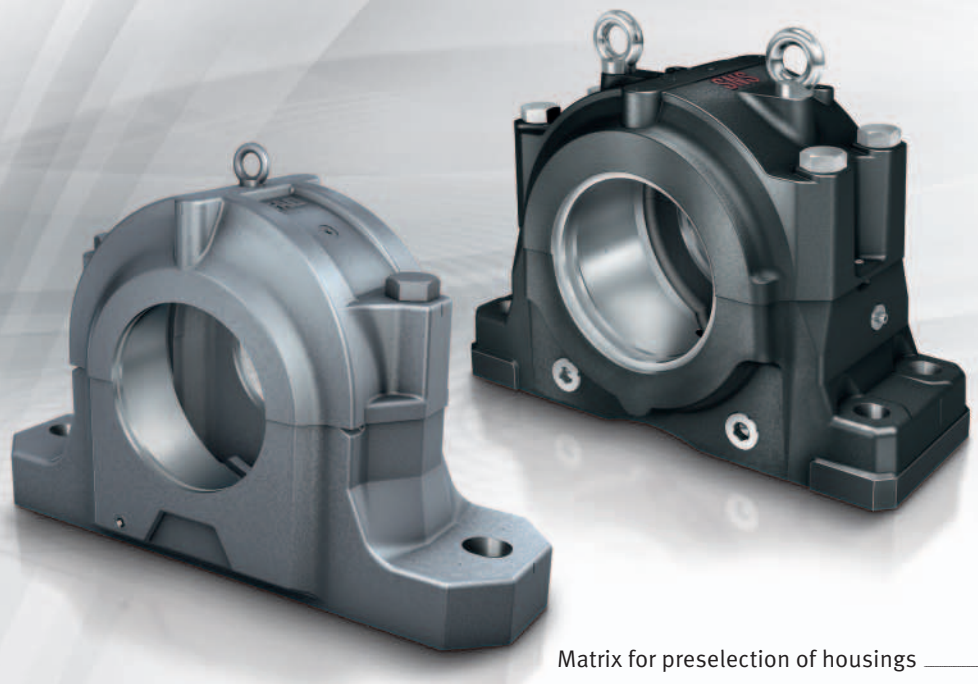

Matrix for preselection of housings 1556

1 Principles 1558

1.1 Housing concepts 1558
1.2 Locating and non-locating bearing concepts 1559
1.3 Materials 1561
1.4 Corrosion protection 1562
1.5 Selection wizard for bearing housings 1562

2 Split plummer block housings SNV 1563

2.1 Housing design 1563
2.2 Suitable bearings 1564
2.3 Materials, corrosion protection 1565

FAG

2.4 Locating and non-locating bearings 1565
2.5 Load carrying capacity 1566
2.6 Lubrication 1568
2.7 Sealing 1574
2.8 Dimensions, tolerances 1578
2.9 Housing configurations 1578
2.10 Structure of housing designation 1580
2.11 Mounting and dismounting 1584
2.12 Legal notice regarding data freshness 1585
2.13 Further information 1585

Product tables 1586
Split plummer block housings SNV, tapered bore, adapter sleeve 1586
Split plummer block housings SNV, cylindrical bore 1598

3 Split plummer block housings SNS 1612

3.1 Housing design 1612
3.2 Suitable bearings 1615
3.3 Materials, corrosion protection 1616
3.4 Locating and non-locating bearings 1617
3.5 Load carrying capacity 1617
3.6 Lubrication 1620
3.7 Sealing 1624
3.8 Dimensions, tolerances 1628
3.9 Housing configurations 1628
3.10 Structure of housing designation 1632
3.11 Mounting and dismounting 1635
3.12 Legal notice regarding data freshness 1637
3.13 Further information 1637

Product tables 1638
Split plummer block housings SNS, tapered bore, adapter sleeve 1638
Split plummer block housings SNS, cylindrical bore 1648

4 Other bearing housings 1656

4.1 Split plummer block housings S30 1656
4.2 Split plummer block housings SAF 1658
4.3 Split plummer block housings RLE 1661
4.4 Split plummer block housings KPG, KPGZ 1663
4.5 Split plummer block housings LOE 1665
4.6 Plummer block housing units VRE3 1667
4.7 Unsplit plummer block housings BND 1669
4.8 Take-up housings SPA 1672
4.9 Flanged housings F112 1674
4.10 Flanged housings F5 1675
4.11 Legal notice regarding data freshness 1677
4.12 Further information 1677



Matrix for preselection of housings

The matrix gives an overview of the design features of bearing housings and the bearing types suitable for the housings.

It can be used to make a preliminary assessment of whether a housing is fundamentally suitable for the envisaged application.

The additional information provided in the product chapter (see column "detailed information") must, however, be observed in addition to this overview in selection of the housing.

Standard housings		Split plummer block housings		
● suitable ■ available design – not suitable/not applicable		SNV 	SNS 	S30 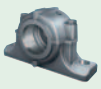
detailed information ➤		**1563**	**1612**	**1656**
Bearing type				
Self-aligning ball bearings		●	–	–
Spherical roller bearings		●	●	●
Barrel roller bearings		●	–	–
Cylindrical roller bearings		–	–	–
Deep groove ball bearings		●	–	–
Angular contact ball bearings		–	–	–
Spherical roller bearings, split		●	●	●
Mounting method				
On adapter sleeve		●	●	●
On withdrawal sleeve		–	–	–
On adjustment sleeve		–	–	–
On cylindrical seat		●	●	●
Lubrication				
Grease		●	●	●
Oil		●	●	–
Sealing				
Labyrinth seal, unsplit		■	■	–
Taconite seal, unsplit		■	■	–
Double lip seal, split		■	–	–
V ring seal, unsplit		■	–	–
Felt seal, split		■	–	■
Bolt-on seal, unsplit		–	■	–
Labyrinth seal, split		–	■	–
Taconite seal, split		–	■	–
High-pressure packing, split		–	–	–
Shaft diameter				
from	mm	20	115	110
	inch	$^{3}/_{4}$	$4^{7}/_{16}$	–
to	mm	160	530	150
	inch	$5^{1}/_{2}$	$19^{1}/_{2}$	–
Product tables	from page ➤	**1586**[1]	**1638**[1]	–[2]

[1] Housings for inch size shaft diameters GK 1

[2] GK 1

[3] TPI 229

						Unsplit plummer block housings		Take-up housings	Flanged housings	
	SAF	RLE	KPG	KPGZ	LOE	VRE3	BND	SPA	F112	F5
										
	1658	**1661**	**1663**	**1663**	**1665**	**1667**	**1669**	**1672**	**1674**	**1675**
	–	–	–	–	–	–	–	–	●	●
	●	●	●	●	●	–	●	●	–	●
	–	–	–	–	–	–	–	–	–	●
	–	–	–	–	–	●	–	–	–	–
	–	–	–	–	–	●	–	–	–	–
	–	–	–	–	–	●	–	–	–	–
	●	–	●	●	–	–	–	–	–	–
	●	–	–	–	●	–	●	●	–	●
	–	●	–	–	–	–	–	–	–	–
	–	–	●	–	–	–	–	–	–	–
	–	●	–	●	●	●	●	–	●	–
	●	●	●	●	–	●	●	●	●	●
	●	–	–	–	●	–	–	–	–	–
	■	■	–	–	■	–	■	■	–	–
	■	–	–	–	–	–	■	■	–	–
	–	–	–	–	–	–	–	–	–	–
	–	–	–	–	–	■	–	–	–	–
	–	–	–	–	–	■	–	–	■	■
	–	–	–	–	–	–	–	–	–	–
	■	–	–	–	–	–	–	–	–	–
	■	–	–	–	–	–	–	–	–	–
	–	–	■	■	–	–	–	–	–	–
	–	180	470	500	50	25	60	50	20	20
	$1^3/_8$	–	–	–	–	–	–	–	–	–
	–	500	1250	1320	240	120	420	400	60	100
	8	–	–	–	–	–	–	–	–	–
	–[3]	–[2]	–[2]	–[2]	–[2]	–[2]	–[2]	–[2]	–[2]	–[2]

1 Principles

1.1 Housing concepts

Standard housings

FAG standard housings are subdivided, in accordance with their fundamental design, into:

- split plummer block housings
- unsplit plummer block housings
- take-up housings
- flanged housings

Split plummer block housings

In the case of split plummer block housings, the housing body is split into an upper section and a lower section. This gives significantly simpler mounting and maintenance. The two halves of a housing form a matched pair and must not be interchanged with parts from other housings.

Unsplit plummer block housings

In the case of unsplit plummer block housings, the housing body is a single piece, so the bearing seat is free from parting lines. The housings are used where the bearings are subjected to very high loads.

The unsplit plummer block housings also include plummer block housing units VRE3. These are made available as completely assembled and greased bearing arrangement units comprising a housing, seals, bearings and shaft.

Take-up housings

Take-up housings SPA were developed specifically for tensioner drum bearing arrangements in belt conveyor plant. The housings are unsplit. There is a yoke-shaped drawbar eye for attachment to the tensioning device.

Flanged housings

Flanged housings have a flange perpendicular to the shaft axis and thus offer the ideal adjacent construction for numerous machines and pieces of equipment where the use of plummer block housings would be too demanding.

Special housings

Special requirements

Special housings are used in particularly challenging applications where not all the requirements can be fulfilled by the use of standard housings. These are not only specific industrial applications but also applications from the railway sector.

Customer-specific development

Special housings are developed in close cooperation and consultation with the customer. Schaeffler uses its comprehensive know-how of rolling bearing technology in order to ensure that every housing is optimally matched to the specific application.
Further information on special housings is given in the Catalogue GK 1 *https://www.schaeffler.de/std/1D54*.

1.2 Locating and non-locating bearing concepts

Different concepts depending on housing series

In order to achieve locating bearing arrangements as well as non-locating bearing arrangements, one of the following concepts is applied in each housing series:

- housings in locating bearing design and non-locating bearing design
- housings with locating rings

The unsplit plummer block housings VR3, where two bearing positions are integrated in one housing, constitute a special case here. Complete plummer block housing units VRE3 can be ordered that, depending on their design, contain a locating/non-locating bearing arrangement, an adjusted bearing arrangement or a floating bearing arrangement.

Housings in locating bearing design and non-locating bearing design

In this housing concept for the implementation of a locating or non-locating bearing arrangement, the housing must be ordered as necessary in a locating bearing design or a non-locating bearing design. This applies to the housings RLE, KPG, KPGZ, LOE, BND and SPA.

Variation of covers

In the case of the locating bearing design, the bearings are axially clamped between the covers on the housings ➤*1559*|*1*. In the case of the non-locating bearing design, the covers have shorter centring collars. As a result, the bearing can be axially displaced ➤*1559*|*2*.

The housing design is part of the designation

When ordering, the designation indicates whether the housing should be supplied in a locating or non-locating bearing design.

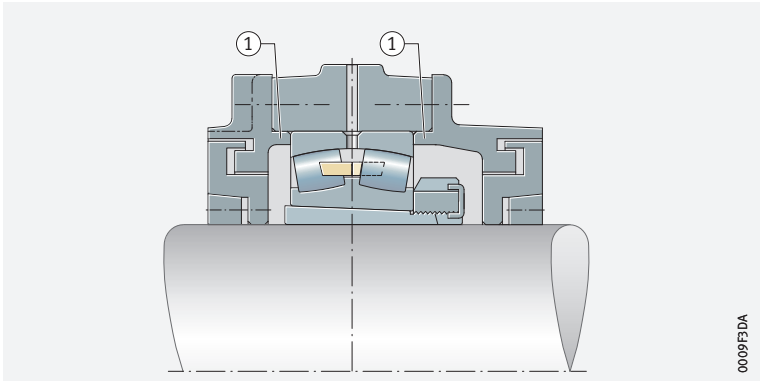

1 *Housing in locating bearing design*

① *Centring collars on covers for axial location of the bearing*

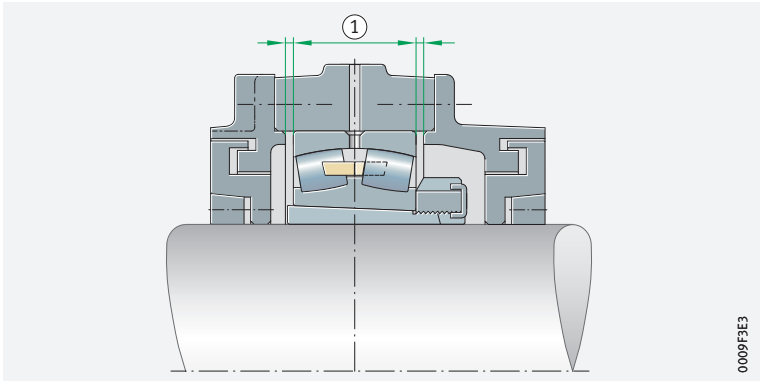

2 *Housing in non-locating bearing design*

① *Bearing can be axially displaced*

Housings with locating rings

In this housing concept for the implementation of a locating or non-locating bearing arrangement, locating rings are available as accessories that can be used to set the locating bearing function ➤*1560*|*3*. This applies to the housings SNV, SNS, S30, SAF and F5.

✎ *Variation of the number of locating rings*

In the case of these housings, the bearing seats are designed such that the bearing is capable of axial displacement and therefore acts as a non-locating bearing if locating rings are not inserted ➤*1560*|*4*. Once locating rings are inserted, the bearings are axially located. The locating rings are generally inserted in the housing on both sides of the bearing. Normally, an even number of locating rings is specified in order to achieve concentric seating of the bearing in the housing. In some cases, a single locating ring is sufficient.

✎ *Locating rings must be ordered separately*

The number of locating rings required is given in the product tables. Locating rings must be ordered separately.

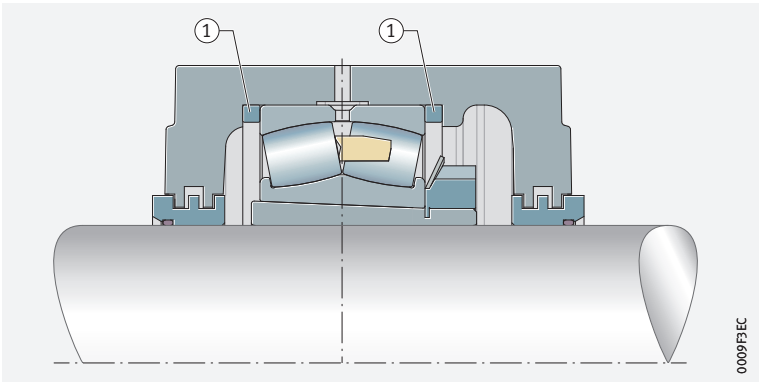

3
Locating bearing arrangement, as a result of inserted locating rings

① *Locating rings give axial location of the bearing*

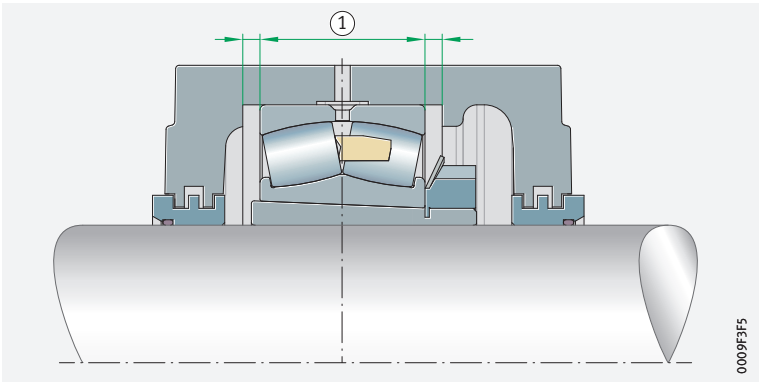

4
Non-locating bearing arrangement, no locating rings inserted

① *Bearing can be axially displaced*

1.3 Materials

Standard materials

Depending on the housing series, the standard material used for FAG standard housings is flake graphite cast iron, spheroidal graphite cast iron or cast steel. The material is generally indicated by a suffix in the housing designation. This indication is omitted in the case of some housings where these are only available in one material variant.

Suffixes:

- L for flake graphite cast iron
- D for spheroidal graphite cast iron
- S for cast steel

Other materials available by agreement

By agreement, housings made from other materials are also available. The material should be selected on the basis of a careful analysis of the application and the associated requirements.

Flake graphite cast iron

Restricted tensile strength and ductility, good compressive strength

For standard housings made from flake graphite cast iron, cast iron in accordance with DIN EN 1561 is generally used. In these cast materials with an iron/carbon/silicon base, the graphite inclusions are present in lamellar form. Under tensile load, these act as internal notches. The tensile strength of flake graphite cast iron is therefore limited and its ductility is comparatively low. The compressive strength of this alloy is, however, higher than the tensile strength by a factor of 4. These alloys also have good inherent stability.

Economical material for simple requirements

Flake graphite cast iron is therefore used in the case of housings with simple requirements. Furthermore, flake graphite cast iron represents the most economical variant of the cast materials available for use in housings.

In the case of split plummer block housings SAF, flake graphite cast iron to ASTM A48 Class35 is used.

Spheroidal graphite cast iron

Higher tensile strength and ductility than flake graphite cast iron

For standard housings made from spheroidal graphite cast iron, cast iron in accordance with DIN EN 1563 is generally used. Due to an addition of magnesium or, more rarely cerium or calcium, the graphite inclusions adopt a spheroidal form during casting. As a result, the tensile strength and ductility are higher than those of the grades with a lamellar graphite form.

Material for increased requirements

Spheroidal graphite cast iron is therefore used in the case of housings with an increased profile of requirements. The costs of spheroidal graphite cast iron are between those for flake graphite cast iron and cast steel.

In the case of split plummer block housings SAF, spheroidal graphite cast iron to ASTM A536 Grade 65-45-12 is used.



Cast steel

Moderate to high strength with high elongation at fracture

For standard housings made from cast steel, steel in accordance with DIN EN 10293 is generally used. Both unalloyed and alloyed steels are suitable for casting. The unalloyed cast steel used for housings combines moderate to high strength values with high elongation at fracture.

Material for high requirements

Cast steel is therefore used in the case of housings with high requirements for mechanical properties as well as a requirement for high ductility. The costs of cast steel are higher than the costs for flake graphite cast iron or spheroidal graphite cast iron. It is therefore recommended that checks be carried out to establish whether the material is really necessary in relation to the requirements of the specific application.

1.4 Corrosion protection

✎ *Universal paint coating*

All outer surfaces of standard housings not machined by chip-forming methods and the locating surfaces on the lower housing section have a universal paint coating. The coating can be finished using all synthetic resin, polyurethane, acrylic, epoxy resin, chlorinated rubber, nitrocellulose and acid-hardening hammer tone finishes.

✎ *Corrosion protection*

Inner and outer surfaces machined by chip-forming methods are provided with corrosion protection that can be easily removed. It is recommended that only volatile solvents and lint-free cloths should be used.

✎ *Special solutions available by agreement*

If there are particular requirements relating to paint coating and corrosion protection, special solutions are possible. If particular specifications are presented by the customer, we check their feasibility and these can be implemented if the result is positive.

1.5 Selection wizard for bearing housings

medias *professional*, the electronic product selection and advisory system from Schaeffler, includes a selection wizard for bearing housings *https://www.schaeffler.de/std/1D61*. This gives comprehensive assistance in the selection of housings and housing units. It takes account of the environmental conditions and the requirements placed on the bearing arrangement as well as the characteristics of the housings and the bearings suitable for the housings. Once the specified data have been inputted, the software generates detailed lists of results that also contain information on further accessories.

2 Split plummer block housings SNV

Split plummer block housings SNV:

- are designed in accordance with a modular concept and are highly versatile in application ➤*1563*|*2.1*
- are suitable for different bearing types and sizes with bore diameters from 20 mm to 160 mm ➤*1564*|*2.2*
- can be combined with an extensive range of seals covering a wide range of requirements and temperatures ➤*1563*|*1* and ➤*1574*|*2.7*

1
Seals for split plummer block housings SNV

T = *permissible long term temperature of seal*

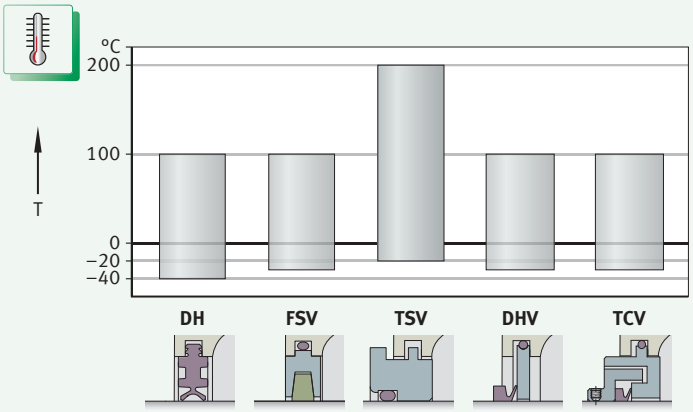

2.1 Housing design

Housings for wide range of applications

Split plummer block housings SNV and the associated bearings form bearing arrangement units that can be matched, through the appropriate selection of accessories, to a wide range of applications ➤*1564*|*2*. Applications include agricultural machinery, the paper processing industry, mining, materials processing, the steel industry and power stations.



2
Split plummer block housing SNV

Housings SNV052 to SNV200 are supplied without an eye bolt, housings SNV215 to SNV340 are supplied with an eye bolt.

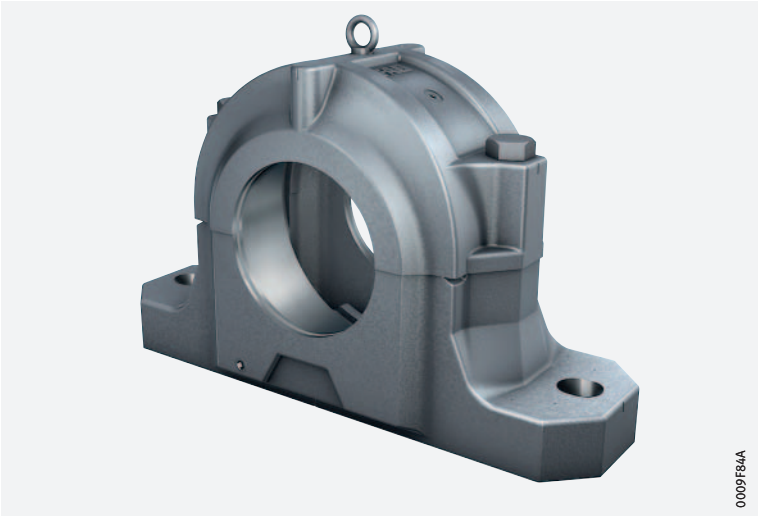

Modular concept

The decisive factor is the outside diameter of the bearing

Seals are matched to the shaft diameter

The housings are designed in accordance with a modular concept. Each housing can be fitted with rolling bearings of various diameter and width series if they have the correct outside diameter for the housing.

Depending on their design, the bearings can be located either directly on the shaft or by means of an adapter sleeve. This gives different shaft diameters for the same bearing size. The spacings between the shaft and housing body are compensated by means of appropriately matched seals.

2.2 Suitable bearings

Shaft diameters from 20 mm to 160 mm and from $^{3}/_{4}$ inch to $5^{1}/_{2}$ inch

Split plummer block housings SNV are intended for fitting with spherical roller bearings, self-aligning ball bearings and barrel roller bearings with a tapered or cylindrical bore as well as deep groove ball bearings ➤ *1564* | *1*. The range of shaft diameters is 20 mm to 160 mm and $^{3}/_{4}$ inch to $5^{1}/_{2}$ inch.

1
Bearing types and sizes

Bearing type	Size
Spherical roller bearings	
■ with tapered bore and adapter sleeve	21307..-K to 21322..-K
	22205..-K to 22232..-K
	22308..-K to 22332..-K
	23218..-K to 23232..-K
■ with cylindrical bore	21304 to 21322
	22205 to 22232
	22308 to 22332
	23218 to 23232

continued ▼

1 *Bearing types and sizes*

Bearing type	Size
Self-aligning ball bearings ■ with tapered bore and adapter sleeve	1205-K to 1222-K
	1305-K to 1320-K
	2205-K to 2220-K
	2305-K to 2320-K
■ with cylindrical bore	1205 to 1222
	1305 to 1320
	2205 to 2220
	2304 to 2320
Barrel roller bearings ■ with tapered bore and adapter sleeve	20205-K to 20232-K
	20305-K to 20332-K
■ with cylindrical bore	20205 to 20232
	20305 to 20330
Deep groove ball bearings ■ with cylindrical bore	6205 to 6232
	6304 to 6332

continued ▲

Split spherical roller bearings

Unsplit spherical roller bearings with an adapter sleeve can be replaced by split spherical roller bearings. This gives a considerable reduction in the work associated with bearing replacement in numerous applications. In order to ensure selection of the correct combination of housing and bearing when using split bearings, please contact Schaeffler.

The range of split spherical roller bearings is described in detail in a separate publication TPI 250.

2.3 Materials, corrosion protection

Materials

The standard material for the housing bodies is flake graphite cast iron EN-GJL-HB215 in accordance with DIN EN 1561 (suffix L). By agreement, housing bodies made from spheroidal graphite cast iron EN-GJS-400-15 in accordance with DIN EN 1563 (suffix D) are available.

Corrosion protection

All outer surfaces not machined by chip-forming methods have a universal paint coating (colour RAL 7031, blue grey). The coating can be finished using all synthetic resin, polyurethane, acrylic, epoxy resin, chlorinated rubber, nitrocellulose and acid-hardening hammer tone finishes.

Inner and outer surfaces machined by chip-forming methods are provided with anti-corrosion protection that can be easily removed.
It is recommended that only volatile solvents and lint-free cloths should be used.



2.4 Locating and non-locating bearings

Locating bearing arrangement by means of locating rings

The bearing seats in the housing are machined such that the bearings are movable in the housing and can thus function as non-locating bearings. Locating bearing arrangements can be achieved by the insertion of one locating ring FRM on each side of the bearing outer ring. The bearing is thus seated in the centre of the housing. Locating rings must be ordered separately.

2.5 Load carrying capacity

Guide values

Guide values are given for the rupture load of plummer block housings SNV and the maximum load carrying capacity of connecting screws for the upper and lower housing sections ➤ 1566 | 3 and ➤ 1567 | 2. The guide values are valid for purely static loading.

The guide values for housing rupture load are valid for the standard housing material flake graphite cast iron (suffix L). For spheroidal graphite cast iron (suffix D) a factor of 1,6 should be applied.

The guide values only apply if the flatness of the mounting surface in accordance with DIN EN ISO 1101 corresponds to the tolerance grade IT8 in accordance with DIN EN ISO 286-1 (measured across the diagonal). A precondition for supporting loads is that the housing base surface is completely and rigidly supported.

Safety factors

When determining the permissible static load, safety factors must be applied:

- safety factor of 6 relative to the housing rupture load
- safety factor of 3 relative to the maximum load carrying capacity of the connecting screws

The housing must not be subjected to an axial load of more than $^{2}/_{3}$ of the housing rupture load $F_{180°}$.

If the housing is subjected to axial load, the permissible axial load of the bearing fitted must be taken into consideration. If the bearing is located on the shaft using an adapter sleeve, the axial retaining force of the bearing and adapter sleeve must also be taken into consideration.

If the load direction is between 55° and 120° or axial load is present, we recommend that the housings should be secured in the load direction by means of stops or dowels.

3
Load directions F for the guide values for the housing rupture load and the maximum load carrying capacity of the connecting screws

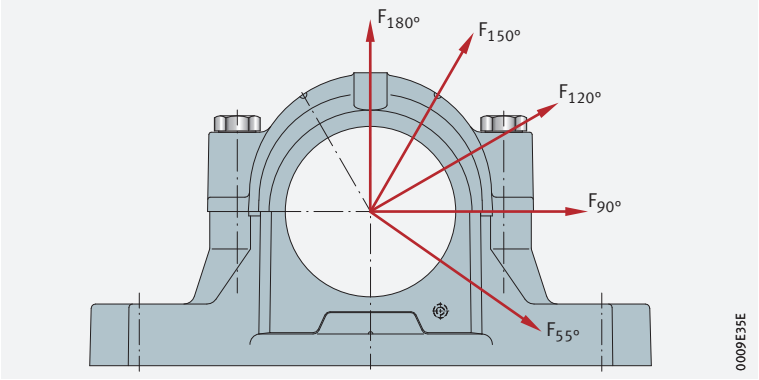

2 *Guide values for housing rupture load and maximum load carrying capacity of connecting screws. Tightening torques*

Housing	Housing rupture load in load direction F Housing made from flake graphite cast iron					Connecting screws				
						Thread to DIN 13	Tightening torque[1]	Maximum load carrying capacity in load direction F[2]		
	55°	90°	120°	150°	180°	Grade 8.8		120°	150°	180°
	kN	kN	kN	kN	kN		Nm	kN	kN	kN
SNV052-F-L	160	95	70	60	80	M10	51	60	35	30
SNV062-F-L	170	100	80	65	85	M10	51	60	35	30
SNV072-F-L	190	110	85	80	95	M10	51	60	35	30
SNV080-F-L	210	130	95	85	105	M10	51	60	35	30
SNV085-F-L	225	140	100	90	120	M10	51	60	35	30
SNV090-F-L	265	160	120	105	130	M10	51	60	35	30
SNV100-F-L	280	170	125	120	140	M12	87	80	45	40
SNV110-F-L	300	180	130	125	150	M12	87	80	45	40
SNV120-F-L	335	200	150	130	170	M12	87	80	45	40
SNV125-F-L	335	200	150	130	170	M12	87	80	45	40
SNV130-F-L	400	250	180	150	200	M12	87	80	45	40
SNV140-F-L	425	265	190	170	210	M12	87	80	45	40
SNV150-F-L	475	280	200	180	235	M12	87	80	45	40
SNV160-F-L	530	335	250	210	265	M16	215	180	100	90
SNV170-F-L	560	355	265	225	280	M16	215	180	100	90
SNV180-F-L	630	375	280	250	300	M20	430	260	150	130
SNV190-F-L	630	375	280	250	300	M20	430	260	150	130
SNV200-F-L	670	400	315	280	335	M20	430	260	150	130
SNV215-F-L	800	450	355	315	400	M20	430	260	150	130
SNV230-F-L	900	530	400	355	450	M24	740	360	210	180
SNV240-F-L	1 000	600	450	400	500	M24	740	360	210	180
SNV250-F-L	1 060	630	475	425	530	M24	740	360	210	180
SNV260-F-L	1 180	710	530	475	600	M24	740	360	210	180
SNV270-F-L	1 180	710	530	475	600	M24	740	360	210	180
SNV280-F-L	1 320	750	600	530	630	M24	740	360	210	180
SNV290-F-L	1 400	850	630	560	710	M24	740	360	210	180
SNV300-F-L	1 500	900	670	600	750	M24	740	360	210	180
SNV320-F-L	1 700	1 000	750	670	850	M24	740	360	210	180
SNV340-F-L	1 900	1 120	850	750	950	M30	1 450	640	370	320

Housings made from spheroidal graphite cast iron (suffix D) have a housing rupture load that is 1,6 times higher than that of housings made from flake graphite cast iron.

[1] *The tightening torques are maximum values when utilising 90% of the yield stress of the screw material and with a friction factor of 0,14. We recommend that the screws should be inserted to 70% of these values.*

[2] *Maximum load carrying capacity in load direction F, where there is still contact at the parting line between the upper and lower housing sections.*



2.6 Lubrication

Grease lubrication

Split plummer block housings SNV are principally intended for grease lubrication. The housings can, however, also be supplied in a design for oil lubrication.

Lubricating greases

Suitable greases

Arcanol MULTITOP, a lithium soap grease of NLGI class 2 with particularly effective EP additives, is highly suitable under the following conditions:

- bearing operating temperatures < +100 °C
- bearing loads P/C < 0,3
- bearing-specific speed parameter $k_f \cdot n \cdot d_M < 700\,000\ min^{-1} \cdot mm$ where: $k_f = 1$ for self-aligning ball bearings and deep groove ball bearings, $k_f = 8$ to 10,5 for spherical roller bearings

Due to their favourable flow behaviour, greases of NLGI grade 2, such as Arcanol MULTITOP and Arcanol MULTI2, are more suitable for relubrication than greases of higher consistency grades.

Grease quantities

Basic rule for initial greasing

For initial greasing, the basic rule is that the bearing should be filled with grease to 100% and the free volume of the housing to 60%. This is the basis for the recommended grease quantities ➤ *1568* | ▦ *3*. The free volume is the space that remains in the housing once the bearing, adapter sleeve, shaft and seals have been fitted.

Relubrication

For relubrication, minimum quantities of grease are recommended ➤ *1568* | ▦ *3*.

▦ **3**
Recommended grease quantities for initial greasing and relubrication

Housing	Grease quantity	
	Initial greasing ≈ g	Relubrication (minimum quantity) ≈ g
SNV052-F	30	5
SNV062-F	45	5
SNV072-F	65	10
SNV080-F	80	10
SNV085-F	105	10
SNV090-F	130	10
SNV100-F	180	15
SNV110-F	210	15
SNV120-F	270	20
SNV125-F	290	20
SNV130-F	330	20
SNV140-F	440	25
SNV150-F	500	30
SNV160-F	650	40
SNV170-F	700	45
SNV180-F	900	55
SNV190-F	950	60
SNV200-F	1 200	70
SNV215-F	1 400	80
SNV230-F	1 600	85
SNV240-F	1 700	90
SNV250-F	2 000	100
SNV260-F	2 000	120
SNV270-F	2 500	130

continued ▼

3 *Recommended grease quantities for initial greasing and relubrication*

Housing	Grease quantity	
	Initial greasing ≈ g	Relubrication (minimum quantity) ≈ g
SNV280-F	2 600	140
SNV290-F	3 000	150
SNV300-F	3 100	160
SNV320-F	3 700	200
SNV340-F	4 500	240

continued ▲

Special case with 100% grease filling

With a speed parameter $n \cdot d_M < 50\,000\ min^{-1} \cdot mm$ and a non-contact seal (labyrinth seal TSV), where the grease should also perform a sealing function, the housing and seal cavities should be filled to 100%.

Relubrication

Bearings with circumferential lubrication groove

Where relubrication is carried out on bearings with a circumferential lubrication groove, the grease is introduced into the housing via the central lubrication hole ➤ *1570* | 4. In this type of relubrication, the grease acts directly on the bearing raceway.

Bearings without lubrication groove

Where relubrication is carried out on bearings without a lubrication groove, the grease must be introduced into the housing via the lateral lubrication hole. In this case, the housing cavities on the side with the lubrication nipple must be filled completely with grease so that the relubrication grease can act immediately on the bearing.

Permanent use of lubrication nipples

In both cases, the lubrication hole present (threaded hole M10×1) is prepared by removing the screw plug and permanently inserting one of the lubrication nipples supplied at this point.

Marked positions for further lubrication holes

As an alternative to the lubrication holes already present, lubrication holes may be introduced at other positions as indicated by the cast-in marking points.

Lubrication holes can be introduced at further marked positions for the relubrication of labyrinth seals.

Prevention of overgreasing

For relubrication, minimum quantities of grease are recommended ➤ *1568* | 3. In order to prevent overgreasing, the screw plug in the grease outlet hole in the lower housing section must be removed while relubrication is being carried out. This allows superfluous grease to escape. This must be observed in particular when using double lip seals DH. Otherwise, there is a risk that the double lip seal will be pressed out of the housing.

The grease outlet hole must then be closed off again using the screw plug. If unfavourable environmental conditions are present, there is therefore a risk of contaminant ingress into the housing when the grease outlet holes are opened.



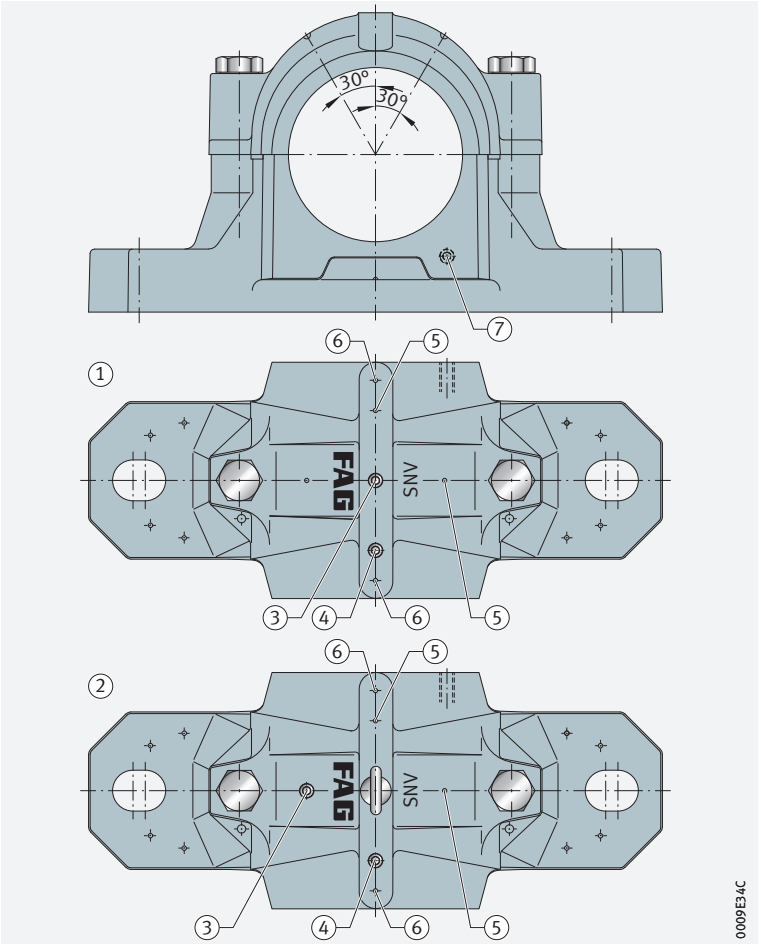

4 *Positions for relubrication*

① *SNV052-F to SNV200-F*
② *SNV215-F to SNV340-F*
③ *Central lubrication hole, for bearings with lubrication groove*
④ *Lateral lubrication hole, for bearings without lubrication groove*
⑤ *Marked positions for further lubrication holes for lubrication of the bearing*
⑥ *Marked positions for lubrication holes for lubrication of seals*
⑦ *Grease outlet hole*

Standard parts and dimensions

Screw plugs

The lubrication and grease outlet holes are closed off using screw plugs to DIN 906.

Lubrication nipples

Lubrication nipples with a dust cap are supplied as followed:

- button head lubrication nipples to DIN 3404-M10×1
- taper type lubrication nipple to DIN 71412-AM10×1

Dimensions

The size of the grease outlet hole is dependent on the size of the housing ➤ *1570* | 4.

4 *Dimensions of threaded holes*

Housing	Thread for	
	Grease outlet hole	Relubrication hole
SNV052-F – SNV090-F	M10×1	M10×1
SNV100-F – SNV125-F	M14×1,5	
SNV130-F – SNV340-F	M20×1,5	

Oil lubrication

✎ *Suitability for oil bath and recirculating oil lubrication*

Split plummer block housings SNV are suitable not only for grease lubrication but also for oil bath lubrication and recirculating oil lubrication. The housings have a large internal cavity with oil collector pockets in the lower section. Due to the housing geometry, it is possible to introduce connection holes for oil inlet, oil outlet, an oil sight glass and a temperature sensor.

Connection holes for oil lubrication

✎ *Dimensions*

The recommended dimensions are valid for oil bath lubrication and for recirculating oil lubrication ➤*1571*|▦ *5*, ➤*1572*|▦ *6* and ➤*1572*|⧉ *5*.

✎ *Utilisation*

If recirculating oil lubrication is used, the hole M_2 is intended for the oil inlet function. If oil bath lubrication is used, a venting device can be installed for venting of the housing.

If oil bath lubrication is used, the hole M_4 is intended for the oil sight glass. If recirculating oil lubrication is used, the hole can be used for the oil outlet.

▦ **5**
Recommended dimensions of connnection holes for oil inlet and oil outlet

Housing	Connection for				
	Oil inlet		Oil outlet		
	M_2	$n_3/2$ mm	M_3	α °	g_6 mm
SNV100-F	G 1/4	31	M10×1	50	44
SNV110-F	G 1/4	33,5	M10×1	50	46
SNV120-F	G 1/4	35,5	M10×1	50	49
SNV125-F	G 1/4	28,5	M10×1	50	49
SNV130-F	G 1/4	38	M10×1	50	51,5
SNV140-F	G 1/4	40,5	M10×1	60	57,5
SNV150-F	G 1/4	42,5	M10×1	60	60
SNV160-F	G 1/4	45	M10×1	60	62,5
SNV170-F	G 1/4	46,5	M10×1	60	64
SNV180-F	G 1/4	19,5	M10×1	60	69
SNV190-F	G 1/4	49,5	M10×1	60	68,5
SNV200-F	G 1/4	55,5	M10×1	60	77,5
SNV215-F	G 1/4	58,5	M10×1	60	80
SNV230-F	G 1/4	61	M10×1	60	83
SNV240-F	G 1/4	60	M10×1	60	81,5
SNV250-F	G 1/4	65,5	M10×1	60	89
SNV260-F	G 1/4	62,5	M10×1	60	84
SNV270-F	G 1/4	71,5	M10×1	60	86,5
SNV280-F	G 1/4	68	M10×1	60	92,5
SNV290-F	G 1/4	76	M10×1	60	102,5
SNV300-F	G 1/4	73	M10×1	60	99,5
SNV320-F	G 1/4	77	M10×1	60	105,5
SNV340-F	G 1/4	81	M10×1	60	109,5



6 *Recommended dimensions of connection holes for oil sight glass*

Housing	Connection for oil sight glass			
	M_4	g_7 mm	h_3	D_5
SNV100-F	$G^3/_8$	33	31	24
SNV110-F	$G^3/_8$	35	28	24
SNV120-F	$G^3/_8$	38	35	24
SNV125-F	$G^3/_8$	44	24	24
SNV130-F	$G^1/_2$	43	28,5	30
SNV140-F	$G^1/_2$	45	40	30
SNV150-F	$G^1/_2$	47	38	30
SNV160-F	$G^1/_2$	50	39	30
SNV170-F	$G^3/_4$	55	46	36
SNV180-F	$G^3/_4$	57	43	36
SNV190-F	$G^3/_4$	48	45	36
SNV200-F	$G^3/_4$	62	50	36
SNV215-F	$G^3/_4$	67	58	36
SNV230-F	$G^3/_4$	70	60	36
SNV240-F	$G^3/_4$	61	60	36
SNV250-F	$G^3/_4$	75	55	36
SNV260-F	$G^3/_4$	65	65	36
SNV270-F	$G^3/_4$	81	55	36
SNV280-F	$G^3/_4$	70	60	36
SNV290-F	$G^3/_4$	87	58	36
SNV300-F	$G^3/_4$	75	70	36
SNV320-F	$G^3/_4$	80	73	36
SNV340-F	$G^3/_4$	95	75	36

5 *Dimensions of connection holes*

① *Venting device*
② *Screw plug*
③ *Oil sight glass*

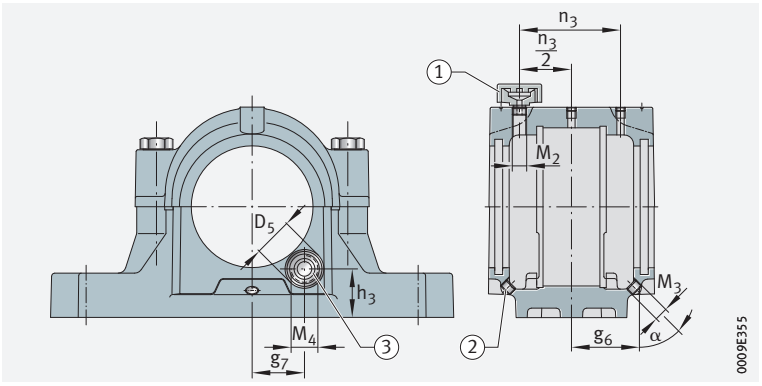

Design for oil lubrication

✎ *Housings with connection holes for oil lubrication*

Plummer block housings SNV can be supplied by agreement in a design for oil lubrication. Housings of this design already have the connection holes for oil inlet, oil outlet and an oil sight glass to the recommended dimensions ➤*1571*|▦*5*, ➤*1572*|▦*6* and ➤*1572*|⧉*5*.

The scope of delivery of the design for oil lubrication includes:

- 1 oil sight glass OSGL
- 1 venting device VENT
- 2 screw plugs VSB

Housings with connection holes according to individual customer specifications can also be supplied once their feasibility has been checked.

Sealing

✎ *Sealing of the shaft*

When using the double lip seal DH, a certain amount of oil leakage must be expected, which is unavoidable with seals that are split and not spring-loaded.

In order to limit oil leakage to a small quantity, the shaft in the seal area should have the following characteristics:

- hardness at least 55 HRC
- ground without spiral marks to Ra = 0,2 µm, but at least Ra ≦ 0,5 µm

A technically oiltight design is only possible with a spring-loaded, unsplit rotary shaft seal.

✎ *Sealing of the housing body*

The parting line between the upper and lower housing sections must be sealed with a thin layer of a commercial sealant (with permanent elasticity). In the case of a housing closed on one side, the base of the groove in which the cover is inserted must be brushed with sealant.

Guidelines for oil bath lubrication

✎ *Minimum oil level*

When using oil bath lubrication, a minimum oil level must be ensured. This corresponds to the dimension h3 ➤*1572*|▦*6* and ➤*1572*|⧉*5*.

✎ *Housing venting*

When using oil bath lubrication, venting of the housing is absolutely necessary.

For operation with oil bath lubrication, venting of the housing must be provided. For example, the filling hole can be closed off using a bleed screw.



2.7 Sealing

Seals

Standard seals

For the sealing of the bearing housings, the standard seals available are the double lip seal, the felt seal, the labyrinth seal, the V ring seal and the taconite seal. These seals are matched to the rectangular section annular slots on both sides of the housings. They are principally suitable for grease lubrication. The seals must be ordered separately. In the case of the double lip seal and felt seal, the scope of delivery comprises two seals, while all other seals are supplied individually. If a continuous shaft is present, two seals must be ordered.

Special seals

Special seals are also available by agreement.

Double lip seal DH

Separate sealing functions inwards and outwards

The seal lips of the double lip seal DH slide on the rotating shaft. The outer seal lip prevents ingress of contamination into the bearing. This effect is supported by the grease inserted between the seal lips. The inner seal lip prevents lubricant from escaping from the housing. The seal is made from acrylonitrile butadiene rubber NBR and is suitable for circumferential velocities of up to 13 m/s. For continuous operation, a maximum circumferential velocity of 6 m/s is recommended.

The seal is suitable for temperatures from –40 °C to +100 °C. It allows shaft misalignment of up to 0,5° in both directions.

Two-piece seal for simplified fitting

The double lip seal DH is a two-piece seal. It can be easily inserted in the annular slots in the housing. The parting joint of the seal halves should be in the same plane as the parting joint of the housing.

Shaft

The contact running area on the shaft for the seal lips should have a roughness Ra 3,2.

Felt seals FSV

Robust seal for grease lubrication

Felt seals FSV are particularly suitable for grease lubrication. They comprise an adapter holding the inserted, oil-impregnated felt strip and the adapter is secured against rotation by an O ring in the annular slot in the housing. The seals are suitable for circumferential velocities of up to 5 m/s and, after running-in, of up to 15 m/s. They can be used at temperatures up to +100 °C. The permissible shaft misalignment is 0,5° in both directions.

Aramide packing

By agreement, aramide packing is available for temperatures of more than 100 °C.

Labyrinth seals TSV

Non-contact seal for high circumferential velocities

Labyrinth seals TSV give non-contact sealing. They are therefore suitable for high circumferential velocities. The O ring, which is pressed between the labyrinth ring and shaft, is made from fluoro rubber FKM and is suitable for temperatures of up to +200 °C. The labyrinth seal allows shaft misalignment of up to 0,5° in both directions.

Relubrication

If necessary, the labyrinth can be relubricated. For this purpose, a lubrication hole must be made in the upper housing section for each labyrinth seal. The optimum positions are indicated by cast-in pilot holes.

V ring seals DHV

✎ *Seal in axial contact*

In the case of V ring seals DHV, the seal lip is in axial contact with the sliding surface which is located in the rectangular section annular slot of the housing. The seal is made from NBR and is suitable, when using grease lubrication, for circumferential velocities of up to 12 m/s. If circumferential velocities of more than 8 m/s are present, axial location is necessary. The seal allows shaft misalignment of up to 0,5° in both directions.

Taconite seals TCV

✎ *Seal for extreme contamination impact*

Taconite seals TCV are combined seals comprising a labyrinth seal and a V ring. These seals are suitable for extreme operating conditions in relation to contamination and dust. The V ring is made from NBR and is suitable for temperatures of up to +100 °C. The taconite seal allows shaft misalignment of up to 0,5° in both directions.

Covers

Covers are used in the case of housings closed on one side. The covers fit in the rectangular section annular slots in the housings.

Covers DKV

✎ *Covers made from plastic*

Covers DKV are made from plastic and are suitable for long term temperatures of up to +120 °C. The covers must be ordered separately.

Covers DKVT

✎ *Covers made from metal*

Covers DKVT are made from steel, flake graphite cast iron or spheroidal graphite cast iron and are suitable for temperatures of up to +200 °C. Covers are available by agreement.

Characteristics and operating limits

The characteristics and operating limits of the standard seals and covers are compared in an overview ➤ *1576* | ▦ *7*.



7
Standard seals and covers for plummer block housings SNV

++ = *highly suitable*
\+ = *suitable*
(+) = *suitable with restrictions*
– = *not suitable*

Seals and covers		**Double lip seal, split**	**Felt seal, split**
		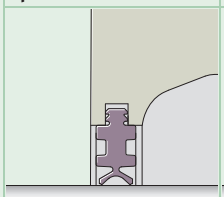	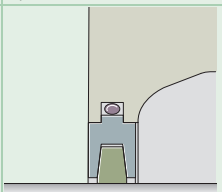
Designation		**DH**	**FSV**
Material		NBR	Steel, felt, NBR
Pieces per pack		2	2
Suitability for sealing against			
dust		++	+
fine, solid particles		++	–
coarse, solid particles		+	–
slivers		+	+
spray liquids		+	–
Operating limits			
Long term temperature	°C	–40 to +100 (due to NBR)	–30 to +100 (due to NBR)
	°F	–40 to +210 (due to NBR)	–22 to +210 (due to NBR)
Circumferential velocity	m/s	≦13 (continuous 6)	5 (after running-in 15)
Misalignment	°	≦0,5	≦0,5
Low friction		++	–
Axial shaft displacement (suitability as non-locating bearing)		++	++
Vertical arrangement		+	–
Suitability for grease relubrication		++	–
Suitability for oil lubrication		(+)	–
Compatibility with sunlight		+	++
Preconditions			
Tolerance class[1] of shaft diameter		h8 (h9)	h8 (h9)
Shaft roughness	µm	Ra 3,2	Ra 3,2

[1] *The envelope requirement Ⓔ applies*

Labyrinth seal, unsplit	V ring seal, unsplit	Taconite seal, unsplit	Covers	
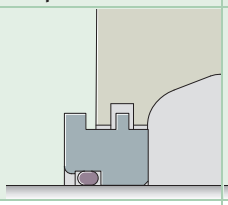	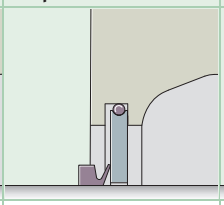	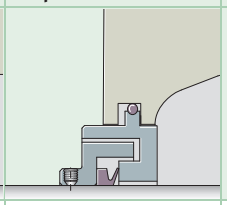	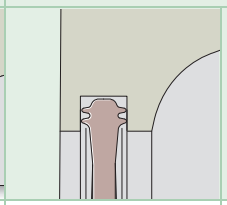	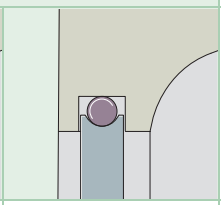
TSV	**DHV**	**TCV**	**DKV**	**DKVT**
Steel, FKM	Steel, NBR	Steel, NBR	Plastic	Steel or cast iron, FKM
1	1	1	1	1
+	+	++	+	+
+	+	++	+	+
+	–	++	+	+
++	–	++	+	+
–	+	++	+	+
–20 to +200 (due to FKM)	–30 to +100 (due to NBR)	–30 to +100 (due to NBR)	–40 to +120	–20 to +200 (due to FKM)
–4 to +390 (due to FKM)	–22 to +210 (due to NBR)	–22 to +210 (due to NBR)	–40 to +250	–4 to +390 (due to FKM)
No restriction	≦12	≦12	Not applicable	Not applicable
≦0,5	≦0,5	≦0,5	Not applicable	Not applicable
++	++	+	Not applicable	Not applicable
+	(+)	+	Not applicable	Not applicable
–	(+)	–	+	+
+	(+)	+	+	++
–	–	–	–	++
++	–	++	(+)	++
h8 (h9)	h8 (h9)	h8 (h9)	Not applicable	Not applicable
Ra 3,2	Ra 3,2	Ra 3,2	Not applicable	Not applicable



2.8 Dimensions, tolerances

Dimensions

The dimensions of housings SNV correspond to ISO 113 and DIN 736 to DIN 739.

Interchangeability

The housings SNV are interchangeable with the existing housings SN and SNE.

Tolerances for the bearing seat

The bearing seat in split plummer block housings SNV is machined to the tolerance class G7 in accordance with DIN EN ISO 286-1. The tolerance indicated is valid in the delivered condition, i.e. before the screws connecting the upper and lower sections are loosened.

By agreement, the housings can also be supplied with other tolerance classes for the bearing seat.

2.9 Housing configurations

Possible combinations

Modular construction allows numerous combinations

On the basis of the standard components, the following features can be varied in the housing configuration ➤1579|6 and ➤1579|7:

- location of bearings with a tapered bore by means of an adapter sleeve on a shaft of constant diameter or of bearings with a cylindrical bore directly on a stepped shaft
- sealing of housing by double lip seal, felt seal, labyrinth seal, V ring seal or taconite seal
- continuous shaft or a housing closed on one side
- cover made from plastic (DKV) or cover made from steel or cast iron (DKVT)
- design of the bearing arrangement as a locating bearing arrangement or a non-locating bearing arrangement
- spherical roller bearing of split or unsplit design

6

Plummer block housing SNV for bearings with tapered bore and adapter sleeve (overview of combinations)

① *Locating bearing*
② *Non-locating bearing*
③ *Labyrinth seal TSV*
④ *Cover DKV*
⑤ *Cover DKVT*
⑥ *Taconite seal TCV*
⑦ *Double lip seal DH*
⑧ *V ring seal DHV*
⑨ *Felt seal FSV*

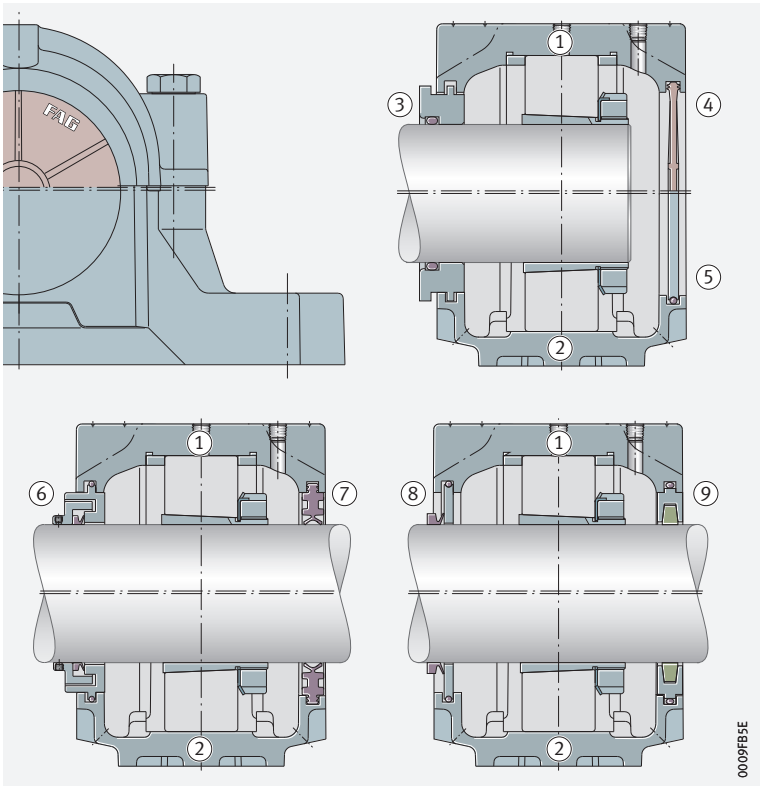

7

Plummer block housing SNV for bearings with cylindrical bore (overview of combinations)

① *Locating bearing*
② *Non-locating bearing*
③ *Labyrinth seal TSV*
④ *Cover DKV*
⑤ *Cover DKVT*
⑥ *Taconite seal TCV*
⑦ *Double lip seal DH*
⑧ *V ring seal DHV*
⑨ *Felt seal FSV*

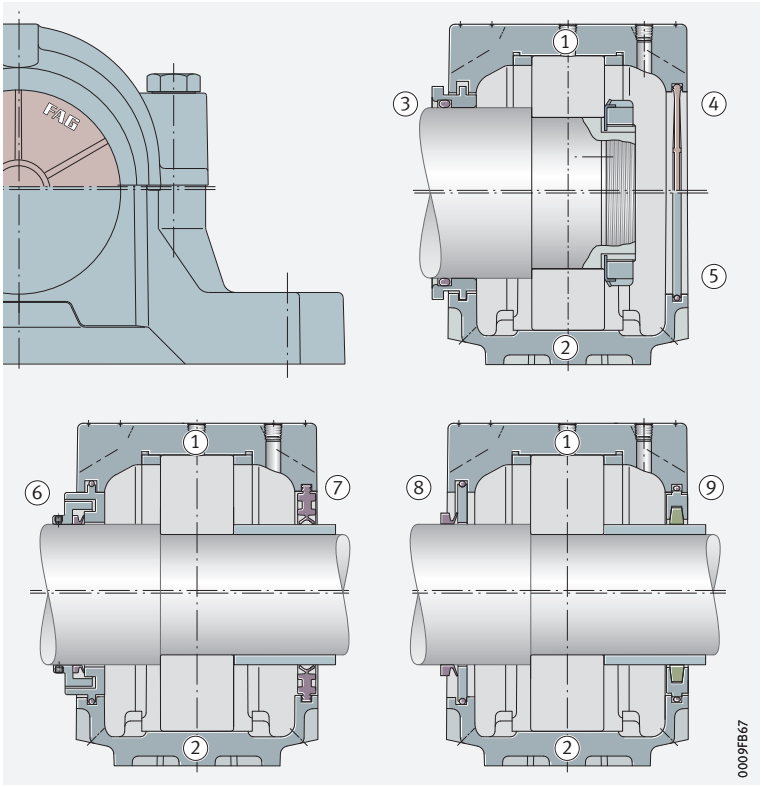

Mounting of split spherical roller bearings

Simplified bearing replacement by means of split bearing

In the case of plummer block housings SNV, an unsplit spherical roller bearing with a tapered bore and adapter sleeve can be replaced by a split spherical roller bearing ➤*1580*|*8*.

8
Plummer block housing SNV with split and unsplit spherical roller bearing

① *Locating bearing with unsplit bearing*
② *Non-locating bearing with unsplit bearing*
③ *Locating bearing with split bearing*
④ *Non-locating bearing with split bearing*

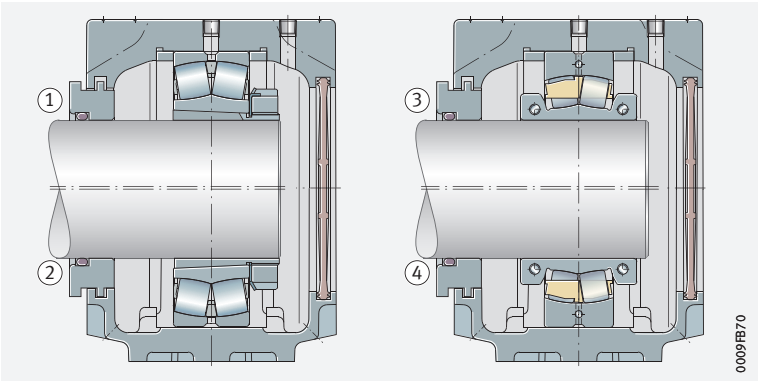

In order to ensure selection of the correct combination of housing and bearing when using split bearings, please contact Schaeffler.

The range of split spherical roller bearings is described in detail in a separate publication TPI 250.

2.10 Structure of housing designation

The designation of the housings and associated seals, covers and locating rings follows a set model. Description of the designation components ➤*1580*|*8* to ➤*1582*|*11*. Structure of designations ➤*1580*|*9* to ➤*1582*|*12*.

8
Components of the designations of plummer block housings SNV

Characteristic		Code	Description
①	Series	SNV	Split plummer block housings SNV
②	Bearing outside diameter	340	Outside diameter 340 mm
③	Housing design	F	Threaded holes for grease relubrication and grease outlet
④	Housing material	L	Flake graphite cast iron (standard)
		D	Spheroidal graphite cast iron

9
Designation structure of plummer block housings SNV, example



9 *Components of the designations of standard seals*

Characteristic		Code	Description
①	Series	DH	Double lip seal, split
		FSV	Felt seal, split
		TSV	Labyrinth seal, unsplit
		DHV	V ring seal, unsplit
		TCV	Taconite seal, unsplit
②	Diameter series of bearing, bearing bore	2	Bearings of diameter series 2, cylindrical bearing bore
		3	Bearings of diameter series 3, cylindrical bearing bore
		5	Bearings of diameter series 2, tapered bearing bore and adapter sleeve
		6	Bearings of diameter series 3, tapered bearing bore and adapter sleeve
③	Bore code of bearing	08	Bore diameter (8 · 5) mm = 40 mm
④	Shaft diameter	No further indications	Standard shaft diameter of dimension series
		X105	Inch size shaft diameter: ■ 1 inch + 5 · $^{1}/_{16}$ inch = $1^{5}/_{16}$ inch

10 *Designation structure of standard seals, examples*

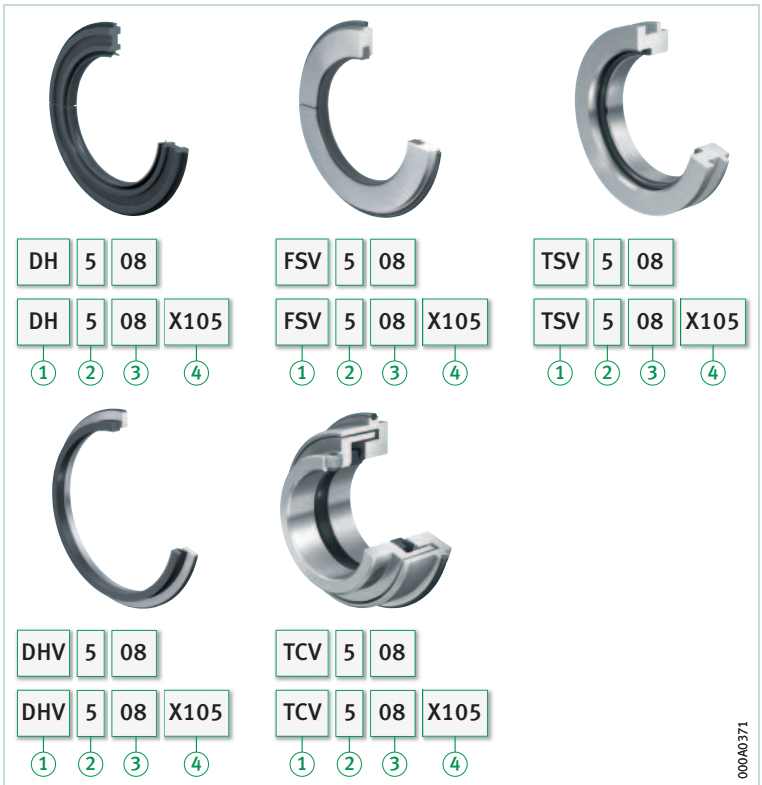

10 *Components of designations of covers*

Characteristic		Code	Description
①	Series	DKV	Cover made from plastic
		DKVT	Cover made from steel and FKM
②	Housing size	080	Cover suitable for housing SNV080

11 *Designation structure of covers, examples*



11 *Components of designations of locating rings*

Characteristic		Code	Description
①	Series	FRM	Locating ring
②	Outside diameter	80	Outside diameter 80 mm
③	Width	10,5	Width 10,5 mm

12 *Designation structure of locating rings, example*

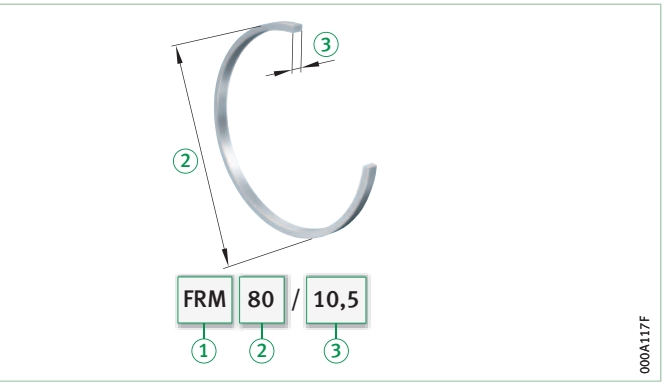

Ordering examples

✎ *Separate ordering of housing body and accessories*

When a split plummer block housing SNV is ordered, the housing designation only describes the housing body. The other components such as seals, covers or locating rings must be ordered separately in the specific design required. The rolling bearing and, if necessary, the adapter sleeve must also be ordered separately.

Plummer block housings SNV with a bearing fitted give non-locating bearing arrangements. These can be converted into locating bearing arrangements through the additional insertion of locating rings FRM.

The ordering examples show the construction of orders for selected housing combinations and the appropriate bearings. The allocation of housings, bearings and accessories for all housing sizes is shown in the product tables ➤ *1586*.

Example 1

Plummer block housing SNV made from flake graphite cast iron, closed on one side, self-aligning ball bearing 2210-K-TVH-C3 as locating bearing, location by means of an adapter sleeve on shaft diameter of 45 mm, double lip seal.

✎ *Order*

1 plummer block housing	SNV090-F-L
1 self-aligning ball bearing	2210-K-TVH-C3
1 adapter sleeve	H310
2 locating rings	FRM90/9
1 cover	DKV090
1 double lip seal	DH510 (2 pieces per pack)

Example 2

Plummer block housing SNV made from flake graphite cast iron, for continuous shaft, split spherical roller bearing 222SM70-TVPA as locating bearing, double lip seal.

✎ *Order*

1 plummer block housing	SNV140-F-L
1 split spherical roller bearing	222SM70-TVPA
2 locating rings	FRM140/12,5
2 double lip seals	DH516 (2 pieces per pack)

Example 3

Plummer block housing SNV made from spheroidal graphite cast iron, closed on one side, spherical roller bearing 23218-E1-TVPB as non-locating bearing, felt seal.

✎ *Order*

1 plummer block housing	SNV160-F-D
1 spherical roller bearing	23218-E1-TVPB
1 shaft nut	KM18
1 tab washer	MB18
1 cover	DKV160
1 felt seal	FSV218 (2 pieces per pack)



2.11 Mounting and dismounting

Eye bolts

In the case of housing size SNV215 and larger, the upper housing section has an eye bolt in accordance with DIN 580. This is intended as a locating point for mounting and dismounting of the housing. The load carrying capacity of the eye bolt allows lifting of the housing including a bearing fitted in the housing.

The eye bolt must always be screwed fully into the housing.

The eye bolt must not be subjected to a mass greater than that of the housing together with the bearing fitted in the housing.

Foot screws

Foot screws are used for screw mounting of the housing to the mounting surface. They are not included in the scope of delivery of the housings.

The appropriate screw size for each housing is given in the product tables ➤ *1586*.

✎ *Tightening torques for foot screws*

The following table contains tightening torques for metric coarse pitch threads in accordance with DIN 13, DIN 962 and DIN ISO 965-2.

The tightening torques are maximum values when utilising 90% of the yield stress of the screw material 8.8 and with a friction factor of 0,14. We recommend that foot screws should be tightened to approx. 70% of these values ➤ *1584*.

12
Tightening torques for foot screws with metric thread in accordance with DIN 13, DIN 962 and DIN ISO 965-2

Nominal screw diameter	Maximum tightening torque Nm	Recommended tightening torque Nm
M12	93	65
M16	230	160
M20	464	325
M24	798	550
M30	1 597	1 100
M36	2 778	1 950

Detailed information on mounting

Careful and correct mounting of the bearing housing, including the correct mounting of the rolling bearing in the housing, is fundamental to reliable operation. Comprehensive information is given in Catalogue GK 1, Bearing Housings *https://www.schaeffler.de/std/1D54*.

2.12 Legal notice regarding data freshness

The further development of products may also result in technical changes to catalogue products

Of central interest to Schaeffler is the further development and optimisation of its products and the satisfaction of its customers. In order that you, as the customer, can keep yourself optimally informed about the progress that is being made here and with regard to the current technical status of the products, we publish any product changes which differ from the printed version in our electronic product catalogue.

We therefore reserve the right to make changes to the data and illustrations in this catalogue. This catalogue reflects the status at the time of printing. More recent publications released by us (as printed or digital media) will automatically precede this catalogue if they involve the same subject. Therefore, please always use our electronic product catalogue to check whether more up-to-date information or modification notices exist for your desired product.

Link to electronic product catalogue

The following link will take you to the Schaeffler electronic product catalogue: *https://medias.schaeffler.com*.

2.13 Further information

In addition to the data in this chapter, the following chapters must also be observed in the selection of a housing:

- Lubrication ➤*70|6*
- Locating and non-locating bearing concepts ➤*1559|1.2*
- Housing materials ➤*1561|1.3*

Further information:

- Product tables on split plummer block housings SNV for inch size shaft diameters GK 1
- Electronic housing selection wizard *https://www.schaeffler.de/std/1D61*



Plummer block housings

SNV, split
For bearings with tapered bore and adapter sleeve, metric shaft

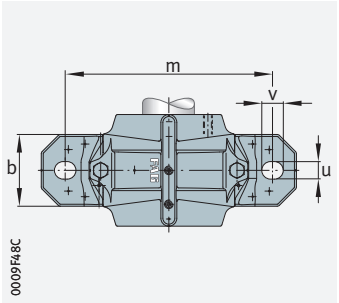

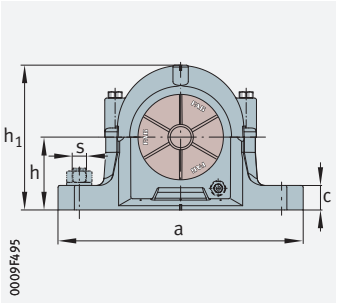

d_1 = 20 – 35 mm

Shaft	Housing														Housing
	Dimensions													Mass	Designation
d_1	h	h_1	g	b	c	a	m	v	u	s		D	g_3	m	➤*1580|2.10*
mm										mm	inch			≈ kg	
20	40	75	70	46	19	165	130	20	15	M12	1/2	52	10,5	1,3	**SNV052-F-L**
	50	91	75	52	22	185	150	20	15	M12	1/2	62	10,5	1,9	**SNV062-F-L**
	40	75	70	46	19	165	130	20	15	M12	1/2	52	10,5	1,3	**SNV052-F-L**
	40	75	70	46	19	165	130	20	15	M12	1/2	52	10,5	1,3	**SNV052-F-L**
	40	75	70	46	19	165	130	20	15	M12	1/2	52	10,5	1,3	**SNV052-F-L**
	50	91	75	52	22	185	150	20	15	M12	1/2	62	10,5	1,9	**SNV062-F-L**
25	50	91	75	52	22	185	150	20	15	M12	1/2	62	10,5	1,9	**SNV062-F-L**
	50	97	80	52	22	185	150	20	15	M12	1/2	72	10,5	2	**SNV072-F-L**
	50	91	75	52	22	185	150	20	15	M12	1/2	62	10,5	1,9	**SNV062-F-L**
	50	91	75	52	22	185	150	20	15	M12	1/2	62	10,5	1,9	**SNV062-F-L**
	50	91	75	52	22	185	150	20	15	M12	1/2	62	10,5	1,9	**SNV062-F-L**
	50	97	80	52	22	185	150	20	15	M12	1/2	72	10,5	2	**SNV072-F-L**
30	50	97	80	52	22	185	150	20	15	M12	1/2	72	10,5	2	**SNV072-F-L**
	60	112	85	60	25	205	170	20	15	M12	1/2	80	10,5	2,9	**SNV080-F-L**
	50	97	80	52	22	185	150	20	15	M12	1/2	72	10,5	2	**SNV072-F-L**
	60	112	85	60	25	205	170	20	15	M12	1/2	80	10,5	2,9	**SNV080-F-L**
	50	97	80	52	22	185	150	20	15	M12	1/2	72	10,5	2	**SNV072-F-L**
	50	97	80	52	22	185	150	20	15	M12	1/2	72	10,5	2	**SNV072-F-L**
	60	112	85	60	25	205	170	20	15	M12	1/2	80	10,5	2,9	**SNV080-F-L**
35	60	112	85	60	25	205	170	20	15	M12	1/2	80	10,5	2,9	**SNV080-F-L**
	60	117	100	60	25	205	170	20	15	M12	1/2	90	12,5	3,1	**SNV090-F-L**
	60	112	85	60	25	205	170	20	15	M12	1/2	80	10,5	2,9	**SNV080-F-L**
	60	117	100	60	25	205	170	20	15	M12	1/2	90	12,5	3,1	**SNV090-F-L**
	60	112	85	60	25	205	170	20	15	M12	1/2	80	10,5	2,9	**SNV080-F-L**
	60	112	85	60	25	205	170	20	15	M12	1/2	80	10,5	2,9	**SNV080-F-L**
	60	117	100	60	25	205	170	20	15	M12	1/2	90	12,5	3,1	**SNV090-F-L**
	60	117	100	60	25	205	170	20	15	M12	1/2	90	12,5	3,1	**SNV090-F-L**

medias *https://www.schaeffler.de/std/1F9A*

① Locating bearing; ② Non-locating bearing

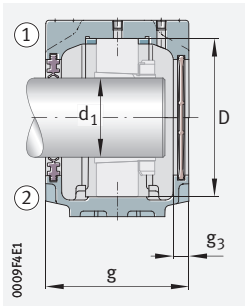

Double lip seal DH
Cover DKV

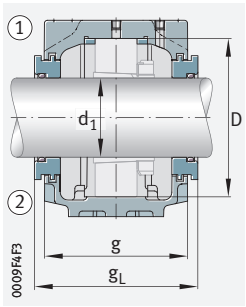

Labyrinth seal TSV

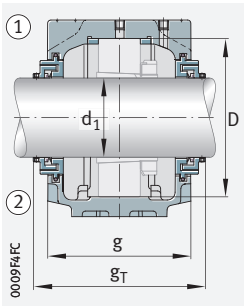

Taconite seal TCV

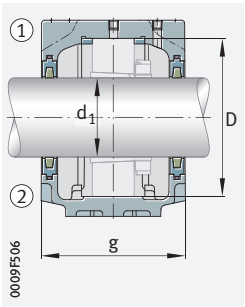

Felt seal FSV

Bearings and accessories

Bearing	Adapter sleeve	Locating ring 2 pieces	Double lip seal	Felt seal	Labyrinth seal		V ring seal		Taconite seal		Cover
						g_L mm		g_V mm		g_T mm	
1205-K	H205	FRM52/6	DH505	FSV505	TSV505	83	DHV505	76	–	–	DKV052
1305-K	H305	FRM62/6,5	DH605	FSV605	TSV605	88	DHV605	81	–	–	DKV062
20205-K	H205	FRM52/6	DH505	FSV505	TSV505	83	DHV505	76	–	–	DKV052
2205-K	H305	FRM52/4,5	DH505	FSV505	TSV505	83	DHV505	76	–	–	DKV052
22205..-K	H305	FRM52/4,5	DH505	FSV505	TSV505	83	DHV505	76	–	–	DKV052
2305-K	H2305	FRM62/3	DH605	FSV605	TSV605	88	DHV605	81	–	–	DKV062
1206-K	H206	FRM62/7	DH506	FSV506	TSV506	88	DHV506	81	–	–	DKV062
1306-K	H306	FRM72/7	DH606	FSV606	TSV606	93	DHV606	86	TCV606	117	DKV072
20206-K	H206	FRM62/7	DH506	FSV506	TSV506	88	DHV506	81	–	–	DKV062
2206-K	H306	FRM62/5	DH506	FSV506	TSV506	88	DHV506	81	–	–	DKV062
22206..-K	H306	FRM62/5	DH506	FSV506	TSV506	88	DHV506	81	–	–	DKV062
2306-K	H2306	FRM72/3	DH606	FSV606	TSV606	93	DHV606	86	TCV606	117	DKV072
1207-K	H207	FRM72/8	DH507	FSV507	TSV507	93	DHV507	86	–	–	DKV072
1307-K	H307	FRM80/9	DH607	FSV607	TSV607	98	DHV607	91	TCV607	122	DKV080
20207-K	H207	FRM72/8	DH507	FSV507	TSV507	93	DHV507	86	–	–	DKV072
21307..-K	H307	FRM80/9	DH607	FSV607	TSV607	98	DHV607	91	TCV607	122	DKV080
2207-K	H307	FRM72/5	DH507	FSV507	TSV507	93	DHV507	86	–	–	DKV072
22207..-K	H307	FRM72/5	DH507	FSV507	TSV507	93	DHV507	86	–	–	DKV072
2307-K	H2307	FRM80/4	DH607	FSV607	TSV607	98	DHV607	91	TCV607	122	DKV080
1208-K	H208	FRM80/10,5	DH508	FSV508	TSV508	98	DHV508	91	TCV508	122	DKV080
1308-K	H308	FRM90/9	DH608	FSV608	TSV608	114	DHV608	104	TCV608	136	DKV090
20208-K	H208	FRM80/10,5	DH508	FSV508	TSV508	98	DHV508	91	TCV508	122	DKV080
21308..-K	H308	FRM90/9	DH608	FSV608	TSV608	114	DHV608	104	TCV608	136	DKV090
2208-K	H308	FRM80/8	DH508	FSV508	TSV508	98	DHV508	91	TCV508	122	DKV080
22208..-K	H308	FRM80/8	DH508	FSV508	TSV508	98	DHV508	91	TCV508	122	DKV080
22308..-K	H2308	FRM90/4	DH608	FSV608	TSV608	114	DHV608	104	TCV608	136	DKV090
2308-K	H2308	FRM90/4	DH608	FSV608	TSV608	114	DHV608	104	TCV608	136	DKV090

Plummer block housings

SNV, split
For bearings with tapered bore and adapter sleeve, metric shaft

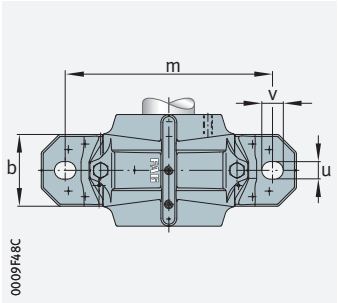

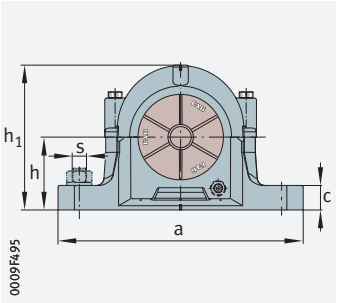

d_1 = 40 – 50 mm

Shaft	Housing													Housing
	Dimensions												Mass	Designation
d_1	h	h_1	g	b	c	a	m	v	u	s		D	g_3	m	➤*1580|2.10*
mm										mm	inch			≈ kg	
40	60	114	87	60	25	205	170	20	15	M12	1/2	85	12,5	2,8	**SNV085-F-L**
	70	133	105	70	28	255	210	23	18	M16	5/8	100	12,5	4,3	**SNV100-F-L**
	60	114	87	60	25	205	170	20	15	M12	1/2	85	12,5	2,8	**SNV085-F-L**
	70	133	105	70	28	255	210	23	18	M16	5/8	100	12,5	4,3	**SNV100-F-L**
	60	114	87	60	25	205	170	20	15	M12	1/2	85	12,5	2,8	**SNV085-F-L**
	60	114	87	60	25	205	170	20	15	M12	1/2	85	12,5	2,8	**SNV085-F-L**
	70	133	105	70	28	255	210	23	18	M16	5/8	100	12,5	4,3	**SNV100-F-L**
	70	133	105	70	28	255	210	23	18	M16	5/8	100	12,5	4,3	**SNV100-F-L**
45	60	117	100	60	25	205	170	20	15	M12	1/2	90	12,5	3,1	**SNV090-F-L**
	70	139	110	70	30	255	210	23	18	M16	5/8	110	12,5	4,9	**SNV110-F-L**
	60	117	100	60	25	205	170	20	15	M12	1/2	90	12,5	3,1	**SNV090-F-L**
	70	139	110	70	30	255	210	23	18	M16	5/8	110	12,5	4,9	**SNV110-F-L**
	60	117	100	60	25	205	170	20	15	M12	1/2	90	12,5	3,1	**SNV090-F-L**
	60	117	100	60	25	205	170	20	15	M12	1/2	90	12,5	3,1	**SNV090-F-L**
	70	139	110	70	30	255	210	23	18	M16	5/8	110	12,5	4,9	**SNV110-F-L**
	70	139	110	70	30	255	210	23	18	M16	5/8	110	12,5	4,9	**SNV110-F-L**
50	70	133	105	70	28	255	210	23	18	M16	5/8	100	12,5	4,3	**SNV100-F-L**
	80	155	115	80	30	275	230	23	18	M16	5/8	120	12,5	6,1	**SNV120-F-L**
	70	133	105	70	28	255	210	23	18	M16	5/8	100	12,5	4,3	**SNV100-F-L**
	80	155	115	80	30	275	230	23	18	M16	5/8	120	12,5	6,1	**SNV120-F-L**
	80	155	115	80	30	275	230	23	18	M16	5/8	120	12,5	6,1	**SNV120-F-L**
	70	133	105	70	28	255	210	23	18	M16	5/8	100	12,5	4,3	**SNV100-F-L**
	70	133	105	70	28	255	210	23	18	M16	5/8	100	12,5	4,3	**SNV100-F-L**
	80	155	115	80	30	275	230	23	18	M16	5/8	120	12,5	6,1	**SNV120-F-L**
	80	155	115	80	30	275	230	23	18	M16	5/8	120	12,5	6,1	**SNV120-F-L**

medias *https://www.schaeffler.de/std/1F9A*

① Locating bearing; ② Non-locating bearing

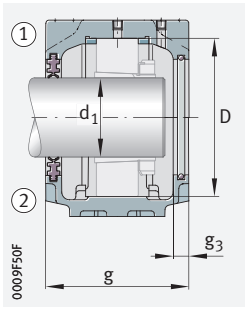

Double lip seal DH
Cover DKVT

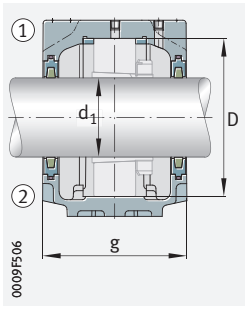

Felt seal FSV

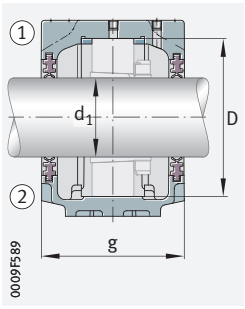

Double lip seal DH

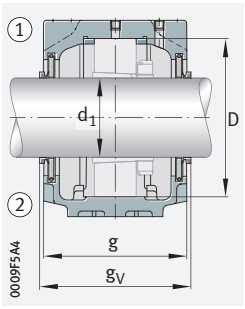

V ring seal DHV

Bearings and accessories

Bearing	Adapter sleeve	Locating ring 2 pieces	Double lip seal	Felt seal	Labyrinth seal		V ring seal		Taconite seal		Cover
						g_L mm		g_V mm		g_T mm	
1209-K	H209	FRM85/6	DH509	FSV509	TSV509	101	DHV509	93	TCV509	125	DKV085
1309-K	H309	FRM100/9,5	DH609	FSV609	TSV609	119	DHV609	111	TCV609	143	DKV100
20209-K	H209	FRM85/6	DH509	FSV509	TSV509	101	DHV509	93	TCV509	125	DKV085
21309..-K	H309	FRM100/9,5	DH609	FSV609	TSV609	119	DHV609	111	TCV609	143	DKV100
2209-K	H309	FRM85/4	DH509	FSV509	TSV509	101	DHV509	93	TCV509	125	DKV085
22209..-K	H309	FRM85/4	DH509	FSV509	TSV509	101	DHV509	93	TCV509	125	DKV085
22309..-K	H2309	FRM100/4	DH609	FSV609	TSV609	119	DHV609	111	TCV609	143	DKV100
2309-K	H2309	FRM100/4	DH609	FSV609	TSV609	119	DHV609	111	TCV609	143	DKV100
1210-K	H210	FRM90/10,5	DH510	FSV510	TSV510	114	DHV510	106	TCV510	138	DKV090
1310-K	H310	FRM110/10,5	DH610	FSV610	TSV610	124	DHV610	116	TCV610	148	DKV110
20210-K	H210	FRM90/10,5	DH510	FSV510	TSV510	114	DHV510	106	TCV510	138	DKV090
21310..-K	H310	FRM110/10,5	DH610	FSV610	TSV610	124	DHV610	116	TCV610	148	DKV110
2210-K	H310	FRM90/9	DH510	FSV510	TSV510	114	DHV510	106	TCV510	138	DKV090
22210..-K	H310	FRM90/9	DH510	FSV510	TSV510	114	DHV510	106	TCV510	138	DKV090
22310..-K	H2310	FRM110/4	DH610	FSV610	TSV610	124	DHV610	116	TCV610	148	DKV110
2310-K	H2310	FRM110/4	DH610	FSV610	TSV610	124	DHV610	116	TCV610	148	DKV110
1211-K	H211	FRM100/11,5	DH511	FSV511	TSV511	119	DHV511	111	TCV511	143	DKV100
1311-K	H311	FRM120/11	DH611	FSV611	TSV611	129	DHV611	121	TCV611	153	DKV120
20211-K	H211	FRM100/11,5	DH511	FSV511	TSV511	119	DHV511	111	TCV511	143	DKV100
20311-K	H311	FRM120/11	DH611	FSV611	TSV611	129	DHV611	121	TCV611	153	DKV120
21311..-K	H311	FRM120/11	DH611	FSV611	TSV611	129	DHV611	121	TCV611	153	DKV120
2211-K	H311	FRM100/9,5	DH511	FSV511	TSV511	119	DHV511	111	TCV511	143	DKV100
22211..-K	H311	FRM100/9,5	DH511	FSV511	TSV511	119	DHV511	111	TCV511	143	DKV100
22311..-K	H2311	FRM120/4	DH611	FSV611	TSV611	129	DHV611	121	TCV611	153	DKV120
2311-K	H2311	FRM120/4	DH611	FSV611	TSV611	129	DHV611	121	TCV611	153	DKV120

Plummer block housings

SNV, split
For bearings with tapered bore and adapter sleeve, metric shaft

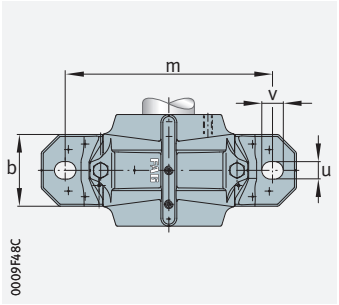

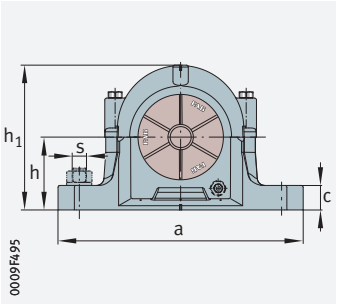

d_1 = 55 – 65 mm

Shaft	Housing													Housing
	Dimensions												Mass	Designation
d_1	h	h_1	g	b	c	a	m	v	u	s		D	g_3	m	➤*1580|2.10*
mm										mm	inch			≈ kg	
55	70	139	110	70	30	255	210	23	18	M16	5/8	110	12,5	4,9	**SNV110-F-L**
	80	161	120	80	30	280	230	23	18	M16	5/8	130	12,5	6,8	**SNV130-F-L**
	70	139	110	70	30	255	210	23	18	M16	5/8	110	12,5	4,9	**SNV110-F-L**
	80	161	120	80	30	280	230	23	18	M16	5/8	130	12,5	6,8	**SNV130-F-L**
	80	161	120	80	30	280	230	23	18	M16	5/8	130	12,5	6,8	**SNV130-F-L**
	70	139	110	70	30	255	210	23	18	M16	5/8	110	12,5	4,9	**SNV110-F-L**
	70	139	110	70	30	255	210	23	18	M16	5/8	110	12,5	4,9	**SNV110-F-L**
	80	161	120	80	30	280	230	23	18	M16	5/8	130	12,5	6,8	**SNV130-F-L**
	80	161	120	80	30	280	230	23	18	M16	5/8	130	12,5	6,8	**SNV130-F-L**
60	80	155	115	80	30	275	230	23	18	M16	5/8	120	12,5	6,1	**SNV120-F-L**
	95	183	135	90	32	315	260	27	22	M20	3/4	140	15	9,3	**SNV140-F-L**
	80	155	115	80	30	275	230	23	18	M16	5/8	120	12,5	6,1	**SNV120-F-L**
	95	183	135	90	32	315	260	27	22	M20	3/4	140	15	9,3	**SNV140-F-L**
	95	183	135	90	32	315	260	27	22	M20	3/4	140	15	9,3	**SNV140-F-L**
	80	155	115	80	30	275	230	23	18	M16	5/8	120	12,5	6,1	**SNV120-F-L**
	80	155	115	80	30	275	230	23	18	M16	5/8	120	12,5	6,1	**SNV120-F-L**
	95	183	135	90	32	315	260	27	22	M20	3/4	140	15	9,3	**SNV140-F-L**
	95	183	135	90	32	315	260	27	22	M20	3/4	140	15	9,3	**SNV140-F-L**
65	80	161	120	80	30	280	230	23	18	M16	5/8	130	12,5	6,8	**SNV130-F-L**
	100	201	145	100	35	345	290	27	22	M20	3/4	160	15	12,8	**SNV160-F-L**
	80	161	120	80	30	280	230	23	18	M16	5/8	130	12,5	6,8	**SNV130-F-L**
	100	201	145	100	35	345	290	27	22	M20	3/4	160	15	12,8	**SNV160-F-L**
	80	161	120	80	30	280	230	23	18	M16	5/8	130	12,5	6,8	**SNV130-F-L**
	80	161	120	80	30	280	230	23	18	M16	5/8	130	12,5	6,8	**SNV130-F-L**
	100	201	145	100	35	345	290	27	22	M20	3/4	160	15	12,8	**SNV160-F-L**
	100	201	145	100	35	345	290	27	22	M20	3/4	160	15	12,8	**SNV160-F-L**

medias *https://www.schaeffler.de/std/1F9A*

① Locating bearing; ② Non-locating bearing

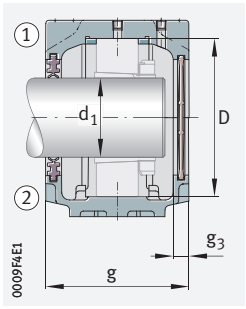

Double lip seal DH
Cover DKV

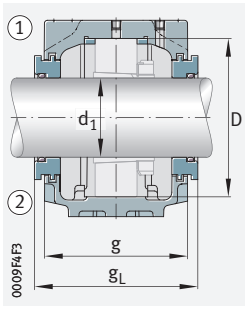

Labyrinth seal TSV

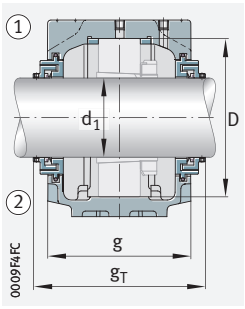

Taconite seal TCV

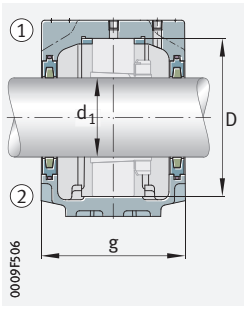

Felt seal FSV

Bearings and accessories

Bearing	Adapter sleeve	Locating ring 2 pieces	Double lip seal	Felt seal	Labyrinth seal		V ring seal		Taconite seal		Cover
						g_L mm		g_V mm		g_T mm	
1212-K	H212	FRM110/13	DH512	FSV512	TSV512	124	DHV512	116	TCV512	148	DKV110
1312-K	H312	FRM130/12,5	DH612	FSV612	TSV612	134	DHV612	126	TCV612	158	DKV130
20212-K	H212	FRM110/13	DH512	FSV512	TSV512	124	DHV512	116	TCV512	148	DKV110
20312-K	H312	FRM130/12,5	DH612	FSV612	TSV612	134	DHV612	126	TCV612	158	DKV130
21312..-K	H312	FRM130/12,5	DH612	FSV612	TSV612	134	DHV612	126	TCV612	158	DKV130
2212-K	H312	FRM110/10	DH512	FSV512	TSV512	124	DHV512	116	TCV512	148	DKV110
22212..-K	H312	FRM110/10	DH512	FSV512	TSV512	124	DHV512	116	TCV512	148	DKV110
22312..-K	H2312	FRM130/5	DH612	FSV612	TSV612	134	DHV612	126	TCV612	158	DKV130
2312-K	H2312	FRM130/5	DH612	FSV612	TSV612	134	DHV612	126	TCV612	158	DKV130
1213-K	H213	FRM120/14	DH513	FSV513	TSV513	129	DHV513	121	TCV513	153	DKV120
1313-K	H313	FRM140/12,5	DH613	FSV613	TSV613	150,3	DHV613	139	TCV613	172	DKV140
20213-K	H213	FRM120/14	DH513	FSV513	TSV513	129	DHV513	121	TCV513	153	DKV120
20313-K	H313	FRM140/12,5	DH613	FSV613	TSV613	150,3	DHV613	139	TCV613	172	DKV140
21313..-K	H313	FRM140/12,5	DH613	FSV613	TSV613	150,3	DHV613	139	TCV613	172	DKV140
2213-K	H313	FRM120/10	DH513	FSV513	TSV513	129	DHV513	121	TCV513	153	DKV120
22213..-K	H313	FRM120/10	DH513	FSV513	TSV513	129	DHV513	121	TCV513	153	DKV120
22313..-K	H2313	FRM140/5	DH613	FSV613	TSV613	150,3	DHV613	139	TCV613	172	DKV140
2313-K	H2313	FRM140/5	DH613	FSV613	TSV613	150,3	DHV613	139	TCV613	172	DKV140
1215-K	H215	FRM130/15,5	DH515	FSV515	TSV515	134	DHV515	126	TCV515	158	DKV130
1315-K	H315	FRM160/14	DH615	FSV615	TSV615	160,3	DHV615	149	TCV615	182	DKV160
20215-K	H215	FRM130/15,5	DH515	FSV515	TSV515	134	DHV515	126	TCV515	158	DKV130
21315..-K	H315	FRM160/14	DH615	FSV615	TSV615	160,3	DHV615	149	TCV615	182	DKV160
2215-K	H315	FRM130/12,5	DH515	FSV515	TSV515	134	DHV515	126	TCV515	158	DKV130
22215..-K	H315	FRM130/12,5	DH515	FSV515	TSV515	134	DHV515	126	TCV515	158	DKV130
22315..-K	H2315	FRM160/5	DH615	FSV615	TSV615	160,3	DHV615	149	TCV615	182	DKV160
2315-K	H2315	FRM160/5	DH615	FSV615	TSV615	160,3	DHV615	149	TCV615	182	DKV160

Plummer block housings

SNV, split
For bearings with tapered bore and adapter sleeve, metric shaft

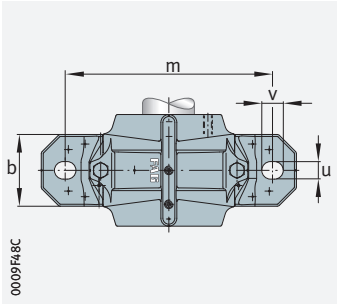

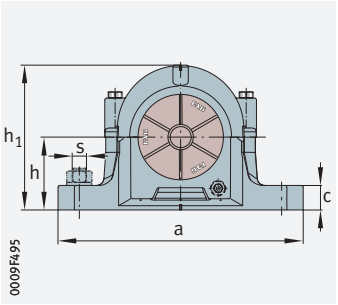

d_1 = 70 – 80 mm

Shaft	Housing													Housing
	Dimensions												Mass	Designation
d_1	h	h_1	g	b	c	a	m	v	u	s		D	g_3	m	➤*1580|2.10*
mm										mm	inch			≈ kg	
70	95	183	135	90	32	315	260	27	22	M20	3/4	140	15	9,3	**SNV140-F-L**
	112	219	150	100	35	345	290	27	22	M20	3/4	170	16	14,4	**SNV170-F-L**
	95	183	135	90	32	315	260	27	22	M20	3/4	140	15	9,3	**SNV140-F-L**
	112	219	150	100	35	345	290	27	22	M20	3/4	170	16	14,4	**SNV170-F-L**
	95	183	135	90	32	315	260	27	22	M20	3/4	140	15	9,3	**SNV140-F-L**
	95	183	135	90	32	315	260	27	22	M20	3/4	140	15	9,3	**SNV140-F-L**
	112	219	150	100	35	345	290	27	22	M20	3/4	170	16	14,4	**SNV170-F-L**
	112	219	150	100	35	345	290	27	22	M20	3/4	170	16	14,4	**SNV170-F-L**
75	95	189	140	90	32	320	260	27	22	M20	3/4	150	15	9,9	**SNV150-F-L**
	112	223	160	110	40	380	320	32	26	M24	7/8	180	16	17	**SNV180-F-L**
	95	189	140	90	32	320	260	27	22	M20	3/4	150	15	9,9	**SNV150-F-L**
	112	223	160	110	40	380	320	32	26	M24	7/8	180	16	17	**SNV180-F-L**
	95	189	140	90	32	320	260	27	22	M20	3/4	150	15	9,9	**SNV150-F-L**
	95	189	140	90	32	320	260	27	22	M20	3/4	150	15	9,9	**SNV150-F-L**
	112	223	160	110	40	380	320	32	26	M24	7/8	180	16	17	**SNV180-F-L**
	112	223	160	110	40	380	320	32	26	M24	7/8	180	16	17	**SNV180-F-L**
80	100	201	145	100	35	345	290	27	22	M20	3/4	160	15	12,8	**SNV160-F-L**
	112	229	155	110	40	380	320	32	26	M24	7/8	190	15	22	**SNV190-F-L**
	100	201	145	100	35	345	290	27	22	M20	3/4	160	15	12,8	**SNV160-F-L**
	112	229	155	110	40	380	320	32	26	M24	7/8	190	15	22	**SNV190-F-L**
	112	229	155	110	40	380	320	32	26	M24	7/8	190	15	22	**SNV190-F-L**
	100	201	145	100	35	345	290	27	22	M20	3/4	160	15	12,8	**SNV160-F-L**
	100	201	145	100	35	345	290	27	22	M20	3/4	160	15	12,8	**SNV160-F-L**
	112	229	155	110	40	380	320	32	26	M24	7/8	190	15	22	**SNV190-F-L**
	112	229	155	110	40	380	320	32	26	M24	7/8	190	15	22	**SNV190-F-L**
	100	201	145	100	35	345	290	27	22	M20	3/4	160	15	12,8	**SNV160-F-L**

medias *https://www.schaeffler.de/std/1F9A*

① Locating bearing; ② Non-locating bearing

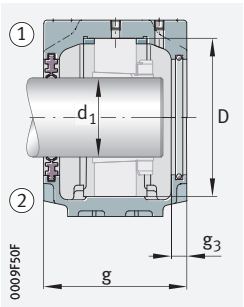

Double lip seal DH
Cover DKVT

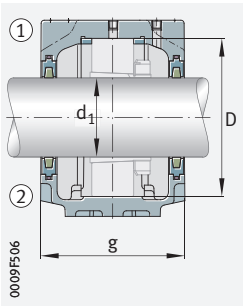

Felt seal FSV

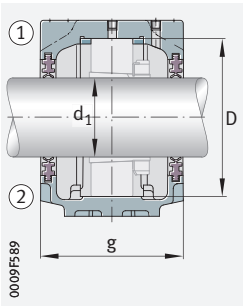

Double lip seal DH

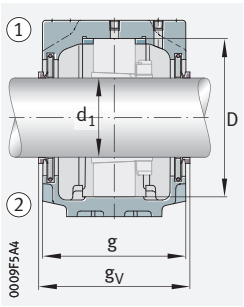

V ring seal DHV

Bearings and accessories

Bearing	Adapter sleeve	Locating ring 2 pieces	Double lip seal	Felt seal	Labyrinth seal		V ring seal		Taconite seal		Cover
						g_L mm		g_V mm		g_T mm	
1216-K	H216	FRM140/16	DH516	FSV516	TSV516	150,3	DHV516	143	TCV516	176	DKV140
1316-K	H316	FRM170/14,5	DH616	FSV616	TSV616	167,3	DHV616	158	TCV616	193	DKV170
20216-K	H216	FRM140/16	DH516	FSV516	TSV516	150,3	DHV516	143	TCV516	176	DKV140
21316..-K	H316	FRM170/14,5	DH616	FSV616	TSV616	167,3	DHV616	158	TCV616	193	DKV170
2216-K	H316	FRM140/12,5	DH516	FSV516	TSV516	150,3	DHV516	143	TCV516	176	DKV140
22216..-K	H316	FRM140/12,5	DH516	FSV516	TSV516	150,3	DHV516	143	TCV516	176	DKV140
22316..-K	H2316	FRM170/5	DH616	FSV616	TSV616	167,3	DHV616	158	TCV616	193	DKV170
2316-K	H2316	FRM170/5	DH616	FSV616	TSV616	167,3	DHV616	158	TCV616	193	DKV170
1217-K	H217	FRM150/16,5	DH517	FSV517	TSV517	155,3	DHV517	148	TCV517	181	DKV150
1317-K	H317	FRM180/14,5	DH617	FSV617	TSV617	177,3	DHV617	168	TCV617	203	DKV180
20217-K	H217	FRM150/16,5	DH517	FSV517	TSV517	155,3	DHV517	148	TCV517	181	DKV150
21317..-K	H317	FRM180/14,5	DH617	FSV617	TSV617	177,3	DHV617	168	TCV617	203	DKV180
2217-K	H317	FRM150/12,5	DH517	FSV517	TSV517	155,3	DHV517	148	TCV517	181	DKV150
22217..-K	H317	FRM150/12,5	DH517	FSV517	TSV517	155,3	DHV517	148	TCV517	181	DKV150
22317..-K	H2317	FRM180/5	DH617	FSV617	TSV617	177,3	DHV617	168	TCV617	203	DKV180
2317-K	H2317	FRM180/5	DH617	FSV617	TSV617	177,3	DHV617	168	TCV617	203	DKV180
1218-K	H218	FRM160/17,5	DH518	FSV518	TSV518	160,3	DHV518	153	TCV518	186	DKV160
1318-K	H318	FRM190/15,5	DH518	FSV518	TSV518	170,3	DHV518	163	TCV518	178	DKV160
20218-K	H218	FRM160/17,5	DH518	FSV518	TSV518	160,3	DHV518	153	TCV518	186	DKV160
20318-K	H318	FRM190/15,5	DH518	FSV518	TSV518	170,3	DHV518	163	TCV518	178	DKV160
21318..-K	H318	FRM190/15,5	DH518	FSV518	TSV518	170,3	DHV518	163	TCV518	178	DKV160
2218-K	H318	FRM160/12,5	DH518	FSV518	TSV518	160,3	DHV518	153	TCV518	186	DKV160
22218..-K	H318	FRM160/12,5	DH518	FSV518	TSV518	160,3	DHV518	153	TCV518	186	DKV160
22318..-K	H2318	FRM190/5	DH518	FSV518	TSV518	170,3	DHV518	163	TCV518	178	DKV160
2318-K	H2318	FRM190/5	DH518	FSV518	TSV518	170,3	DHV518	163	TCV518	178	DKV160
23218..-K	H2318	FRM160/6,3	DH518	FSV518	TSV518	160,3	DHV518	153	TCV518	186	DKV160

Plummer block housings

SNV, split
For bearings with tapered bore and adapter sleeve, metric shaft

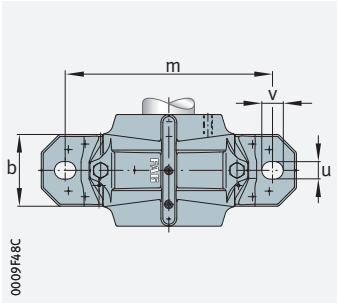

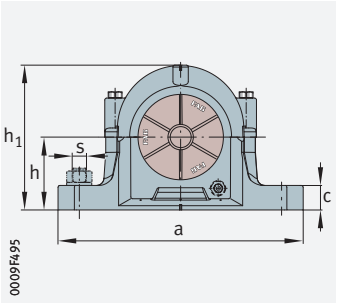

d_1 = 85 – 110 mm

Shaft	Housing														Housing
	Dimensions													Mass	Designation
d_1	h	h_1	g	b	c	a	m	v	u	s		D	g_3	m	➤*1580|2.10*
mm										mm	inch			≈ kg	
85	112	219	150	100	35	345	290	27	22	M20	3/4	170	16	14,4	**SNV170-F-L**
	125	248	175	120	45	410	350	32	26	M24	7/8	200	16	21	**SNV200-F-L**
	125	248	175	120	45	410	350	32	26	M24	7/8	200	16	21	**SNV200-F-L**
	112	219	150	100	35	345	290	27	22	M20	3/4	170	16	14,4	**SNV170-F-L**
	112	219	150	100	35	345	290	27	22	M20	3/4	170	16	14,4	**SNV170-F-L**
	125	248	175	120	45	410	350	32	26	M24	7/8	200	16	21	**SNV200-F-L**
	125	248	175	120	45	410	350	32	26	M24	7/8	200	16	21	**SNV200-F-L**
90	112	223	160	110	40	380	320	32	26	M24	7/8	180	16	17	**SNV180-F-L**
	140	271	180	120	45	410	350	32	26	M24	7/8	215	16	24,5	**SNV215-F-L**[1)]
	112	223	160	110	40	380	320	32	26	M24	7/8	180	16	17	**SNV180-F-L**
	140	271	180	120	45	410	350	32	26	M24	7/8	215	16	24,5	**SNV215-F-L**[1)]
	140	271	180	120	45	410	350	32	26	M24	7/8	215	16	24,5	**SNV215-F-L**[1)]
	112	223	160	110	40	380	320	32	26	M24	7/8	180	16	17	**SNV180-F-L**
	112	223	160	110	40	380	320	32	26	M24	7/8	180	16	17	**SNV180-F-L**
	140	271	180	120	45	410	350	32	26	M24	7/8	215	16	24,5	**SNV215-F-L**[1)]
	140	271	180	120	45	410	350	32	26	M24	7/8	215	16	24,5	**SNV215-F-L**[1)]
	112	223	160	110	40	380	320	32	26	M24	7/8	180	16	17	**SNV180-F-L**
100	125	248	175	120	45	410	350	32	26	M24	7/8	200	16	21	**SNV200-F-L**
	150	298	185	130	50	450	390	35	28	M24	1	240	18	32	**SNV240-F-L**[1)]
	125	248	175	120	45	410	350	32	26	M24	7/8	200	16	21	**SNV200-F-L**
	150	298	185	130	50	450	390	35	28	M24	1	240	18	32	**SNV240-F-L**[1)]
	125	248	175	120	45	410	350	32	26	M24	7/8	200	16	21	**SNV200-F-L**
	125	248	175	120	45	410	350	32	26	M24	7/8	200	16	21	**SNV200-F-L**
	150	298	185	130	50	450	390	35	28	M24	1	240	18	32	**SNV240-F-L**[1)]
	125	248	175	120	45	410	350	32	26	M24	7/8	200	16	21	**SNV200-F-L**
	150	298	185	130	50	450	390	35	28	M24	1	240	18	32	**SNV240-F-L**[1)]
110	140	271	180	120	45	410	350	32	26	M24	7/8	215	16	24,5	**SNV215-F-L**[1)]
	140	271	180	120	45	410	350	32	26	M24	7/8	215	16	24,5	**SNV215-F-L**[1)]
	160	321	190	160	60	530	450	42	35	M30	1 1/4	260	18	48	**SNV260-F-L**[1)]
	140	271	180	120	45	410	350	32	26	M24	7/8	215	16	24,5	**SNV215-F-L**[1)]

medias *https://www.schaeffler.de/std/1F9A*

① Locating bearing; ② Non-locating bearing

[1)] Housing with eye bolt.

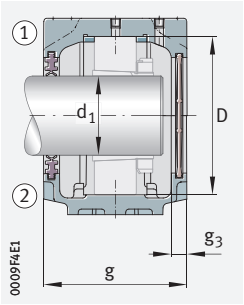

Double lip seal DH
Cover DKV

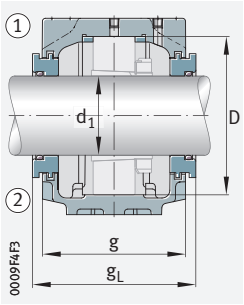

Labyrinth seal TSV

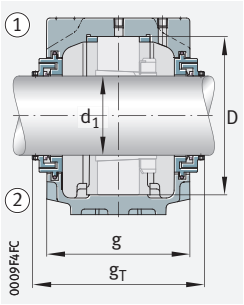

Taconite seal TCV

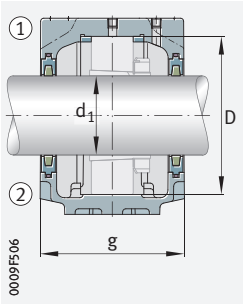

Felt seal FSV

Bearings and accessories

Bearing	Adapter sleeve	Locating ring 2 pieces	Double lip seal	Felt seal	Labyrinth seal		V ring seal		Taconite seal		Cover
						g_L mm		g_V mm		g_T mm	
1219-K	H219	FRM170/18	DH519	FSV519	TSV519	167,3	DHV519	158	TCV519	193	DKV170
1319-K	H319	FRM200/17,5	DH619	FSV619	TSV619	192,3	DHV619	183	TCV619	218	DKV200
21319..-K	H319	FRM200/17,5	DH619	FSV619	TSV619	192,3	DHV619	183	TCV619	218	DKV200
2219-K	H319	FRM170/12,5	DH519	FSV519	TSV519	167,3	DHV519	158	TCV519	193	DKV170
22219..-K	H319	FRM170/12,5	DH519	FSV519	TSV519	167,3	DHV519	158	TCV519	193	DKV170
22319..-K	H2319	FRM200/6,5	DH619	FSV619	TSV619	192,3	DHV619	183	TCV619	218	DKV200
2319-K	H2319	FRM200/6,5	DH619	FSV619	TSV619	192,3	DHV619	183	TCV619	218	DKV200
1220-K	H220	FRM180/18	DH520	FSV520	TSV520	177,3	DHV520	168	TCV520	203	DKV180
1320-K	H320	FRM215/19,5	DH620	FSV620	TSV620	197,3	DHV620	188	TCV620	224	DKV215
20220-K	H220	FRM180/18	DH520	FSV520	TSV520	177,3	DHV520	168	TCV520	203	DKV180
20320-K	H320	FRM215/19,5	DH620	FSV620	TSV620	197,3	DHV620	188	TCV620	224	DKV215
21320..-K	H320	FRM215/19,5	DH620	FSV620	TSV620	197,3	DHV620	188	TCV620	224	DKV215
2220-K	H320	FRM180/12	DH520	FSV520	TSV520	177,3	DHV520	168	TCV520	203	DKV180
22220..-K	H320	FRM180/12	DH520	FSV520	TSV520	177,3	DHV520	168	TCV520	203	DKV180
22320..-K	H2320	FRM215/6,5	DH620	FSV620	TSV620	197,3	DHV620	188	TCV620	224	DKV215
2320-K	H2320	FRM215/6,5	DH620	FSV620	TSV620	197,3	DHV620	188	TCV620	224	DKV215
23220..-K	H2320	FRM180/4,85	DH520	FSV520	TSV520	177,3	DHV520	168	TCV520	203	DKV180
1222-K	H222	FRM200/21	DH522	FSV522	TSV522	195,3	DHV522	183	TCV522	218	DKV200
1322-K	H322	FRM240/20	DH522	FSV522	TSV522	203,3	DHV522	191	TCV522	226	DKV200
20222-K	H222	FRM200/21	DH522	FSV522	TSV522	195,3	DHV522	183	TCV522	218	DKV200
21322..-K	H322	FRM240/20	DH522	FSV522	TSV522	203,3	DHV522	191	TCV522	226	DKV200
22222..-K	H322	FRM200/13,5	DH522	FSV522	TSV522	195,3	DHV522	183	TCV522	218	DKV200
2222-K	H322	FRM200/13,5	DH522	FSV522	TSV522	195,3	DHV522	183	TCV522	218	DKV200
22322..-K	H2322	FRM240/5	DH522	FSV522	TSV522	203,3	DHV522	191	TCV522	226	DKV200
23222..-K	H2322	FRM200/5,1	DH522	FSV522	TSV522	195,3	DHV522	183	TCV522	218	DKV200
2322-K	H2322	FRM240/5	DH522	FSV522	TSV522	203,3	DHV522	191	TCV522	226	DKV200
20224-K	H3024	FRM215/23	DH524	FSV524	TSV524	200,3	DHV524	191	TCV524	227	DKV215
22224..-K	H3124	FRM215/14	DH524	FSV524	TSV524	200,3	DHV524	191	TCV524	227	DKV215
22324..-K	H2324	FRM260/5	DH524	FSV524	TSV524	208,3	DHV524	199	TCV524	235	DKV215
23224..-K	H2324	FRM215/5	DH524	FSV524	TSV524	200,3	DHV524	191	TCV524	227	DKV215

Plummer block housings

SNV, split
For bearings with tapered bore and adapter sleeve, metric shaft

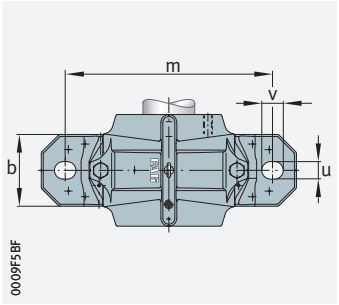

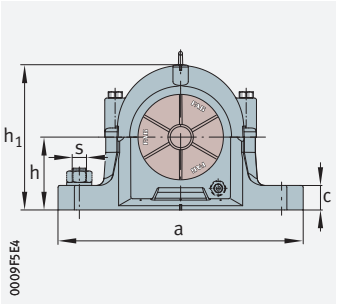

d_1 = 115 – 140 mm

Shaft	Housing													Housing
	Dimensions												Mass	Designation
d_1	h	h_1	g	b	c	a	m	v	u	s		D	g_3	m	➤*1580|2.10*
mm										mm	inch			≈ kg	
115	150	291	190	130	50	445	380	35	28	M24	1	230	18	30	**SNV230-F-L**
	150	291	190	130	50	445	380	35	28	M24	1	230	18	30	**SNV230-F-L**
	170	344	205	160	60	550	470	42	35	M30	$1^1/_4$	280	18	55	**SNV280-F-L**
	150	291	190	130	50	445	380	35	28	M24	1	230	18	30	**SNV230-F-L**
125	150	304	200	150	50	500	420	42	35	M30	$1^1/_4$	250	18	38	**SNV250-F-L**
	150	304	200	150	50	500	420	42	35	M30	$1^1/_4$	250	18	38	**SNV250-F-L**
	180	366	215	170	65	620	520	42	35	M30	$1^1/_4$	300	18	70	**SNV300-F-L**
	150	304	200	150	50	500	420	42	35	M30	$1^1/_4$	250	18	38	**SNV250-F-L**
135	160	328	215	160	60	530	450	42	35	M30	$1^1/_4$	270	18	45,5	**SNV270-F-L**
	160	328	215	160	60	530	450	42	35	M30	$1^1/_4$	270	18	45,5	**SNV270-F-L**
	190	386	225	180	65	650	560	42	35	M30	$1^1/_4$	320	18	95	**SNV320-F-L**
	160	328	215	160	60	530	450	42	35	M30	$1^1/_4$	270	18	45,5	**SNV270-F-L**
140	170	351	225	160	60	550	470	42	35	M30	$1^1/_4$	290	18	53,8	**SNV290-F-L**
	170	351	225	160	60	550	470	42	35	M30	$1^1/_4$	290	18	53,8	**SNV290-F-L**
	200	406	235	190	70	680	580	50	42	M36	$1^1/_2$	340	18	115	**SNV340-F-L**
	170	351	225	160	60	550	470	42	35	M30	$1^1/_4$	290	18	53,8	**SNV290-F-L**

medias *https://www.schaeffler.de/std/1F9A*

① Locating bearing; ② Non-locating bearing

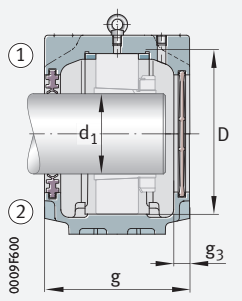

Double lip seal DH
Cover DKV

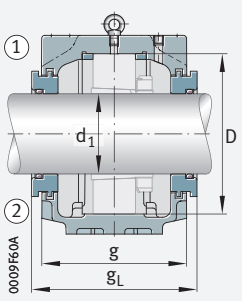

Labyrinth seal TSV

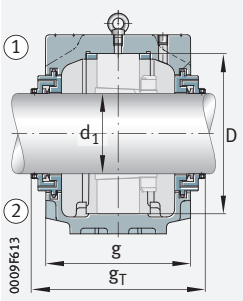

Taconite seal TCV

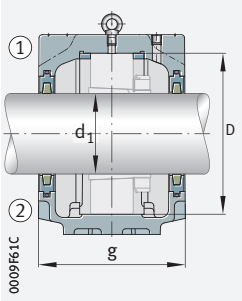

Felt seal FSV

Bearings and accessories

Bearing	Adapter sleeve	Locating ring 2 pieces	Double lip seal	Felt seal	Labyrinth seal		V ring seal		Taconite seal		Cover
						g_L mm		g_V mm		g_T mm	
20226-K	H3026	FRM230/25	DH526	FSV526	TSV526	208,3	DHV526	199	TCV526	235	DKV230
22226..-K	H3126	FRM230/13	DH526	FSV526	TSV526	208,3	DHV526	199	TCV526	235	DKV230
22326..-K	H2326	FRM280/5	DH526	FSV526	TSV526	223,3	DHV526	214	TCV526	250	DKV230
23226..-K	H2326	FRM230/5	DH526	FSV526	TSV526	208,3	DHV526	199	TCV526	235	DKV230
20228-K	H3028	FRM250/28	DH528	FSV528	TSV528	218,3	DHV528	209	TCV528	245	DKV250
22228..-K	H3128	FRM250/15	DH528	FSV528	TSV528	218,3	DHV528	209	TCV528	245	DKV250
22328..-K	H2328	FRM300/5	DH528	FSV528	TSV528	233,3	DHV528	224	TCV528	260	DKV250
23228..-K	H2328	FRM250/5	DH528	FSV528	TSV528	218,3	DHV528	209	TCV528	245	DKV250
20230-K	H3030	FRM270/30,5	DH530	FSV530	TSV530	233,3	DHV530	224	TCV530	260	DKV270
22230..-K	H3130	FRM270/16,5	DH530	FSV530	TSV530	233,3	DHV530	224	TCV530	260	DKV270
22330..-K	H2330	FRM320/5	DH530	FSV530	TSV530	243,3	DHV530	234	TCV530	270	DKV270
23230..-K	H2330	FRM270/5	DH530	FSV530	TSV530	233,3	DHV530	224	TCV530	260	DKV270
20232-K	H3032(-HG)	FRM290/33	DH532	FSV532	TSV532	243,3	DHV532	234	TCV532	270	DKV290
22232..-K	H3132(-HG)	FRM290/17	DH532	FSV532	TSV532	243,3	DHV532	234	TCV532	270	DKV290
22332-K	H2332(-HG)	FRM340/5	DH532	FSV532	TSV532	253,3	DHV532	244	TCV532	298	DKV290
23232..-K	H2332(-HG)	FRM290/5	DH532	FSV532	TSV532	243,3	DHV532	234	TCV532	270	DKV290

Plummer block housings

SNV, split
For bearings
with cylindrical bore,
metric shaft

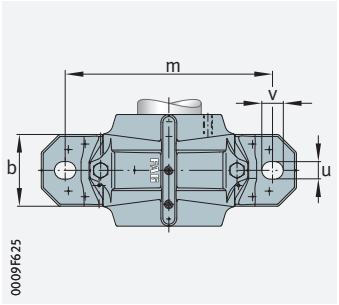

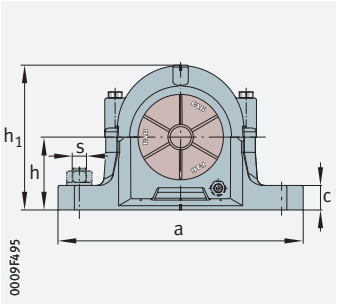

d = 20 – 35 mm

Shaft		Housing													Housing
		Dimensions												Mass	Designation
d	d_2	h	h_1	g	b	c	a	m	v	u	s	D	g_3	m	➤*1580|2.10*
											mm / inch			≈ kg	
20	25	40	75	70	46	19	165	130	20	15	M12 / 1/2	52	10,5	1,3	**SNV052-F-L**
	25	40	75	70	46	19	165	130	20	15	M12 / 1/2	52	10,5	1,3	**SNV052-F-L**
	25	40	75	70	46	19	165	130	20	15	M12 / 1/2	52	10,5	1,3	**SNV052-F-L**
	25	40	75	70	46	19	165	130	20	15	M12 / 1/2	52	10,5	1,3	**SNV052-F-L**
25	30	40	75	70	46	19	165	130	20	15	M12 / 1/2	52	10,5	1,3	**SNV052-F-L**
	30	50	91	75	52	22	185	150	20	15	M12 / 1/2	62	10,5	1,9	**SNV062-F-L**
	30	40	75	70	46	19	165	130	20	15	M12 / 1/2	52	10,5	1,3	**SNV052-F-L**
	30	50	91	75	52	22	185	150	20	15	M12 / 1/2	62	10,5	1,9	**SNV062-F-L**
	30	40	75	70	46	19	165	130	20	15	M12 / 1/2	52	10,5	1,3	**SNV052-F-L**
	30	50	91	75	52	22	185	150	20	15	M12 / 1/2	62	10,5	1,9	**SNV062-F-L**
	30	50	91	75	52	22	185	150	20	15	M12 / 1/2	62	10,5	1,9	**SNV062-F-L**
	30	40	75	70	46	19	165	130	20	15	M12 / 1/2	52	10,5	1,3	**SNV052-F-L**
30	35	50	91	75	52	22	185	150	20	15	M12 / 1/2	62	10,5	1,9	**SNV062-F-L**
	35	50	97	80	52	22	185	150	20	15	M12 / 1/2	72	10,5	2	**SNV072-F-L**
	35	50	91	75	52	22	185	150	20	15	M12 / 1/2	62	10,5	1,9	**SNV062-F-L**
	35	50	97	80	52	22	185	150	20	15	M12 / 1/2	72	10,5	2	**SNV072-F-L**
	35	50	91	75	52	22	185	150	20	15	M12 / 1/2	62	10,5	1,9	**SNV062-F-L**
	35	50	97	80	52	22	185	150	20	15	M12 / 1/2	72	10,5	2	**SNV072-F-L**
	35	50	97	80	52	22	185	150	20	15	M12 / 1/2	72	10,5	2	**SNV072-F-L**
	35	50	91	75	52	22	185	150	20	15	M12 / 1/2	62	10,5	1,9	**SNV062-F-L**
35	45	50	97	80	52	22	185	150	20	15	M12 / 1/2	72	10,5	2	**SNV072-F-L**
	45	60	112	85	60	25	205	170	20	15	M12 / 1/2	80	10,5	2,9	**SNV080-F-L**
	45	50	97	80	52	22	185	150	20	15	M12 / 1/2	72	10,5	2	**SNV072-F-L**
	45	60	112	85	60	25	205	170	20	15	M12 / 1/2	80	10,5	2,9	**SNV080-F-L**
	45	50	97	80	52	22	185	150	20	15	M12 / 1/2	72	10,5	2	**SNV072-F-L**
	45	60	112	85	60	25	205	170	20	15	M12 / 1/2	80	10,5	2,9	**SNV080-F-L**
	45	60	112	85	60	25	205	170	20	15	M12 / 1/2	80	10,5	2,9	**SNV080-F-L**
	45	50	97	80	52	22	185	150	20	15	M12 / 1/2	72	10,5	2	**SNV072-F-L**

medias *https://www.schaeffler.de/std/1F9A*

① Locating bearing; ② Non-locating bearing

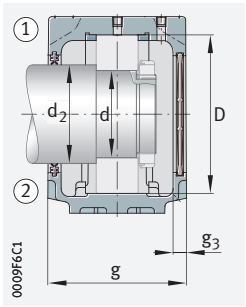

Double lip seal DH
Cover DKV

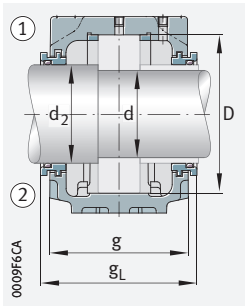

Labyrinth seal TSV

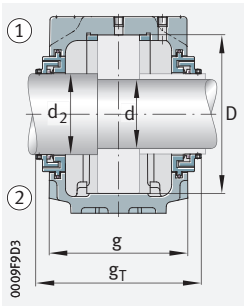

Taconite seal TCV

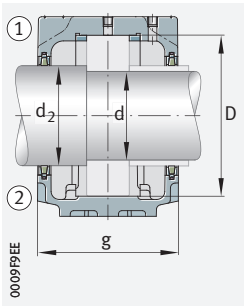

Felt seal FSV

Bearings and accessories

Bearing	Lock-nut	Tab washer	Locating ring 2 pieces	Double lip seal	Felt seal	Labyrinth seal		V ring seal		Taconite seal		Cover
							g_L mm		g_V mm		g_T mm	
1304	KM4	MB4	FRM52/6	DH304	–	TSV304	95	DHV304	76	–	–	DKV052
2304	KM4	MB4	FRM52/3	DH304	–	TSV304	95	DHV304	76	–	–	DKV052
20304	KM4	MB4	FRM52/6	DH304	–	TSV304	95	DHV304	76	–	–	DKV052
21304	KM4	MB4	FRM52/6	DH304	–	TSV304	95	DHV304	76	–	–	DKV052
1205	KM5	MB5	FRM52/6	DH205	–	TSV205	95	–	–	–	–	DKV052
1305	KM5	MB5	FRM62/6,5	DH305	FSV305	TSV305	100	DHV305	81	–	–	DKV062
2205	KM5	MB5	FRM52/4,5	DH205	–	TSV205	95	–	–	–	–	DKV052
2305	KM5	MB5	FRM62/3	DH305	FSV305	TSV305	100	DHV305	81	–	–	DKV062
20205	KM5	MB5	FRM52/6	DH205	–	TSV205	95	–	–	–	–	DKV052
20305	KM5	MB5	FRM62/6,5	DH305	FSV305	TSV305	100	DHV305	81	–	–	DKV062
21305	KM5	MB5	FRM62/6,5	DH305	FSV305	TSV305	100	DHV305	81	–	–	DKV062
22205	KM5	MB5	FRM52/4,5	DH205	–	TSV205	95	–	–	–	–	DKV052
1206	KM6	MB6	FRM62/7	DH206	–	TSV206	100	–	–	–	–	DKV062
1306	KM6	MB6	FRM72/7	DH306	FSV306	TSV306	93	DHV306	86	–	–	DKV072
2206	KM6	MB6	FRM62/5	DH206	–	TSV206	100	–	–	–	–	DKV062
2306	KM6	MB6	FRM72/3	DH306	FSV306	TSV306	93	DHV306	86	–	–	DKV072
20206	KM6	MB6	FRM62/7	DH206	–	TSV206	100	–	–	–	–	DKV062
20306	KM6	MB6	FRM72/7	DH306	FSV306	TSV306	93	DHV306	86	–	–	DKV072
21306	KM6	MB6	FRM72/7	DH306	FSV306	TSV306	93	DHV306	86	–	–	DKV072
22206	KM6	MB6	FRM62/5	DH206	–	TSV206	100	–	–	–	–	DKV062
1207	KM7	MB7	FRM72/8	DH207	–	TSV207	107	–	–	–	–	DKV072
1307	KM7	MB7	FRM80/9	DH307	FSV307	TSV307	98	DHV307	93	–	–	DKV080
2207	KM7	MB7	FRM72/5	DH207	–	TSV207	107	–	–	–	–	DKV072
2307	KM7	MB7	FRM80/4	DH307	FSV307	TSV307	98	DHV307	93	–	–	DKV080
20207	KM7	MB7	FRM72/8	DH207	–	TSV207	107	–	–	–	–	DKV072
20307	KM7	MB7	FRM80/9	DH307	FSV307	TSV307	98	DHV307	93	–	–	DKV080
21307	KM7	MB7	FRM80/9	DH307	FSV307	TSV307	98	DHV307	93	–	–	DKV080
22207	KM7	MB7	FRM72/5	DH207	–	TSV207	107	–	–	–	–	DKV072

Plummer block housings

SNV, split
For bearings
with cylindrical bore,
metric shaft

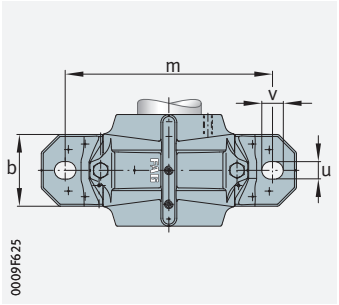

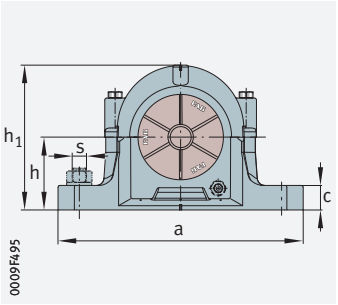

d = 40 – 50 mm

Shaft		Housing														Housing
		Dimensions													Mass	Designation
d	d_2	h	h_1	g	b	c	a	m	v	u	s		D	g_3	m	➤*1580|2.10*
											mm	inch			≈ kg	
40	50	60	112	85	60	25	205	170	20	15	M12	1/2	80	10,5	2,9	**SNV080-F-L**
	50	60	117	100	60	25	205	170	20	15	M12	1/2	90	12,5	3,1	**SNV090-F-L**
	50	60	112	85	60	25	205	170	20	15	M12	1/2	80	10,5	2,9	**SNV080-F-L**
	50	60	117	100	60	25	205	170	20	15	M12	1/2	90	12,5	3,1	**SNV090-F-L**
	50	60	112	85	60	25	205	170	20	15	M12	1/2	80	10,5	2,9	**SNV080-F-L**
	50	60	117	100	60	25	205	170	20	15	M12	1/2	90	12,5	3,1	**SNV090-F-L**
	50	60	117	100	60	25	205	170	20	15	M12	1/2	90	12,5	3,1	**SNV090-F-L**
	50	60	112	85	60	25	205	170	20	15	M12	1/2	80	10,5	2,9	**SNV080-F-L**
	50	60	117	100	60	25	205	170	20	15	M12	1/2	90	12,5	3,1	**SNV090-F-L**
45	55	60	114	87	60	25	205	170	20	15	M12	1/2	85	12,5	2,8	**SNV085-F-L**
	55	70	133	105	70	28	255	210	23	18	M16	5/8	100	12,5	4,3	**SNV100-F-L**
	55	60	114	87	60	25	205	170	20	15	M12	1/2	85	12,5	2,8	**SNV085-F-L**
	55	70	133	105	70	28	255	210	23	18	M16	5/8	100	12,5	4,3	**SNV100-F-L**
	55	60	114	87	60	25	205	170	20	15	M12	1/2	85	12,5	2,8	**SNV085-F-L**
	55	70	133	105	70	28	255	210	23	18	M16	5/8	100	12,5	4,3	**SNV100-F-L**
	55	70	133	105	70	28	255	210	23	18	M16	5/8	100	12,5	4,3	**SNV100-F-L**
	55	60	114	87	60	25	205	170	20	15	M12	1/2	85	12,5	2,8	**SNV085-F-L**
	55	70	133	105	70	28	255	210	23	18	M16	5/8	100	12,5	4,3	**SNV100-F-L**
50	60	60	117	100	60	25	205	170	20	15	M12	1/2	90	12,5	3,1	**SNV090-F-L**
	60	70	139	110	70	30	255	210	23	18	M16	5/8	110	12,5	4,9	**SNV110-F-L**
	60	60	117	100	60	25	205	170	20	15	M12	1/2	90	12,5	3,1	**SNV090-F-L**
	60	70	139	110	70	30	255	210	23	18	M16	5/8	110	12,5	4,9	**SNV110-F-L**
	60	60	117	100	60	25	205	170	20	15	M12	1/2	90	12,5	3,1	**SNV090-F-L**
	60	70	139	110	70	30	255	210	23	18	M16	5/8	110	12,5	4,9	**SNV110-F-L**
	60	70	139	110	70	30	255	210	23	18	M16	5/8	110	12,5	4,9	**SNV110-F-L**
	60	60	117	100	60	25	205	170	20	15	M12	1/2	90	12,5	3,1	**SNV090-F-L**
	60	70	139	110	70	30	255	210	23	18	M16	5/8	110	12,5	4,9	**SNV110-F-L**

medias *https://www.schaeffler.de/std/1F9A*

① Locating bearing; ② Non-locating bearing

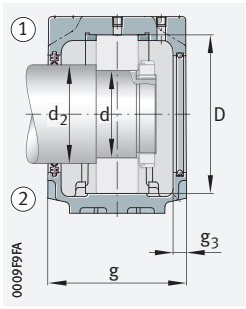

Double lip seal DH
Cover DKVT

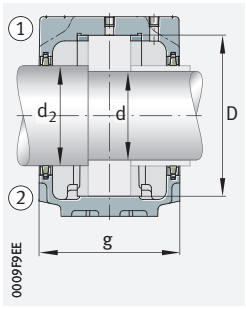

Felt seal FSV

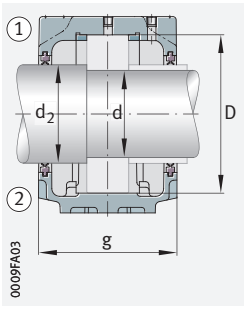

Double lip seal DH

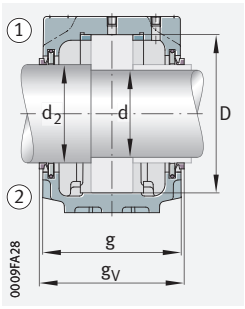

V ring seal DHV

Bearings and accessories

Bearing	Lock-nut	Tab washer	Locating ring 2 pieces	Double lip seal	Felt seal	Labyrinth seal		V ring seal		Taconite seal		Cover
							g_L mm		g_V mm		g_T mm	
1208	KM8	MB8	FRM80/10,5	DH208	FSV208	TSV208	98	DHV208	93	–	–	DKV080
1308	KM8	MB8	FRM90/9	DH308	FSV308	TSV308	114	DHV308	106	–	–	DKV090
2208	KM8	MB8	FRM80/8	DH208	FSV208	TSV208	98	DHV208	93	–	–	DKV080
2308	KM8	MB8	FRM90/4	DH308	FSV308	TSV308	114	DHV308	106	–	–	DKV090
20208	KM8	MB8	FRM80/10,5	DH208	FSV208	TSV208	98	DHV208	93	–	–	DKV080
20308	KM8	MB8	FRM90/9	DH308	FSV308	TSV308	114	DHV308	106	–	–	DKV090
21308	KM8	MB8	FRM90/9	DH308	FSV308	TSV308	114	DHV308	106	–	–	DKV090
22208	KM8	MB8	FRM80/8	DH208	FSV208	TSV208	98	DHV208	93	–	–	DKV080
22308	KM8	MB8	FRM90/4	DH308	FSV308	TSV308	114	DHV308	106	–	–	DKV090
1209	KM9	MB9	FRM85/6	DH209	FSV209	TSV209	101	DHV209	93	–	–	DKV085
1309	KM9	MB9	FRM100/9,5	DH309	FSV309	TSV309	119	DHV309	111	–	–	DKV100
2209	KM9	MB9	FRM85/4	DH209	FSV209	TSV209	101	DHV209	93	–	–	DKV085
2309	KM9	MB9	FRM100/4	DH309	FSV309	TSV309	119	DHV309	111	–	–	DKV100
20209	KM9	MB9	FRM85/6	DH209	FSV209	TSV209	101	DHV209	93	–	–	DKV085
20309	KM9	MB9	FRM100/9,5	DH309	FSV309	TSV309	119	DHV309	111	–	–	DKV100
21309	KM9	MB9	FRM100/9,5	DH309	FSV309	TSV309	119	DHV309	111	–	–	DKV100
22209	KM9	MB9	FRM85/4	DH209	FSV209	TSV209	101	DHV209	93	–	–	DKV085
22309	KM9	MB9	FRM100/4	DH309	FSV309	TSV309	119	DHV309	111	–	–	DKV100
1210	KM10	MB10	FRM90/10,5	DH210	FSV210	TSV210	114	DHV210	106	–	–	DKV090
1310	KM10	MB10	FRM110/10,5	DH310	FSV310	TSV310	124	DHV310	116	–	–	DKV110
2210	KM10	MB10	FRM90/9	DH210	FSV210	TSV210	114	DHV210	106	–	–	DKV090
2310	KM10	MB10	FRM110/4	DH310	FSV310	TSV310	124	DHV310	116	–	–	DKV110
20210	KM10	MB10	FRM90/10,5	DH210	FSV210	TSV210	114	DHV210	106	–	–	DKV090
20310	KM10	MB10	FRM110/10,5	DH310	FSV310	TSV310	124	DHV310	116	–	–	DKV110
21310	KM10	MB10	FRM110/10,5	DH310	FSV310	TSV310	124	DHV310	116	–	–	DKV110
22210	KM10	MB10	FRM90/9	DH210	FSV210	TSV210	114	DHV210	106	–	–	DKV090
22310	KM10	MB10	FRM110/4	DH310	FSV310	TSV310	124	DHV310	116	–	–	DKV110

Plummer block housings

SNV, split
For bearings
with cylindrical bore,
metric shaft

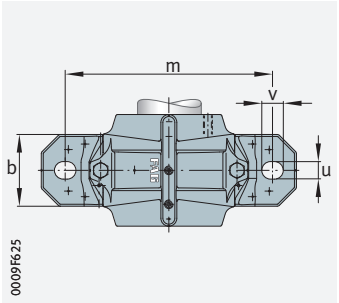

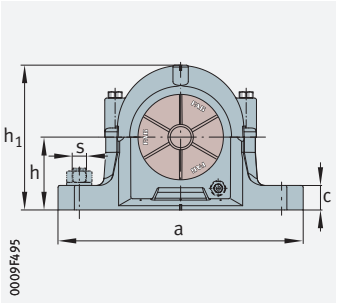

d = 55 – 65 mm

Shaft		Housing														Housing
		Dimensions													Mass	Designation
																➤*1580|2.10*
d	d_2	h	h_1	g	b	c	a	m	v	u	s		D	g_3	m	
											mm	inch			≈ kg	
55	65	70	133	105	70	28	255	210	23	18	M16	5/8	100	12,5	4,3	**SNV100-F-L**
	65	80	155	115	80	30	275	230	23	18	M16	5/8	120	12,5	6,1	**SNV120-F-L**
	65	70	133	105	70	28	255	210	23	18	M16	5/8	100	12,5	4,3	**SNV100-F-L**
	65	80	155	115	80	30	275	230	23	18	M16	5/8	120	12,5	6,1	**SNV120-F-L**
	65	70	133	105	70	28	255	210	23	18	M16	5/8	100	12,5	4,3	**SNV100-F-L**
	65	80	155	115	80	30	275	230	23	18	M16	5/8	120	12,5	6,1	**SNV120-F-L**
	65	80	155	115	80	30	275	230	23	18	M16	5/8	120	12,5	6,1	**SNV120-F-L**
	65	70	133	105	70	28	255	210	23	18	M16	5/8	100	12,5	4,3	**SNV100-F-L**
	65	80	155	115	80	30	275	230	23	18	M16	5/8	120	12,5	6,1	**SNV120-F-L**
60	70	70	139	110	70	30	255	210	23	18	M16	5/8	110	12,5	4,9	**SNV110-F-L**
	70	80	161	120	80	30	280	230	23	18	M16	5/8	130	12,5	6,8	**SNV130-F-L**
	70	70	139	110	70	30	255	210	23	18	M16	5/8	110	12,5	4,9	**SNV110-F-L**
	70	80	161	120	80	30	280	230	23	18	M16	5/8	130	12,5	6,8	**SNV130-F-L**
	70	70	139	110	70	30	255	210	23	18	M16	5/8	110	12,5	4,9	**SNV110-F-L**
	70	80	161	120	80	30	280	230	23	18	M16	5/8	130	12,5	6,8	**SNV130-F-L**
	70	80	161	120	80	30	280	230	23	18	M16	5/8	130	12,5	6,8	**SNV130-F-L**
	70	70	139	110	70	30	255	210	23	18	M16	5/8	110	12,5	4,9	**SNV110-F-L**
	70	80	161	120	80	30	280	230	23	18	M16	5/8	130	12,5	6,8	**SNV130-F-L**
65	75	80	155	115	80	30	275	230	23	18	M16	5/8	120	12,5	6,1	**SNV120-F-L**
	75	95	183	135	90	32	315	260	27	22	M20	3/4	140	15	9,3	**SNV140-F-L**
	75	80	155	115	80	30	275	230	23	18	M16	5/8	120	12,5	6,1	**SNV120-F-L**
	75	95	183	135	90	32	315	260	27	22	M20	3/4	140	15	9,3	**SNV140-F-L**
	75	80	155	115	80	30	275	230	23	18	M16	5/8	120	12,5	6,1	**SNV120-F-L**
	75	95	183	135	90	32	315	260	27	22	M20	3/4	140	15	9,3	**SNV140-F-L**
	75	95	183	135	90	32	315	260	27	22	M20	3/4	140	15	9,3	**SNV140-F-L**
	75	80	155	115	80	30	275	230	23	18	M16	5/8	120	12,5	6,1	**SNV120-F-L**
	75	95	183	135	90	32	315	260	27	22	M20	3/4	140	15	9,3	**SNV140-F-L**

medias *https://www.schaeffler.de/std/1F9A*

① Locating bearing; ② Non-locating bearing

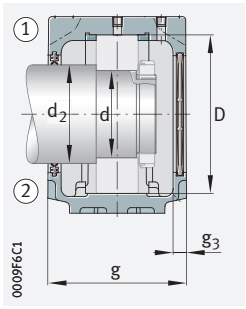

Double lip seal DH
Cover DKV

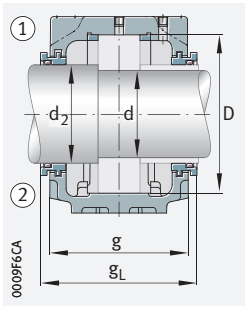

Labyrinth seal TSV

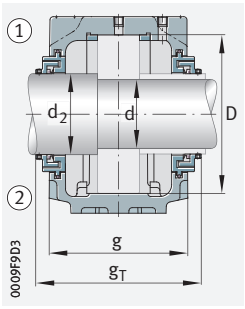

Taconite seal TCV

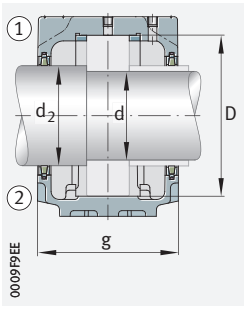

Felt seal FSV

Bearings and accessories

Bearing	Lock-nut	Tab washer	Locating ring 2 pieces	Double lip seal	Felt seal	Labyrinth seal		V ring seal		Taconite seal		Cover
							g_L mm		g_V mm		g_T mm	
1211	KM11	MB11	FRM100/11,5	DH211	FSV211	TSV211	119	DHV211	111	–	–	DKV100
1311	KM11	MB11	FRM120/11	DH311	FSV311	TSV311	129	DHV311	121	–	–	DKV120
2211	KM11	MB11	FRM100/9,5	DH211	FSV211	TSV211	119	DHV211	111	–	–	DKV100
2311	KM11	MB11	FRM120/4	DH311	FSV311	TSV311	129	DHV311	121	–	–	DKV120
20211	KM11	MB11	FRM100/11,5	DH211	FSV211	TSV211	119	DHV211	111	–	–	DKV100
20311	KM11	MB11	FRM120/11	DH311	FSV311	TSV311	129	DHV311	121	–	–	DKV120
21311	KM11	MB11	FRM120/11	DH311	FSV311	TSV311	129	DHV311	121	–	–	DKV120
22211	KM11	MB11	FRM100/9,5	DH211	FSV211	TSV211	119	DHV211	111	–	–	DKV100
22311	KM11	MB11	FRM120/4	DH311	FSV311	TSV311	129	DHV311	121	–	–	DKV120
1212	KM12	MB12	FRM110/13	DH212	FSV212	TSV212	124	DHV212	120	–	–	DKV110
1312	KM12	MB12	FRM130/12,5	DH312	FSV312	TSV312	134	DHV312	130	TCV312	158	DKV130
2212	KM12	MB12	FRM110/10	DH212	FSV212	TSV212	124	DHV212	120	–	–	DKV110
2312	KM12	MB12	FRM130/5	DH312	FSV312	TSV312	134	DHV312	130	TCV312	158	DKV130
20212	KM12	MB12	FRM110/13	DH212	FSV212	TSV212	124	DHV212	120	–	–	DKV110
20312	KM12	MB12	FRM130/12,5	DH312	FSV312	TSV312	134	DHV312	130	TCV312	158	DKV130
21312	KM12	MB12	FRM130/12,5	DH312	FSV312	TSV312	134	DHV312	130	TCV312	158	DKV130
22212	KM12	MB12	FRM110/10	DH212	FSV212	TSV212	124	DHV212	120	–	–	DKV110
22312	KM12	MB12	FRM130/5	DH312	FSV312	TSV312	134	DHV312	130	TCV312	158	DKV130
1213	KM13	MB13	FRM120/14	DH213	FSV213	TSV213	129	DHV213	125	–	–	DKV120
1313	KM13	MB13	FRM140/12,5	DH313	FSV313	TSV313	150,3	DHV313	142,5	TCV313	175,5	DKV140
2213	KM13	MB13	FRM120/10	DH213	FSV213	TSV213	129	DHV213	125	–	–	DKV120
2313	KM13	MB13	FRM140/5	DH313	FSV313	TSV313	150,3	DHV313	142,5	TCV313	175,5	DKV140
20213	KM13	MB13	FRM120/14	DH213	FSV213	TSV213	129	DHV213	125	–	–	DKV120
20313	KM13	MB13	FRM140/12,5	DH313	FSV313	TSV313	150,3	DHV313	142,5	TCV313	175,5	DKV140
21313	KM13	MB13	FRM140/12,5	DH313	FSV313	TSV313	150,3	DHV313	142,5	TCV313	175,5	DKV140
22213	KM13	MB13	FRM120/10	DH213	FSV213	TSV213	129	DHV213	125	–	–	DKV120
22313	KM13	MB13	FRM140/5	DH313	FSV313	TSV313	150,3	DHV313	142,5	TCV313	175,5	DKV140

Plummer block housings

SNV, split
For bearings
with cylindrical bore,
metric shaft

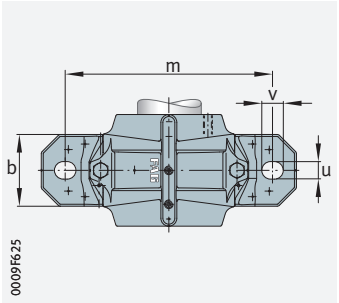

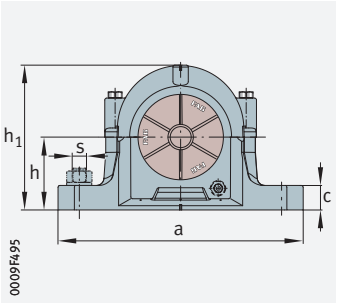

d = 70 – 80 mm

Shaft		Housing													Housing
		Dimensions												Mass	Designation
															➤*1580|2.10*
d	d_2	h	h_1	g	b	c	a	m	v	u	s		D	g_3	m
											mm	inch			≈ kg
70	80	80	158	105	80	30	275	230	23	18	M16	5/8	125	15	6,5	**SNV125-F-L**
	80	95	189	140	90	32	320	260	27	22	M20	3/4	150	15	9,9	**SNV150-F-L**
	80	80	158	105	80	30	275	230	23	18	M16	5/8	125	15	6,5	**SNV125-F-L**
	80	95	189	140	90	32	320	260	27	22	M20	3/4	150	15	9,9	**SNV150-F-L**
	80	80	158	105	80	30	275	230	23	18	M16	5/8	125	15	6,5	**SNV125-F-L**
	80	95	189	140	90	32	320	260	27	22	M20	3/4	150	15	9,9	**SNV150-F-L**
	80	95	189	140	90	32	320	260	27	22	M20	3/4	150	15	9,9	**SNV150-F-L**
	80	80	158	105	80	30	275	230	23	18	M16	5/8	125	15	6,5	**SNV125-F-L**
	80	95	189	140	90	32	320	260	27	22	M20	3/4	150	15	9,9	**SNV150-F-L**
75	85	80	161	120	80	30	280	230	23	18	M16	5/8	130	12,5	6,8	**SNV130-F-L**
	85	100	201	145	100	35	345	290	27	22	M20	3/4	160	15	12,8	**SNV160-F-L**
	85	80	161	120	80	30	280	230	23	18	M16	5/8	130	12,5	6,8	**SNV130-F-L**
	85	100	201	145	100	35	345	290	27	22	M20	3/4	160	15	12,8	**SNV160-F-L**
	85	80	161	120	80	30	280	230	23	18	M16	5/8	130	12,5	6,8	**SNV130-F-L**
	85	100	201	145	100	35	345	290	27	22	M20	3/4	160	15	12,8	**SNV160-F-L**
	85	100	201	145	100	35	345	290	27	22	M20	3/4	160	15	12,8	**SNV160-F-L**
	85	80	161	120	80	30	280	230	23	18	M16	5/8	130	12,5	6,8	**SNV130-F-L**
	85	100	201	145	100	35	345	290	27	22	M20	3/4	160	15	12,8	**SNV160-F-L**
80	90	95	183	135	90	32	315	260	27	22	M20	3/4	140	15	9,3	**SNV140-F-L**
	90	112	219	150	100	35	345	290	27	22	M20	3/4	170	16	14,4	**SNV170-F-L**
	90	95	183	135	90	32	315	260	27	22	M20	3/4	140	15	9,3	**SNV140-F-L**
	90	112	219	150	100	35	345	290	27	22	M20	3/4	170	16	14,4	**SNV170-F-L**
	90	95	183	135	90	32	315	260	27	22	M20	3/4	140	15	9,3	**SNV140-F-L**
	90	112	219	150	100	35	345	290	27	22	M20	3/4	170	16	14,4	**SNV170-F-L**
	90	112	219	150	100	35	345	290	27	22	M20	3/4	170	16	14,4	**SNV170-F-L**
	90	95	183	135	90	32	315	260	27	22	M20	3/4	140	15	9,3	**SNV140-F-L**
	90	112	219	150	100	35	345	290	27	22	M20	3/4	170	16	14,4	**SNV170-F-L**

medias *https://www.schaeffler.de/std/1F9A*

① Locating bearing; ② Non-locating bearing

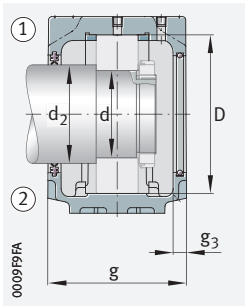

Double lip seal DH
Cover DKVT

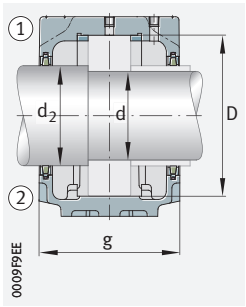

Felt seal FSV

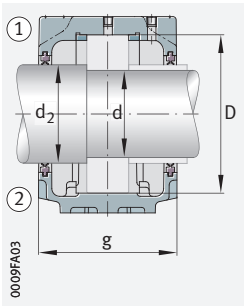

Double lip seal DH

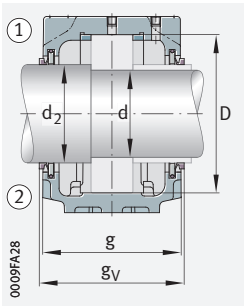

V ring seal DHV

Bearings and accessories

Bearing	Lock-nut	Tab washer	Locating ring 2 pieces	Double lip seal	Felt seal	Labyrinth seal		V ring seal		Taconite seal		Cover
							g_L mm		g_V mm		g_T mm	
1214	KM14	MB14	FRM125/7,5	DH214	FSV214	TSV214	120,3	DHV214	110	TCV214	143	DKV150
1314	KM14	MB14	FRM150/13	DH214	FSV214	TSV214	155,3	DHV214	147,5	TCV214	180,5	DKV150
2214	KM14	MB14	FRM125/4	DH214	FSV214	TSV214	120,3	DHV214	110	TCV214	143	DKV150
2314	KM14	MB14	FRM150/5	DH214	FSV214	TSV214	155,3	DHV214	147,5	TCV214	180,5	DKV150
20214	KM14	MB14	FRM125/7,5	DH214	FSV214	TSV214	120,3	DHV214	110	TCV214	143	DKV150
20314	KM14	MB14	FRM150/13	DH214	FSV214	TSV214	155,3	DHV214	147,5	TCV214	180,5	DKV150
21314	KM14	MB14	FRM150/13	DH214	FSV214	TSV214	155,3	DHV214	147,5	TCV214	180,5	DKV150
22214	KM14	MB14	FRM125/4	DH214	FSV214	TSV214	120,3	DHV214	110	TCV214	143	DKV150
22314	KM14	MB14	FRM150/5	DH214	FSV214	TSV214	155,3	DHV214	147,5	TCV214	180,5	DKV150
1215	KM15	MB15	FRM130/15,5	DH215	FSV215	TSV215	134	DHV215	130	–	–	DKV130
1315	KM15	MB15	FRM160/14	DH315	FSV315	TSV315	160,3	DHV315	152,5	TCV315	185,5	DKV160
2215	KM15	MB15	FRM130/12,5	DH215	FSV215	TSV215	134	DHV215	130	–	–	DKV130
2315	KM15	MB15	FRM160/5	DH315	FSV315	TSV315	160,3	DHV315	152,5	TCV315	185,5	DKV160
20215	KM15	MB15	FRM130/15,5	DH215	FSV215	TSV215	134	DHV215	130	–	–	DKV130
20315	KM15	MB15	FRM160/14	DH315	FSV315	TSV315	160,3	DHV315	152,5	TCV315	185,5	DKV160
21315	KM15	MB15	FRM160/14	DH315	FSV315	TSV315	160,3	DHV315	152,5	TCV315	185,5	DKV160
22215	KM15	MB15	FRM130/12,5	DH215	FSV215	TSV215	134	DHV215	130	–	–	DKV130
22315	KM15	MB15	FRM160/5	DH315	FSV315	TSV315	160,3	DHV315	152,5	TCV315	185,5	DKV160
1216	KM16	MB16	FRM140/16	DH216	FSV216	TSV216	150,3	DHV216	142,5	–	–	DKV140
1316	KM16	MB16	FRM170/14,5	DH316	FSV316	TSV316	167,3	DHV316	157,5	TCV316	192,5	DKV170
2216	KM16	MB16	FRM140/12,5	DH216	FSV216	TSV216	150,3	DHV216	142,5	–	–	DKV140
2316	KM16	MB16	FRM170/5	DH316	FSV316	TSV316	167,3	DHV316	157,5	TCV316	192,5	DKV170
20216	KM16	MB16	FRM140/16	DH216	FSV216	TSV216	150,3	DHV216	142,5	–	–	DKV140
20316	KM16	MB16	FRM170/14,5	DH316	FSV316	TSV316	167,3	DHV316	157,5	TCV316	192,5	DKV170
21316	KM16	MB16	FRM170/14,5	DH316	FSV316	TSV316	167,3	DHV316	157,5	TCV316	192,5	DKV170
22216	KM16	MB16	FRM140/12,5	DH216	FSV216	TSV216	150,3	DHV216	142,5	–	–	DKV140
22316	KM16	MB16	FRM170/5	DH316	FSV316	TSV316	167,3	DHV316	157,5	TCV316	192,5	DKV170

Plummer block housings

SNV, split
For bearings
with cylindrical bore,
metric shaft

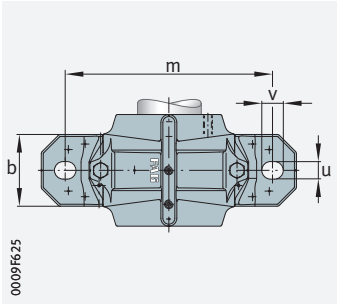

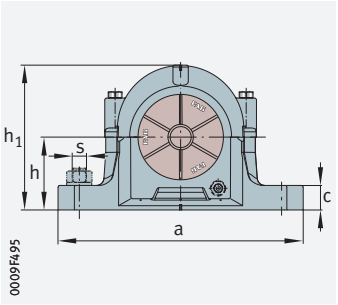

d = 85 – 95 mm

Shaft		Housing													Housing
		Dimensions												Mass	Designation
															➤*1580|2.10*
d	d_2	h	h_1	g	b	c	a	m	v	u	s		D	g_3	m
											mm	inch			≈ kg
85	95	95	189	140	90	32	320	260	27	22	M20	3/4	150	15	9,9	**SNV150-F-L**
	95	112	223	160	110	40	380	320	32	26	M24	7/8	180	16	17	**SNV180-F-L**
	95	95	189	140	90	32	320	260	27	22	M20	3/4	150	15	9,9	**SNV150-F-L**
	95	112	223	160	110	40	380	320	32	26	M24	7/8	180	16	17	**SNV180-F-L**
	95	95	189	140	90	32	320	260	27	22	M20	3/4	150	15	9,9	**SNV150-F-L**
	95	112	223	160	110	40	380	320	32	26	M24	7/8	180	16	17	**SNV180-F-L**
	95	112	223	160	110	40	380	320	32	26	M24	7/8	180	16	17	**SNV180-F-L**
	95	95	189	140	90	32	320	260	27	22	M20	3/4	150	15	9,9	**SNV150-F-L**
	95	112	223	160	110	40	380	320	32	26	M24	7/8	180	16	17	**SNV180-F-L**
90	100	100	201	145	100	35	345	290	27	22	M20	3/4	160	15	12,8	**SNV160-F-L**
	105	112	229	155	110	40	380	320	32	26	M24	7/8	190	15	22	**SNV190-F-L**
	100	100	201	145	100	35	345	290	27	22	M20	3/4	160	15	12,8	**SNV160-F-L**
	105	112	229	155	110	40	380	320	32	26	M24	7/8	190	15	22	**SNV190-F-L**
	100	100	201	145	100	35	345	290	27	22	M20	3/4	160	15	12,8	**SNV160-F-L**
	105	112	229	155	110	40	380	320	32	26	M24	7/8	190	15	22	**SNV190-F-L**
	105	112	229	155	110	40	380	320	32	26	M24	7/8	190	15	22	**SNV190-F-L**
	100	100	201	145	100	35	345	290	27	22	M20	3/4	160	15	12,8	**SNV160-F-L**
	105	112	229	155	110	40	380	320	32	26	M24	7/8	190	15	22	**SNV190-F-L**
	100	100	201	145	100	35	345	290	27	22	M20	3/4	160	15	12,8	**SNV160-F-L**
95	110	112	219	150	100	35	345	290	27	22	M20	3/4	170	16	14,4	**SNV170-F-L**
	110	125	248	175	120	45	410	350	32	26	M24	7/8	200	16	21	**SNV200-F-L**
	110	112	219	150	100	35	345	290	27	22	M20	3/4	170	16	14,4	**SNV170-F-L**
	110	125	248	175	120	45	410	350	32	26	M24	7/8	200	16	21	**SNV200-F-L**
	110	112	219	150	100	35	345	290	27	22	M20	3/4	170	16	14,4	**SNV170-F-L**
	110	125	248	175	120	45	410	350	32	26	M24	7/8	200	16	21	**SNV200-F-L**
	110	125	248	175	120	45	410	350	32	26	M24	7/8	200	16	21	**SNV200-F-L**
	110	112	219	150	100	35	345	290	27	22	M20	3/4	170	16	14,4	**SNV170-F-L**
	110	125	248	175	120	45	410	350	32	26	M24	7/8	200	16	21	**SNV200-F-L**

medias *https://www.schaeffler.de/std/1F9A*

① Locating bearing; ② Non-locating bearing

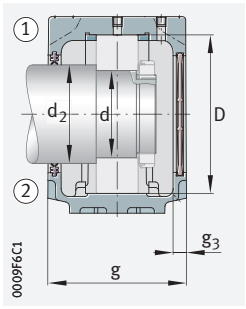

Double lip seal DH
Cover DKV

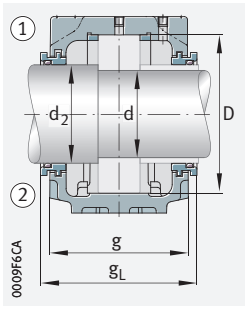

Labyrinth seal TSV

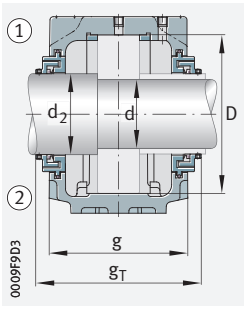

Taconite seal TCV

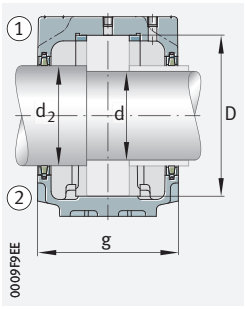

Felt seal FSV

Bearings and accessories

Bearing	Lock-nut	Tab washer	Locating ring 2 pieces	Double lip seal	Felt seal	Labyrinth seal		V ring seal		Taconite seal		Cover
							g_L mm		g_V mm		g_T mm	
1217	KM17	MB17	FRM150/16,5	DH217	FSV217	TSV217	155,3	DHV217	137,5	–	–	DKV150
1317	KM17	MB17	FRM180/14,5	DH317	FSV317	TSV317	177,3	DHV317	167,5	TCV317	202,5	DKV180
2217	KM17	MB17	FRM150/12,5	DH217	FSV217	TSV217	155,3	DHV217	137,5	–	–	DKV150
2317	KM17	MB17	FRM180/5	DH317	FSV317	TSV317	177,3	DHV317	167,5	TCV317	202,5	DKV180
20217	KM17	MB17	FRM150/16,5	DH217	FSV217	TSV217	155,3	DHV217	137,5	–	–	DKV150
20317	KM17	MB17	FRM180/14,5	DH317	FSV317	TSV317	177,3	DHV317	167,5	TCV317	202,5	DKV180
21317	KM17	MB17	FRM180/14,5	DH317	FSV317	TSV317	177,3	DHV317	167,5	TCV317	202,5	DKV180
22217	KM17	MB17	FRM150/12,5	DH217	FSV217	TSV217	155,3	DHV217	137,5	–	–	DKV150
22317	KM17	MB17	FRM180/5	DH317	FSV317	TSV317	177,3	DHV317	167,5	TCV317	202,5	DKV180
1218	KM18	MB18	FRM160/17,5	DH218	FSV218	TSV218	160,3	DHV218	152,5	–	–	DKV160
1318	KM18	MB18	FRM190/15,5	DH318	FSV318	TSV318	170,3	DHV318	162,5	–	–	DKV160
2218	KM18	MB18	FRM160/12,5	DH218	FSV218	TSV218	160,3	DHV218	152,5	–	–	DKV160
2318	KM18	MB18	FRM190/5	DH318	FSV318	TSV318	170,3	DHV318	162,5	–	–	DKV160
20218	KM18	MB18	FRM160/17,5	DH218	FSV218	TSV218	160,3	DHV218	152,5	–	–	DKV160
20318	KM18	MB18	FRM190/15,5	DH318	FSV318	TSV318	170,3	DHV318	162,5	–	–	DKV160
21318	KM18	MB18	FRM190/15,5	DH318	FSV318	TSV318	170,3	DHV318	162,5	–	–	DKV160
22218	KM18	MB18	FRM160/12,5	DH218	FSV218	TSV218	160,3	DHV218	152,5	–	–	DKV160
22318	KM18	MB18	FRM190/5	DH318	FSV318	TSV318	170,3	DHV318	162,5	–	–	DKV160
23218	KM18	MB18	FRM160/6,3	DH218	FSV218	TSV218	160,3	DHV218	152,5	–	–	DKV160
1219	KM19	MB19	FRM170/18	DH219	FSV219	TSV219	167,3	DHV219	160,5	–	–	DKV170
1319	KM19	MB19	FRM200/17,5	DH319	FSV319	TSV319	192,3	DHV319	185,5	TCV319	217,5	DKV200
2219	KM19	MB19	FRM170/12,5	DH219	FSV219	TSV219	167,3	DHV219	160,5	–	–	DKV170
2319	KM19	MB19	FRM200/6,5	DH319	FSV319	TSV319	192,3	DHV319	185,5	TCV319	217,5	DKV200
20219	KM19	MB19	FRM170/18	DH219	FSV219	TSV219	167,3	DHV219	160,5	–	–	DKV170
20319	KM19	MB19	FRM200/17,5	DH319	FSV319	TSV319	192,3	DHV319	185,5	TCV319	217,5	DKV200
21319	KM19	MB19	FRM200/17,5	DH319	FSV319	TSV319	192,3	DHV319	185,5	TCV319	217,5	DKV200
22219	KM19	MB19	FRM170/12,5	DH219	FSV219	TSV219	167,3	DHV219	160,5	–	–	DKV170
22319	KM19	MB19	FRM200/6,5	DH319	FSV319	TSV319	192,3	DHV319	185,5	TCV319	217,5	DKV200

Plummer block housings

SNV, split
For bearings
with cylindrical bore,
metric shaft

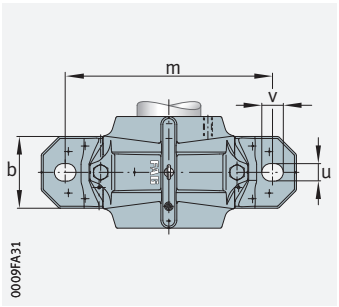

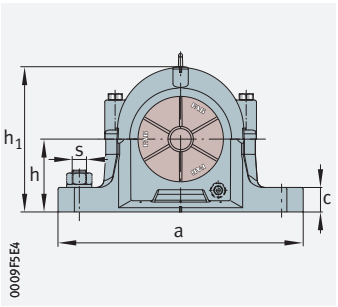

d = 100 – 120 mm

Shaft		Housing													Housing
		Dimensions												Mass	Designation
															➤*1580|2.10*
d	d_2	h	h_1	g	b	c	a	m	v	u	s		D	g_3	m
											mm	inch			≈ kg
100	115	112	223	160	110	40	380	320	32	26	M24	7/8	180	16	17	**SNV180-F-L**[1]
	115	140	271	180	120	45	410	350	32	26	M24	7/8	215	16	24,5	**SNV215-F-L**
	115	112	223	160	110	40	380	320	32	26	M24	7/8	180	16	17	**SNV180-F-L**[1]
	115	140	271	180	120	45	410	350	32	26	M24	7/8	215	16	24,5	**SNV215-F-L**
	115	112	223	160	110	40	380	320	32	26	M24	7/8	180	16	17	**SNV180-F-L**[1]
	115	140	271	180	120	45	410	350	32	26	M24	7/8	215	16	24,5	**SNV215-F-L**
	115	140	271	180	120	45	410	350	32	26	M24	7/8	215	16	24,5	**SNV215-F-L**
	115	112	223	160	110	40	380	320	32	26	M24	7/8	180	16	17	**SNV180-F-L**[1]
	115	140	271	180	120	45	410	350	32	26	M24	7/8	215	16	24,5	**SNV215-F-L**
	115	112	223	160	110	40	380	320	32	26	M24	7/8	180	16	17	**SNV180-F-L**[1]
110	125	125	248	175	120	45	410	350	32	26	M24	7/8	200	16	21	**SNV200-F-L**[1]
	125	150	298	185	130	50	450	390	35	28	M24	1	240	18	32	**SNV240-F-L**
	125	125	248	175	120	45	410	350	32	26	M24	7/8	200	16	21	**SNV200-F-L**[1]
	125	150	298	185	130	50	450	390	35	28	M24	1	240	18	32	**SNV240-F-L**
	125	125	248	175	120	45	410	350	32	26	M24	7/8	200	16	21	**SNV200-F-L**[1]
	125	150	298	185	130	50	450	390	35	28	M24	1	240	18	32	**SNV240-F-L**
	125	150	298	185	130	50	450	390	35	28	M24	1	240	18	32	**SNV240-F-L**
	125	125	248	175	120	45	410	350	32	26	M24	7/8	200	16	21	**SNV200-F-L**[1]
	125	150	298	185	130	50	450	390	35	28	M24	1	240	18	32	**SNV240-F-L**
	125	125	248	175	120	45	410	350	32	26	M24	7/8	200	16	21	**SNV200-F-L**[1]
120	135	140	271	180	120	45	410	350	32	26	M24	7/8	215	16	24,5	**SNV215-F-L**
	135	160	321	190	160	60	530	450	42	35	M30	1 1/4	260	18	48	**SNV260-F-L**
	135	140	271	180	120	45	410	350	32	26	M24	7/8	215	16	24,5	**SNV215-F-L**
	135	160	321	190	160	60	530	450	42	35	M30	1 1/4	260	18	48	**SNV260-F-L**
	135	140	271	180	120	45	410	350	32	26	M24	7/8	215	16	24,5	**SNV215-F-L**

medias *https://www.schaeffler.de/std/1F9A*

① Locating bearing; ② Non-locating bearing

1) Housing without eye bolt.

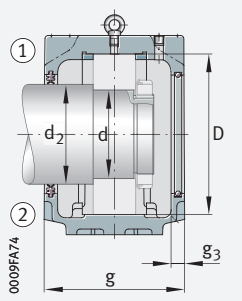

Double lip seal DH
Cover DKVT

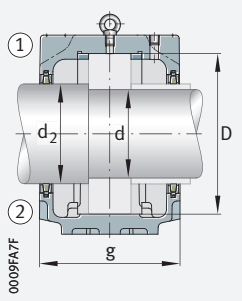

Felt seal FSV

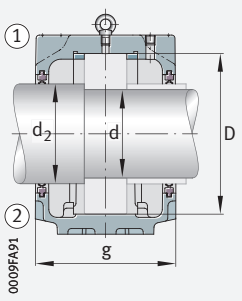

Double lip seal DH

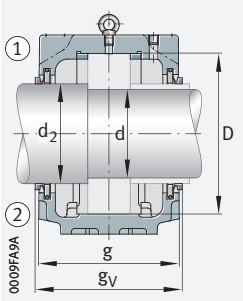

V ring seal DHV

Bearings and accessories

Bearing	Lock-nut	Tab washer	Locating ring 2 pieces	Double lip seal	Felt seal	Labyrinth seal		V ring seal		Taconite seal		Cover
							g_L mm		g_V mm		g_T mm	
1220	KM20	MB20	FRM180/18	DH220	FSV220	TSV220	177,3	DHV220	170,5	–	–	DKV180
1320	KM20	MB20	FRM215/19,5	DH320	FSV320	TSV320	197,3	DHV320	190,5	TCV320	226,5	DKV215
2220	KM20	MB20	FRM180/12	DH220	FSV220	TSV220	177,3	DHV220	170,5	–	–	DKV180
2320	KM20	MB20	FRM215/6,5	DH320	FSV320	TSV320	197,3	DHV320	190,5	TCV320	226,5	DKV215
20220	KM20	MB20	FRM180/18	DH220	FSV220	TSV220	177,3	DHV220	170,5	–	–	DKV180
20320	KM20	MB20	FRM215/19,5	DH320	FSV320	TSV320	197,3	DHV320	190,5	TCV320	226,5	DKV215
21320	KM20	MB20	FRM215/19,5	DH320	FSV320	TSV320	197,3	DHV320	190,5	TCV320	226,5	DKV215
22220	KM20	MB20	FRM180/12	DH220	FSV220	TSV220	177,3	DHV220	170,5	–	–	DKV180
22320	KM20	MB20	FRM215/6,5	DH320	FSV320	TSV320	197,3	DHV320	190,5	TCV320	226,5	DKV215
23220	KM20	MB20	FRM180/4,85	DH220	FSV220	TSV220	177,3	DHV220	170,5	–	–	DKV180
1222	KM22	MB22	FRM200/21	DH222	FSV222	TSV222	195,3	DHV222	185,5	–	–	DKV200
1322	KM22	MB22	FRM240/20	DH222	FSV222	TSV222	203,3	DHV222	193,5	–	–	DKV200
2222	KM22	MB22	FRM200/13,5	DH222	FSV222	TSV222	195,3	DHV222	185,5	–	–	DKV200
2322	KM22	MB22	FRM240/5	DH222	FSV222	TSV222	203,3	DHV222	193,5	–	–	DKV200
20222	KM22	MB22	FRM200/21	DH222	FSV222	TSV222	195,3	DHV222	185,5	–	–	DKV200
20322	KM22	MB22	FRM240/20	DH222	FSV222	TSV222	203,3	DHV222	193,5	–	–	DKV200
21322	KM22	MB22	FRM240/20	DH222	FSV222	TSV222	203,3	DHV222	193,5	–	–	DKV200
22222	KM22	MB22	FRM200/13,5	DH222	FSV222	TSV222	195,3	DHV222	185,5	–	–	DKV200
22322	KM22	MB22	FRM240/5	DH222	FSV222	TSV222	203,3	DHV222	193,5	–	–	DKV200
23222	KM22	MB22	FRM200/5,1	DH222	FSV222	TSV222	195,3	DHV222	185,5	–	–	DKV200
20224	KM24	MB24	FRM215/23	DH224	FSV224	TSV224	200,3	DHV224	190,5	–	–	DKV215
20324	KM24	MB24	FRM260/20,5	DH224	FSV224	TSV224	208,3	DHV224	198,5	–	–	DKV215
22224	KM24	MB24	FRM215/14	DH224	FSV224	TSV224	200,3	DHV224	190,5	–	–	DKV215
22324	KM24	MB24	FRM260/5	DH224	FSV224	TSV224	208,3	DHV224	198,5	–	–	DKV215
23224	KM24	MB24	FRM215/5	DH224	FSV224	TSV224	200,3	DHV224	190,5	–	–	DKV215

Plummer block housings

SNV, split
For bearings
with cylindrical bore,
metric shaft

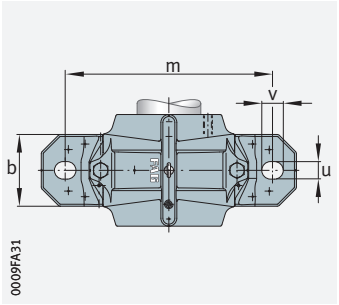

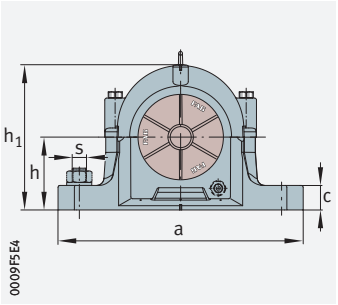

d = 130 – 160 mm

Shaft		Housing													Housing
		Dimensions												Mass	Designation
d	d_2	h	h_1	g	b	c	a	m	v	u	s	D	g_3	m	➤*1580|2.10*
											mm / inch			≈ kg	
130	145	150	291	190	130	50	445	380	35	28	M24 / 1	230	18	30	**SNV230-F-L**
	150	170	344	205	160	60	550	470	42	35	M30 / $1^1/_4$	280	18	55	**SNV280-F-L**
	145	150	291	190	130	50	445	380	35	28	M24 / 1	230	18	30	**SNV230-F-L**
	150	170	344	205	160	60	550	470	42	35	M30 / $1^1/_4$	280	18	55	**SNV280-F-L**
	145	150	291	190	130	50	445	380	35	28	M24 / 1	230	18	30	**SNV230-F-L**
140	155	150	304	200	150	50	500	420	42	35	M30 / $1^1/_4$	250	18	38	**SNV250-F-L**
	160	180	366	215	170	65	620	520	42	35	M30 / $1^1/_4$	300	18	70	**SNV300-F-L**
	155	150	304	200	150	50	500	420	42	35	M30 / $1^1/_4$	250	18	38	**SNV250-F-L**
	160	180	366	215	170	65	620	520	42	35	M30 / $1^1/_4$	300	18	70	**SNV300-F-L**
	155	150	304	200	150	50	500	420	42	35	M30 / $1^1/_4$	250	18	38	**SNV250-F-L**
150	165	160	328	215	160	60	530	450	42	35	M30 / $1^1/_4$	270	18	45,5	**SNV270-F-L**
	170	190	386	225	180	65	650	560	42	35	M30 / $1^1/_4$	320	18	95	**SNV320-F-L**
	165	160	328	215	160	60	530	450	42	35	M30 / $1^1/_4$	270	18	45,5	**SNV270-F-L**
	170	190	386	225	180	65	650	560	42	35	M30 / $1^1/_4$	320	18	95	**SNV320-F-L**
	165	160	328	215	160	60	530	450	42	35	M30 / $1^1/_4$	270	18	45,5	**SNV270-F-L**
160	175	170	351	225	160	60	550	470	42	35	M30 / $1^1/_4$	290	18	53,8	**SNV290-F-L**
	175	170	351	225	160	60	550	470	42	35	M30 / $1^1/_4$	290	18	53,8	**SNV290-F-L**
	180	200	406	235	190	70	680	580	50	42	M36 / $1^1/_2$	340	18	115	**SNV340-F-L**
	175	170	351	225	160	60	550	470	42	35	M30 / $1^1/_4$	290	18	53,8	**SNV290-F-L**

medias *https://www.schaeffler.de/std/1F9A*

① Locating bearing; ② Non-locating bearing

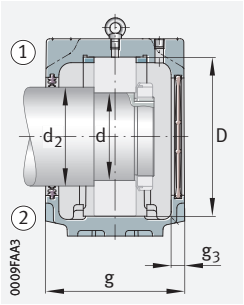

Double lip seal DH
Cover DKV

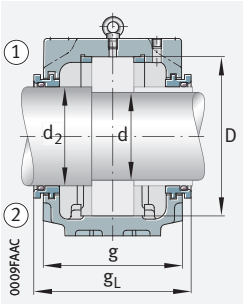

Labyrinth seal TSV

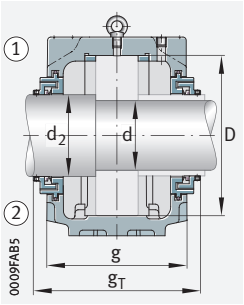

Taconite seal TCV

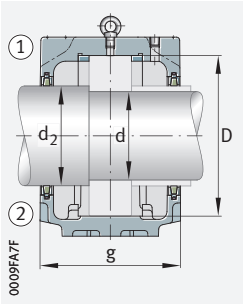

Felt seal FSV

Bearings and accessories

Bearing	Lock-nut	Tab washer	Locating ring 2 pieces	Double lip seal	Felt seal	Labyrinth seal		V ring seal		Taconite seal		Cover
							g_L mm		g_V mm		g_T mm	
20226	KM26	MB26	FRM230/25	DH226	FSV226	TSV226	208,3	DHV226	198,5	–	–	DKV230
20326	KM26	MB26	FRM280/22,5	DH326	FSV326	TSV326	223,3	DHV326	213,5	–	–	DKV230
22226	KM26	MB26	FRM230/13	DH226	FSV226	TSV226	208,3	DHV226	198,5	–	–	DKV230
22326	KM26	MB26	FRM280/5	DH326	FSV326	TSV326	223,3	DHV326	213,5	–	–	DKV230
23226	KM26	MB26	FRM230/5	DH226	FSV226	TSV226	208,3	DHV226	198,5	–	–	DKV230
20228	KM28	MB28	FRM250/28	DH228	FSV228	TSV228	218,3	DHV228	211,5	–	–	DKV250
20328	KM28	MB28	FRM300/25	DH328	FSV328	TSV328	233,3	DHV328	226,5	–	–	DKV250
22228	KM28	MB28	FRM250/15	DH228	FSV228	TSV228	218,3	DHV228	211,5	–	–	DKV250
22328	KM28	MB28	FRM300/5	DH328	FSV328	TSV328	233,3	DHV328	226,5	–	–	DKV250
23228	KM28	MB28	FRM250/5	DH228	FSV228	TSV228	218,3	DHV228	211,5	–	–	DKV250
20230	KM30	MB30	FRM270/30,5	DH230	FSV230	TSV230	233,3	DHV230	228,5	–	–	DKV270
20330	KM30	MB30	FRM320/26,5	DH330	FSV330	TSV330	243,3	DHV330	236,5	–	–	DKV270
22230	KM30	MB30	FRM270/16,5	DH230	FSV230	TSV230	233,3	DHV230	228,5	–	–	DKV270
22330	KM30	MB30	FRM320/5	DH330	FSV330	TSV330	243,3	DHV330	236,5	–	–	DKV270
23230	KM30	MB30	FRM270/5	DH230	FSV230	TSV230	233,3	DHV230	228,5	–	–	DKV270
20232	KM32	MB32	FRM290/33	DH232	FSV232	TSV232	243,3	DHV232	236,5	–	–	DKV290
22232	KM32	MB32	FRM290/17	DH232	FSV232	TSV232	243,3	DHV232	236,5	–	–	DKV290
22332	KM32	MB32	FRM340/5	DH332	FSV332	TSV332	253,3	DHV332	246,5	–	–	DKV290
23232	KM32	MB32	FRM290/5	DH232	FSV232	TSV232	243,3	DHV232	236,5	–	–	DKV290

3 Split plummer block housings SNS

Split plummer block housings SNS:

- are designed in accordance with a modular concept and are highly versatile in application ➤*1612|3.1*
- are suitable for different bearing types and sizes with bore diameters from 115 mm to 530 mm ➤*1615|3.2*
- lead, as a result of their design, to optimised load distribution and thereby increase the rating life of the bearing by up to 50% ➤*1612|1* and ➤*1612|3.1*
- give a reduction, due to the lower replacement frequency of the bearing fitted, in total costs over the running time

1
Influence of housing design on the load distribution in the bearing

① *Conventional plummer block housing with associated load distribution*
② *FAG plummer block housing SNS with associated load distribution*

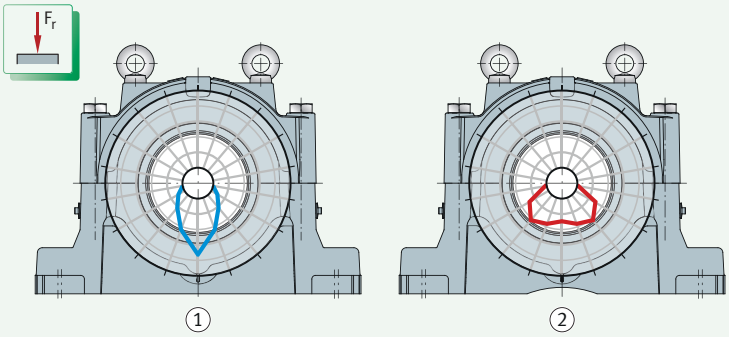

3.1 Housing design

✎ *Housings for aggressive environmental conditions*

Split plummer block housings SNS are highly robust and therefore particularly suitable for aggressive environmental conditions such as those in mining applications ➤*1612|2* and ➤*1613|3*.

2
Split plummer block housings SNS..-H and SNS..-Z

Housing design for labyrinth and taconite seal



3
Split plummer block housings SNS..-B

Housing design for Bolt-on seal

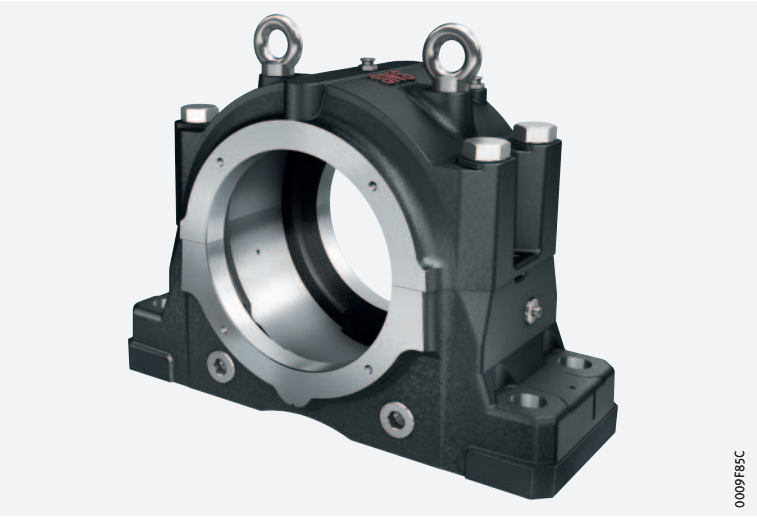

Modular concept

The decisive factor is the outside diameter of the bearing

The housings are designed in accordance with a modular concept. Each housing can be fitted with rolling bearings of various diameter and width series if they have the correct outside diameter for the housing.

Seals are matched to the shaft diameter

Depending on their design, the bearings can be located either directly on the shaft or by means of an adapter sleeve. This gives different shaft diameters for the same bearing size. The spacings between the shaft and housing body are compensated by means of appropriately matched seals.

Longer bearing life

Bearing rating life up to 50% longer than with conventional plummer block housings

In the case of plummer block housings SNS, the life of the spherical roller bearings fitted is up to 50% longer than in the case of conventional plummer block housings. The increase in life is dependent on the application, the load and the bearing design. Calculation of the bearing life is based on the calculation software BEARINX. The reason for the longer bearing life is the optimised load distribution in the bearing that is achieved as a result of the new housing design ➤*1612* 1.

Conventional plummer block housings: unfavourable load distribution in the bearing

Conventional plummer block housings are designed such that the bearing load is introduced into the housing locating face by means of a support area directly below the bearing. If loading is in the main load direction, namely with an orientation vertical to the housing locating face, an unfavourable load distribution occurs in the bearing. Due to the narrow load zone, the load is distributed over only a small number of rolling elements, leading to a particularly high load maximum on the roller in the apex position.

Plummer block housings SNS: optimised load distribution

In the case of plummer block housings SNS, a material recess below the bearing distributes the support area over two symmetrically arranged support faces. This leads to a significant improvement in the load distribution in the bearing. The load zone is wider and the load is distributed more uniformly over several rolling elements. The maximum is now present on the two neighbouring rollers of the roller in the apex position and is reduced. This results in a significant increase in the fatigue life of the rolling bearings.

Advantages of detailed design

A large number of details in the housing design that are systematically matched to practical application allows a particularly flexible and economical usage of plummer block housings SNS ➤ *1614* | *4*.

4
Advantages of detailed design

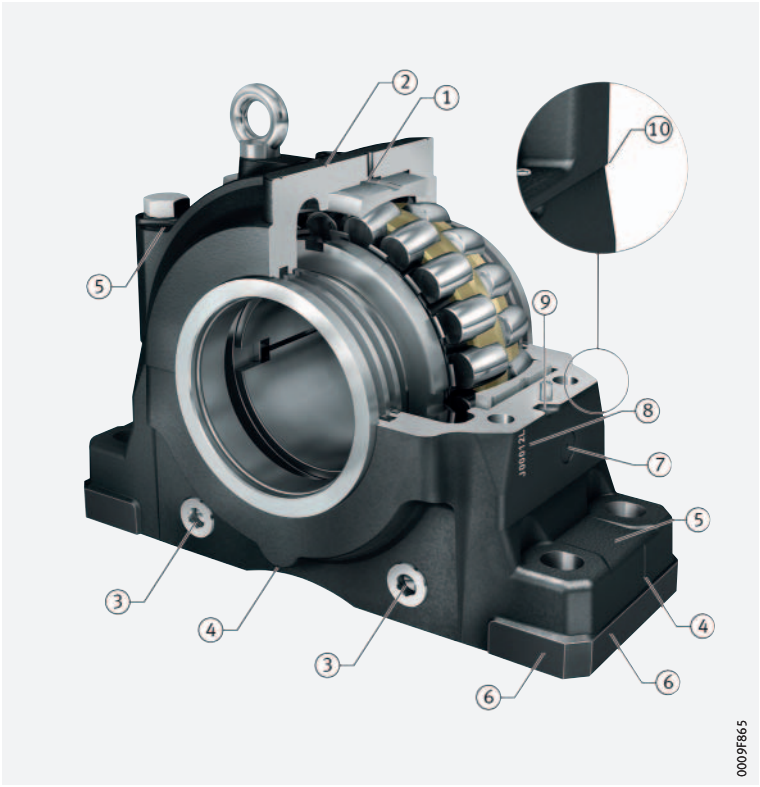

① *Lubrication hole with long axial lubrication groove*
② *Pilot hole at predefined position for condition monitoring*
③ *Grease outlet holes*
④ *Indentations indicating shaft and bearing centres*
⑤ *Inclined run-off areas*
⑥ *Machined locating faces*
⑦ *Prepared mounting points for condition monitoring*
⑧ *Marking of housing halves*
⑨ *Dismounting notches*
⑩ *Overhang of upper housing section*

✎ *Lubrication hole with long axial lubrication groove*

A lubrication hole with a long axial lubrication groove in the upper housing section ensures supply of lubricant irrespective of bearing position to all bearing series that can be fitted. Suitable lubrication nipples are included in the scope of delivery.

✎ *Grease outlet holes*

Grease outlet holes in the lower housing section allow the escape of used and superfluous grease during relubrication.

✎ *Indentations*

Indentations in the lower housing section indicate the shaft and bearing centres in the housing. This allows rapid alignment and reduces mounting time.

✎ *Inclined run-off areas*

Inclined run-off areas on the upper and lower housing section promote the removal of fluids and reduce deposits of contamination. This leads to reduced cleaning work and a lower risk of corrosion.

✎ *Machined locating faces*

Machined locating faces on the lower housing section allow precise alignment of the housing. When the housing is painted, the locating faces are also provided with a universal paint coating. Since the locating faces are raised, strips can be used as an alignment aid. One-off alignment is sufficient to allow rapid interchange of the housing when necessary.

✎ *Prepared mounting points for condition monitoring*

In order to allow the uncomplicated use of condition monitoring, the lower housing section has a connection facility on both sides for condition monitoring systems. Due to the thread M6 and a flattened area of diameter 26 mm, it is possible to directly connect FAG SmartCheck, a modular online measuring system for machine monitoring. Alternatively, other vibration sensors can also be connected.

If neither of the two connection points is accessible as a result of the adjacent construction, a further suitable connection point on the upper section is indicated by a cast-in pilot hole.

FAG SmartCheck must be ordered separately. Detailed information TPI 214 or *https://www.schaeffler.de/std/1B73*.

✎ *Marking of housing halves*

The upper housing section and lower housing section are matched to each other and must not be transposed with other housing halves. The serial numbering on both halves of the housing ensure their correction allocation. Furthermore, the serial numbering allows traceability and simplified documentation.

✎ *Dismounting notches*

Recessed dismounting notches on the interface of the housing halves make it easier to remove the upper housing section.

✎ *Overhang of upper housing section*

The overhang of the upper housing section prevents the collection of fluids and contaminants at the interface of the two housing halves. This leads to reduced cleaning work and a lower risk of corrosion.

3.2 Suitable bearings

✎ *Shaft diameters from 115 mm to 530 mm and from $4^{7}/_{16}$ inch to $19^{1}/_{2}$ inch*

Split plummer block housings SNS are intended for fitting with spherical roller bearings with a tapered or cylindrical bore ➤ *1615*| ▦ *1*. The range of shaft diameters is 115 mm to 530 mm and $4^{7}/_{16}$ inch to $19^{1}/_{2}$ inch.

▦ **1**
Bearing types and sizes

Bearing type	Size
Spherical roller bearings	
■ with tapered bore and adapter sleeve	22232..-K to 22272..-K
	22326..-K to 22356..-K
	23036-K to 230/530..-K
	23134..-K to 23196..-K
	23232..-K to 23288..-K
■ with cylindrical bore	22232 to 22272
	22326 to 22356
	23036 to 230/530
	23134 to 23196
	23232 to 23288
	24036 to 240/530
■ split	230SM160 to 230SM410
	230S.607 to 230S.1608
	231SM150 to 231SM410
	231S.515 to 231S.1500
	232SM260 to 232SM340
	232S.1200 to 232S.1308



Split spherical roller bearings

Unsplit spherical roller bearings with an adapter sleeve can be replaced by split spherical roller bearings ➤*1615*|▦ *1*. This gives a considerable reduction in the work associated with bearing replacement in numerous applications.

In order to ensure selection of the correct combination of housing and bearing when using split bearings, please contact Schaeffler.

The range of split spherical roller bearings is described in detail in a separate publication TPI 250.

Allocation of bearing and housing series

On the basis of the modular concept, one or more series of plummer block housings SNS are suitable for each series of spherical roller bearings ➤*1616*|▦ *2* to ➤*1616*|▦ *4*.

▦ **2**
Plummer block housings SNS for spherical roller bearings with tapered bore and adapter sleeve

● = *suitable*

Bearing	Plummer block housing										
Series	SNS2264		SNS30		SNS31			SNS32		SNS40	
	Suffixes										
	H	Z	H	Z	H	Z	B	H	Z	H	Z
222..-K	●	–	●	–	●	–	–	–	–	–	–
223..-K	–	–	●	–	●	–	–	–	–	–	–
230..-K	–	–	●	–	–	–	–	–	–	–	–
231..-K	–	–	–	–	●	–	●	–	–	–	–
232..-K	–	–	●	–	–	–	–	●	–	–	–

▦ **3**
Plummer block housings SNS for spherical roller bearings with cylindrical bore

● = *suitable*

Bearing	Plummer block housing										
Series	SNS2264		SNS30		SNS31			SNS32		SNS40	
	Suffixes										
	H	Z	H	Z	H	Z	B	H	Z	H	Z
222	–	●	●	–	●	●	–	–	–	–	–
223	–	–	●	–	●	–	–	–	–	–	–
230	–	–	●	●	–	–	–	–	–	–	–
231	–	–	–	–	●	●	–	–	–	–	–
232	–	–	●	–	–	–	–	–	●	–	–
240	–	–	●	●	–	–	–	–	–	–	●

▦ **4**
Plummer block housings SNS for split spherical roller bearings

● = *suitable*

Bearing	Plummer block housing										
Series	SNS2264		SNS30		SNS31			SNS32		SNS40	
	Suffixes										
	H	Z	H	Z	H	Z	B	H	Z	H	Z
230S	–	–	●	–	–	–	–	–	–	–	–
231S	–	–	–	–	●	–	●	–	–	–	–
232S	–	–	–	–	–	–	–	●	–	–	–

3.3 Materials, corrosion protection

Material

The housing bodies are made from spheroidal graphite cast iron GJS-400-15 (suffix D) as standard and alternatively from spheroidal graphite cast iron GJS-400-18C (suffix LT).

Corrosion protection

All outer surfaces not machined by chip-forming methods and the locating surfaces on the lower housing section have a universal paint coating (colour RAL 7016, anthracite grey). The coating can be finished using all synthetic resin, polyurethane, acrylic, epoxy resin, chlorinated rubber, nitrocellulose and acid-hardening hammer tone finishes.

Inner and outer surfaces machined by chip-forming methods are provided with anti-corrosion protection that can be easily removed.
It is recommended that only volatile solvents and lint-free cloths should be used.

3.4 Locating and non-locating bearings

Locating bearing arrangement by means of locating rings

The bearing seats in the housing are machined such that the bearings are movable and can thus function as non-locating bearings. Locating bearing arrangements can be achieved by the insertion of locating rings NFR on both sides of the bearing outer ring. Depending on the combination of housing and bearing, 2, 4 or 6 locating rings will be required ➤*1638*. Locating rings must be ordered separately.

3.5 Load carrying capacity

Guide values

Guide values are given for the rupture load of plummer block housings SNS and the maximum load carrying capacity of connecting screws for the upper and lower housing sections, ➤*1617*| 5 and ➤*1618*| 5. The guide values are valid for purely static loading.

The guide values only apply if the flatness of the mounting surface in accordance with DIN EN ISO 1101 corresponds to the tolerance grade IT7 in accordance with DIN EN ISO 286-1 (measured across the diagonal). A precondition for supporting loads is that the housing base surface is completely and rigidly supported.

Safety factors

When determining the permissible static load, safety factors must be applied. For general machine building, the safety factor 6 relative to the housing rupture load is normally applied. Based on the precise calculation of the housing rupture loads using the Finite Element method and the use, as standard, of spheroidal graphite cast iron as the housing material, the safety factor 5 is sufficient for plummer block housings SNS.

A safety factor is not required for the values given for the load carrying capacity of the connecting screws.

If the housing is subjected to axial load, the permissible axial load of the bearing fitted must be taken into consideration. If the bearing is located on the shaft using an adapter sleeve, the axial retaining force of the bearing and adapter sleeve must also be taken into consideration.

If the load direction is between 55° and 120° or axial load is present, we recommend that the housings should be secured in the load direction by means of stops.

5
Load directions F for the guide values for the housing rupture load and the maximum load carrying capacity of the connecting screws

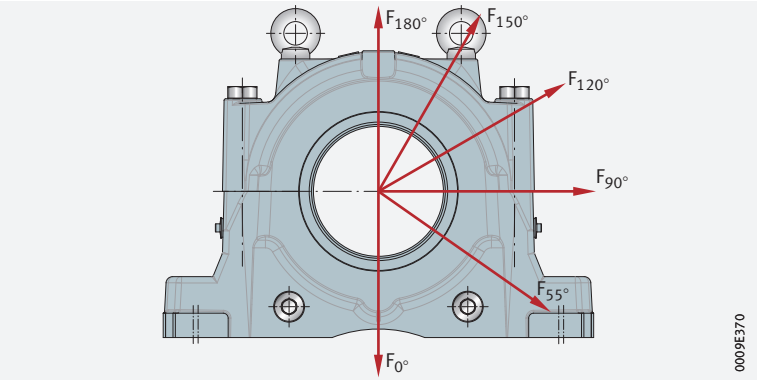

5

Guide values for housing rupture load and maximum load carrying capacity of connecting screws. Tightening torques

Housing designation					Housing rupture loads[1] in load direction F	
SNS22	SNS30	SNS31	SNS32	SNS40	0° kN	55° kN
–	SNS3036	SNS3134	–	–	4 050	4 540
–	SNS3038	SNS3136	–	–	4 400	4 940
–	SNS3040	SNS3138	SNS3234	–	4 880	5 480
–	–	–	SNS3236	–	4 880	5 480
–	SNS3044	SNS3140	SNS3238	–	5 800	6 500
–	SNS3048	SNS3144	SNS3240	–	6 240	7 560
–	SNS3052	SNS3148	–	–	7 330	8 550
–	–	–	SNS3244	–	7 330	8 550
–	SNS3056	SNS3152	–	–	8 740	9 810
–	–	–	SNS3248	–	8 740	9 810
–	SNS3060	SNS3156	–	–	9 200	10 320
–	SNS3064	SNS3160	–	–	10 150	11 390
–	–	–	SNS3252	–	10 150	11 390
–	–	–	SNS3256	–	10 150	11 390
–	SNS3068	SNS3164	–	–	11 410	12 810
–	SNS3072	–	–	–	11 410	12 810
–	–	–	SNS3260	–	11 410	12 810
SNS2264	SNS3076	SNS3168	–	SNS4076	13 300	14 930
–	–	–	SNS3264	–	13 300	14 930
–	SNS3080	SNS3172	–	–	14 740	16 540
–	–	–	–	SNS4080	14 740	16 540
–	SNS3084	SNS3176	–	–	15 940	17 890
–	–	–	SNS3268	–	15 940	17 890
–	–	–	–	SNS4084	15 940	17 890
–	SNS3088	SNS3180	–	–	18 490	20 750
–	–	–	SNS3272	–	18 490	20 750
–	–	–	–	SNS4088	18 490	20 750
–	SNS3092	SNS3184	–	SNS4092	20 180	22 650
–	SNS3096	–	–	SNS4096	20 180	22 650
–	–	–	SNS3276	–	20 180	22 650
–	SNS30/500	SNS3188	–	–	21 940	24 620
–	–	–	SNS3280	–	21 940	24 620
–	–	–	–	SNS40/500	21 940	24 620
–	–	SNS3192	–	–	24 150	27 100
–	–	–	SNS3284	–	24 150	27 100
–	SNS30/530	SNS3196	–	SNS40/530	26 080	29 270
–	–	–	SNS3288	–	26 080	29 270

1) *For housings made from spheroidal graphite cast iron GJS-400-15 (suffix D).*

2) *Maximum load carrying capacity in load direction F, where there is still contact at the parting line between the upper and lower housing sections.*

					Connecting screws					
					Screws to DIN EN ISO 4014	Tightening torque	Maximum load carrying capacity in load direction F[2)]			
90°	120°	150°	180°	axial	Grade 8.8		90°	120°	150°	180°
kN	kN	kN	kN	kN		Nm	kN	kN	kN	kN
3 040	1 650	1 190	1 220	1 170	M24	559	1 380	760	618	725
3 300	1 800	1 300	1 330	1 270	M24	559	1 370	760	615	723
3 660	1 990	1 440	1 470	1 410	M24	559	1 500	830	670	790
3 660	1 990	1 440	1 470	1 410	M24	559	1 500	830	670	790
4 350	2 370	1 700	1 750	1 670	M24	559	1 510	836	677	796
5 070	2 880	2 360	2 380	1 880	M24	559	1 484	820	664	781
5 720	3 190	2 470	2 510	2 080	M30	1 118	2 380	1 315	1 065	1 252
5 720	3 190	2 470	2 510	1 880	M30	1 118	2 380	1 315	1 065	1 252
6 550	3 570	2 580	2 640	2 520	M30	1 118	2 372	1 310	1 061	1 250
6 550	3 570	2 580	2 640	1 410	M30	1 118	2 372	1 310	1 061	1 250
6 900	3 760	2 710	2 780	2 652	M30	1 118	2 330	1 290	1 040	1 230
7 620	4 150	3 000	3 070	2 810	M30	1 118	2 220	1 230	990	1 170
7 620	4 150	3 000	3 070	2 230	M30	1 118	2 220	1 230	990	1 170
7 620	4 150	3 000	3 070	2 230	M30	1 118	2 220	1 230	990	1 170
8 560	4 660	3 370	3 450	3 355	M30	1 118	2 220	1 230	1 000	1 170
8 560	4 660	3 370	3 450	3 355	M30	1 118	2 200	1 230	1 000	1 170
8 560	4 660	3 370	3 450	2 900	M30	1 118	2 200	1 230	1 000	1 170
9 980	5 430	3 930	4 020	3 480	M36	1 945	3 260	1 800	1 460	1 720
9 980	5 430	3 930	4 020	2 690	M36	1 945	3 260	1 800	1 460	1 720
11 060	6 020	4 350	4 450	4 250	M36	1 945	3 100	1 710	1 390	1 630
11 060	6 020	4 350	4 450	4 295	M36	1 945	3 100	1 710	1 390	1 630
11 960	6 510	4 710	4 820	4 600	M36	1 945	3 100	1 710	1 390	1 630
11 960	6 510	4 710	4 820	3 628	M36	1 945	3 100	1 710	1 390	1 630
11 960	6 510	4 710	4 820	4 200	M36	1 945	3 100	1 710	1 390	1 630
13 870	7 560	5 460	5 590	5 330	M36	1 945	3 200	1 770	1 430	1 690
13 870	7 560	5 460	5 590	3 200	M36	1 945	3 200	1 770	1 430	1 690
13 870	7 560	5 460	5 590	4 535	M36	1 945	3 200	1 770	1 430	1 690
15 140	8 250	5 960	6 100	5 650	M42	2 794	4 110	2 270	1 840	2 160
15 140	8 250	5 960	6 100	5 650	M42	2 794	4 110	2 270	1 840	2 160
15 140	8 250	5 960	6 100	4 530	M42	2 794	4 110	2 270	1 840	2 160
16 460	8 970	6 480	6 630	6 320	M42	2 794	4 110	2 270	1 840	2 160
16 460	8 970	6 480	6 630	4 360	M42	2 794	4 110	2 270	1 840	2 160
16 460	8 970	6 480	6 630	6 350	M42	2 794	4 110	2 270	1 840	2 160
18 120	9 870	7 130	7 300	6 962	M42	2 794	4 160	2 300	1 860	2 190
18 120	9 870	7 130	7 300	4 747	M42	2 794	4 160	2 300	1 860	2 190
19 560	10 660	7 700	7 880	7 420	M42	2 794	4 160	2 300	1 860	2 190
19 560	10 660	7 700	7 880	4 500	M42	2 794	4 160	2 300	1 860	2 190



3.6 Lubrication

Split plummer block housings SNS are principally intended for grease lubrication. However, a design for oil lubrication is also available by agreement.

Lubricating greases

Arcanol rolling bearing greases

In order to achieve a long operating life and high operational security of the bearing arrangement, we recommend the use of rolling bearing greases Arcanol ➤*92|6.5*. These have been designed and tested for bearing arrangement engineering.

Grease quantity

Basic rule for initial greasing

For initial greasing, the basic rule is that the bearing should be filled with grease to 100% and the free volume of the housing to 60%.
The free volume is the space that remains in the housing once the bearing, adapter sleeve, shaft and seals have been fitted.

Recommended grease quantity

The recommended grease quantity can also be stated in grams once the density of the grease has been taken into consideration ➤*1620|* ▦ *6*.

The recommended grease quantity takes account of:

- filling of the free volume to 60%
- grease with a density of 0,9 g/cm³

▦ **6**
Recommended grease quantity for selected housing/ bearing combinations

Information on the recommended grease quantity for other housing sizes is available by agreement.

Housing		Bearing	Adapter sleeve	Free volume (100%) cm³	Recommended grease quantity ≈ g
SNS22	SNS2264-H-D	22264..-K	H3064	27 550	14 900
SNS30	SNS3036-H-D	23036..-K	H3036	2 900	1 600
	SNS3038-H-D	23038..-K	H3038	3 900	2 250
	SNS3040-H-D	23040..-K	H3040	5 020	3 050
	SNS3044-H-D	23044..-K	H3044	5 770	4 260
	SNS3048-H-D	23048..-K	H3048	7 280	4 550
	SNS3052-H-D	23052..-K	H3052	9 930	6 750
	SNS3056-H-D	23056..-K	H3056	12 500	6 750
	SNS3060-H-D	23060..-K	H3060	14 800	8 000
	SNS3064-H-D	23064..-K	H3064	19 400	10 500
	SNS3068-H-D	23068..-K	H3068	24 000	13 000
	SNS3072-H-D	23072..-K	H3072	30 400	16 450
	SNS3076-H-D	23076..-K	H3076	32 000	17 300
	SNS3080-H-D	23080..-K	H3080	33 500	18 100
	SNS3084-H-D	23084..-K	H3084	35 000	18 900
	SNS3088-H-D	23088..-K	H3088	43 400	23 450
	SNS3092-H-D	23092..-K	H3092	56 600	30 600
	SNS3096-H-D	23096..-K	H3096	55 200	29 850
	SNS30/500-H-D	230/500..-K	H30/500	55 200	29 850
	SNS30/530-H-D	230/530..-K	H30/530	67 500	36 450

continued ▼

6 *Recommended grease quantity for selected housing/ bearing combinations*

Information on the recommended grease quantity for other housing sizes is available by agreement.

Housing		Bearing	Adapter sleeve	Free volume (100%) cm^3	Recommended grease quantity ≈ g
SNS31	SNS3134-H-D	23134..-K	H3134	2 900	1 600
	SNS3136-H-D	23136..-K	H3136	3 810	2 060
	SNS3138-H-D	23138..-K	H3138	5 030	2 720
	SNS3140-H-D	23140..-K	H3140	6 780	3 660
	SNS3144-H-D	23144..-K	H3144	7 520	4 060
	SNS3148-H-D	23148..-K	H3148	10 100	5 990
	SNS3152-H-D	23152..-K	H3152	11 650	6 300
	SNS3156-H-D	23156..-K	H3156	12 550	6 800
	SNS3160-H-D	23160..-K	H3160	17 200	9 300
	SNS3164-H-D	23164..-K	H3164	21 250	11 500
	SNS3168-H-D	23168..-K	H3168	27 550	14 900
	SNS3172-H-D	23172..-K	H3172	28 500	15 400
	SNS3176-H-D	23176..-K	H3176	28 300	15 300
	SNS3180-H-D	23180..-K	H3180	36 450	19 700
	SNS3184-H-D	23184..-K	H3184	45 550	24 600
	SNS3188-H-D	23188..-K	H3188	48 300	26 100
	SNS3192-H-D	23192..-K	H3192	52 000	28 100
	SNS3196-H-D	23196..-K	H3196	55 000	29 700
SNS32	SNS3234-H-D	23234..-K	H2334	5 350	2 900
	SNS3236-H-D	23236..-K	H2336	5 350	2 900
	SNS3238-H-D	23238..-K	H2338	6 500	3 510
	SNS3240-H-D	23240..-K	H2340	6 900	3 760
	SNS3244-H-D	23244..-K	H2344	10 000	5 400
	SNS3248-H-D	23248..-K	H2348	10 200	5 550
	SNS3252-H-D	23252..-K	H2352	15 500	8 400
	SNS3256-H-D	23256..-K	H2356	15 500	8 400
	SNS3260-H-D	23260..-K	H3260	19 000	10 300
	SNS3264-H-D	23264..-K	H3264	25 300	13 700
	SNS3268-H-D	23268..-K	H3268	25 000	13 500
	SNS3272-H-D	23272..-K	H3272	26 800	14 500
	SNS3276-H-D	23276..-K	H3276	38 600	20 850
	SNS3280-H-D	23280..-K	H3280	44 100	23 850
	SNS3284-H-D	23284..-K	H3284	45 000	24 350
	SNS3288-H-D	23288..-K	H3288	49 400	26 700

continued ▲



✎ *Deviation from basic rule*

The recommended degree of filling for the greasing of bearings, as a function of the application and speed, may deviate from 100%.

Relubrication

Bearings with circumferential lubrication groove

Where relubrication is carried out on bearings with a circumferential lubrication groove, the grease is introduced into the housing via the central lubrication hole ➤ *1623* | 6. In this type of relubrication, the grease acts directly on the bearing.

Bearings without lubrication groove

For the relubrication of bearings without a lubrication groove, two relubrication points are provided in the upper housing section. One of the two points has a threaded hole, while the other is indicated by a cast-in pilot hole.

Lubrication holes and lubrication nipples

The lubrication holes and lubrication nipples provided for relubrication differ according to the design of the housing ➤ *1622* | 7. In the case of housings SNS..-H and SNS..-Z, the threaded holes are closed off by a screw plug. This must be removed and permanently replaced by one of the lubrication nipples supplied. In the case of housings SNS..-B, both taper type lubrication nipples are already fitted.

7
Lubrication holes and lubrication nipples

Housing	Thread	Lubrication nipple	Delivery quantity
SNS..-H SNS..-Z	M10×1	Button head lubrication nipple to DIN 3404-M10×1 (with dust cap)	1
		Taper type lubrication nipple to DIN 71412-AM10×1 (with dust cap)	1
SNS..-B	ISO 288-G1/4	Button head lubrication nipple to DIN 3404-A G1/4 St	2

Positions for further lubrication holes

Lubrication holes can be provided at two further points for relubrication of labyrinth seals. These positions are indicated by marks on the housing.

Prevention of overgreasing

In order to prevent overgreasing, the screw plugs must be removed from the two grease outlet holes in the lower housing section for the duration of relubrication. This allows superfluous grease to escape. The grease outlet holes must then be closed off again using the screw plugs.

If unfavourable environmental conditions are present, there is therefore a risk of contaminant ingress into the housing when the grease outlet holes are opened.

6
Positions for relubrication

① *Central lubrication hole, for bearings with lubrication groove*
② *Points for relubrication of bearings without lubrication groove*
③ *Points for relubrication of labyrinth seals*
④ *Grease outlet holes*

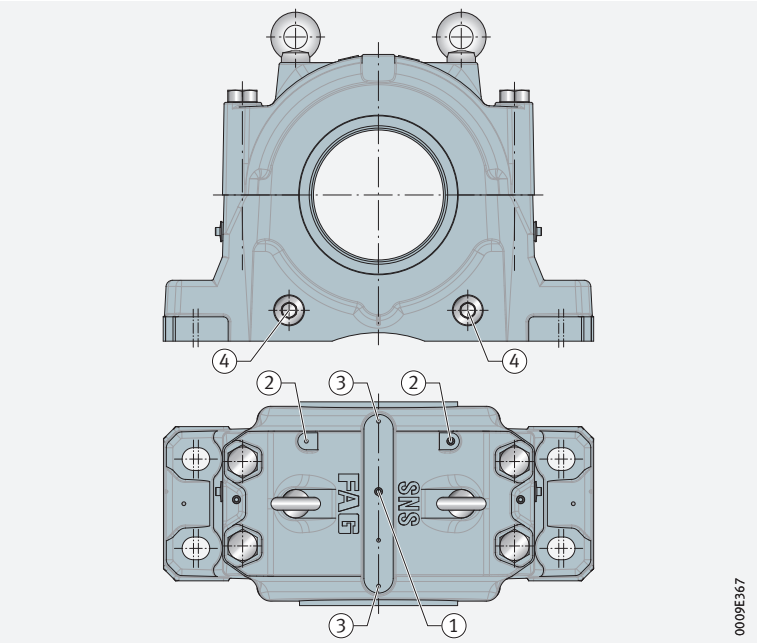

3.7 Sealing

Seals

✎ *Standard seals*

For sealing of the bearing housings, the following standard seals are available:

- labyrinth seals and taconite seals, each in a split and unsplit design. These seals are matched to the rectangular section annular slots on both sides of the housings SNS..-H and SNS..-Z
- Bolt-on seal. This seal is screw mounted to the outside of housings SNS..-B

Seals must be ordered separately. They are supplied individually.
If a continuous shaft is present, two seals are necessary.

Labyrinth seals NTS

✎ *Non-contact seal for high circumferential velocities*

Labyrinth seals NTS give non-contact sealing. They are therefore suitable for high circumferential velocities. The O ring, which is pressed between the labyrinth ring and shaft, is made from fluoro rubber FKM and is suitable for temperatures of up to +200 °C. The labyrinth seal allows shaft misalignment of up to 0,3° in both directions and is suitable for grease lubrication.

✎ *Relubrication*

If necessary, the labyrinth can be relubricated. For this purpose, a lubrication hole must be made in the upper housing section for each labyrinth seal. The optimum positions are indicated by cast-in pilot holes.

Taconite seals NTC

✎ *Seals for extreme contamination impact*

Taconite seals NTC are combined seals comprising a labyrinth seal and a V ring. These seals are suitable for extreme operating conditions in relation to contamination and dust. The V ring is made from NBR and is suitable for temperatures of up to +100 °C.

The taconite seal allows shaft misalignment of up to 0,3° in both directions and is suitable for grease lubrication. For relubrication, the seal is fitted with a lubrication nipple.

Split labyrinth seals NTSG

✎ *Split seal reduces mounting work*

For plummer block housings SNS, labyrinth seals are also available in a split design. As a result, the work involved in fitting or replacing the seal can be considerably reduced, especially if a split bearing is also fitted.

The characteristics and operating limits correspond to those of the unsplit labyrinth seal NTS.

Split labyrinth seals NTSG are available in various sizes ➤ *1624* | ▦ *8*. Other sizes are available by agreement.

▦ *8*
Sizes

Sizes of split labyrinth seals for	
Metric shaft	Inch size shaft
NTSG34	NTSG34×515
NTSG36	NTSG36×607
NTSG38	–
NTSG40	–
NTSG44	–
NTSG48	–
NTSG52	–

Split taconite seals NTCG

Split seal reduces mounting work

For plummer block housings SNS, taconite seals are also available in a split design. As a result, the work involved in fitting or replacing the seal can be considerably reduced, especially if a split bearing is also fitted.

Split taconite seals are supplied by agreement.

Bolt-on seal BTAC

Seal for extreme contamination impact

Bolt-on seals BTAC are combined seals comprising a labyrinth ring and a V ring. They are screw mounted to the outside of the housing and, unlike all other seals for plummer block housings SNS, are not inserted in the annular slots in the housing. The seals are suitable for extreme operating conditions in relation to contamination and dust. The V ring is made from NBR and is suitable for temperatures of up to +100 °C.

The Bolt-on seal allows shaft misalignment of up to 0,4° in both directions and is suitable for grease lubrication. For relubrication, the seal is fitted with a lubrication nipple.

The seals are available in the sizes BTAC34 to BTAC68.

Special housing design required

When using Bolt-on seals, housings of a special design SNS..-B are required instead of the designs SNS..-H and SNS..-Z suitable for all other seals.

Covers

Covers are used in the case of housings closed on one side. The covers must be ordered separately.

Covers NDK

For housings with annular slot

Covers NDK fit in the rectangular section annular slots of the housings, designed for labyrinth and taconite seals, SNS..-H and SNS..-Z. They are suitable for temperatures up to +200 °C.

Covers BDK

For housings with Bolt-on seal

Covers BDK are screw mounted to the outside of the housing. They are suitable for the housings SNS..-B designed for the Bolt-on seal.

Characteristics and operating limits

The characteristics and operating limits of the standard seals and covers are compared in an overview ➤*1626*|▦*9*.



9
Standard seals and covers for plummer block housings SNS

++ = *highly suitable*
\+ = *suitable*
(+) = *suitable with restrictions*
– = *not suitable*

Seals and covers		**Labyrinth seal, unsplit**
		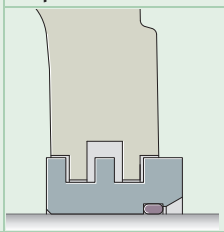
Designation		**NTS**
Material		Steel, FKM
Pieces per pack		1
Suitability for sealing against		
dust		(+)
fine, solid particles		+
coarse, solid particles		+
slivers		++
spray liquids		–
Operating limits		
Long term temperature	°C	–20 to +200 (due to FKM)
	°F	–4 to +390 (due to FKM)
Circumferential velocity	m/s	No restriction
Misalignment	°	≦0,3
Low friction		++
Axial shaft displacement (suitability as non-locating bearing)		+
Vertical arrangement		–
Suitability for grease relubrication		+
Suitability for oil lubrication		–
Compatibility with sunlight		++
Preconditions		
Tolerance class[1)] of shaft diameter		h8 (h9)
Shaft roughness	µm	Ra 3,2

1) *The envelope requirement Ⓔ applies*

Taconite seal, unsplit	Labyrinth seal, split	Bolt-on seal, unsplit	Covers	
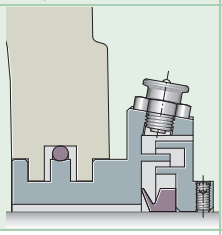	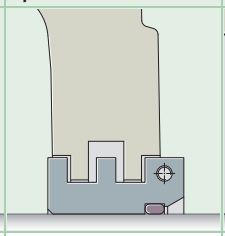	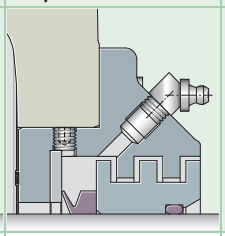	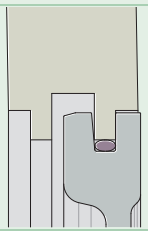	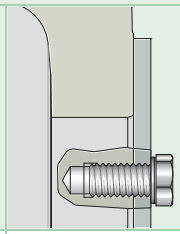
NTC	**NTSG**	**BTAC**	**NDK**	**BDK**
Steel, NBR	Steel, FKM	Steel, NBR	Steel, FKM	Steel
1	1	1	1	1
++	(+)	++	++	++
++	+	++	++	++
++	+	++	++	++
++	++	++	++	++
++	–	++	++	++
–30 to +100 (due to NBR)	–20 to +200 (due to FKM)	–30 to +100 (due to NBR)	–20 to +200 (due to FKM)	Not applicable
–22 to +210 (due to NBR)	–4 to +390 (due to FKM)	–22 to +210 (due to NBR)	–4 to +390 (due to FKM)	Not applicable
≦12	No restriction	≦12	Not applicable	Not applicable
≦0,3	≦0,3	≦0,4	Not applicable	Not applicable
+	++	+	Not applicable	Not applicable
+	+	+	Not applicable	Not applicable
(+)	–	–	++	++
+	+	++	++	++
(+)	–	–	+	–
++	++	++	++	++
h8 (h9)	h8 (h9)	h8 (h9)	Not applicable	Not applicable
Ra 3,2	Ra 3,2	Ra 3,2	Not applicable	Not applicable



3.8 Dimensions, tolerances

Dimensions

The dimensions of the housings conform to ISO 113.

Interchangeability

FAG plummer block housings SNS are a further development of the FAG plummer block housings SD31. The design envelope and mounting dimensions of both series of housings are identical and the housings are interchangeable 1:1.

The interchangeability with other series of FAG housings is as follows:

- All bearing series that can be combined with the plummer block housings SD5 and SD6 can be fitted in plummer block housings SNS
- Bearing series that can be combined with the plummer block housings S30 can only be fitted in certain cases in plummer block housings SNS

The dimensions of housings SD5, SD6 and S30 are not identical with the dimensions of housings SNS.

Tolerances for the bearing seat

The bearing seat in split plummer block housings SNS is machined to the tolerance class G7 in accordance with DIN EN ISO 286-1.

By agreement, the housings can also be supplied with other tolerance classes for the bearing seat.

3.9 Housing configurations

Possible combinations

Modular construction allows numerous combinations

On the basis of the standard components, the following features can be varied in the housing configuration:

- location of bearings with a tapered bore by means of an adapter sleeve on a shaft of constant diameter or of bearings with a cylindrical bore directly on a stepped shaft
- sealing of housing by labyrinth seals (unsplit or split), taconite seals (unsplit or split) or Bolt-on seals (in combination with housings of design SNS..-B)
- with a continuous shaft or a housing closed on one side
- design of the bearing arrangement as a locating bearing arrangement or a non-locating bearing arrangement
- spherical roller bearing in a split or unsplit design

The resulting possible housing configurations make it possible to fulfil various requirements on the bearing positions by means of standard components ➤1628|7 to ➤1631|16.

7
Plummer block housing SNS for bearings with tapered bore and adapter sleeve (2 labyrinth seals NTS)

① *Locating bearing*
② *Non-locating bearing*

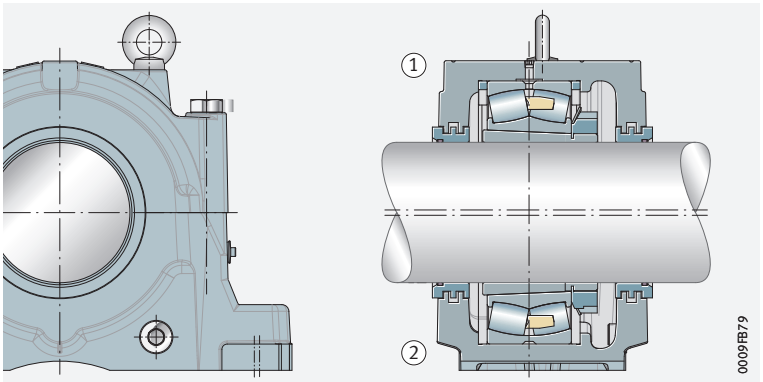

8
Plummer block housing SNS for bearings with tapered bore and adapter sleeve (labyrinth seal NTS and cover NDK)

① *Locating bearing*
② *Non-locating bearing*

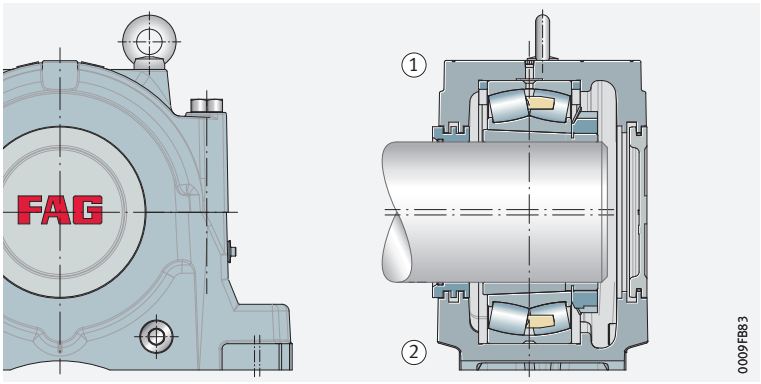

9
Plummer block housing SNS for bearings with tapered bore and adapter sleeve (2 taconite seals NTC)

① *Locating bearing*
② *Non-locating bearing*

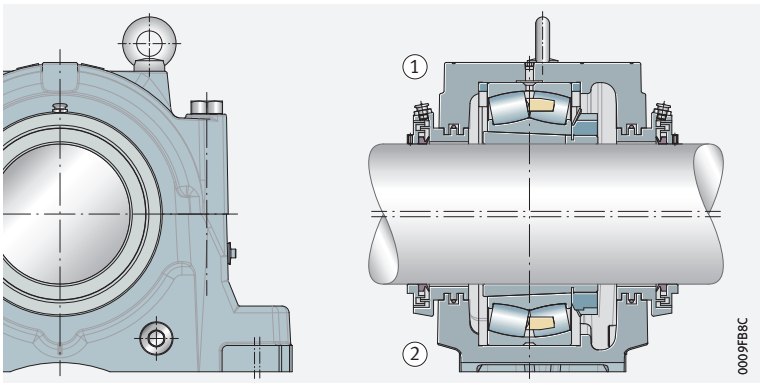

10
Plummer block housing SNS for bearings with tapered bore and adapter sleeve (taconite seal NTC and cover NDK)

① *Locating bearing*
② *Non-locating bearing*

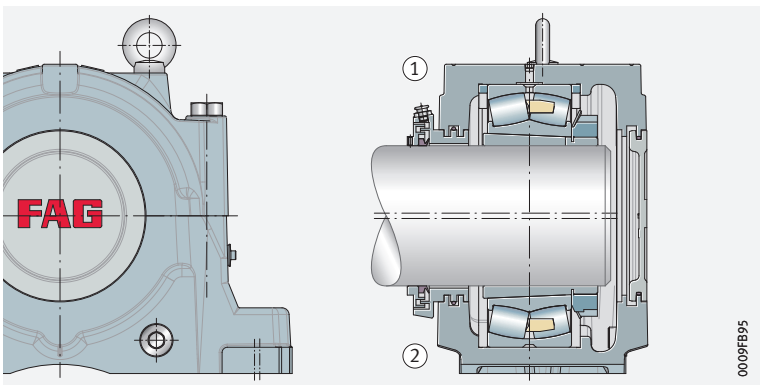

11
Plummer block housing SNS for bearings with cylindrical bore (2 labyrinth seals NTS)

① *Locating bearing*
② *Non-locating bearing*

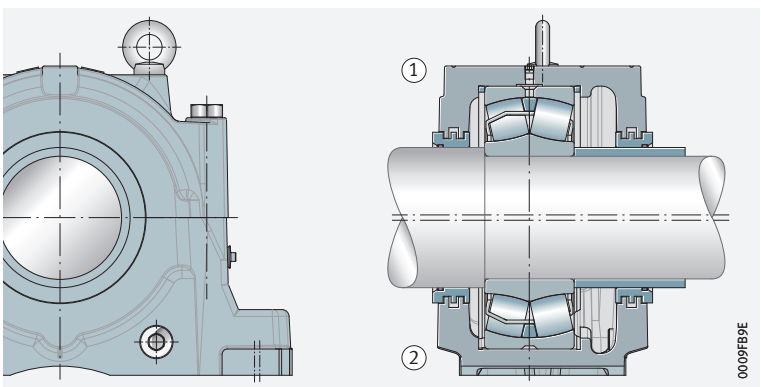

12
Plummer block housing SNS for bearings with cylindrical bore (labyrinth seal NTS and cover NDK)

① *Locating bearing*
② *Non-locating bearing*

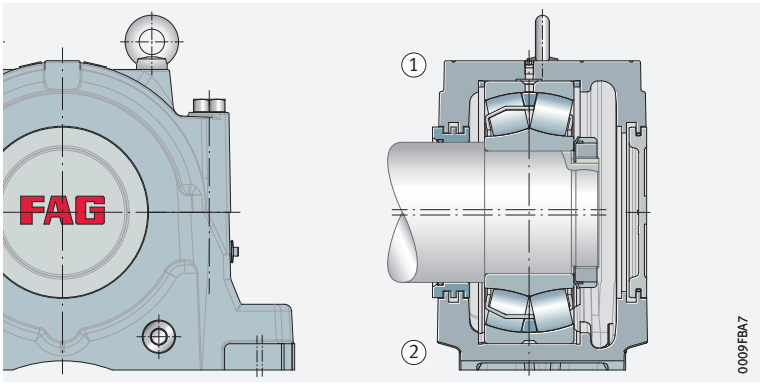

13
Plummer block housing SNS for bearings with cylindrical bore (2 taconite seals NTC)

① *Locating bearing*
② *Non-locating bearing*

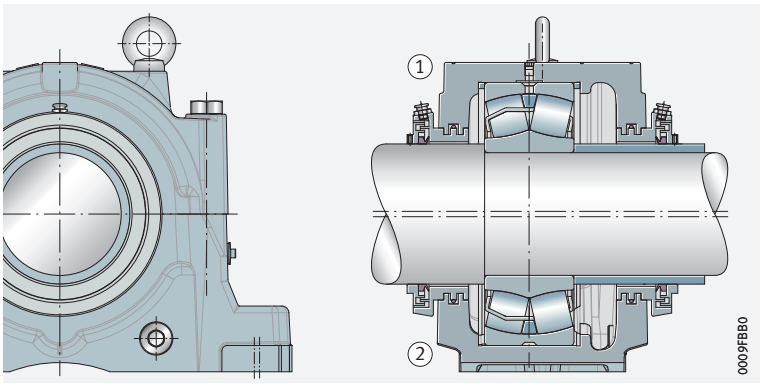

14
Plummer block housing SNS for bearings with cylindrical bore (taconite seal NTC and cover NDK)

① *Locating bearing*
② *Non-locating bearing*

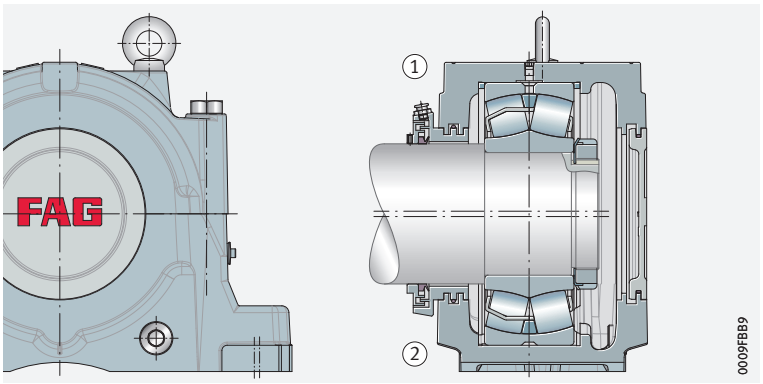

15
Plummer block housing SNS for bearings with tapered bore and adapter sleeve (2 Bolt-on seals BTAC)

① *Locating bearing*
② *Non-locating bearing*

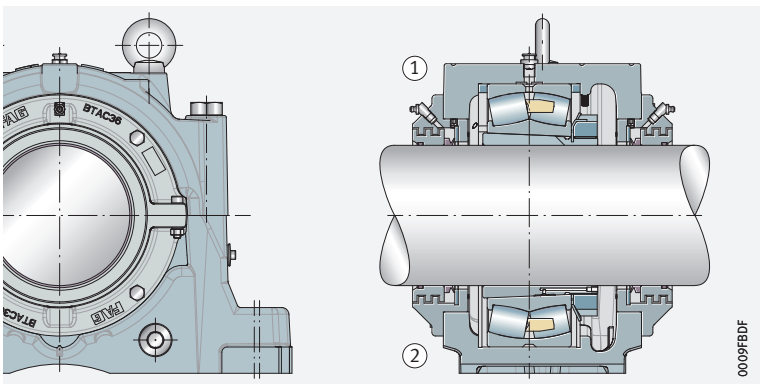

16
Plummer block housing SNS for bearings with tapered bore and adapter sleeve (Bolt-on seal BTAC and cover BDK)

① *Locating bearing*
② *Non-locating bearing*

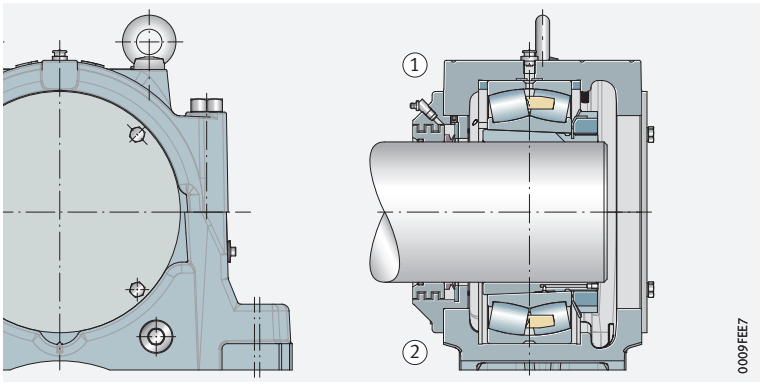

Mounting of split spherical roller bearings

✎ Simplified bearing replacement by means of split bearing

In the case of plummer block housings SNS, an unsplit spherical roller bearing with a tapered bore and adapter sleeve can be replaced by a split spherical roller bearing ➤*1631*|*17*.

17
Plummer block housing SNS with split and unsplit spherical roller bearing

① *Locating bearing with unsplit bearing*
② *Non-locating bearing with unsplit bearing*
③ *Locating bearing with split bearing*
④ *Non-locating bearing with split bearing*

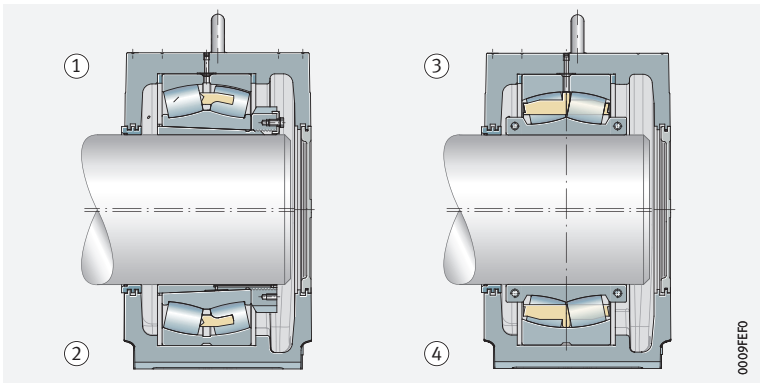

In order to ensure selection of the correct combination of housing and bearing when using split bearings, please contact Schaeffler.

The range of split spherical roller bearings is described in detail in a separate publication TPI 250.

3.10 Structure of housing designation

The designation of the housings and associated seals, covers and locating rings follows a set model. Description of the designation components ➤*1632*|▦ *10* to ➤*1634*|▦ *14*. Structure of designations ➤*1632*|⧉ *18* to ➤*1634*|⧉ *21*.

▦ 10
Components of the designations of plummer block housings SNS

Characteristic		Code	Description
①	Series	SNS	Split plummer block housings SNS
②	ISO dimension series of bearing	30	ISO dimension series 22, 23, 30 and 40
		31	ISO dimension series 22, 23 and 31
		32	ISO dimension series 22 and 32
		40	ISO dimension series 40
③	Housing size	36	For bearings of ISO dimension series 30, 31 and 32:
		/530	■ Bore code of bearing
④	Housing design	H	Main design ➤*1632*|▦ *11*
		Z	Additional design ➤*1632*|▦ *11*
		B	Design for Bolt-on seal
⑤	Housing material	D	Spheroidal graphite cast iron (standard)
		LT	Spheroidal graphite cast iron (for lower temperatures)

⧉ 18
Designation structure of plummer block housings SNS, example



Plummer block housings SNS with labyrinth and taconite seals are available in the housing designs H and Z. Spherical roller bearings can be fitted, as a function of the bearing series, in one of the two housing designs ➤*1632*|▦ *11*.

▦ 11
Allocation of housing designs H and Z to bearing types

Housing design	Bearing series
H	Spherical roller bearings with tapered bore and adapter sleeve
	Split spherical roller bearings
	Following spherical roller bearings with cylindrical bore: 22232, 22234, 22252, 22272, 22326, 22328, 22330, 22332, 22334, 22338, 22344, 22348, 22352, 22356, 23232, 24036
Z	Spherical roller bearings with cylindrical bore, not allocated to housing design H

12 *Components of the designations of standard seals*

Characteristic		Code	Description
①	Series	NTS	Labyrinth seal, unsplit
		NTC	Taconite seal, unsplit
		NTSG	Labyrinth seal, split
		BTAC	Bolt-on seal, unsplit
②	Dimension series	36	Dimension series 36
③	Shaft diameter	No further indications	Standard shaft diameter of dimension series
		/125	Metric shaft diameter: ■ 125 mm
		X415	Inch size shaft diameter: ■ 4 inch + 15 · $^{1}/_{16}$ inch = $4^{15}/_{16}$ inch

19 *Designation structure of standard seals, examples*

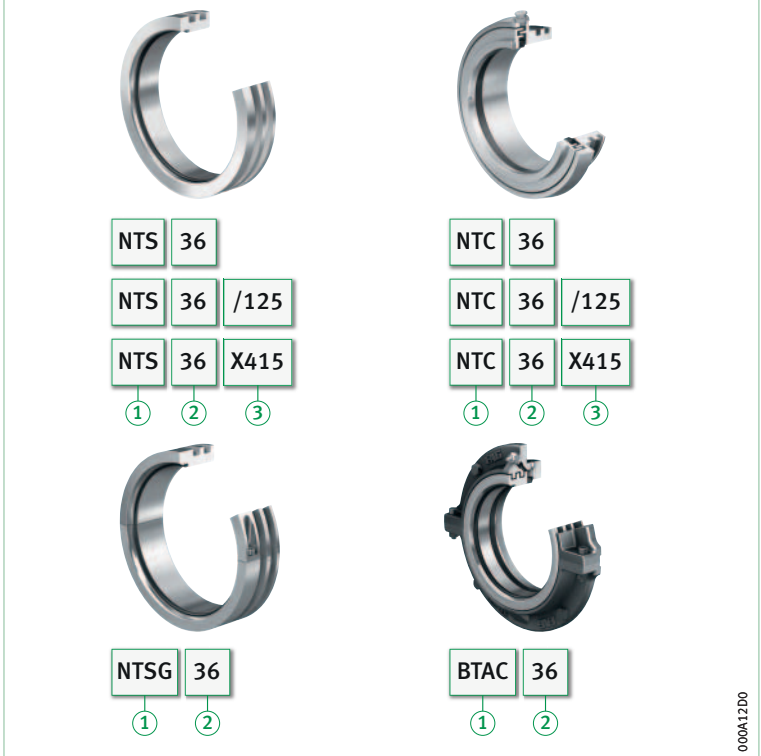

13 *Components of designations of covers*

Characteristic		Code	Description
①	Series	NDK	Cover for plummer block housings SNS..-H and SNS..-Z
		BDK	Cover for plummer block housing SNS..-B
②	Dimension series	36	Dimension series 36

20
Designation structure of covers, example

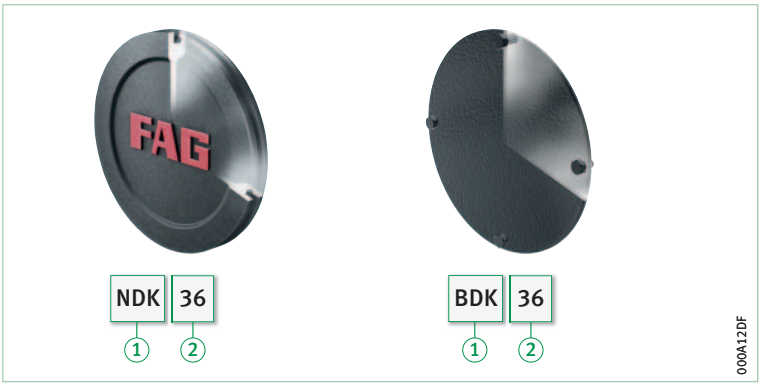

14
Components of designations of locating rings

Characteristic		Code	Description
①	Series	NFR	Locating ring
②	Outside diameter	280	Outside diameter 280 mm
③	Width	10	Width 10 mm

21
Designation structure of locating rings, example

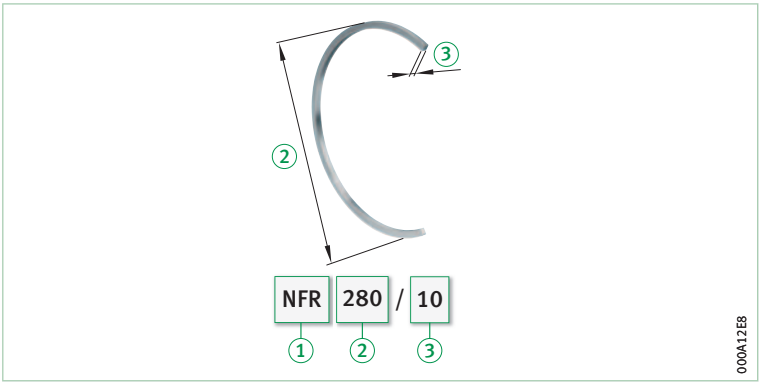

Ordering examples

Separate ordering of housing body and accessories

When a split plummer block housing SNS is ordered, the housing designation only describes the housing body. The other components such as seals, covers or locating rings must be ordered separately in the specific design required. The rolling bearing and, if necessary, the adapter sleeve must also be ordered separately.

Plummer block housings SNS with a bearing fitted give non-locating bearing arrangements. These can be converted into locating bearing arrangements through the additional insertion of locating rings NFR.

The ordering examples show the construction of orders for selected housing combinations and the appropriate bearings. The allocation of housings, bearings and accessories for all housing sizes is shown in the product tables ➤ *1638*.

Example 1

Plummer block housing SNS made from spheroidal graphite cast iron, closed on one side, spherical roller bearing 23136-E1A-K-M as locating bearing, location by means of adapter sleeve on shaft diameter of 160 mm, labyrinth seal.

Order

1 plummer block housing	SNS3136-H-D
1 spherical roller bearing	23136-E1A-K-M
1 adapter sleeve	H3136-HG
2 locating rings	NFR300/10
1 cover	NDK36
1 labyrinth seal	NTS36

Example 2

Plummer block housing SNS made from spheroidal graphite cast iron, continuous shaft, spherical roller bearing 23136-E1A-K-M as non-locating bearing, location by means of adapter sleeve on shaft diameter of 160 mm, taconite seal.

✎ *Order*

1 plummer block housing	SNS3136-H-D
1 spherical roller bearing	23136-E1A-K-M
1 adapter sleeve	H3136-HG
2 taconite seals	NTC36

Example 3

Plummer block housing SNS made from spheroidal graphite cast iron, closed on one side, spherical roller bearing 23136-E1A-K-M as non-locating bearing, location by means of adapter sleeve on shaft diameter of 160 mm, Bolt-on seal.

✎ *Order*

1 plummer block housing	SNS3136-B-D
1 spherical roller bearing	23136-E1A-K-M
1 adapter sleeve	H3136-HG
1 cover	BDK36
1 Bolt-on seal	BTAC36

3.11 Mounting and dismounting

Eye bolts

The upper housing section has 2 eye bolts in accordance with DIN 580. These are intended as locating points for mounting and dismounting of the housing. The load carrying capacity of the eye bolts allows lifting of the housing including a bearing fitted in the housing.

Eye bolts must always be screwed fully into the housing.

Eye bolts must not be subjected to a mass greater than that of the housing together with the bearing fitted in the housing.

Foot screws

Foot screws are used for screw mounting of the housing to the mounting surface. They are not included in the scope of delivery of the housings.

The appropriate screw size for each housing is given in the product tables ➤*1638*.

✎ *Tightening torques for foot screws*

The following table contains tightening torques for metric coarse pitch threads in accordance with DIN 13, DIN 962 and DIN ISO 965-2.

The maximum tightening torques are valid when utilising 90% of the yield stress of the screw material 8.8 and with a friction factor of 0,14. We recommend that foot screws should be tightened to approx. 70% of these values ➤*1635*.



15
Tightening torques for foot screws with metric thread in accordance with DIN 13, DIN 962 and DIN ISO 965-2

Nominal screw diameter	Maximum tightening torque Nm	Recommended tightening torque Nm
M24	798	550
M30	1 597	1 100
M36	2 778	1 950
M42	3 991	2 750
M48	6 021	4 250

Permissible shaft end designs

✎ No contact between shaft and cover

In the case of a housing closed on one side, the length of the shaft in the housing must be restricted such that no contact occurs between the shaft and the cover. In this case, the displacement facility of the bearing in a non-locating bearing arrangement must be taken into consideration. The basis for determining the permissible length of the shaft is the spacing between the centre of the bearing seat and the cover ➤*1636*|*22* and ➤*1636*|*16*.

22
Spacing between centre of bearing seat and cover

a_d = *spacing between centre of bearing seat and cover*

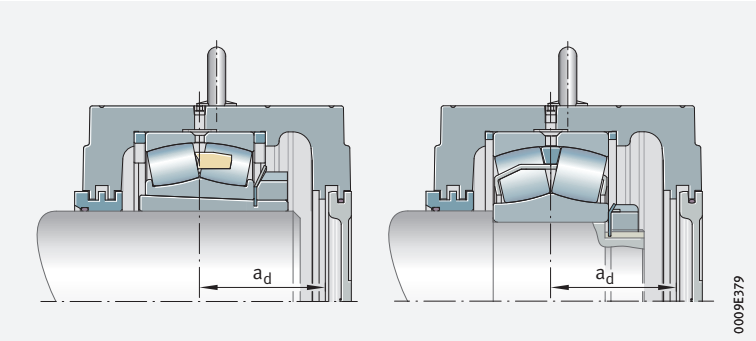

16
Spacing between centre of bearing seat and cover

Housing					Spacing
SNS22	SNS30	SNS31	SNS32	SNS40	a_d mm
–	SNS3036	SNS3134	–	–	107,5
–	SNS3038	SNS3136	–	–	113,5
–	SNS3040	SNS3138	SNS3234	–	117,5
–	–	–	SNS3236	–	117,5
–	SNS3044	SNS3140	SNS3238	–	127,5
–	SNS3048	SNS3144	SNS3240	–	133,5
–	SNS3052	SNS3148	SNS3244	–	141,5
–	SNS3056	SNS3152	SNS3248	–	151,5
–	SNS3060	SNS3156	–	–	154,5
–	SNS3064	SNS3160	SNS3252	–	175,5
–	–	–	SNS3256	–	175,5
–	SNS3068	SNS3164	SNS3260	–	186,5
–	SNS3072	–	–	–	186,5
SNS2264	SNS3076	SNS3168	SNS3264	SNS4076	202,5
–	SNS3080	SNS3172	SNS3268	SNS4080	208,5
–	SNS3084	SNS3176	–	SNS4084	208,5
–	SNS3088	SNS3180	SNS3272	SNS4088	223,5
–	SNS3092	SNS3184	SNS3276	SNS4092	243,5
–	SNS3096	SNS3188	SNS3280	SNS4096	243,5
–	SNS30/500	–	–	SNS40/500	243,5
–	SNS30/530	SNS3192	SNS3284	SNS40/530	248,5
–	–	SNS3196	SNS3288	–	248,5

Detailed information on mounting

Careful and correct mounting of the bearing housing, including the correct mounting of the rolling bearing in the housing, is fundamental to reliable operation. Detailed information is given in the publication MON 84 *https://www.schaeffler.de/std/1D63*.

3.12 Legal notice regarding data freshness

The further development of products may also result in technical changes to catalogue products

Of central interest to Schaeffler is the further development and optimisation of its products and the satisfaction of its customers. In order that you, as the customer, can keep yourself optimally informed about the progress that is being made here and with regard to the current technical status of the products, we publish any product changes which differ from the printed version in our electronic product catalogue.

We therefore reserve the right to make changes to the data and illustrations in this catalogue. This catalogue reflects the status at the time of printing. More recent publications released by us (as printed or digital media) will automatically precede this catalogue if they involve the same subject. Therefore, please always use our electronic product catalogue to check whether more up-to-date information or modification notices exist for your desired product.

Link to electronic product catalogue

The following link will take you to the Schaeffler electronic product catalogue: *https://medias.schaeffler.com*.

3.13 Further information

In addition to the data in this chapter, the following chapters must also be observed in the selection of a housing:

- Lubrication ➤*70|6*
- Locating and non-locating bearing concepts ➤*1559|1.2*
- Housing materials ➤*1561|1.3*

Further information:

- Product tables on split plummer block housings SNS for inch size shaft diameters GK 1
- Product tables on split plummer block housings SNS in combination with Bolt-on seals GK 1
- Electronic housing selection wizard *https://www.schaeffler.de/std/1D61*



Plummer block housings

SNS, split
For spherical roller bearings with tapered bore and adapter sleeve, metric shaft

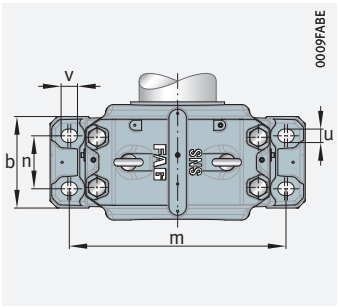

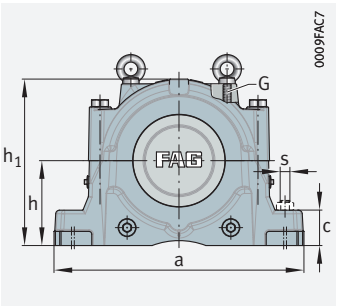

d_1 = 115 – 170 mm

Shaft	Housing																Housing
	Dimensions															Mass	Designation
d_1	h	h_1	g	b	c	a	m	n	v	u	s	D	k	e	G	m	➤*1632|3.10*
																≈ kg	
115	170	333	230	180	70	510	430	100	34	28	M24	280	108	14	M16	75	**SNS3134-H-D**
125	180	353	240	190	75	530	450	110	34	28	M24	300	116	15	M16	83	**SNS3136-H-D**
135	190	375	260	210	80	560	480	120	34	28	M24	320	124	10	M20	102	**SNS3138-H-D**
140	180	353	240	190	75	530	450	110	34	28	M24	290	115	15	M16	86	**SNS3038-H-D**
	210	411	280	230	85	610	510	130	42	35	M30	340	132	10	M20	133	**SNS3140-H-D**
	180	353	240	190	75	530	450	110	34	28	M24	290	115	15	M16	86	**SNS3038-H-D**
150	190	375	260	210	80	560	480	120	34	28	M24	310	122	10	M20	105	**SNS3040-H-D**
	220	434	290	240	90	640	540	140	42	35	M30	360	140	12	M20	148	**SNS3048-H-D**
	170	333	230	180	70	510	430	100	34	28	M24	280	108	14	M16	75	**SNS3134-H-D**
	170	333	230	180	70	510	430	100	34	28	M24	280	108	14	M16	75	**SNS3134-H-D**
	190	375	260	210	80	560	480	120	34	28	M24	310	122	10	M20	105	**SNS3234-H-D**
160	190	375	260	210	80	560	480	120	34	28	M24	320	124	10	M20	102	**SNS3138-H-D**
	170	333	230	180	70	510	430	100	34	28	M24	280	108	14	M16	74	**SNS3036-H-D**
	170	333	230	180	70	510	430	100	34	28	M24	280	108	14	M16	74	**SNS3036-H-D**
	180	353	240	190	75	530	450	110	34	28	M24	300	116	15	M16	83	**SNS3136-H-D**
	180	353	240	190	75	530	450	110	34	28	M24	300	116	15	M16	83	**SNS3136-H-D**
	190	375	260	210	80	560	480	120	34	28	M24	320	124	10	M20	102	**SNS3236-H-D**
170	210	411	280	230	85	610	510	130	42	35	M30	340	132	10	M20	133	**SNS3140-H-D**
	240	474	310	260	95	700	600	150	42	35	M30	400	148	12	M24	184	**SNS3148-H-D**
	180	353	240	190	75	530	450	110	34	28	M24	290	115	15	M16	86	**SNS3038-H-D**
	180	353	240	190	75	530	450	110	34	28	M24	290	115	15	M16	86	**SNS3038-H-D**
	190	375	260	210	80	560	480	120	34	28	M24	320	124	10	M20	102	**SNS3138-H-D**
	190	375	260	210	80	560	480	120	34	28	M24	320	124	10	M20	102	**SNS3138-H-D**
	210	411	280	230	85	610	510	130	42	35	M30	340	132	10	M20	133	**SNS3238-H-D**

medias *https://www.schaeffler.de/std/1F9A*

① Locating bearing; ② Non-locating bearing

1) Split bearing in associated housing has restricted usability. Please ask for further information.

2) Alternatively also available with split labyrinth seal NTSG.

3) With NTSG: width g_L increased by 16 mm.

4) With NTSG: width g_{LD} increased by 8 mm.

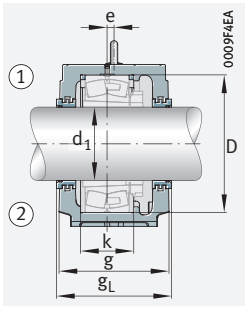

Labyrinth seal NTS

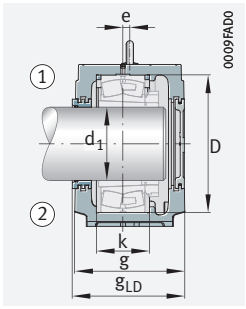

Labyrinth seal NTS
Cover NDK

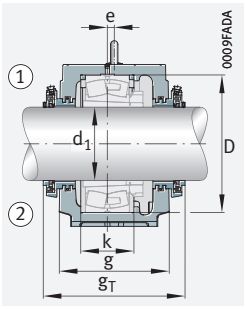

Taconite seal NTC

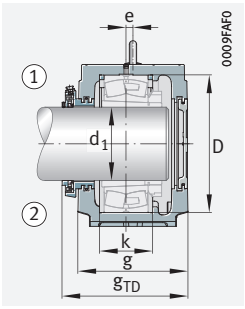

Taconite seal NTC
Cover NDK

Spherical roller bearings and accessories

Bearing	Adapter sleeve	Locating ring		Labyrinth seal			Taconite seal			Cover
			Quantity		g_L mm	g_{LD} mm		g_T mm	g_{TD} mm	
22326..-K	H2326	NFR280/7,5	2	NTS34/115	241	235,5	NTC34/115	299	264	NDK34
22328..-K	H2328	NFR300/7	2	NTS36/125	251	245,5	NTC36/125	310	274,5	NDK36
22330..-K	H2330	NFR320/8	2	NTS38/135	271	265,5	NTC38/135	330	294,5	NDK38
22232..-K	H3132(-HG)	NFR290/17,5	2	NTS38/140	251	245,5	NTC38/140	312	275,5	NDK38
22332..-K	H2332(-HG)	NFR340/9	2	NTS40/140	291	285,5	NTC40/140	347	313	NDK40
23232..-K	H2332(-HG)	NFR290/5,5	2	NTS38/140	251	245,5	NTC38/140	312	275,5	NDK38
22234..-K	H3134(-HG)	NFR310/18	2	NTS40/150	271	265,5	NTC40/150	326	293	NDK40
22334..-K	H2334(-HG)	NFR360/10	2	NTS48/150	301	295,5	NTC48/150	380	335	NDK48
23134..-K	H3134(-HG)	NFR280/10	2	NTS34[2]	241[3]	235,5[4]	NTC34	299	264,5	NDK34
231SM150-MA[1]	–	NFR280/10	2	NTS34[2]	241[3]	235,5[4]	NTC34	299	264,5	NDK34
23234..-K	H2334(-HG)	NFR310/6	2	NTS40/150	271	265,5	NTC40/150	327	293	NDK40
22236..-K	H3136(-HG)	NFR320/19	2	NTS38/160	271	265,5	NTC38/160	329	294,5	NDK38
23036..-K	H3036(-HG)	NFR280/17	2	NTS36[2]	241[3]	235,5[4]	NTC36	304	267	NDK36
230SM160-MA[1]	–	NFR280/17	2	NTS36[2]	241[3]	235,5[4]	NTC36	304	267	NDK36
23136..-K	H3136(-HG)	NFR300/10	2	NTS36[2]	251[3]	245,5[4]	NTC36	314	277	NDK36
231SM160-MA[1]	–	NFR300/10	2	NTS36[2]	251[3]	245,5[4]	NTC36	314	277	NDK36
23236..-K	H2336(-HG)	NFR320/6	2	NTS38/160	271	265,5	NTC38/160	330	294,5	NDK38
22238..-K	H3138(-HG)	NFR340/10	4	NTS40/170	291	285,5	NTC40/170	346	313	NDK40
22338..-K	H2338(-HG)	NFR400/8	2	NTS48/170	321	315,5	NTC48/170	401	355	NDK48
23038..-K	H3038(-HG)	NFR290/10	4	NTS38[2]	251[3]	245,5[4]	NTC38	312	275,5	NDK38
230SM170-MA[1]	–	NFR290/10	4	NTS38[2]	251[3]	245,5[4]	NTC38	312	275,5	NDK38
23138..-K	H3138(-HG)	NFR320/10	2	NTS38[2]	271[3]	265,5[4]	NTC38	334	297	NDK38
231SM170-MA	–	NFR320/10	2	NTS38[2]	271[3]	265,5[4]	NTC38	334	297	NDK38
23238..-K	H2338(-HG)	NFR340/6	2	NTS40/170	291	285,5	NTC40/170	347	313	NDK40

Plummer block housings

SNS, split
For spherical roller bearings with tapered bore and adapter sleeve, metric shaft

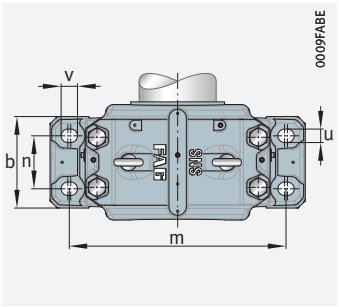

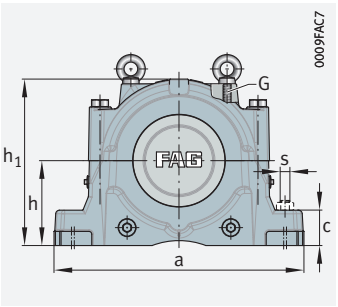

d_1 = 180 – 240 mm

Shaft	Housing																Housing
	Dimensions															Mass	Designation
d_1	h	h_1	g	b	c	a	m	n	v	u	s	D	k	e	G	m	➤*1632|3.10*
																≈ kg	
180	220	434	290	240	90	640	540	140	42	35	M30	360	140	12	M20	148	**SNS3048-H-D**
	260	516	320	280	100	770	650	160	50	42	M36	420	166	13	M24	249	**SNS3056-H-D**
	190	375	260	210	80	560	480	120	34	28	M24	310	122	10	M20	105	**SNS3040-H-D**
	190	375	260	210	80	560	480	120	34	28	M24	310	122	10	M20	105	**SNS3040-H-D**
	210	411	280	230	85	610	510	130	42	35	M30	340	132	10	M20	133	**SNS3140-H-D**
	210	411	280	230	85	610	510	130	42	35	M30	340	132	10	M20	133	**SNS3140-H-D**
	220	434	290	240	90	640	540	140	42	35	M30	360	140	12	M20	148	**SNS3240-H-D**
200	240	474	310	260	95	700	600	150	42	35	M30	400	148	12	M24	184	**SNS3148-H-D**
	280	550	320	280	105	790	670	160	50	42	M36	460	166	16	M24	264	**SNS3156-H-D**
	210	411	280	230	85	610	510	130	42	35	M30	340	130	10	M20	129	**SNS3044-H-D**
	210	411	280	230	85	610	510	130	42	35	M30	340	130	10	M20	129	**SNS3044-H-D**
	220	434	290	240	90	640	540	140	42	35	M30	370	140	12	M20	146	**SNS3144-H-D**
	220	434	290	240	90	640	540	140	42	35	M30	370	140	12	M20	146	**SNS3144-H-D**
	240	474	310	260	95	700	600	150	42	35	M30	400	164	12	M24	183	**SNS3244-H-D**
220	260	516	320	280	100	770	650	160	50	42	M36	440	164	13	M24	238	**SNS3152-H-D**
	300	591	350	310	110	830	710	190	50	42	M36	500	180	22	M30	317	**SNS3160-H-D**
	220	434	290	240	90	640	540	140	42	35	M30	360	140	12	M20	148	**SNS3048-H-D**
	220	434	290	240	90	640	540	140	42	35	M30	360	140	12	M20	148	**SNS3048-H-D**
	240	474	310	260	95	700	600	150	42	35	M30	400	148	12	M24	184	**SNS3148-H-D**
	240	474	310	260	95	700	600	150	42	35	M30	400	148	12	M24	184	**SNS3148-H-D**
	260	516	320	280	100	770	650	160	50	42	M36	440	180	13	M24	235	**SNS3248-H-D**
240	300	591	350	310	110	830	710	190	50	42	M36	480	181	22	M30	332	**SNS3064-H-D**
	320	631	370	330	115	880	750	200	50	42	M36	540	196	23	M30	368	**SNS3164-H-D**
	240	474	310	260	95	700	600	150	42	35	M30	400	148	12	M24	180	**SNS3052-H-D**
	240	474	310	260	95	700	600	150	42	35	M30	400	148	12	M24	180	**SNS3052-H-D**
	260	516	320	280	100	770	650	160	50	42	M36	440	164	13	M24	238	**SNS3152-H-D**
	260	516	320	280	100	770	650	160	50	42	M36	440	164	13	M24	238	**SNS3152-H-D**
	300	591	350	310	110	830	710	190	50	42	M36	480	194	22	M30	331	**SNS3252-H-D**

medias *https://www.schaeffler.de/std/1F9A*

① Locating bearing; ② Non-locating bearing

1) Split bearing in associated housing has restricted usability. Please ask for further information.

2) Alternatively also available with split labyrinth seal NTSG.

3) With NTSG: width g_L increased by 16 mm.

4) With NTSG: width g_{LD} increased by 8 mm.

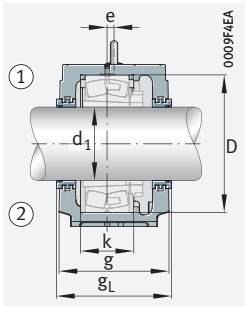

Labyrinth seal NTS

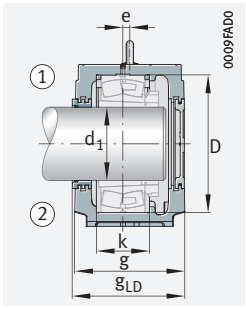

Labyrinth seal NTS
Cover NDK

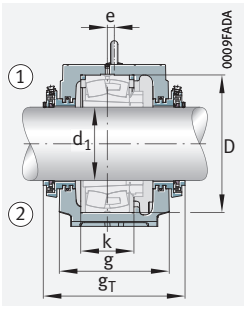

Taconite seal NTC

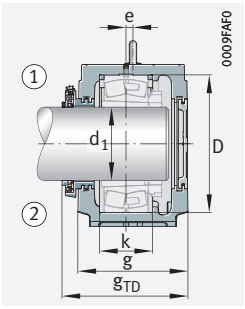

Taconite seal NTC
Cover NDK

Spherical roller bearings and accessories

Bearing	Adapter sleeve	Locating ring		Labyrinth seal			Taconite seal			Cover
			Quantity		g_L mm	g_{LD} mm		g_T mm	g_{TD} mm	
22240..-K	H3140(-HG)	NFR360/21	2	NTS48/180	301	295,5	NTC48/180	380	335	NDK48
22340..-K	H2340(-HG)	NFR420/14	2	NTS56/180	331	325,5	NTC56/180	411	365	NDK56
23040..-K	H3040(-HG)	NFR310/10	4	NTS40[2]	271[3]	265,5[4]	NTC40	326	293	NDK40
230SM180-MA[1]	–	NFR310/10	4	NTS40[2]	271[3]	265,5[4]	NTC40	326	293	NDK40
23140..-K	H3140(-HG)	NFR340/10	2	NTS40[2]	291[3]	285,5[4]	NTC40	354	317	NDK40
231SM180-MA	–	NFR340/10	2	NTS40[2]	291[3]	285,5[4]	NTC40	354	317	NDK40
23240..-K	H2340(-HG)	NFR360/6	2	NTS48/180	301	295,5	NTC48/180	381	335	NDK48
22244..-K	H3144X(-HG)	NFR400/10	4	NTS48/200	321	315,5	NTC48/200	400	355	NDK48
22344..-K	H2344X(-HG)	NFR460/10,5	2	NTS56/200	331	325,5	NTC56/200	411	365	NDK56
23044..-K	H3044X(-HG)	NFR340/10	4	NTS44[2]	291[3]	285,5[4]	NTC44	370	325	NDK44
230SM200-MA	–	NFR340/10	4	NTS44[2]	291[3]	285,5[4]	NTC44	370	325	NDK44
23144..-K	H3144X(-HG)	NFR370/10	2	NTS44[2]	301[3]	295,5[4]	NTC44	380	335	NDK44
231SM200-MA[1]	–	NFR370/10	2	NTS44[2]	301[3]	295,5[4]	NTC44	380	335	NDK44
23244..-K	H2344X(-HG)	NFR400/10	2	NTS48/200	321	315,5	NTC48/200	401	355	NDK48
22248..-K	H3148X(-HG)	NFR440/22	2	NTS52/220	331	325,5	NTC52/220	410	365	NDK52
22348..-K	H2348X(-HG)	NFR500/12,5	2	NTS60/220	361	355,5	NTC60/220	441	395	NDK60
23048..-K	H3048(-HG)	NFR360/12	4	NTS48[2]	301[3]	295,5[4]	NTC48	380	335	NDK48
230SM220-MA[1]	–	NFR360/12	4	NTS48[2]	301[3]	295,5[4]	NTC48	380	335	NDK48
23148..-K	H3148X(-HG)	NFR400/10	2	NTS48[2]	321[3]	315,5[4]	NTC48	400	355	NDK48
231SM220-MA	–	NFR400/10	2	NTS48[2]	321[3]	315,5[4]	NTC48	400	355	NDK48
23248..-K	H2348X(-HG)	NFR440/10	2	NTS52/220	331	325,5	NTC52/220	410	365	NDK52
22252..-K	H3152X(-HG)	NFR480/25,5	2	NTS64/240	361	355,5	NTC64/240	440	395	NDK64
22352..-K	H2352X(-HG)	NFR540/15,5	2	NTS64/240	381	375,5	NTC64/240	460	415	NDK64
23052..-K	H3052X(-HG)	NFR400/22	2	NTS52[2]	321[3]	315,5[4]	NTC52	401	355	NDK52
230SM240-MA	–	NFR400/22	2	NTS52[2]	321[3]	315,5[4]	NTC52	401	355	NDK52
23152..-K	H3152X(-HG)	NFR440/10	2	NTS52[2]	331[3]	325,5[4]	NTC52	410	365	NDK52
231SM240-MA[1]	–	NFR440/10	2	NTS52[2]	331[3]	325,5[4]	NTC52	410	365	NDK52
23252..-K	H2352X(-HG)	NFR480/10	2	NTS64/240	361	355,5	NTC64/240	440	395	NDK64

Plummer block housings

SNS, split
For spherical roller bearings with tapered bore and adapter sleeve, metric shaft

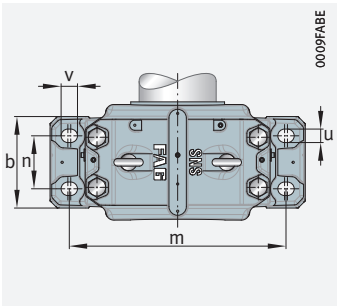

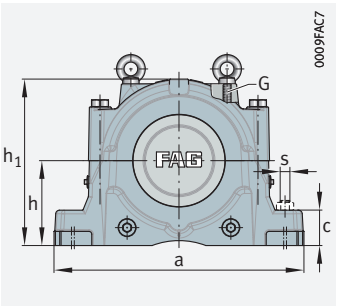

d_1 = 260 – 320 mm

Shaft	Housing																Housing
	Dimensions															Mass	Designation
d_1	h	h_1	g	b	c	a	m	n	v	u	s	D	k	e	G	m	➤1632|3.10
																≈ kg	
260	300	591	350	310	110	830	710	190	50	42	M36	500	180	22	M30	317	**SNS3160-H-D**
	340	675	400	360	120	950	810	220	50	42	M36	580	210	24	M30	461	**SNS3168-H-D**
	260	516	320	280	100	770	650	160	50	42	M36	420	166	13	M24	249	**SNS3056-H-D**
	260	516	320	280	100	770	650	160	50	42	M36	420	166	13	M24	249	**SNS3056-H-D**
	280	550	320	280	105	790	670	160	50	42	M36	460	166	16	M24	264	**SNS3156-H-D**
	280	550	320	280	105	790	670	160	50	42	M36	460	166	16	M24	264	**SNS3156-H-D**
	300	591	350	310	110	830	710	190	50	42	M36	500	196	22	M30	314	**SNS3256-H-D**
	300	591	350	310	110	830	710	190	50	42	M36	500	196	22	M30	314	**SNS3256-H-D**
280	320	631	370	330	115	880	750	200	50	42	M36	540	196	23	M30	368	**SNS3164-H-D**
	280	550	320	280	105	790	670	160	50	42	M36	460	168	16	M24	260	**SNS3060-H-D**
	280	550	320	280	105	790	670	160	50	42	M36	460	168	16	M24	260	**SNS3060-H-D**
	300	591	350	310	110	830	710	190	50	42	M36	500	180	22	M30	317	**SNS3160-H-D**
	300	591	350	310	110	830	710	190	50	42	M36	500	180	22	M30	317	**SNS3160-H-D**
	320	631	370	330	115	880	750	200	50	42	M36	540	212	23	M30	364	**SNS3260-H-D**
300	340	675	400	360	120	950	810	220	50	42	M36	580	190	24	M30	466	**SNS2264-H-D**
	300	591	350	310	110	830	710	190	50	42	M36	480	181	22	M30	332	**SNS3064-H-D**
	300	591	350	310	110	830	710	190	50	42	M36	480	181	22	M30	332	**SNS3064-H-D**
	320	631	370	330	115	880	750	200	50	42	M36	540	196	23	M30	368	**SNS3164-H-D**
	320	631	370	330	115	880	750	200	50	42	M36	540	196	23	M30	368	**SNS3164-H-D**
	340	675	400	360	120	950	810	220	50	42	M36	580	228	24	M30	457	**SNS3264-H-D**
	340	675	400	360	120	950	810	220	50	42	M36	580	228	24	M30	457	**SNS3264-H-D**
320	320	631	370	330	115	880	750	200	50	42	M36	520	197	23	M30	386	**SNS3068-H-D**
	320	631	370	330	115	880	750	200	50	42	M36	520	197	23	M30	386	**SNS3068-H-D**
	340	675	400	360	120	950	810	220	50	42	M36	580	210	24	M30	461	**SNS3168-H-D**
	340	675	400	360	120	950	810	220	50	42	M36	580	210	24	M30	461	**SNS3168-H-D**
	360	715	400	360	120	1 040	870	220	50	42	M36	620	244	30	M36	530	**SNS3268-H-D**

medias *https://www.schaeffler.de/std/1F9A*

① Locating bearing; ② Non-locating bearing

[1] Split bearing in associated housing has restricted usability. Please ask for further information.

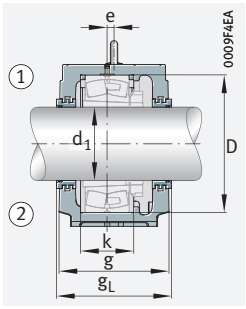

Labyrinth seal NTS

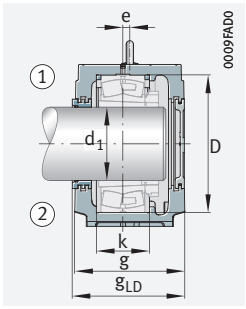

Labyrinth seal NTS
Cover NDK

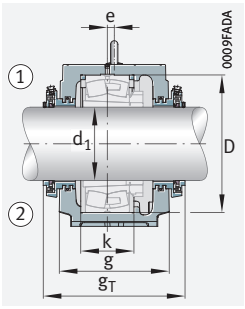

Taconite seal NTC

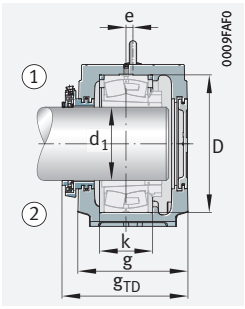

Taconite seal NTC
Cover NDK

Spherical roller bearings and accessories

Bearing	Adapter sleeve	Locating ring		Labyrinth seal			Taconite seal			Cover
			Quantity		g_L mm	g_{LD} mm		g_T mm	g_{TD} mm	
22256..-K	H3156X(-HG)	NFR500/25	2	NTS60/260	361	355,5	NTC60/260	440	395	NDK60
22356..-K	H2356X(-HG)	NFR580/17,5	2	NTS68/260	411	405,5	NTC68/260	490	445	NDK68
23056..-K	H3056(-HG)	NFR420/10	6	NTS56	331	325,5	NTC56	411	365	NDK56
230SM260-MA[1)]	–	NFR420/10	6	NTS56	331	325,5	NTC56	411	365	NDK56
23156..-K	H3156X(-HG)	NFR460/10	2	NTS56	331	325,5	NTC56	410	365	NDK56
231SM260-MA	–	NFR460/10	2	NTS56	331	325,5	NTC56	410	365	NDK56
23256..-K	H2356X(-HG)	NFR500/10	2	NTS60/260	361	355,5	NTC60/260	441	395	NDK60
232SM260-MA[1)]	–	NFR500/10	2	NTS60/260	361	355,5	NTC60/260	441	395	NDK60
22260..-K	H3160(-HG)	NFR540/28	2	NTS64/280	381	375,5	NTC64/280	460	415	NDK64
23060..-K	H3060(-HG)	NFR460/25	2	NTS60	331	325,5	NTC60	411	365	NDK60
230SM280-MA[1)]	–	NFR460/25	2	NTS60	331	325,5	NTC60	411	365	NDK60
23160..-K	H3160(-HG)	NFR500/10	2	NTS60	361	355,5	NTC60	440	395	NDK60
231SM280-MA[1)]	–	NFR500/10	2	NTS60	361	355,5	NTC60	440	395	NDK60
23260..-K	H3260(-HG)	NFR540/10	2	NTS64/280	381	375,5	NTC64/280	461	415	NDK64
22264..-K	H3164-HG	NFR580/20	2	NTS68/300	411	405,5	NTC68/300	490	445	NDK68
23064..-K	H3064-HG	NFR480/10	6	NTS64	361	355,5	NTC64	441	395	NDK64
230SM300-MA[1)]	–	NFR480/10	6	NTS64	361	355,5	NTC64	441	395	NDK64
23164..-K	H3164-HG	NFR540/10	2	NTS64	381	375,5	NTC64	460	415	NDK64
231SM300-MA[1)]	–	NFR540/10	2	NTS64	381	375,5	NTC64	460	415	NDK64
23264..-K	H3264-HG	NFR580/10	2	NTS68/300	411	405,5	NTC68/300	491	445	NDK68
232SM300-MA[1)]	–	NFR580/10	2	NTS68/300	411	405,5	NTC68/300	491	445	NDK68
23068..-K	H3068-HG	NFR520/16	4	NTS68	381	375,5	NTC68	461	415	NDK68
230SM320-MA[1)]	–	NFR520/16	4	NTS68	381	375,5	NTC68	461	415	NDK68
23168..-K	H3168-HG	NFR580/10	2	NTS68	411	405,5	NTC68	490	445	NDK68
231SM320-MA	–	NFR580/10	2	NTS68	411	405,5	NTC68	490	445	NDK68
23268..-K	H3268-HG	NFR620/10	2	NTS76/320	411	405,5	NTC76/320	490	445	NDK76

Plummer block housings

SNS, split
For spherical roller bearings with tapered bore and adapter sleeve, metric shaft

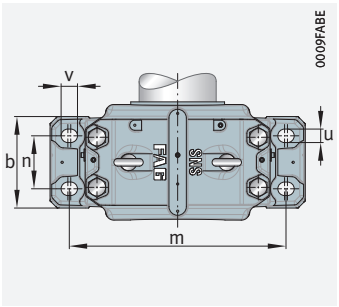

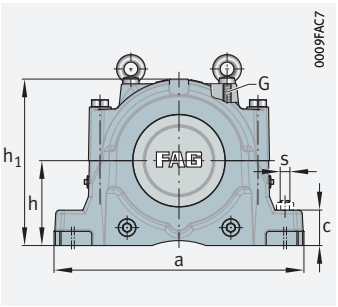

d_1 = 340 – 400 mm

Shaft	Housing																Housing
	Dimensions															Mass	Designation
d_1	h	h_1	g	b	c	a	m	n	v	u	s	D	k	e	G	m	➤*1632|3.10*
																≈ kg	
340	380	755	430	390	125	1 120	950	240	60	48	M42	650	220	30	M42	681	**SNS3180-H-D**
	320	631	370	330	115	880	750	200	50	42	M36	540	198	23	M30	356	**SNS3072-H-D**
	320	631	370	330	115	880	750	200	50	42	M36	540	198	23	M30	356	**SNS3072-H-D**
	350	695	400	360	120	1 000	840	220	50	42	M36	600	212	30	M36	498	**SNS3172-H-D**
	350	695	400	360	120	1 000	840	220	50	42	M36	600	212	30	M36	498	**SNS3172-H-D**
	380	755	430	390	125	1 120	950	240	60	48	M42	650	252	30	M42	675	**SNS3272-H-D**
	380	755	430	390	125	1 120	950	240	60	48	M42	650	252	30	M42	675	**SNS3272-H-D**
360	340	675	400	360	120	950	810	220	50	42	M36	560	180	24	M30	481	**SNS3076-H-D**
	340	675	400	360	120	950	810	220	50	42	M36	560	180	24	M30	481	**SNS3076-H-D**
	360	715	400	360	120	1 040	870	220	50	42	M36	620	214	30	M36	534	**SNS3176-H-D**
	360	715	400	360	120	1 040	870	220	50	42	M36	620	214	30	M36	534	**SNS3176-H-D**
	410	810	460	420	130	1 170	1 000	260	60	48	M42	680	260	35	M42	841	**SNS3276-H-D**
380	350	695	400	360	120	1 000	840	220	50	42	M36	600	192	30	M36	489	**SNS3080-H-D**
	350	695	400	360	120	1 000	840	220	50	42	M36	600	192	30	M36	489	**SNS3080-H-D**
	380	755	430	390	125	1 120	950	240	60	48	M42	650	220	30	M42	681	**SNS3180-H-D**
	380	755	430	390	125	1 120	950	240	60	48	M42	650	220	30	M42	681	**SNS3180-H-D**
	420	835	460	430	135	1 220	1 030	260	60	48	M42	720	276	35	M42	895	**SNS3280-H-D**
400	360	715	400	360	120	1 040	870	220	50	42	M36	620	194	30	M36	527	**SNS3084-H-D**
	360	715	400	360	120	1 040	870	220	50	42	M36	620	194	30	M36	527	**SNS3084-H-D**
	410	810	460	420	130	1 170	1 000	260	60	48	M42	700	244	35	M42	821	**SNS3184-H-D**
	410	810	460	420	130	1 170	1 000	260	60	48	M42	700	244	35	M42	821	**SNS3184-H-D**
	440	880	470	440	145	1 280	1 070	260	60	48	M42	760	292	35	M48	984	**SNS3284-H-D**

medias *https://www.schaeffler.de/std/1F9A*

① Locating bearing; ② Non-locating bearing

[1] Split bearing in associated housing has restricted usability. Please ask for further information.

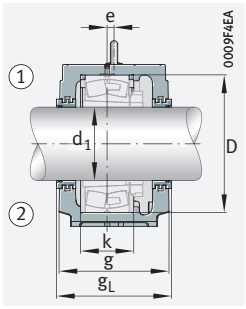

Labyrinth seal NTS

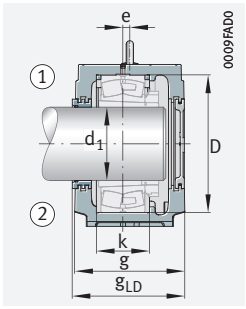

Labyrinth seal NTS
Cover NDK

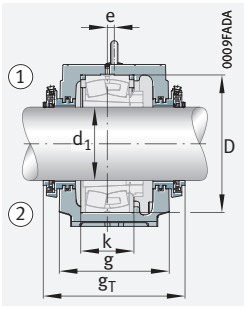

Taconite seal NTC

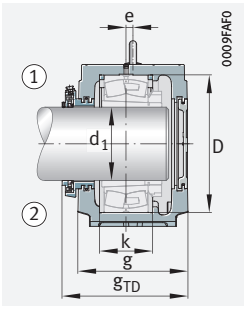

Taconite seal NTC
Cover NDK

Spherical roller bearings and accessories

Bearing	Adapter sleeve	Locating ring		Labyrinth seal			Taconite seal			Cover
			Quantity		g_L mm	g_{LD} mm		g_T mm	g_{TD} mm	
22272..-K	H3172-HG	NFR650/25	2	NTS80/340	441	435,5	NTC80/340	520	475	NDK80
23072..-K	H3072-HG	NFR540/16	4	NTS72	381	375,5	NTC72	461	415	NDK72
230SM340-MA[1)]	–	NFR540/16	4	NTS72	381	375,5	NTC72	461	415	NDK72
23172..-K	H3172-HG	NFR600/10	2	NTS72	411	405,5	NTC72	490	445	NDK72
231SM340-MA[1)]	–	NFR600/10	2	NTS72	411	405,5	NTC72	490	445	NDK72
23272..-K	H3272-HG	NFR650/10	2	NTS80/340	441	435,5	NTC80/340	520	475	NDK80
232SM340-MA[1)]	–	NFR650/10	2	NTS80/340	441	435,5	NTC80/340	520	475	NDK80
23076..-K	H3076-HG	NFR560/22,5	2	NTS76	411	405,5	NTC76	491	445	NDK76
230SM360-MA	–	NFR560/22,5	2	NTS76	411	405,5	NTC76	491	445	NDK76
23176..-K	H3176-HG	NFR620/10	2	NTS76	411	405,5	NTC76	490	445	NDK76
231SM360-MA[1)]	–	NFR620/10	2	NTS76	411	405,5	NTC76	490	445	NDK76
23276..-K	H3276-HG	NFR680/10	2	NTS92/360	471	465,5	NTC92/360	550	505	NDK92
23080..-K	H3080-HG	NFR600/22	2	NTS80	411	405,5	NTC80	491	445	NDK80
230SM380-MA[1)]	–	NFR600/22	2	NTS80	411	405,5	NTC80	491	445	NDK80
23180..-K	H3180-HG	NFR650/10	2	NTS80	441	435,5	NTC80	520	475	NDK80
231SM380-MA[1)]	–	NFR650/10	2	NTS80	441	435,5	NTC80	520	475	NDK80
23280..-K	H3280-HG	NFR720/10	2	NTS88/380	471	465,5	NTC88/380	550	505	NDK88
23084..-K	H3084X-HG	NFR620/22	2	NTS84	411	405,5	NTC84	491	445	NDK84
230SM400-MA[1)]	–	NFR620/22	2	NTS84	411	405,5	NTC84	491	445	NDK84
23184..-K	H3184-HG	NFR700/10	2	NTS84	471	465,5	NTC84	550	505	NDK84
231SM400-MA	–	NFR700/10	2	NTS84	471	465,5	NTC84	550	505	NDK84
23284..-K	H3284-HG	NFR760/10	2	NTS92/400	481	475,5	NTC92/400	560	515	NDK92

Plummer block housings

SNS, split
For spherical roller bearings with tapered bore and adapter sleeve, metric shaft

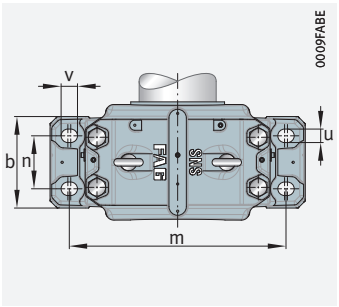

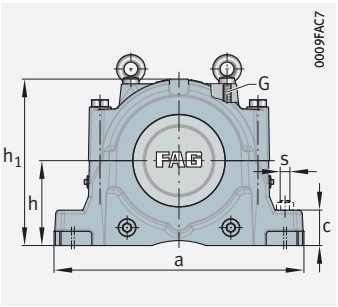

d_1 = 410 – 500 mm

Shaft	Housing																Housing
	Dimensions															Mass	Designation
d_1	h	h_1	g	b	c	a	m	n	v	u	s	D	k	e	G	m	➤*1632|3.10*
																≈ kg	
410	380	755	430	390	125	1 120	950	240	60	48	M42	650	200	30	M42	672	**SNS3088-H-D**
	380	755	430	390	125	1 120	950	240	60	48	M42	650	200	30	M42	672	**SNS3088-H-D**
	420	835	460	430	135	1 220	1 030	260	60	48	M42	720	246	35	M42	895	**SNS3188-H-D**
	420	835	460	430	135	1 220	1 030	260	60	48	M42	720	246	35	M42	895	**SNS3188-H-D**
	460	920	470	440	155	1 330	1 110	260	70	56	M48	790	300	35	M48	1 100	**SNS3288-H-D**
430	410	810	460	420	130	1 170	1 000	260	60	48	M42	680	224	35	M42	849	**SNS3092-H-D**
	440	880	470	440	145	1 280	1 070	260	60	48	M42	760	260	35	M48	993	**SNS3192-H-D**
450	410	810	460	420	130	1 170	1 000	260	60	48	M42	700	224	35	M42	806	**SNS3096-H-D**
	460	920	470	440	155	1 330	1 110	260	70	56	M48	790	268	35	M48	1 100	**SNS3196-H-D**
470	420	835	460	430	135	1 220	1 030	260	60	48	M42	720	226	35	M42	895	**SNS30/500-H-D**
500	460	920	470	440	155	1 330	1 110	260	70	56	M48	780	248	35	M48	1 100	**SNS30/530-H-D**

medias *https://www.schaeffler.de/std/1F9A*

① Locating bearing; ② Non-locating bearing

[1] Split bearing in associated housing has restricted usability. Please ask for further information.

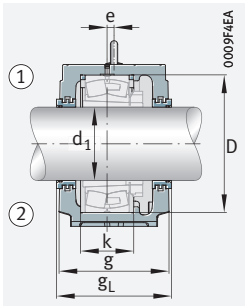

Labyrinth seal NTS

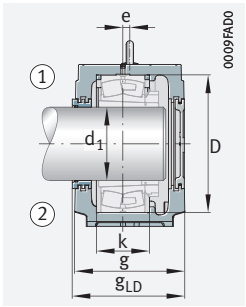

Labyrinth seal NTS
Cover NDK

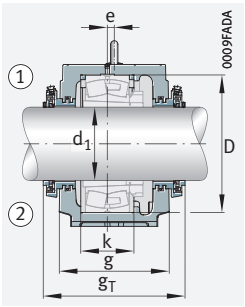

Taconite seal NTC

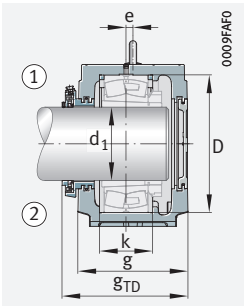

Taconite seal NTC
Cover NDK

Spherical roller bearings and accessories

Bearing	Adapter sleeve	Locating ring		Labyrinth seal			Taconite seal			Cover
			Quantity		g_L mm	g_{LD} mm		g_T mm	g_{TD} mm	
23088..-K	H3088-HG	NFR650/21,5	2	NTS88	441	435,5	NTC88	521	475	NDK88
230SM410-MA	–	NFR650/21,5	2	NTS88	441	435,5	NTC88	521	475	NDK88
23188..-K	H3188-HG	NFR720/10	2	NTS88	471	465,5	NTC88	550	505	NDK88
231SM410-MA[1)]	–	NFR720/10	2	NTS88	471	465,5	NTC88	550	505	NDK88
23288..-K	H3288-HG	NFR790/10	2	NTS96/410	481	475,5	NTC96/410	560	515	NDK96
23092..-K	H3092-HG	NFR680/30,5	2	NTS92	471	465,5	NTC92	551	505	NDK92
23192..-K	H3192-HG	NFR760/10	2	NTS92	481	475,5	NTC92	560	515	NDK92
23096..-K	H3096-HG	NFR700/29,5	2	NTS96	471	465,5	NTC96	551	505	NDK96
23196..-K	H3196-HG	NFR790/10	2	NTS96	481	475,5	NTC96	560	515	NDK96
230/500..-K	H30/500-HG	NFR720/29,5	2	NTS500	471	465,5	NTC500	551	505	NDK500
230/530..-K	H30/530-HG	NFR780/31,5	2	NTS530	481	475,5	NTC530	561	515	NDK530

Plummer block housings

SNS, split
For spherical roller bearings with cylindrical bore, metric shaft

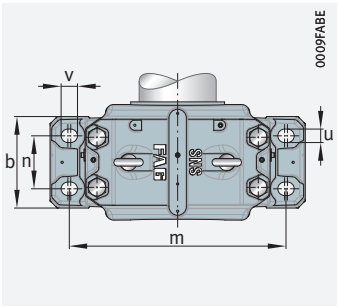

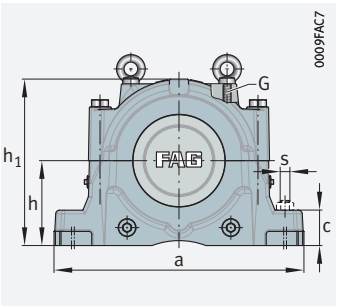

d = 130 – 200 mm

Shaft		Housing																Housing
		Dimensions															Mass	Designation
d	d_2	h	h_1	g	b	c	a	m	n	v	u	s	D	k	e	G	m	➤*1632|3.10*
																	≈ kg	
130	150	170	333	230	180	70	510	430	100	34	28	M24	280	108	14	M16	75	**SNS3134-H-D**
140	160	180	353	240	190	75	530	450	110	34	28	M24	300	116	15	M16	83	**SNS3136-H-D**
150	170	190	375	260	210	80	560	480	120	34	28	M24	320	124	10	M20	102	**SNS3138-H-D**
160	180	180	353	240	190	75	530	450	110	34	28	M24	290	115	15	M16	86	**SNS3038-H-D**
	180	210	411	280	230	85	610	510	130	42	35	M30	340	132	10	M20	133	**SNS3140-H-D**
	180	180	353	240	190	75	530	450	110	34	28	M24	290	115	15	M16	86	**SNS3038-H-D**
170	190	190	375	260	210	80	560	480	120	34	28	M24	310	122	10	M20	105	**SNS3040-H-D**
	190	220	434	290	240	90	640	540	140	42	35	M30	360	140	12	M20	148	**SNS3048-H-D**
	180	170	333	230	180	70	510	430	100	34	28	M24	280	108	14	M16	71	**SNS3134-Z-D**
	190	190	375	260	210	80	560	480	120	34	28	M24	310	122	10	M20	105	**SNS3234-Z-D**
180	200	190	375	260	210	80	560	480	120	34	28	M24	320	124	10	M20	97	**SNS3138-Z-D**
	200	170	333	230	180	70	510	430	100	34	28	M24	280	108	14	M16	67	**SNS3036-Z-D**
	200	180	353	240	190	75	530	450	110	34	28	M24	300	116	15	M16	77	**SNS3136-Z-D**
	200	190	375	260	210	80	560	480	120	34	28	M24	320	124	10	M20	97	**SNS3236-Z-D**
	200	170	333	230	180	70	510	430	100	34	28	M24	280	108	14	M16	67	**SNS3036-Z-D**
190	210	210	411	280	230	85	610	510	130	42	35	M30	340	132	10	M20	125	**SNS3140-Z-D**
	210	240	474	310	260	95	700	600	150	42	35	M30	400	148	12	M24	184	**SNS3148-H-D**
	200	180	353	240	190	75	530	450	110	34	28	M24	290	115	15	M16	81	**SNS3038-Z-D**
	200	190	375	260	210	80	560	480	120	34	28	M24	320	124	10	M20	97	**SNS3138-Z-D**
	210	210	411	280	230	85	610	510	130	42	35	M30	340	132	10	M20	125	**SNS3238-Z-D**
	200	180	353	240	190	75	530	450	110	34	28	M24	290	115	15	M16	81	**SNS3038-Z-D**
200	220	220	434	290	240	90	640	540	140	42	35	M30	360	140	12	M20	148	**SNS3048-H-D**
	220	190	375	260	210	80	560	480	120	34	28	M24	310	122	10	M20	97	**SNS3040-Z-D**
	220	210	411	280	230	85	610	510	130	42	35	M30	340	132	10	M20	125	**SNS3140-Z-D**
	220	220	434	290	240	90	640	540	140	42	35	M30	360	140	12	M20	148	**SNS3240-Z-D**
	220	190	375	260	210	80	560	480	120	34	28	M24	310	122	10	M20	97	**SNS3040-Z-D**

medias *https://www.schaeffler.de/std/1F9A*

① Locating bearing; ② Non-locating bearing

1) Alternatively also available with split labyrinth seal NTSG.

2) With NTSG: width g_L increased by 16 mm.

3) With NTSG: width g_{LD} increased by 8 mm.

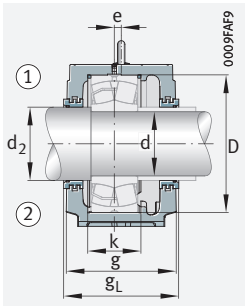

Labyrinth seal NTS

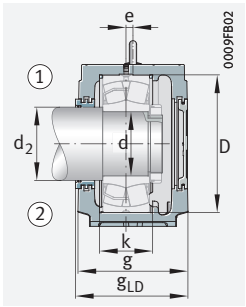

Labyrinth seal NTS
Cover NDK

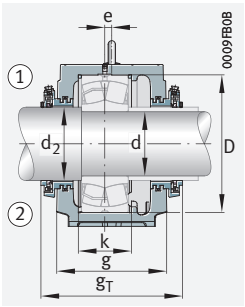

Taconite seal NTC

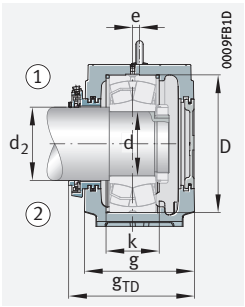

Taconite seal NTC
Cover NDK

Spherical roller bearings and accessories

Bearing	Locating ring		Labyrinth seal			Taconite seal			Cover
		Quantity		g_L mm	g_{LD} mm		g_T mm	g_{TD} mm	
22326	NFR280/7,5	2	NTS34[1]	241[2]	235,5[3]	NTC34	299	264,5	NDK34
22328	NFR300/7	2	NTS36[1]	251[2]	245,5[3]	NTC36	314	277	NDK36
22330	NFR320/8	2	NTS38[1]	271[2]	265,5[3]	NTC38	334	297	NDK38
22232	NFR290/17,5	2	NTS38/180	251	245,5	NTC38/180	314	277	NDK38
22332	NFR340/9	2	NTS40[1]	291[2]	285,5[3]	NTC40	354	317	NDK40
23232	NFR290/5,5	2	NTS38/180	251	245,5	NTC38/180	314	277	NDK38
22234	NFR310/18	2	NTS40/190	271	265,5	NTC40/190	334	297	NDK40
22334	NFR360/10	2	NTS48/190	301	295,5	NTC48/190	380	335	NDK48
23134	NFR280/10	2	NTS40[1]	241[2]	235,5[3]	NTC40	298	264	NDK40
23234	NFR310/6	2	NTS40/190	271	265,5	NTC40/190	326	293	NDK40
22236	NFR320/19	2	NTS44[1]	271[2]	265,5[3]	NTC44	350	305	NDK44
23036	NFR280/17	2	NTS44[1]	241[2]	235,5[3]	NTC44	320	275	NDK44
23136	NFR300/10	2	NTS44[1]	251[2]	245,5[3]	NTC44	330	285	NDK44
23236	NFR320/6	2	NTS44[1]	271[2]	265,5[3]	NTC44	350	305	NDK44
24036	NFR280/4	2	NTS44[1]	241[2]	235,5[3]	NTC44	320	275	NDK44
22238	NFR340/10	4	NTS48/210	291	285,5	NTC48/210	372	302,5	NDK48
22338	NFR400/8	2	NTS48/210	321	315,5	NTC48/210	402	329,5	NDK48
23038	NFR290/10	4	NTS44[1]	251[2]	245,5[3]	NTC44	330	285	NDK44
23138	NFR320/10	2	NTS44[1]	271[2]	265,5[3]	NTC44	350	305	NDK44
23238	NFR340/6	2	NTS48/210	291	285,5	NTC48/210	372	302,5	NDK48
24038	NFR290/7,5	2	NTS44[1]	251[2]	245,5[3]	NTC44	330	285	NDK44
22240	NFR360/21	2	NTS48[1]	301[2]	295,5[3]	NTC48	380	335	NDK48
23040	NFR310/10	4	NTS48[1]	271[2]	265,5[3]	NTC48	350	305	NDK48
23140	NFR340/10	2	NTS48[1]	291[2]	285,5[3]	NTC48	372	302,5	NDK48
23240	NFR360/6	2	NTS48[1]	301[2]	295,5[3]	NTC48	380	335	NDK48
24040	NFR310/6,5	2	NTS48[1]	271[2]	265,5[3]	NTC48	350	305	NDK48

Plummer block housings

SNS, split
For spherical roller bearings with cylindrical bore, metric shaft

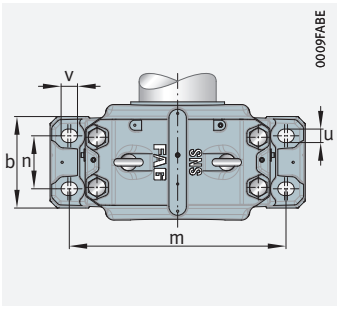

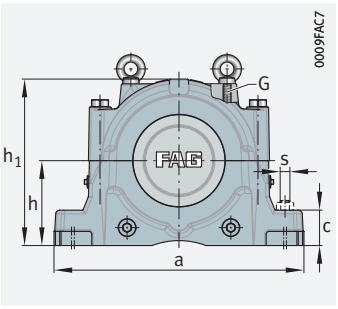

d = 220 – 280 mm

Shaft		Housing																Housing
		Dimensions															Mass	Designation
																		➤*1632|3.10*
d	d_2	h	h_1	g	b	c	a	m	n	v	u	s	D	k	e	G	m	
																	≈ kg	
220	240	240	474	310	260	95	700	600	150	42	35	M30	400	148	12	M24	176	**SNS3148-Z-D**
	240	280	550	320	280	105	790	670	160	50	42	M36	460	166	16	M24	264	**SNS3156-H-D**
	240	210	411	280	230	85	610	510	130	42	35	M30	340	130	10	M20	121	**SNS3044-Z-D**
	240	220	434	290	240	90	640	540	140	42	35	M30	370	140	12	M20	138	**SNS3144-Z-D**
	240	240	474	310	260	95	700	600	150	42	35	M30	400	164	12	M24	174	**SNS3244-Z-D**
	240	210	411	280	230	85	610	510	130	42	35	M30	340	130	10	M20	121	**SNS3044-Z-D**
240	260	260	516	320	280	100	770	650	160	50	42	M36	440	164	13	M24	229	**SNS3152-Z-D**
	260	300	591	350	310	110	830	710	190	50	42	M36	500	180	22	M30	317	**SNS3160-H-D**
	260	220	434	290	240	90	640	540	140	42	35	M30	360	140	12	M20	140	**SNS3048-Z-D**
	260	240	474	310	260	95	700	600	150	42	35	M30	400	148	12	M24	176	**SNS3148-Z-D**
	260	260	516	320	280	100	770	650	160	50	42	M36	440	180	13	M24	226	**SNS3248-Z-D**
	260	220	434	290	240	90	640	540	140	42	35	M30	360	140	12	M20	140	**SNS3048-Z-D**
260	280	300	591	350	310	110	830	710	190	50	42	M36	480	181	22	M30	332	**SNS3064-H-D**
	290	320	631	370	330	115	880	750	200	50	42	M36	540	196	23	M30	368	**SNS3164-H-D**
	280	240	474	310	260	95	700	600	150	42	35	M30	400	148	12	M24	171	**SNS3052-Z-D**
	280	260	516	320	280	100	770	650	160	50	42	M36	440	164	13	M24	229	**SNS3152-Z-D**
	280	300	591	350	310	110	830	710	190	50	42	M36	480	194	22	M30	331	**SNS3252-Z-D**
	280	240	474	310	260	95	700	600	150	42	35	M30	400	148	12	M24	171	**SNS3052-Z-D**
280	300	300	591	350	310	110	830	710	190	50	42	M36	500	180	22	M30	307	**SNS3160-Z-D**
	310	340	675	400	360	120	950	810	220	50	42	M36	580	210	24	M30	461	**SNS3168-H-D**
	300	260	516	320	280	100	770	650	160	50	42	M36	420	166	13	M24	240	**SNS3056-Z-D**
	300	280	550	320	280	105	790	670	160	50	42	M36	460	166	16	M24	255	**SNS3156-Z-D**
	300	300	591	350	310	110	830	710	190	50	42	M36	500	196	22	300	591	**SNS3256-Z-D**
	300	260	516	320	280	100	770	650	160	50	42	M36	420	166	13	M24	240	**SNS3056-Z-D**

medias *https://www.schaeffler.de/std/1F9A*

① Locating bearing; ② Non-locating bearing

1) Alternatively also available with split labyrinth seal NTSG.

2) With NTSG: width g_L increased by 16 mm.

3) With NTSG: width g_{LD} increased by 8 mm.

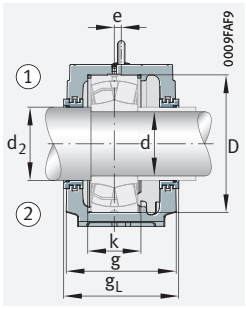

Labyrinth seal NTS

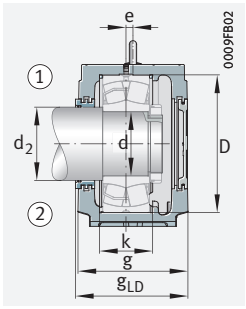

Labyrinth seal NTS
Cover NDK

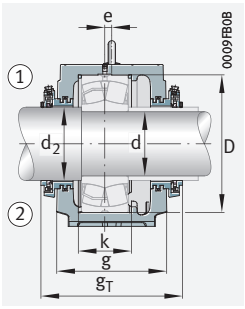

Taconite seal NTC

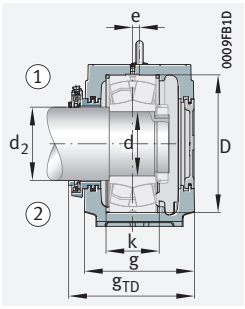

Taconite seal NTC
Cover NDK

Spherical roller bearings and accessories

Bearing	Locating ring		Labyrinth seal			Taconite seal			Cover
		Quantity		g_L mm	g_{LD} mm		g_T mm	g_{TD} mm	
22244	NFR400/10	4	NTS56/240	321	315,5	NTC56/240	400	355	NDK56
22344	NFR460/10,5	2	NTS56/240	331	325,5	NTC56/240	410	365	NDK56
23044	NFR340/10	4	NTS52[1)]	291[2)]	285,5[3)]	NTC52	370	325	NDK52
23144	NFR370/10	2	NTS52[1)]	301[2)]	295,5[3)]	NTC52	380	335	NDK52
23244	NFR400/10	2	NTS56/240	321	315,5	NTC56/240	400	355	NDK56
24044	NFR340/6	2	NTS52[1)]	291[2)]	285,5[3)]	NTC52	370	325	NDK52
22248	NFR440/22	2	NTS60/260	331	325,5	NTC60/260	410	365	NDK60
22348	NFR500/12,5	2	NTS60/260	361	355,5	NTC60/260	440	395	NDK60
23048	NFR360/12	4	NTS56	301	295,5	NTC56	380	335	NDK56
23148	NFR400/10	2	NTS56	321	315,5	NTC56	400	355	NDK56
23248	NFR440/10	2	NTS60/260	331	325,5	NTC60/260	410	365	NDK60
24048	NFR360/11	2	NTS56	301	295,5	NTC56	380	335	NDK56
22252	NFR480/25,5	2	NTS64/280	361	355,5	NTC64/280	440	395	NDK64
22352	NFR540/15,5	2	NTS64/290	381	375,5	NTC64/290	460	415	NDK64
23052	NFR400/22	2	NTS60	321	315,5	NTC60	400	355	NDK60
23152	NFR440/10	2	NTS60	331	325,5	NTC60	410	365	NDK60
23252	NFR480/10	2	NTS64/280	361	355,5	NTC64/280	440	395	NDK64
24052	NFR400/4	2	NTS60	321	315,5	NTC60	400	355	NDK60
22256	NFR500/25	2	NTS68/300	361	355,5	NTC68/300	440	395	NDK68
22356	NFR580/17,5	2	NTS68/310	411	405,5	NTC68/310	490	445	NDK68
23056	NFR420/10	6	NTS64	331	325,5	NTC64	410	365	NDK64
23156	NFR460/10	2	NTS64	331	325,5	NTC64	410	365	NDK64
23256	NFR500/10	2	NTS68/300	361	355,5	NTC68/300	440	395	NDK68
24056	NFR420/13	2	NTS64	331	325,5	NTC64	410	365	NDK64

Plummer block housings

SNS, split
For spherical roller bearings with cylindrical bore, metric shaft

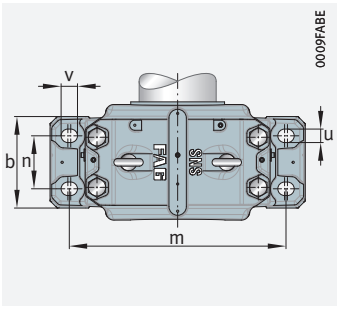

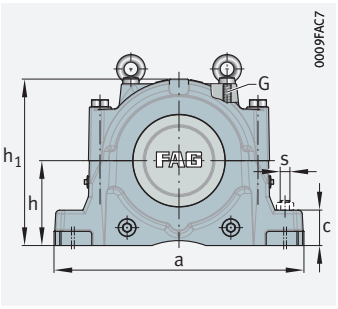

d = 300 – 380 mm

Shaft		Housing																Housing
		Dimensions															Mass	Designation
d	d_2	h	h_1	g	b	c	a	m	n	v	u	s	D	k	e	G	m	➤*1632|3.10*
																	≈ kg	
300	320	320	631	370	330	115	880	750	200	50	42	M36	540	196	23	M30	357	**SNS3164-Z-D**
	320	280	550	320	280	105	790	670	160	50	42	M36	460	168	16	M24	249	**SNS3060-Z-D**
	320	300	591	350	310	110	830	710	190	50	42	M36	500	180	22	M30	307	**SNS3160-Z-D**
	320	320	631	370	330	115	880	750	200	50	42	M36	540	212	23	M30	353	**SNS3260-Z-D**
	320	280	550	320	280	105	790	670	160	50	42	M36	460	168	16	M24	249	**SNS3060-Z-D**
320	340	340	675	400	360	120	950	810	220	50	42	M36	580	190	24	M30	455	**SNS2264-Z-D**
	340	300	591	350	310	110	830	710	190	50	42	M36	480	181	22	M30	321	**SNS3064-Z-D**
	340	320	631	370	330	115	880	750	200	50	42	M36	540	196	23	M30	357	**SNS3164-Z-D**
	340	340	675	400	360	120	950	810	220	50	42	M36	580	228	24	M30	445	**SNS3264-Z-D**
	340	300	591	350	310	110	830	710	190	50	42	M36	480	181	22	M30	321	**SNS3064-Z-D**
340	360	320	631	370	330	115	880	750	200	50	42	M36	520	197	23	M30	374	**SNS3068-Z-D**
	360	340	675	400	360	120	950	810	220	50	42	M36	580	210	24	M30	450	**SNS3168-Z-D**
	370	360	715	400	360	120	1 040	870	220	50	42	M36	620	244	30	M36	530	**SNS3268-Z-D**
	360	320	631	370	330	115	880	750	200	50	42	M36	520	197	23	M30	374	**SNS3068-Z-D**
360	390	380	755	430	390	125	1 120	950	240	60	48	M42	650	220	30	M42	681	**SNS3180-H-D**
	380	320	631	370	330	115	880	750	200	50	42	M36	540	198	23	M30	344	**SNS3072-Z-D**
	380	350	695	400	360	120	1 000	840	220	50	42	M36	600	212	30	M36	486	**SNS3172-Z-D**
	390	380	755	430	390	125	1 120	950	240	60	48	M42	650	252	30	M42	675	**SNS3272-Z-D**
	380	320	631	370	330	115	880	750	200	50	42	M36	540	198	23	M30	344	**SNS3072-Z-D**
380	400	340	675	400	360	120	950	810	220	50	42	M36	560	180	24	M30	467	**SNS3076-Z-D**
	400	360	715	400	360	120	1 040	870	220	50	42	M36	620	214	30	M36	521	**SNS3176-Z-D**
	410	410	810	460	420	130	1 170	1 000	260	60	48	M42	680	260	35	M42	841	**SNS3276-Z-D**
	400	340	675	400	360	120	950	810	220	50	42	M36	560	200	24	M30	465	**SNS4076-Z-D**

medias *https://www.schaeffler.de/std/1F9A*

① Locating bearing; ② Non-locating bearing

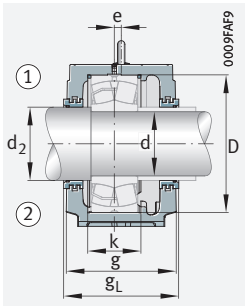

Labyrinth seal NTS

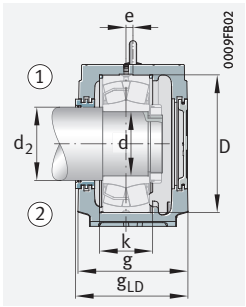

Labyrinth seal NTS
Cover NDK

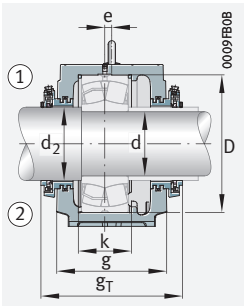

Taconite seal NTC

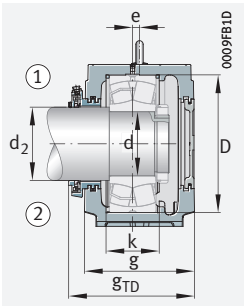

Taconite seal NTC
Cover NDK

Spherical roller bearings and accessories

Bearing	Locating ring		Labyrinth seal			Taconite seal			Cover
		Quantity		g_L mm	g_{LD} mm		g_T mm	g_{TD} mm	
22260	NFR540/28	2	NTS72/320	381	375,5	NTC72/320	460	415	NDK72
23060	NFR460/25	2	NTS68	331	325,5	NTC68	410	365	NDK68
23160	NFR500/10	2	NTS68	361	355,5	NTC68	440	395	NDK68
23260	NFR540/10	2	NTS72/320	381	375,5	NTC72/320	460	415	NDK72
24060	NFR460/4	2	NTS68	331	325,5	NTC68	410	365	NDK68
22264	NFR580/20	2	NTS76/340	411	405,5	NTC76/340	490	445	NDK76
23064	NFR480/10	6	NTS72	361	355,5	NTC72	440	395	NDK72
23164	NFR540/10	2	NTS72	381	375,5	NTC72	460	415	NDK72
23264	NFR580/10	2	NTS76/340	411	405,5	NTC76/340	490	445	NDK76
24064	NFR480/10,5	2	NTS72	361	355,5	NTC72	440	395	NDK72
23068	NFR520/16	4	NTS76	381	375,5	NTC76	460	415	NDK76
23168	NFR580/10	2	NTS76	411	405,5	NTC76	490	445	NDK76
23268	NFR620/10	2	NTS76/370	411	405,5	NTC76/370	490	445	NDK76
24068	NFR520/8,5	2	NTS76	381	375,5	NTC76	460	415	NDK76
22272	NFR650/25	2	NTS80/390	441	435,5	NTC80/390	520	475	NDK80
23072	NFR540/16	4	NTS80	381	375,5	NTC80	460	415	NDK80
23172	NFR600/10	2	NTS80	411	405,5	NTC80	490	445	NDK80
23272	NFR650/10	2	NTS80/390	441	435,5	NTC80/390	520	475	NDK80
24072	NFR540/9	2	NTS80	381	375,5	NTC80	460	415	NDK80
23076	NFR560/22,5	2	NTS84	411	405,5	NTC84	490	445	NDK84
23176	NFR620/10	2	NTS84	411	405,5	NTC84	490	445	NDK84
23276	NFR680/10	2	NTS92/410	471	465,5	NTC92/410	550	505	NDK92
24076	NFR560/10	2	NTS84	411	405,5	NTC84	475	438	NDK84

Plummer block housings

SNS, split
For spherical roller bearings with cylindrical bore, metric shaft

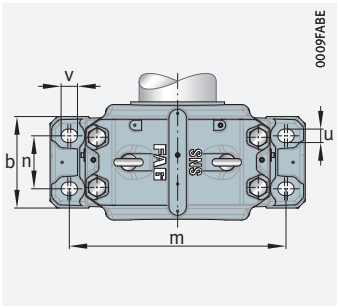

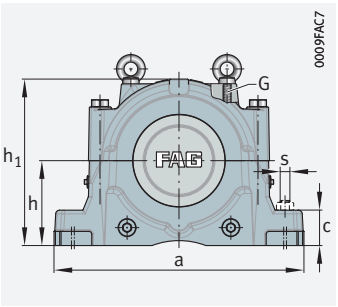

d = 400 – 530 mm

Shaft		Housing																Housing
		Dimensions															Mass	Designation
																		➤ *1632|3.10*
d	d_2	h	h_1	g	b	c	a	m	n	v	u	s	D	k	e	G	m ≈ kg	
400	430	350	695	400	360	120	1 000	840	220	50	42	M36	600	192	30	M36	468	**SNS3080-Z-D**
	430	380	755	430	390	125	1 120	950	240	60	48	M42	650	220	30	M42	660	**SNS3180-Z-D**
	430	420	835	460	430	135	1 220	1 030	260	60	48	M42	720	276	35	M42	895	**SNS3280-Z-D**
	430	350	695	400	360	120	1 000	840	220	50	42	M36	600	220	30	M36	463	**SNS4080-Z-D**
420	450	360	715	400	360	120	1 040	870	220	50	42	M36	620	194	30	M36	505	**SNS3084-Z-D**
	450	410	810	460	420	130	1 170	1 000	260	60	48	M42	700	244	35	M42	799	**SNS3184-Z-D**
	460	440	880	470	440	145	1 280	1 070	260	60	48	M42	760	292	35	M48	956	**SNS3284-Z-D**
	450	360	715	400	360	120	1 040	870	220	50	42	M36	620	220	30	M36	499	**SNS4084-Z-D**
440	470	380	755	430	390	125	1 120	950	240	60	48	M42	650	200	30	M42	649	**SNS3088-Z-D**
	470	420	835	460	430	135	1 220	1 030	260	60	48	M42	720	246	35	M42	895	**SNS3188-Z-D**
	480	460	920	470	440	155	1 330	1 110	260	70	56	M48	790	300	35	M48	1 100	**SNS3288-Z-D**
	470	380	755	430	390	125	1 120	950	240	60	48	M42	650	232	30	M42	642	**SNS4088-Z-D**
460	500	410	810	460	420	130	1 170	1 000	260	60	48	M42	680	224	35	M42	821	**SNS3092-Z-D**
	500	440	880	470	440	145	1 280	1 070	260	60	48	M42	760	260	35	M48	966	**SNS3192-Z-D**
	500	410	810	460	420	130	1 170	1 000	260	60	48	M42	680	238	35	M42	818	**SNS4092-Z-D**
480	510	410	810	460	420	130	1 170	1 000	260	60	48	M42	700	224	35	M42	786	**SNS3096-Z-D**
	520	460	920	470	440	155	1 330	1 110	260	70	56	M48	790	268	35	M48	1 100	**SNS3196-Z-D**
	510	410	810	460	420	130	1 170	1 000	260	60	48	M42	700	238	35	M42	780	**SNS4096-Z-D**
500	530	420	835	460	430	135	1 220	1 030	260	60	48	M42	720	226	35	M42	895	**SNS30/500-Z-D**
	530	420	835	460	430	135	1 220	1 030	260	60	48	M42	720	238	35	M42	895	**SNS40/500-Z-D**
530	560	460	920	470	440	155	1 330	1 110	260	70	56	M48	780	248	35	M48	1 100	**SNS30/530-Z-D**
	560	460	920	470	440	155	1 330	1 110	260	70	56	M48	780	270	35	M48	1 100	**SNS40/530-Z-D**

medias *https://www.schaeffler.de/std/1F9A*

① Locating bearing; ② Non-locating bearing

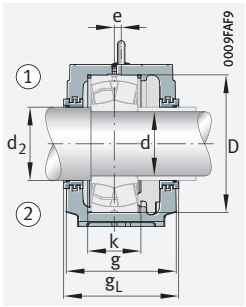

Labyrinth seal NTS

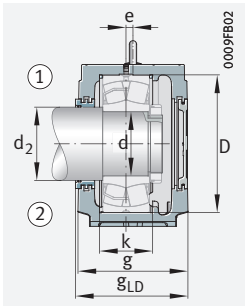

Labyrinth seal NTS
Cover NDK

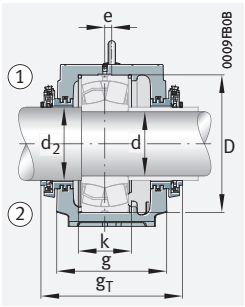

Taconite seal NTC

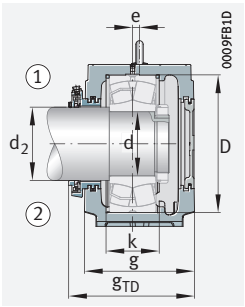

Taconite seal NTC
Cover NDK

Spherical roller bearings and accessories

Bearing	Locating ring		Labyrinth seal			Taconite seal			Cover
		Quantity		g_L mm	g_{LD} mm		g_T mm	g_{TD} mm	
23080	NFR600/22	2	NTS92	411	405,5	NTC92	490	445	NDK92
23180	NFR650/10	2	NTS92	441	435,5	NTC92	520	475	NDK92
23280	NFR720/10	2	NTS500/430	471	465,5	NTC500/430	550	505	NDK500
24080	NFR600/10	2	NTS92	411	405,5	NTC92	475	438	NDK92
23084	NFR620/22	2	NTS96	411	405,5	NTC96	490	445	NDK96
23184	NFR700/10	2	NTS96	471	465,5	NTC96	550	505	NDK96
23284	NFR760/10	2	NTS530/460	481	475,5	NTC530/460	560	515	NDK530
24084	NFR620/10	2	NTS96	411	405,5	NTC96	475	438	NDK96
23088	NFR650/21,5	2	NTS500	441	435,5	NTC500	520	475	NDK500
23188	NFR720/10	2	NTS500	471	465,5	NTC500	550	505	NDK500
23288	NFR790/10	2	NTS560/480	481	475,5	NTC560/480	560	515	NDK560
24088	NFR650/10	2	NTS500	441	435,5	NTC500	505	468	NDK500
23092	NFR680/30,5	2	NTS530	471	465,5	NTC530	550	505	NDK530
23192	NFR760/10	2	NTS530	481	475,5	NTC530	560	515	NDK530
24092	NFR680/10	2	NTS530	471	465,5	NTC530	535	498	NDK530
23096	NFR700/29,5	2	NTS530/510	471	465,5	NTC530/510	550	505	NDK530
23196	NFR790/10	2	NTS560/520	481	475,5	NTC560/520	560	515	NDK560
24096	NFR700/10	2	NTS530/510	471	465,5	NTC530/510	535	498	NDK530
230/500	NFR720/29,5	2	NTS560	471	465,5	NTC560	550	505	NDK560
240/500	NFR720/10	2	NTS560	471	465,5	NTC560	535	498	NDK560
230/530	NFR780/31,5	2	NTS600	481	475,5	NTC600	560	515	NDK600
240/530	NFR780/10	2	NTS600	481	475,5	NTC600	545	508	NDK600

4 Other bearing housings

4.1 Split plummer block housings S30

Housings for wide range of applications

Split plummer block housings S30 can be used for various applications, such as sintering and pelletising equipment as well as paper processing machinery ➤*1656*|*1*.

1
Split plummer block housings S30

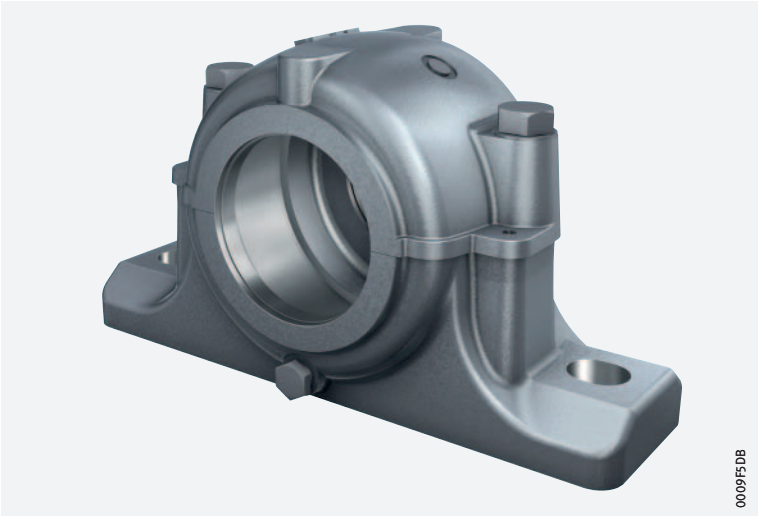

Suitable bearings

Shaft diameters from 110 mm to 150 mm

The dimensions of split plummer block housings S30 are matched to spherical roller bearings 230 ➤*1656*|*1*. The range of shaft diameters is between 110 mm and 150 mm.

1
Bearing type and sizes

Bearing type	Size
Spherical roller bearings ■ with tapered bore and adapter sleeve	23024..-K to 23034..-K
■ with cylindrical bore	23024 to 23034

Split spherical roller bearings

Unsplit spherical roller bearings with an adapter sleeve can be replaced by split spherical roller bearings. This gives a considerable reduction in the work associated with bearing replacement in numerous applications. In order to ensure selection of the correct combination of housing and bearing when using split bearings, please contact Schaeffler.

The range of split spherical roller bearings is described in detail in a separate publication TPI 250.

Materials

Flake graphite cast iron as standard

Material for housing body:
- flake graphite cast iron (standard)
- spheroidal graphite cast iron
- cast steel

Locating and non-locating bearings

Locating bearing arrangement by means of locating ring

The bearing seats in the housing are machined such that the bearings are movable in the housing and can thus function as non-locating bearings. Locating bearing arrangements can be achieved by the insertion of a locating ring FRM adjacent to the bearing outer ring.

Lubrication

Grease lubrication

Suitable lubrication method:

- grease lubrication

Sealing

Felt seals

Plummer block housings S30 are sealed by means of felt seals ➤*1657*| *2*. The felt seals allow shaft misalignment of up to 0,5° in both directions and are suitable for grease lubrication.

The oil-soaked felt strips must be inserted in the associated slots in the housing. In the case of a housing closed on one side, 2 felt strips are inserted, while 4 felt strips are necessary in the case of a continuous shaft.

2
Felt seal for plummer block housing S30

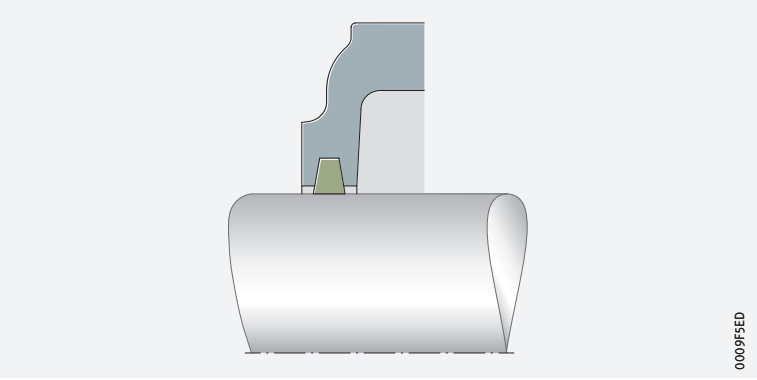

Covers DK made from polyamide

In the case of a housing closed on one side, a cover DK is inserted in the slots can be inserted instead of the felt strips on one side of the housing. Covers DK are made from polyamide.

Scope of delivery

When ordering split plummer block housings S30, the housing designation only describes the housing body. The felt strips for sealing the housing are included in the scope of delivery, while the cover and locating rings must be ordered separately. The rolling bearing and, if necessary, the adapter sleeve must also be ordered separately.

Further information

Detailed information on split plummer block housings S30:
Bearing Housings GK 1.

4.2 Split plummer block housings SAF

Housing dimensions for inch size shaft centre heights

Split plummer block housings SAF and the associated bearings form bearing arrangement units that can be matched, through the appropriate selection of accessories, to a wide range of applications. The housings are specifically designed for inch size shaft centre heights ➤ *1658*| *3*.

3
Split plummer block housings SAF



Suitable bearings

Shaft diameters from $1\frac{3}{8}$ inch to 8 inch

The dimensions of split plummer block housings SAF are matched to spherical roller bearings 222..-K ➤ *1658*| *2*. The range of shaft diameters is between $1\frac{3}{8}$ inch and 8 inch.

2
Bearing type and sizes

Bearing type	Size
Spherical roller bearings ■ with tapered bore and adapter sleeve	22209..-K to 22244..-K

Split spherical roller bearings

In the replacement of bearings, the unsplit spherical roller bearings can be replaced by split spherical roller bearings 222S. This gives a considerable reduction in the work associated with bearing replacement in numerous applications.

In order to ensure selection of the correct combination of housing and bearing when using split bearings, please contact Schaeffler.

The range of split spherical roller bearings is described in detail in a separate publication TPI 250.

Materials

Flake graphite cast iron as standard

Material for housing body:

- flake graphite cast iron to ASTM A48 Class 35 (standard)
- spheroidal graphite cast iron to ASTM A536 Grade 65-45-12

The colour of the paint coating on housings made from flake graphite cast iron is grey (colour RAL 7016, anthracite grey), while on housings made from spheroidal graphite cast iron it is red (colour RAL 3020, traffic red).

Locating and non-locating bearings

Locating bearing arrangement by means of locating ring

The bearing seats in the housing are machined such that the bearings are movable and can thus function as non-locating bearings. Locating bearing arrangements can be achieved by the insertion of a locating ring SR.

Lubrication

✎ *Grease or oil lubrication*

Suitable lubrication methods:

- grease lubrication
- oil lubrication

Sealing

For sealing of the bearing housings, the standard seals available are the labyrinth seal and the taconite seal ➤ *1660*|▦ *3*. These seals are matched to the rectangular section annular slots on both sides of the housings.

✎ *Labyrinth seals LER*

Labyrinth seals LER give non-contact sealing. They are therefore suitable for high speeds. The O ring, which is pressed between the labyrinth ring and shaft, is made from NBR and is suitable for temperatures of up to +100 °C.

Labyrinth seals allow shaft misalignment of up to 0,3° in both directions and are suitable for grease lubrication. If necessary, the labyrinth can be relubricated. For this purpose, a lubrication hole must be made in the upper housing section for each labyrinth seal. The optimum positions are indicated by cast-in pilot holes on the top of the housing.

✎ *Taconite seals TA*

Taconite seals TA comprise two rings, of which one is located in the housing and the other on the shaft. An axial and a radial labyrinth is formed between these rings, where the effectiveness of the latter is increased by means of two spiral rings. Due to the non-contact sealing, taconite seals are suitable for high speeds. The two statically acting O rings are made from NBR and are suitable for temperatures of up to +100 °C.

Taconite seals are designed for extreme operating conditions characterised by heavy contamination and the impact of abrasive particles.

Taconite seals allow shaft misalignment of up to 0,3° in both directions and are suitable for grease lubrication. For relubrication, the seal is fitted with a lubrication nipple.

✎ *Split labyrinth seals LERS*

For plummer block housings SAF, labyrinth seals are also available in a split design. As a result, the work involved in replacing the seal can be considerably reduced.

✎ *Split taconite seals TAS*

For plummer block housings SAF, taconite seals are also available in a split design. As a result, the work involved in replacing the seal can be considerably reduced. Split taconite seals are not standard seals and are available by agreement.

✎ *Covers EC*

Covers EC are used with housings closed on one side. The covers fit in the rectangular section annular slots in the housings. They are suitable for temperatures up to +100 °C.



3
Labyrinth and taconite seal

++ = *highly suitable*
\+ = *suitable*
(+) = *suitable with restrictions*
– = *not suitable*

Sealing		**Labyrinth seal, unsplit**	**Taconite seal, unsplit**
		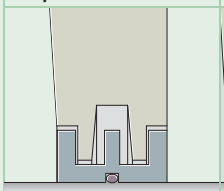	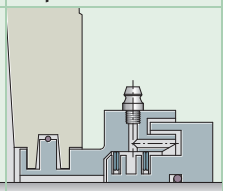
Designation		**LER**	**TA**
Material		Aluminium, NBR	Steel, NBR
Pieces per pack		1	1
Suitability for sealing against			
dust		(+)	++
fine, solid particles		+	++
coarse, solid particles		+	++
slivers		++	++
spray liquids		–	++
Operating limits			
Long term temperature	°C	–40 to +100 (due to NBR)	–40 to +100 (due to NBR)
	°F	–40 to +210 (due to NBR)	–40 to +210 (due to NBR)
Circumferential velocity	m/s	No restriction	No restriction
Misalignment	°	≦0,3	≦0,5
Low friction		++	+
Axial shaft displacement (suitability as non-locating bearing)		+	+
Vertical arrangement		(+)	(+)
Suitability for grease relubrication		+	++
Suitability for oil lubrication		(+)	–
Compatibility with sunlight		++	++
Preconditions			
Tolerance class[1] of shaft diameter		h8 (h9)	h8 (h9)
Shaft roughness	µm	Ra 3,2	Ra 3,2

[1] *The envelope requirement Ⓔ applies*

Scope of delivery

When ordering a split plummer block housing SAF of universal design SAF..U, the accessories frequently required for standard shaft diameters (labyrinth seals, covers, locating rings and a selection of lubrication nipples) are already included in the scope of delivery. Depending on the housing configuration, it may be necessary to order other accessories separately.

Further information

Detailed information on split plummer block housings SAF:
Split Plummer Block Housings SAF TPI 229.

4.3 Split plummer block housings RLE

✎ *Housings for the bearing arrangements of back-up rollers* 4

Split plummer block housings RLE

Split plummer block housings RLE were developed specifically for the bearing arrangements of back-up rollers ➤*1661*|4.

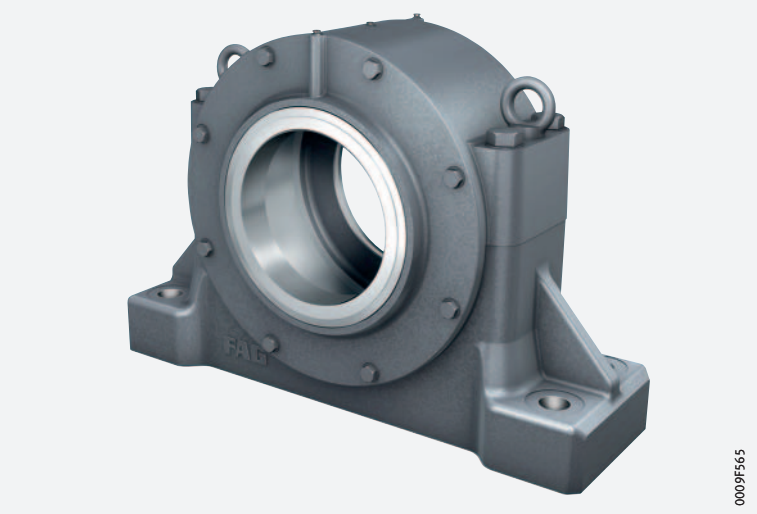

Suitable bearings

✎ *Shaft diameters from 180 mm to 500 mm*

The dimensions of split plummer block housings RLE are matched to spherical roller bearings 241 ➤*1661*|4. The range of shaft diameters is between 180 mm and 500 mm.

4 *Bearing type and sizes*

Bearing type	Size
Spherical roller bearings	
■ with tapered bore and withdrawal sleeve	24122..-K30 to 241/500..-K30
■ with cylindrical bore	24122 to 241/500

Materials

✎ *Flake graphite cast iron as standard*

Material for housing body:

- flake graphite cast iron (standard)
- spheroidal graphite cast iron
- cast steel

Locating and non-locating bearings

✎ *Housings in locating bearing design and non-locating bearing design*

The housings are supplied as a locating bearing design or non-locating bearing design. In the locating bearing, the bearing is clamped between the housing covers. In the non-locating bearing, the bearing can align itself axially, since the covers have shorter centring collars.

Lubrication

✎ *Grease lubrication*

Suitable lubrication method:

- grease lubrication

Sealing

Housing designs with and without cover

Plummer block housings RLE of design A are intended for the bearing arrangements of shaft ends. One side is closed by a cover and the other side is sealed against the shaft. Design B is intended for continuous shafts, in which case the housing is sealed against the shaft on both sides.

Labyrinth rings with felt seal

The seal is a combination of a labyrinth seal and a felt seal ➤ *1662* | *5*. The labyrinth is separated from the grease cavity in the housing by oil-soaked felt strips, so a more economical grease can be used for labyrinth lubrication.

The labyrinth rings are unsplit. The seal allows shaft misalignment of up to 0,5° in both directions.

5
Labyrinth ring with felt seal for plummer block housing RLE

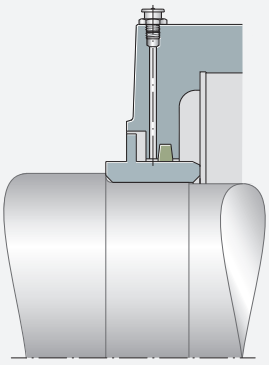

Scope of delivery

In the case of split plummer block housings RLE, the seals and cover (for a housing design closed on one side) are included in the scope of delivery. The rolling bearing and, if necessary, the withdrawal sleeve must be ordered separately.

Further information

Detailed information on split plummer block housings RLE:
Bearing Housings GK 1.

4.4 Split plummer block housings KPG, KPGZ

Housings for converters in the steel industry

Split plummer block housings KPG and KPGZ were developed specifically for the journal bearing arrangement in converters ➤*1663*|*6*.

6
Split plummer block housings KPG, KPGZ



Suitable bearings

Shaft diameters from 470 mm to 1320 mm

The dimensions of split plummer block housings KPG and KPGZ are matched to spherical roller bearings 249 ➤*1663*|*5*. The housings KPG are intended for bearings with a tapered bore and adjustment sleeve, while the housings KPGZ are intended for bearings with a cylindrical bore. The range of shaft diameters is between 470 mm and 1320 mm.

5
Bearing type and sizes

Bearing type	Size
Spherical roller bearings	
■ with tapered bore and adjustment sleeve	249/470..-K30 to 249/1250..-K30
■ with cylindrical bore	249/500 to 249/1320

Split spherical roller bearings

On the locating bearing side of the converter, an unsplit spherical roller bearing can be replaced by a split spherical roller bearing. Since there is no need to dismount the drive system, the work involved in mounting can be considerably reduced.

In order to ensure selection of the correct combination of housing and bearing when using split bearings, please contact Schaeffler.

The range of split spherical roller bearings is described in detail in a separate publication TPI 250.

Materials

Spheroidal graphite cast iron

Material for housing body:
- spheroidal graphite cast iron

Locating and non-locating bearings

✎ *Housings in locating bearing design and non-locating bearing design*

The housings are supplied as a locating bearing design or non-locating bearing design. The locating bearing on the drive side provides axial guidance of the converter support ring.

The locating bearing design of the housings KPG and KPGZ is originally designed for the fitting of unsplit spherical roller bearings.
The locating bearing arrangement is formed by locating rings on both sides of the bearing. A housing of the locating bearing design can also accommodate a split spherical roller bearing, replacing an unsplit bearing.

The non-locating bearing design is fitted with unsplit bearings.
The bearing outer ring can be displaced axially in a bearing bush.

Lubrication

✎ *Grease lubrication*

Suitable lubrication method:

- grease lubrication

Sealing

✎ *High-pressure packing as standard*

Plummer block housings KPG and KPGZ are sealed by means of high-pressure packing. These allow shaft misalignment of up to 1,5°.
Profiled rubber seals are available by agreement as special seals ➤ *1664* | *7*.

7
Seals for plummer block housings KPG and KPGZ

① *High-pressure packing*
② *Profiled rubber seal*

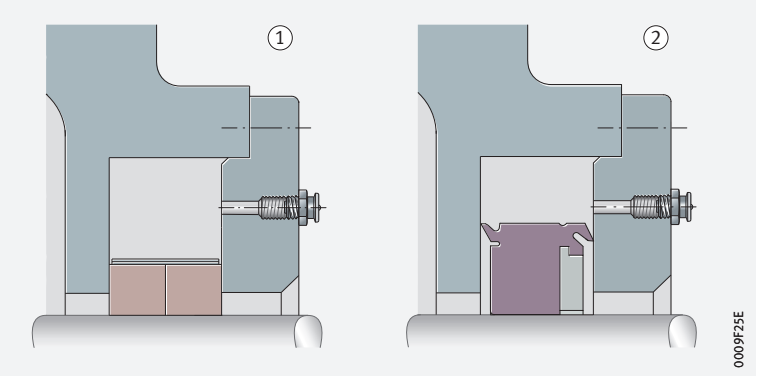

Scope of delivery

In the case of split plummer block housings KPG and KPGZ, the seals are included in the scope of delivery. The rolling bearing and, if necessary, the adjustment sleeve must be ordered separately.

Since customer-specific solutions using these housings are developed for each converter application, we recommend consulting our engineering service before ordering these housings.

Further information

Detailed information on split plummer block housings KPG and KPGZ: Bearing Housings GK 1, and Rolling Bearing Arrangements for Converters TPI 148.

4.5 Split plummer block housings LOE

✎ *Housings for bearing arrangements running at high speeds*

Split plummer block housings LOE are designed for oil lubrication. They are suitable for high speed bearing arrangements, for example in fans ➤ *1665* | 8.

8
Split plummer block housing LOE



Suitable bearings

✎ *Shaft diameters from 50 mm to 240 mm*

The dimensions of split plummer block housings LOE are matched to spherical roller bearings 222 and 223 ➤ *1665* | 6. The housings LOE2 and LOE3 are intended for bearings with a cylindrical bore, while the housings LOE5 and LOE6 are intended for bearings with a tapered bore and adapter sleeve. The range of shaft diameters is between 50 mm and 240 mm.

6
Bearing type and sizes

Bearing type	Size
Spherical roller bearings	
■ with tapered bore and adapter sleeve	22217..-K to 22248..-K
	22314..-K to 22336..-K
■ with cylindrical bore	22214 to 22248
	22310 to 22336

Materials

✎ *Flake graphite cast iron as standard*

Material for housing body:

- flake graphite cast iron (standard)
- spheroidal graphite cast iron
- cast steel

Locating and non-locating bearings

✎ *Housings in locating bearing design and non-locating bearing design*

The housings are supplied as a locating bearing design or non-locating bearing design. In the locating bearing, the bearing is clamped between the housing covers. In the non-locating bearing, the bearing can align itself axially, since the covers have shorter centring collars.

Lubrication

✎ *Oil lubrication*

Suitable lubrication method:

- oil lubrication

Sealing

Housing designs with and without cover

Plummer block housings LOE of design A are intended for the bearing arrangements of shaft ends. One side is closed by a cover and the other side is sealed against the shaft. Design B is intended for continuous shafts, in which case the housing is sealed against the shaft on both sides.

Labyrinth seals

The seal used here is a labyrinth seal ➤ *1666* | *9*. The labyrinth rings are unsplit. The grease chamber in the labyrinth can be relubricated. The labyrinth seal allows shaft misalignment of up to 0,25° in both directions and is suitable for oil lubrication.

9
Labyrinth seal for plummer block housing LOE

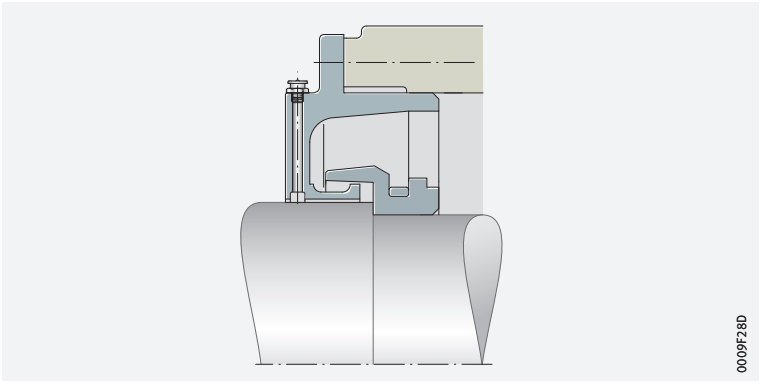

Scope of delivery

In the case of split plummer block housings LOE, the seals and cover (for a housing design closed on one side) are included in the scope of delivery. The rolling bearing and, if necessary, the adapter sleeve or locknut must be ordered separately.

Further information

Detailed information on split plummer block housings LOE:
Bearing Housings GK 1.

4.6 Plummer block housing units VRE3

Housing units for wide range of applications

Plummer block housing units VRE3 were originally developed for fan applications, for the flying bearing arrangement of high speed impellers ➤*1667*| *10*. The units are now used wherever there is a requirement for a precise bearing arrangement that can be easily mounted, for example in conveying equipment, test rigs, machinery for process engineering, belt transmissions, laboratory machines, textile machinery and feed equipment.

10
Plummer block housing units VRE3



Complete housing units

Completely assembled units

Plummer block housing units VRE3 comprise a tubular plummer block housing VR3 with seals and a shaft VRW3 supported in rolling bearings of dimension series 3. The units are completely assembled and the bearings are greased. The units can therefore be integrated directly in existing machinery without substantial preparation.

Suitable bearings

Shaft diameters from 25 mm to 120 mm

Plummer block housing units VRE3 are fitted, depending on their design, with various combinations of deep groove ball bearings, cylindrical roller bearings and angular contact ball bearings ➤*1667*| *7*. Only bearings with a cylindrical bore are fitted. The range of shaft diameters is between 25 mm and 120 mm.

7
Plummer block housing units and bearings

Plummer block housing unit	Bearing		
	Quantity	Bearing type	Size
VRE305A – VRE324A	2	Deep groove ball bearings	6305 – 6324
VRE305B – VRE324B	1	Cylindrical roller bearings	NJ305E – NJ324E
	1	Deep groove ball bearings	6305 – 6324
VRE305C – VRE324C	1	Cylindrical roller bearings	NU305E – NU324E
	2	Angular contact ball bearings	7305B.UA – 7324B.UA
VRE305D – VRE324D	1	Cylindrical roller bearings	NU305E – NU324E
	1	Deep groove ball bearings	6305 – 6324
VRE305E – VRE324E	2	Cylindrical roller bearings	NU305E – NU324E
	1	Deep groove ball bearings	6305 – 6324
VRE305F – VRE316F	2	Deep groove ball bearings	6305 – 6316

Materials

✎ *Flake graphite cast iron*

Material for housing body:

- flake graphite cast iron

Lubrication

✎ *Grease lubrication*

Suitable lubrication method:

- grease lubrication

Sealing

✎ *Combined seals comprising felt seal and V ring*

Plummer block housing units VRE3 are sealed on both sides by a combined seal comprising a felt seal and V ring ➤*1668*| *11*. As a result, effective sealing against the ingress of contamination and the escape of lubricant is achieved. The oil-soaked felt strips are inserted in the slots in the covers on the housing. The external V rings are made from NBR and are suitable for temperatures of up to +100 °C. If a circumferential velocity of more than 8 m/s is present, axial support of the V rings is necessary. At or above 12 m/s, the seal lip lifts and the V ring then acts as a splash ring.

11
Felt seal with V ring for plummer block housing units VRE3

① *Sealing of designs A, B and F*
② *Sealing of designs C, D and E*

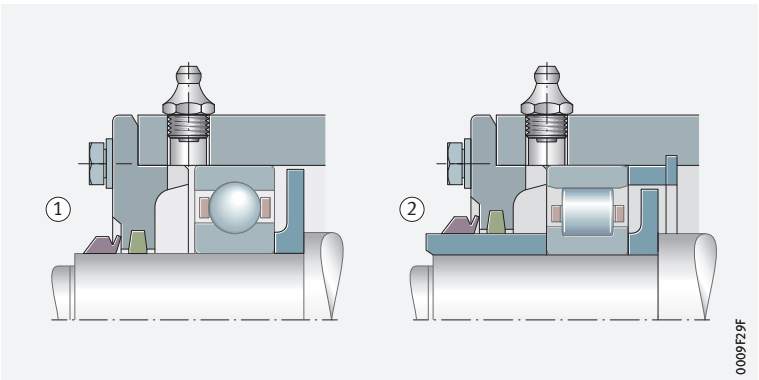

Scope of delivery

Plummer block housing units VRE3 are ideally ordered as complete units. The housing body, shaft, seals and rolling bearings are then included in the scope of delivery. It is also possible, however, to order the housing body (with seals), the shaft and the rolling bearings separately.

Further information

Detailed information on plummer block housings VRE3:
Bearing Housings GK 1.

4.7 Unsplit plummer block housings BND

✎ *Housings for very high loads*

Unsplit plummer block housings BND are suitable for very high loads ➤*1669*| *12*. The housings, which were originally developed for belt conveyors, can also be beneficially used in materials processing, for example in hard crushers, sugar cane mill drives and rotor shafts in wind turbines.

12
Unsplit plummer block housings BND

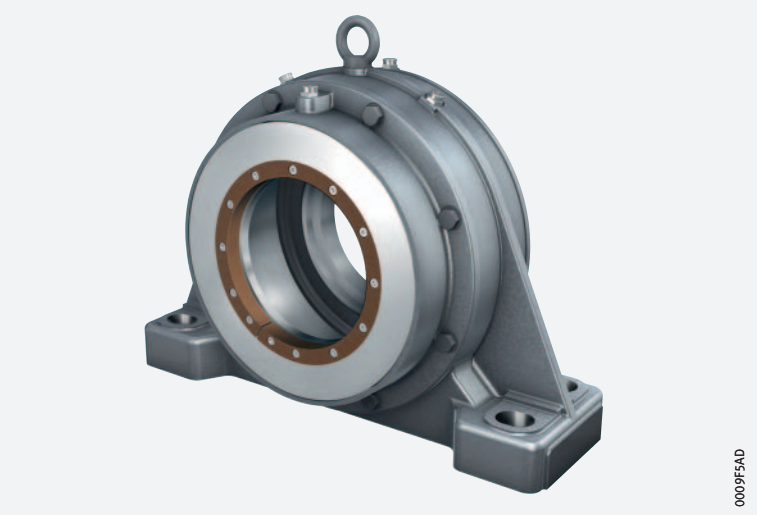

Suitable bearings

✎ *Shaft diameters from 60 mm to 420 mm*

The dimensions of unsplit plummer block housings BND are matched to spherical roller bearings 222, 230, 231 and 232 ➤*1669*| *8*. The range of shaft diameters is between 60 mm and 420 mm.

8
Bearing type and sizes

Bearing type	Size
Spherical roller bearings	22213..-K to 22284..-K
■ with tapered bore and adapter sleeve	23024..-K to 23084..-K
	23122..-K to 23184..-K
	23222..-K to 23284..-K
■ with cylindrical bore	22213 to 22284
	23024 to 23084
	23122 to 23184
	23222 to 23284

Materials

Spheroidal graphite cast iron as standard

Material for housing body:

- spheroidal graphite cast iron (standard)
- cast steel

Locating and non-locating bearings

Housings in locating bearing design and non-locating bearing design

The housings are supplied as a locating bearing design or non-locating bearing design. In the locating bearing, the bearing is clamped between the housing covers. In the non-locating bearing, the bearing can align itself axially, since the covers have shorter centring collars.

Lubrication

Grease lubrication

Suitable lubrication method:

- grease lubrication

Sealing

Housing designs with and without cover

Plummer block housings BND of design A are intended for the bearing arrangements of shaft ends. One side is closed by a cover and the other side is sealed against the shaft. Design B is intended for continuous shafts, in which case the housing is sealed against the shaft on both sides.

Labyrinth and taconite seals

Labyrinth seals (suffix Y) or taconite seals (suffix T) can be used ➤ *1671* | *9*. Where shafts of constant diameter are used, the seals are located on the shaft by means of slotted conical clamping rings made from laminated fabric. The labyrinth rings, taconite seals and covers are unsplit.

The seals allow shaft misalignment of up to 0,5° in both directions and are suitable for grease lubrication.

9
Labyrinth and taconite seal

++ = *highly suitable*
\+ = *suitable*
(+) = *suitable with restrictions*
– = *not suitable*

Sealing		Labyrinth seal, unsplit	Taconite seal, unsplit
		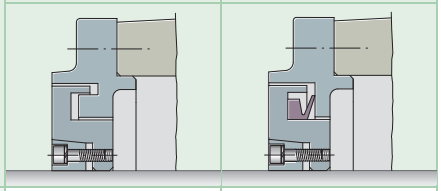	
Designation		Suffix **Y**	Suffix **T**
Suitability for sealing against			
dust		+	++
fine, solid particles		+	++
coarse, solid particles		+	++
slivers		++	++
spray liquids		–	+
Operating limits			
Long term temperature	°C	–30 to +100	–30 to +100
	°F	–22 to +210	–22 to +210
Circumferential velocity	m/s	No restriction	≦12
Misalignment	°	≦0,5	≦0,5
Low friction		++	+
Axial shaft displacement (suitability as non-locating bearing)		+	+
Vertical arrangement		–	–
Suitability for grease relubrication		+	++
Suitability for oil lubrication		–	–
Compatibility with sunlight		++	++
Preconditions			
Tolerance class[1] of shaft diameter		h8 (h9)	h8 (h9)
Shaft roughness	µm	Ra 3,2	Ra 3,2

[1] *The envelope requirement Ⓔ applies*

Scope of delivery

In the case of unsplit plummer block housings BND, the seals and cover (for a housing design closed on one side) are included in the scope of delivery. The rolling bearing and, if necessary, the adapter sleeve must be ordered separately.



Further information

Detailed information on unsplit plummer block housings BND:
Bearing Housings GK 1.

4.8 Take-up housings SPA

Housings for tensioner drum bearing arrangements

Take-up housings SPA are combined with FAG spherical roller bearings, seals and grease filling to form bearing arrangement units for very high loads ➤ *1672* | *13*. The housings are unsplit. They were developed specifically for tensioner drum bearing arrangements in belt conveyor plant. There is a yoke-shaped drawbar eye for attachment to the tensioning device. The housing is guided by means of rails in the belt support structure.

13
Take-up housing SPA



Suitable bearings

Shaft diameters from 50 mm to 400 mm

The dimensions of take-up housings SPA are matched to spherical roller bearings 222..-K, 230..-K, 231..-K and 232..-K ➤ *1672* | *10*. The range of shaft diameters is between 50 mm and 400 mm.

10
Bearing type and sizes

Bearing type	Size
Spherical roller bearings	22211..-K to 22228..-K
■ with tapered bore and adapter sleeve	23028..-K to 23056..-K
	23132..-K to 23176..-K
	23222..-K to 23284..-K

Materials

Cast steel as standard

Material for housing body:
- cast steel (standard)
- spheroidal graphite cast iron

Locating and non-locating bearings

Housings in locating bearing design and non-locating bearing design

The housings are supplied as a locating bearing design or non-locating bearing design. In the locating bearing, the bearing is clamped between the housing covers. In the non-locating bearing, the bearing can align itself axially, since the covers have shorter centring collars.

Lubrication

Grease lubrication

Suitable lubrication method:
- grease lubrication

Sealing

Housing designs with and without cover

Take-up housings SPA of design A are intended for the bearing arrangements of shaft ends. One side is closed by a cover and the other side is sealed against the shaft. Design B is intended for continuous shafts, in which case the housing is sealed against the shaft on both sides.

✎ *Labyrinth and taconite seals*

Labyrinth seals (suffix Y) or taconite seals (suffix T) can be used ➤*1673*|▦ *11*. Where shafts of constant diameter are used, the seals are located on the shaft by means of slotted conical clamping rings made from laminated fabric. The labyrinth rings, taconite seals and covers are unsplit.

The seals allow shaft misalignment of up to 0,5° in both directions and are suitable for grease lubrication.

▦ **11**
Labyrinth and taconite seal

++ = highly suitable
+ = suitable
(+) = suitable with restrictions
– = not suitable

Sealing		**Labyrinth seal, unsplit**	**Taconite seal, unsplit**
		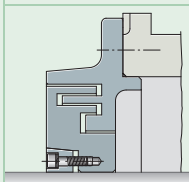	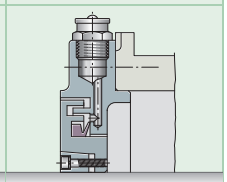
Designation		Suffix **Y**	Suffix **T**
Suitability for sealing against			
dust		+	++
fine, solid particles		+	++
coarse, solid particles		+	++
slivers		++	++
spray liquids		–	+
Operating limits			
Long term temperature	°C	–30 to +100	–30 to +100
	°F	–22 to +210	–22 to +210
Circumferential velocity	m/s	No restriction	≦12
Misalignment	°	≦0,5	≦0,5
Low friction		++	+
Axial shaft displacement (suitability as non-locating bearing)		+	+
Vertical arrangement		–	–
Suitability for grease relubrication		+	++
Suitability for oil lubrication		–	–
Compatibility with sunlight		++	++
Preconditions			
Tolerance class[1] of shaft diameter		h8 (h9)	h8 (h9)
Shaft roughness	µm	Ra 3,2	Ra 3,2

1) The envelope requirement Ⓔ applies



Scope of delivery

In the case of take-up housings SPA, the seals and cover (for a housing design closed on one side) are included in the scope of delivery.
The rolling bearing and, if necessary, the adapter sleeve must be ordered separately.

Further information

Detailed information on take-up housings SPA:
Bearing Housings GK 1.

4.9 Flanged housings F112

Housings for wide range of applications

Flanged housings F112 can be used in a wide variety of applications, for example in machine structures and support structures ➤*1674*|*14*.

14
Flanged housing F112

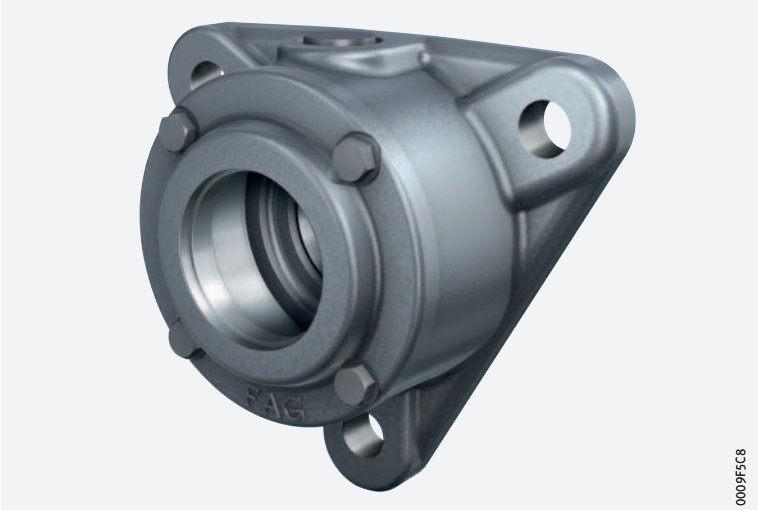

Suitable bearings

Shaft diameters from 20 mm to 60 mm

The dimensions of flanged housings F112 are matched to self-aligning ball bearings 112 with an extended inner ring ➤*1674*|*12*. The range of shaft diameters is between 20 mm and 60 mm.

12
Bearing type and sizes

Bearing type	Size
Self-aligning ball bearings ■ with cylindrical bore and extended inner ring	11204 to 11212

Materials

Flake graphite cast iron

Material for housing body:
- flake graphite cast iron

Locating bearing

Housing in locating bearing design only

In flanged housings F112, the self-aligning ball bearing is clamped between the abutment shoulder in the housing and the cover. As a result, the bearing acts as a locating bearing.

Lubrication

Grease lubrication

Suitable lubrication method:
- grease lubrication

Sealing

Felt seals

Flanged housings F112 are sealed by means of felt seals ➤*1675*|*15*. The felt seals allow shaft misalignment of up to 0,5° in both directions and are suitable for grease lubrication. The oil-soaked felt strips must be inserted in the associated slots in the housing.

15
Felt seal for flanged housing F112

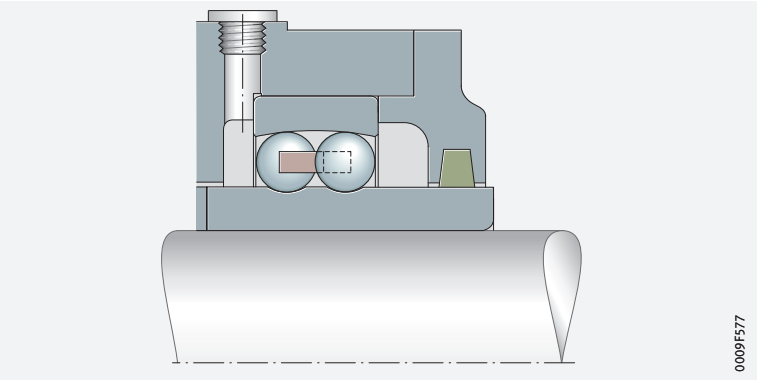

Scope of delivery

In the case of flanged housings F112, the felt strips for sealing the housing are included in the scope of delivery. The rolling bearing must be ordered separately.

Further information

Detailed information on flanged housings F112:
Bearing Housings GK 1.

4.10 Flanged housings F5

Housings for wide range of applications

Flanged housings F5 can be used in a wide variety of applications ➤*1675*| 16.

16
Flanged housing F5



Suitable bearings

Shaft diameters from 20 mm to 100 mm

Flanged housings F5 are intended for fitting with self-aligning ball bearings, barrel roller bearings and spherical roller bearings with a tapered bore that are located on the shaft using adapter sleeves ➤*1676*| 13. The range of shaft diameters is between 20 mm and 100 mm.

13 *Bearing types and sizes*

Bearing type	Size
Spherical roller bearings ■ with tapered bore and adapter sleeve	22205..-K to 22222..-K
Self-aligning ball bearings ■ with tapered bore and adapter sleeve	1205-K to 1222-K 2205-K to 2222-K
Barrel roller bearings ■ with tapered bore and adapter sleeve	20205-K to 20222-K

Materials

Flake graphite cast iron as standard

Material for housing body:

- flake graphite cast iron (standard)
- spheroidal graphite cast iron

Locating and non-locating bearings

Locating bearing arrangement by means of locating rings

The bearing seats in the housing are machined such that the bearings are movable and can thus function as non-locating bearings. Locating bearing arrangements can be achieved by the insertion of locating rings. For housings F505 to F513, locating rings FE are used, while for housings F515 to F522, locating rings FRM are used. The quantity of locating rings required is 1 or 2. Two rings are inserted on both sides of the bearing, while a single ring is inserted on the side with the adapter sleeve nut.

Lubrication

Grease lubrication

Suitable lubrication method:

- grease lubrication

Sealing

Housing designs with and without cover

Flanged housings F5 of design A are intended for the bearing arrangements of shaft ends. One side is closed by a cover and the other side is sealed against the shaft. Design B is intended for continuous shafts, in which case the housing is sealed against the shaft on both sides.

Felt seals

Flanged housings F5 are sealed by means of felt seals ➤ *1676* | *17*. The felt seals allow shaft misalignment of up to 0,5° in both directions and are suitable for grease lubrication. The oil-soaked felt strips must be inserted in the associated slots in the housing.

17 *Felt seal for flanged housing F5*

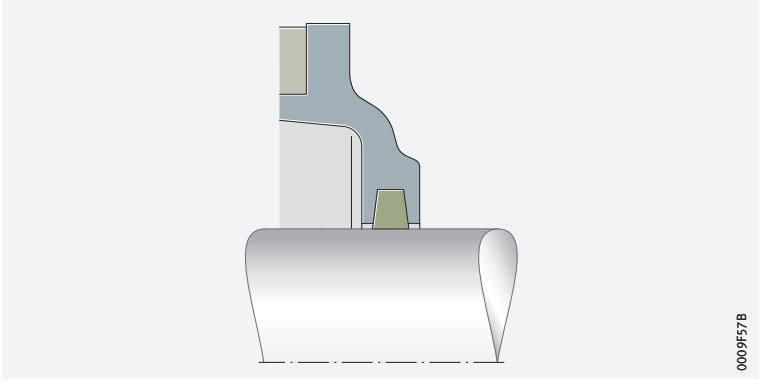

Scope of delivery

In the case of flanged housings F5, the felt strips for sealing the housing as well as the cover (for a housing design closed on one side) are included in the scope of delivery. Locating rings must be ordered separately. The rolling bearing and the adapter sleeve must also be ordered separately.

Further information

Detailed information on flanged housings F5:
Bearing Housings GK 1.

4.11 Legal notice regarding data freshness

✎ The further development of products may also result in technical changes to catalogue products

Of central interest to Schaeffler is the further development and optimisation of its products and the satisfaction of its customers. In order that you, as the customer, can keep yourself optimally informed about the progress that is being made here and with regard to the current technical status of the products, we publish any product changes which differ from the printed version in our electronic product catalogue.

We therefore reserve the right to make changes to the data and illustrations in this catalogue. This catalogue reflects the status at the time of printing. More recent publications released by us (as printed or digital media) will automatically precede this catalogue if they involve the same subject. Therefore, please always use our electronic product catalogue to check whether more up-to-date information or modification notices exist for your desired product.

Link to electronic product catalogue

The following link will take you to the Schaeffler electronic product catalogue: *https://medias.schaeffler.com*.

4.12 Further information

In addition to the data in this chapter, the following chapters must also be observed in the selection of a housing:

- Lubrication ➤*70|6*
- Locating and non-locating bearing concepts ➤*1559|1.2*
- Housing materials ➤*1561|1.3*

Further information:

- Comprehensive housing catalogue GK 1
  https://www.schaeffler.de/std/1D54
- Electronic housing selection wizard
  https://www.schaeffler.de/std/1D61



Fasteners and retainers





1 Fasteners and retainers 1680

1.1 Product design 1680
1.2 Load carrying capacity 1685
1.3 Dimensions, tolerances 1685
1.4 Suffixes 1686
1.5 Design of bearing arrangements 1686
1.6 Mounting and dismounting 1687
1.7 Legal notice regarding data freshness 1687

FAG

Product tables ____ *1688*
Adapter sleeves ____ *1688*
Withdrawal sleeves ____ *1702*
Locknuts ____ *1726*
Shaft nuts ____ *1730*
Tab washers ____ *1732*
Retaining brackets ____ *1734*



1 Fasteners and retainers

Adapter sleeves and withdrawal sleeves are suitable for locating bearings with a tapered bore on cylindrical shafts ➤*1680*|*1*, whereby:

- adapter sleeves require no additional means of retention on the shaft ➤*1680*
- withdrawal sleeves give easier subsequent dismounting of the bearing ➤*1682*
- designs with oil slots permit the use of the hydraulic method ➤*1681* and ➤*1682*

Locknuts and shaft nuts are suitable for locating bearings on cylindrical and tapered shafts, or on adapter sleeves, and for mounting and dismounting of bearings on withdrawal sleeves, whereby:

- locknuts can be tightened particularly easily with striking-face or hook wrenches ➤*1683*
- shaft nuts do not require any slots on the outside of the shaft, which increases the strength of the shaft and makes it easier to produce ➤*1683*

Tab washers and retaining brackets are suitable for securing locknuts, whereby:

- tab washers for smaller locknuts (series KM and KML) ➤*1684* and
- retaining brackets for larger locknuts (series HM30 and HM31) are used ➤*1684*

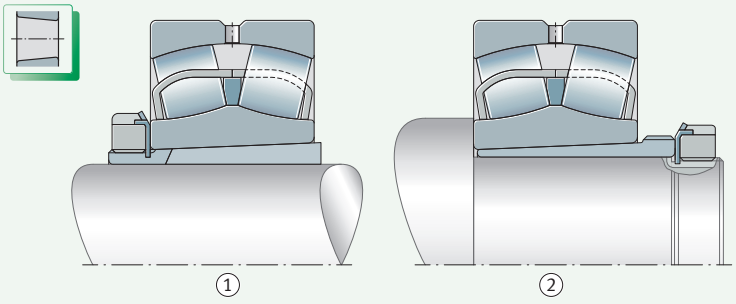

1
Location of a spherical roller bearing with tapered bore

① *Cylindrical shaft, adapter sleeve with locknut and tab washer*
② *Cylindrical shaft, withdrawal sleeve with locknut and tab washer*

1.1 Product design

Adapter sleeves

Suitability and function

Adapter sleeves are suitable where bearings with a tapered bore are to be located on cylindrical shafts. In this case, the bearing is pressed onto the adapter sleeve until the required reduction in radial internal clearance is achieved. Adapter sleeves require no additional means of retention on the shaft. The bearings can be positioned at any point on shafts with a constant diameter.

If adapter sleeves are used with a support ring to DIN 5418 on stepped shafts, the bearings can be axially located to high accuracy. In addition, this gives simpler dismounting of the bearings.

✎ Design features

The tensile strength of the adapter sleeve material is at least 430 N/mm^2. Adapter sleeves are slotted and have a shaft thread for the locknut. Depending on the series, the outside surface of the adapter sleeves has a taper of 1:12 or 1:30 ➤ *1681*|▦ *1*.

▦ **1**
Adapter sleeves

Series	Taper on the outside surface
H2, H3, H23, H28, H30, H31, H32, H33, H38, H39	1:12
H240, H241, H242, H248, H249	1:30

✎ Adapter sleeves for the hydraulic method

The mounting and dismounting of large bearings requires high mounting forces and is made easier by using the hydraulic method. Adapter sleeves for the hydraulic method have oil slots and an oil connector ➤ *1681*|⧉ *2*. Depending on the arrangement of oil slots and oil connector, the adapter sleeves have the suffix HG, HGJ, HK or HKJ ➤ *1686*|*1.4*. The product tables give the mounting dimensions for the oil connector.

Adapter sleeves with a sleeve bore diameter greater than or equal to 300 mm are only available in the design for the hydraulic method.
For adapter sleeves with sleeve bore measurements between 140 mm and 280 mm, a design with or without oil slots can be selected in the product tables. Smaller adapter sleeves for the hydraulic method are available by agreement.

⧉ **2**
Spherical roller bearings on adapter sleeve for hydraulic method

① *Oil connector on threaded side*
② *Oil connector on taper side*

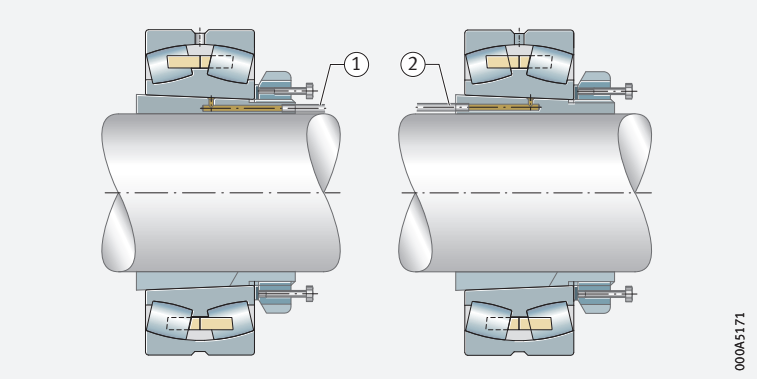

✎ Available designs

Adapter sleeves are supplied complete with locknuts and tab washers. For larger sizes, retaining brackets are used instead of tab washers ➤ *1681*|⧉ *3*. Sizes not listed in the product tables are available by agreement.

The product tables contain adapter sleeves for metric shafts. Adapter sleeves for inch size shafts are available by agreement.

Adapter sleeves for sealed spherical roller bearings are available by agreement.

⧉ **3**
Adapter sleeves

① *With locknut and tab washer*
② *With locknut and retaining bracket*

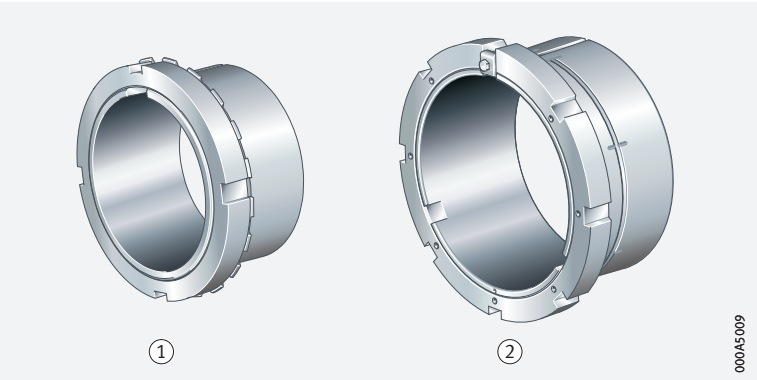

Withdrawal sleeves

Suitability and function

Withdrawal sleeves are suitable where bearings with a tapered bore are located on cylindrical shafts. The tapered sleeve is pressed into the bearing bore until the required reduction in radial internal clearance is achieved. The bearing must be axially supported during this process, for example by means of a shaft shoulder.

Withdrawal sleeves give easier dismounting of the bearings, as the press fit of the bearing can be loosened with the aid of a locknut applied to the withdrawal sleeve.

Design features

The tensile strength of the withdrawal sleeve material is at least 430 N/mm^2. Withdrawal sleeves are slotted and have a shaft thread for the locknut. Depending on the series, the outside surface of the withdrawal sleeves has a taper of 1:12 or of 1:30 ➤*1682*|▦*2*.

▦*2*
Withdrawal sleeves

Series	Taper on the outside surface
AH2, AH(X)3, AH22, AH(X)23, AH28, AH(X)30, AH(X)31, AH(X)32, AH33, AH38, AH39	1:12
AH240, AH241, AH242, AH248, AH249	1:30

Withdrawal sleeves for the hydraulic method

The mounting and dismounting of large bearings requires high mounting forces and is made easier by using the hydraulic method. Withdrawal sleeves for the hydraulic method have oil slots in the tapered outside surface and in the sleeve bore ➤*1682*|⧉*4*. Oil connectors are offset to each other by 90°. The hydraulic withdrawal sleeves have the suffix H ➤*1686*|*1.4*. The product tables give the mounting dimensions for the oil connector.

Withdrawal sleeves with a sleeve bore diameter greater than or equal to 300 mm are only available in the design for the hydraulic method. For withdrawal sleeves with sleeve bore measurements between 150 mm and 280 mm, a design with or without oil slots can be selected in the product tables. Smaller withdrawal sleeves for the hydraulic method are available by agreement.

⧉*4*
Spherical roller bearing on withdrawal sleeve for hydraulic method

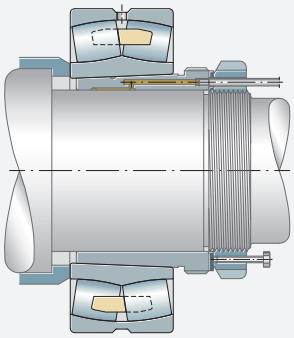

Available designs

Locknuts and retainers are not included in the scope of delivery for withdrawal sleeves ➤*1683*|⧉*5*. Sizes not listed in the product tables are available by agreement.

The product tables contain withdrawal sleeves for metric shafts. Withdrawal sleeves for inch size shafts are available by agreement.

5
Withdrawal sleeve



Locknuts

Suitability and function

Locknuts can be used to locate bearings on shafts or adapter sleeves. They also give easier mounting of bearings with a tapered shaft seat and the mounting and dismounting of bearings on withdrawal sleeves.

Design features

The locknuts are made from steel and the tensile strength of the material is at least 350 N/mm^2.

They have four or eight evenly spaced slots on the circumference, into which hook wrenches or striking-face wrenches can be fitted ➤*1683*| 5 *6*.

Available designs

Locknuts with threaded holes for mounting screws are available by agreement. These locknuts have the suffix H.

Precision locknuts are described in a separate publication TPI 123.

6
Locknuts

① *KM, KML, HM..T*
② *HM30, HM31*

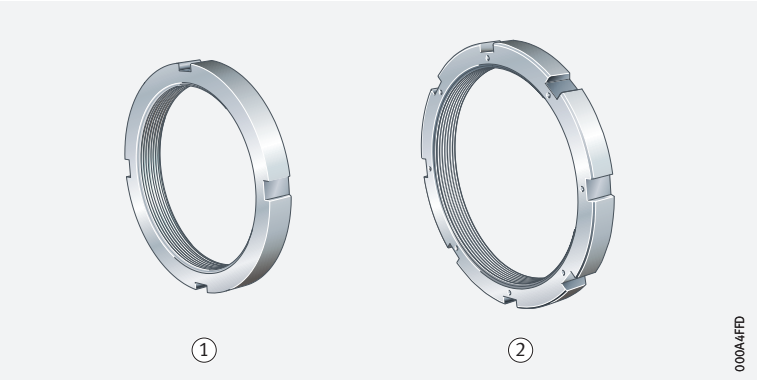

Shaft nuts

Suitability and function

Shaft nuts HMZ allow precise, secure axial location of bearings on cylindrical and tapered shafts or on adapter sleeves.

Design features

The shaft nuts are made from steel and the tensile strength is at least 350 N/mm^2.

Shaft nuts HMZ are interchangeable with conventional locknuts HM and KM. They are secured, however, not by means of form fit using tab washers or retaining brackets, but by force locking. Four or eight axial clamping screws allow uniform clamping of the thread flanks on the circumference ➤*1684*| 5 *7*. There is no need for slots on the outside diameter of the nut.

For screw mounting on the shaft thread, four or eight threaded blind holes are applied to the circumference of the nut, into which the threaded rod also supplied is screwed.

Advantages for the shaft

A shaft with a screw mounted shaft nut does not require a retaining slot. As a result, the shaft has higher strength and is more economical to manufacture than a shaft with a retaining slot for a tab washer or retaining bracket.

Detailed description of shaft nuts HMZ TPI WL 91-8.

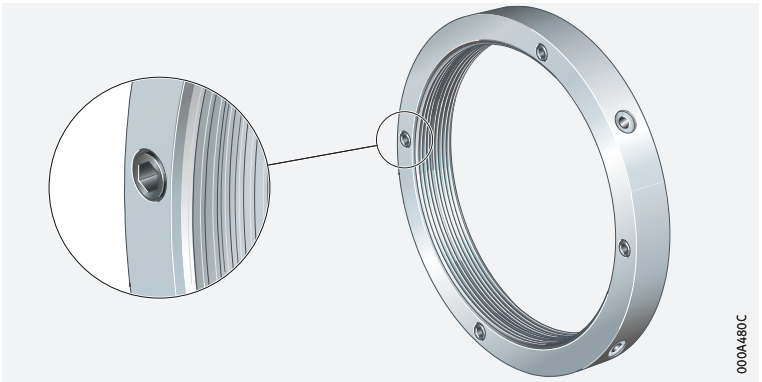

7
Shaft nut

The clamping screws serve to generate a force locking connection between the nut and shaft thread

Retainers

Tab washers

For smaller locknuts

Tab washers MB and MBL are simple, reliable elements for securing smaller locknuts (series KM and KML) ➤ *1684* | *8*.

They have an inner tab and several outer tabs evenly spaced around the circumference. The inner tab grips in the slot on the adapter sleeve or shaft, one of the outer tabs is bent into a slot in the nut for location.

The washers are made from steel and the tensile strength of the material is at least 300 N/mm^2.

Retaining brackets

For locknuts HM30 and HM31

Retaining brackets MS are used to secure locknuts HM30 and HM31.

The retaining brackets are fixed to the locknut using a hexagonal screw. They engage in a slot in the nut and in the adapter sleeve or shaft ➤ *1684* | *8*.

The fixing screws are secured with a retainer.

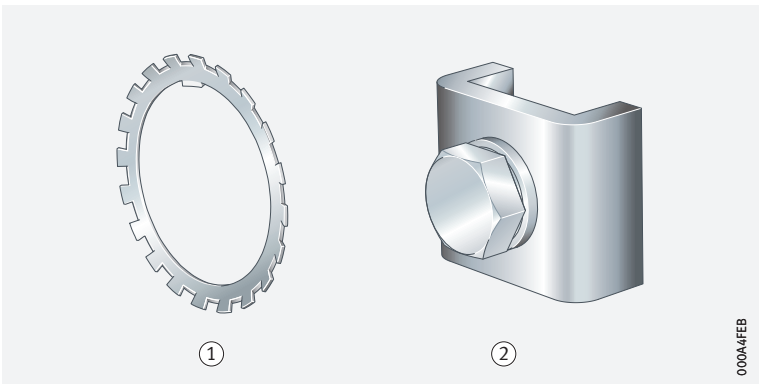

8
Retainers

① *Tab washer*
② *Retaining bracket with screw*

1.2 Load carrying capacity

Static axial load carrying capacity of locknuts and shaft nuts

The static axial load carrying capacity of locknuts and shaft nuts must not be exceeded, as this may damage the thread. In this case, operational reliability can no longer be ensured.

The values for static axial load carrying capacity have been calculated in accordance with guideline VDI 2230. The calculation assumes that the quality requirements relating to the shaft thread are met ➤*1686|1.5*.

The values for the static axial load carrying capacity of locknuts are contained in the product tables ➤*1726|*.

For information on the static axial load carrying capacity of shaft nuts HMZ, please consult Schaeffler.

1.3 Dimensions, tolerances

Adapter and withdrawal sleeves

Dimensions and material correspond to DIN 5415 for adapter sleeves, DIN 5416 for withdrawal sleeves and to ISO 2982-1.

The bore tolerance of adapter and withdrawal sleeves before splitting for a taper 1:12 is in tolerance class JS9, for a taper 1:30 in tolerance class JS7 to DIN EN ISO 286-1.

Up to a thread diameter of 200 mm, adapter and withdrawal sleeves have a metric fine pitch thread to DIN 13, tolerance class 6g to DIN ISO 965-3. Larger threads are produced as trapezoidal threads to DIN 103, tolerance zone 7e to DIN 103-3.

Withdrawal sleeves are available in designs with modified thread G. These have the suffix G.

Locknuts and shaft nuts

Dimensions and material correspond to DIN 981 and ISO 2982-2.

Up to a thread diameter of 200 mm, locknuts and shaft nuts have a metric fine pitch thread to DIN 13, tolerance class 6H to DIN ISO 965-3. Larger threads are produced as trapezoidal threads to DIN 103, tolerance zone 7H to DIN 103-3.



1.4 Suffixes

For a description of the suffixes used in this chapter ➤ *1686* | ▦ *3* to ➤ *1686* | ▦ *5* and ***medias*** interchange *https://www.schaeffler.de/std/1D52*.

▦ ***3***
Suffixes and corresponding descriptions, adapter sleeves

Suffix	Description of suffix	
HG	Hydraulic adapter sleeve with oil slots on the taper face	Standard
HGJ	Hydraulic adapter sleeve with oil slots on the taper face and in the bore	
HK	Design as for HG, but with oil connectors on the opposing axial face	
HKJ	Design as for HGJ, but with oil connectors on the opposing axial face	

▦ ***4***
Suffixes and corresponding descriptions, withdrawal sleeves

Suffix	Description of suffix	
H	Hydraulic withdrawal sleeve with oil slots on the taper face and in the bore	Standard
G	Hydraulic withdrawal sleeve with modified thread G	

▦ ***5***
Suffixes and corresponding descriptions, locknuts

Suffix	Description of suffix	
H	Locknuts with threaded holes for mounting screws	Standard
HP	Locknuts with threaded holes for mounting screws and through hole for oil connector to withdrawal sleeves ➤ *1682*	⧉ *4*	

1.5 Design of bearing arrangements

Shafts for adapter sleeves and withdrawal sleeves

✎ *Diameter tolerances*

Adapter and withdrawal sleeves adapt themselves to the shaft. Larger diameter tolerances are therefore permissible for shafts where the bearing is located using adapter sleeves or withdrawal sleeves, than in the case of a direct cylindrical seat for a bearing on the shaft.

DIN ISO

For general applications, shafts toleranced in accordance with tolerance class h9 Ⓔ to DIN EN ISO 286-1 are sufficient.

✎ *Geometrical tolerances*

The geometrical tolerances of the shafts must be tighter than the diameter tolerances since the geometrical accuracy affects the running accuracy of the bearing arrangement.

DIN ISO

The cylindricity of the shaft for shaft diameters in tolerance classes h7 or h8 should lie within tolerance zone IT5/2 to DIN EN ISO 286-1 and, for shaft diameters in tolerance class h9, within IT6/2.

Shaft thread for locknuts and shaft nuts

✎ *Thread tolerances*

Tolerance specifications must be observed for the thread on shafts that locknuts or shaft nuts are screw mounted onto.

DIN ISO

Metric shaft threads to DIN 13 must be manufactured in accordance with tolerance class 6g to ISO 965-3. Trapezoidal threads to DIN 103 must be manufactured in accordance with tolerance class 7e to DIN 103-3.

1.6 Mounting and dismounting

Adapter and withdrawal sleeves

The mounting and dismounting options for adapter and withdrawal sleeves, by hydraulic or mechanical methods, must be taken into consideration in the design of the bearing position.

Suitable mounting method dependent on the bearing size

The larger the bearing, the higher the forces that will be required for mounting. The bearing is either pressed onto the adapter or withdrawal sleeve, or the sleeve is pressed between the bearing bore and the shaft. Various mounting methods are suitable depending on the size of the bearing:

- direct application of axial mounting forces by tightening of the locknut or shaft nut ➤*1680*|*1*
- nuts with pressure screws ➤*200*|*7*
- hydraulic nuts ➤*200*|*8*
- hydraulic method, made possible through the use of hydraulic adapter or withdrawal sleeves with oil slots and oil connectors ➤*1681*|*2* and ➤*1682*|*4*

Further information on the mounting and dismounting of adapter and withdrawal sleeves is given in the introductory chapter on the mounting and dismounting of bearings ➤*194*|*10*, the chapter on spherical roller bearings ➤*699*|*1.16* and ➤*705*|*1.17*, and in the Schaeffler Mounting Handbook MH 1.

Schaeffler Mounting Handbook

Rolling bearings must be handled with great care

Rolling bearings are well-proven precision machine elements for the design of economical and reliable bearing arrangements, which offer high operational security. In order that these products can function correctly and achieve the envisaged operating life without detrimental effect, they must be handled with care.

The Schaeffler Mounting Handbook MH 1 gives comprehensive information about the correct storage, mounting, dismounting and maintenance of rotary rolling bearings *https://www.schaeffler.de/std/1D53*. It also provides information which should be observed by the designer, in relation to the mounting, dismounting and maintenance of bearings, in the original design of the bearing position. This book is available from Schaeffler on request.

1.7 Legal notice regarding data freshness

The further development of products may also result in technical changes to catalogue products

Of central interest to Schaeffler is the further development and optimisation of its products and the satisfaction of its customers. In order that you, as the customer, can keep yourself optimally informed about the progress that is being made here and with regard to the current technical status of the products, we publish any product changes which differ from the printed version in our electronic product catalogue.

We therefore reserve the right to make changes to the data and illustrations in this catalogue. This catalogue reflects the status at the time of printing. More recent publications released by us (as printed or digital media) will automatically precede this catalogue if they involve the same subject. Therefore, please always use our electronic product catalogue to check whether more up-to-date information or modification notices exist for your desired product.

Link to electronic product catalogue

The following link will take you to the Schaeffler electronic product catalogue: *https://medias.schaeffler.com*.

Adapter sleeves

With locknut and retainer

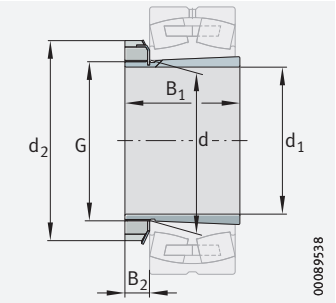

Taper 1:12
(taper 1:30 for H240, H241)
Tab washer MB

d_1 = 14 – 90 mm

Main dimensions			Mass	Designation ➤*1686|1.4*			Dimensions		
d_1	G	B_1	m ≈ kg	Adapter sleeve Complete	Locknut	Retainer	d	d_2	B_2 ≈
14	M17×1	21	0,03	**H203**	KM3	MB3	17	28	6
17	M20×1	24	0,04	**H204**	KM4	MB4	20	32	7
	M20×1	28	0,04	**H304**	KM4	MB4	20	32	7
	M20×1	31	0,05	**H2304**	KM4	MB4	20	32	7
20	M25×1,5	26	0,07	**H205**	KM5	MB5	25	38	8,25
	M25×1,5	29	0,07	**H305**	KM5	MB5	25	38	8,25
	M25×1,5	35	0,09	**H2305**	KM5	MB5	25	38	8,25
25	M30×1,5	27	0,1	**H206**	KM6	MB6	30	45	8,25
	M30×1,5	31	0,11	**H306**	KM6	MB6	30	45	8,25
	M30×1,5	38	0,13	**H2306**	KM6	MB6	30	45	8,25
30	M35×1,5	29	0,136	**H207**	KM7	MB7	35	52	9,25
	M35×1,5	35	0,153	**H307**	KM7	MB7	35	52	9,25
	M35×1,5	43	0,16	**H2307**	KM7	MB7	35	52	9,25
35	M40×1,5	31	0,177	**H208**	KM8	MB8	40	58	10,25
	M40×1,5	36	0,192	**H308**	KM8	MB8	40	58	10,25
	M40×1,5	46	0,23	**H2308**	KM8	MB8	40	58	10,25
	M40×1,5	50	0,24	**H3308**	KM8	MB8	40	58	10,25
40	M45×1,5	33	0,23	**H209**	KM9	MB9	45	65	11,25
	M45×1,5	39	0,253	**H309**	KM9	MB9	45	65	11,25
	M45×1,5	50	0,298	**H2309**	KM9	MB9	45	65	11,25
	M45×1,5	54	0,31	**H3309**	KM9	MB9	45	65	11,25
45	M50×1,5	35	0,276	**H210**	KM10	MB10	50	70	12,25
	M50×1,5	42	0,306	**H310**	KM10	MB10	50	70	12,25
	M50×1,5	55	0,36	**H2310**	KM10	MB10	50	70	12,25
	M50×1,5	60	0,39	**H3310**	KM10	MB10	50	70	12,25
50	M55×2	37	0,319	**H211**	KM11	MB11	55	75	12,5
	M55×2	45	0,358	**H311**	KM11	MB11	55	75	12,5
	M55×2	59	0,435	**H2311**	KM11	MB11	55	75	12,5
	M55×2	65	0,46	**H3311**	KM11	MB11	55	75	12,5
55	M60×2	38	0,35	**H212**	KM12	MB12	60	80	12,5
	M60×2	47	0,401	**H312**	KM12	MB12	60	80	12,5
	M60×2	62	0,493	**H2312**	KM12	MB12	60	80	12,5
	M60×2	70	0,54	**H3312**	KM12	MB12	60	80	12,5

medias *https://www.schaeffler.de/std/1F9A*

Main dimensions			Mass	Designation ➤*1686*|*1.4*			Dimensions		
d_1	G	B_1	m ≈ kg	Adapter sleeve Complete	Locknut	Retainer	d	d_2	B_2 ≈
60	M65×2	40	0,4	**H213**	KM13	MB13	65	85	13,5
	M65×2	50	0,471	**H313**	KM13	MB13	65	85	13,5
	M65×2	65	0,57	**H2313**	KM13	MB13	65	85	13,5
	M65×2	75	0,63	**H3313**	KM13	MB13	65	85	13,5
	M70×2	41	0,63	**H214**	KM14	MB14	70	92	13,5
	M70×2	52	0,74	**H314**	KM14	MB14	70	92	13,5
	M70×2	68	0,92	**H2314**	KM14	MB14	70	92	13,5
	M70×2	81	1,08	**H3314**	KM14	MB14	70	92	13,5
65	M75×2	43	0,71	**H215**	KM15	MB15	75	98	14,5
	M75×2	55	0,86	**H315**	KM15	MB15	75	98	14,5
	M75×2	73	1,06	**H2315**	KM15	MB15	75	98	14,5
	M75×2	87	1,25	**H3315**	KM15	MB15	75	98	14,5
70	M80×2	46	0,89	**H216**	KM16	MB16	80	105	16,75
	M80×2	59	1,06	**H316**	KM16	MB16	80	105	16,75
	M80×2	78	1,31	**H2316**	KM16	MB16	80	105	16,75
	M80×2	89	1,46	**H3316**	KM16	MB16	80	105	16,75
75	M85×2	50	1,03	**H217**	KM17	MB17	85	110	17,75
	M85×2	63	1,21	**H317**	KM17	MB17	85	110	17,75
	M85×2	82	1,47	**H2317**	KM17	MB17	85	110	17,75
	M85×2	95	1,68	**H3317**	KM17	MB17	85	110	17,75
80	M90×2	52	1,21	**H218**	KM18	MB18	90	120	17,75
	M90×2	65	1,41	**H318**	KM18	MB18	90	120	17,75
	M90×2	86	1,71	**H2318**	KM18	MB18	90	120	17,75
	M90×2	95	1,87	**H3318**	KM18	MB18	90	120	17,75
85	M95×2	55	1,39	**H219**	KM19	MB19	95	125	18,75
	M95×2	68	1,58	**H319**	KM19	MB19	95	125	18,75
	M95×2	90	1,95	**H2319**	KM19	MB19	95	125	18,75
	M95×2	101	2,16	**H3319**	KM19	MB19	95	125	18,75
90	M100×2	58	1,52	**H220**	KM20	MB20	100	130	19,75
	M100×2	71	1,76	**H320**	KM20	MB20	100	130	19,75
	M100×2	76	1,81	**H3120**	KM20	MB20	100	130	19,75
	M100×2	80	1,77	**H24020**	KM20	MB20	100	130	19,75
	M100×2	94	1,97	**H24120**	KM20	MB20	100	130	19,75
	M100×2	97	2,2	**H2320**	KM20	MB20	100	130	19,75
	M100×2	106	2,38	**H3320**	KM20	MB20	100	130	19,75

medias *https://www.schaeffler.de/std/1F9A*

Adapter sleeves

With locknut and retainer

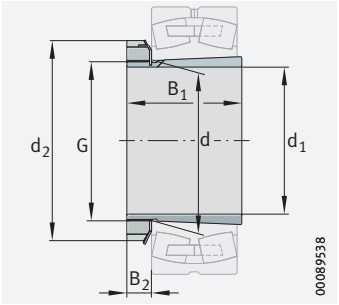

Taper 1:12
(taper 1:30 for H240, H241)
Tab washer MB, MBL

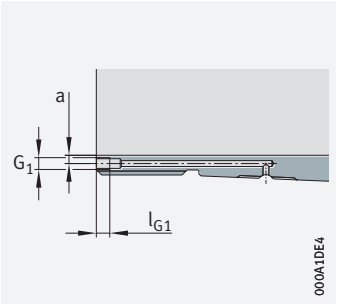

Hydraulic adapter sleeve
(suffix HG)
Mounting dimensions

d_1 = 95 – 150 mm

Main dimensions			Mass	Designation ➤1686|1.4			Dimensions		
d_1	G	B_1	m ≈ kg	Adapter sleeve Complete	Locknut	Retainer	d	d_2	B_2 ≈
95	M105×2	60	1,74	**H221**	KM21	MB21	105	140	19,75
	M105×2	74	1,97	**H321**	KM21	MB21	105	140	19,75
	M105×2	80	2,09	**H3121**	KM21	MB21	105	140	19,75
	M105×2	101	2,5	**H2321**	KM21	MB21	105	140	19,75
	M105×2	111	2,71	**H3321**	KM21	MB21	105	140	19,75
100	M110×2	63	1,95	**H222**	KM22	MB22	110	145	20,75
	M110×2	77	2,25	**H322**	KM22	MB22	110	145	20,75
	M110×2	81	2,32	**H3122**	KM22	MB22	110	145	20,75
	M110×2	90	2,3	**H24022**	KM22	MB22	110	145	20,75
	M110×2	99	2,45	**H24122**	KM22	MB22	110	145	20,75
	M110×2	105	2,78	**H2322**	KM22	MB22	110	145	20,75
	M110×2	117	3,06	**H3322**	KM22	MB22	110	145	20,75
110	M120×2	60	1,78	**H3924**	KML24	MBL24	120	145	22
	M120×2	72	2,01	**H3024**	KML24	MBL24	120	145	22
	M120×2	91	2,24	**H24024**	KML24	MBL24	120	145	22
	M120×2	88	2,7	**H3124**	KM24	MB24	120	155	22
	M120×2	111	2,92	**H24124**	KM24	MB24	120	155	22
	M120×2	112	3,24	**H2324**	KM24	MB24	120	155	22
	M120×2	132	3,77	**H3324**	KM24	MB24	120	155	22
115	M130×2	65	2,53	**H3926**	KML26	MBL26	130	155	23
	M130×2	80	2,96	**H3026**	KML26	MBL26	130	155	23
	M130×2	102	3,4	**H24026**	KML26	MBL26	130	155	23
	M130×2	92	3,74	**H3126**	KM26	MB26	130	165	23
	M130×2	113	4,08	**H24126**	KM26	MB26	130	165	23
	M130×2	121	4,69	**H2326**	KM26	MB26	130	165	23
	M130×2	139	5,35	**H3326**	KM26	MB26	130	165	23
125	M140×2	66	2,78	**H3928**	KML28	MBL28	140	165	24
	M140×2	82	3,3	**H3028**	KML28	MBL28	140	165	24
	M140×2	103	3,75	**H24028**	KML28	MBL28	140	165	24
	M140×2	97	4,46	**H3128**	KM28	MB28	140	180	24
	M140×2	119	4,81	**H24128**	KM28	MB28	140	180	24
	M140×2	131	5,66	**H2328**	KM28	MB28	140	180	24
	M140×2	147	6,32	**H3328**	KM28	MB28	140	180	24

medias *https://www.schaeffler.de/std/1F9A*

Main dimensions			Mass	Designation ➤ *1686|1.4*			Dimensions			Mounting dimensions		
d_1	G	B_1	m ≈ kg	Adapter sleeve Complete	Locknut	Retainer	d	d_2	B_2 ≈	G_1	a	l_{G1}
135	M150×2	76	3,64	**H3930**	KML30	MBL30	150	180	26	–	–	–
	M150×2	87	4,02	**H3030**	KML30	MBL30	150	180	26	–	–	–
	M150×2	112	4,61	**H24030**	KML30	MBL30	150	180	26	–	–	–
	M150×2	111	5,7	**H3130**	KM30	MB30	150	195	26	–	–	–
	M150×2	137	6,1	**H24130**	KM30	MB30	150	195	26	–	–	–
	M150×2	139	6,76	**H2330**	KM30	MB30	150	195	26	–	–	–
	M150×2	159	7,66	**H3330**	KM30	MB30	150	195	26	–	–	–
140	M160×3	78	4,75	**H3932**	KML32	MBL32	160	190	27,5	–	–	–
	M160×3	78	4,75	**H3932-HG**	KML32	MBL32	160	190	27,5	M6	4,2	7
	M160×3	93	5,44	**H3032**	KML32	MBL32	160	190	27,5	–	–	–
	M160×3	93	5,44	**H3032-HG**	KML32	MBL32	160	190	27,5	M6	4,2	7
	M160×3	118	6,27	**H24032**	KML32	MBL32	160	190	27,5	–	–	–
	M160×3	118	6,27	**H24032-HG**	KML32	MBL32	160	190	27,5	M6	4,2	7
	M160×3	119	7,81	**H3132**	KM32	MB32	160	210	27,5	–	–	–
	M160×3	119	7,81	**H3132-HG**	KM32	MB32	160	210	27,5	M6	4,2	7
	M160×3	147	9,32	**H2332**	KM32	MB32	160	210	27,5	–	–	–
	M160×3	147	9,32	**H2332-HG**	KM32	MB32	160	210	27,5	M6	4,2	7
	M160×3	148	8,66	**H24132**	KM32	MB32	160	210	27,5	–	–	–
	M160×3	148	8,66	**H24132-HG**	KM32	MB32	160	210	27,5	M6	4,2	7
	M160×3	170	10,7	**H3332**	KM32	MB32	160	210	27,5	–	–	–
	M160×3	170	10,7	**H3332-HG**	KM32	MB32	160	210	27,5	M6	4,2	7
150	M170×3	79	5,16	**H3934**	KML34	MBL34	170	200	28,5	–	–	–
	M170×3	79	5,16	**H3934-HG**	KML34	MBL34	170	200	28,5	M6	4,2	7
	M170×3	101	6,25	**H3034**	KML34	MBL34	170	200	28,5	–	–	–
	M170×3	101	6,25	**H3034-HG**	KML34	MBL34	170	200	28,5	M6	4,2	7
	M170×3	130	7,28	**H24034**	KML34	MBL34	170	200	28,5	–	–	–
	M170×3	130	7,28	**H24034-HG**	KML34	MBL34	170	200	28,5	M6	4,2	7
	M170×3	122	8,6	**H3134**	KM34	MB34	170	220	28,5	–	–	–
	M170×3	122	8,6	**H3134-HG**	KM34	MB34	170	220	28,5	M6	4,2	7
	M170×3	149	9,32	**H24134**	KM34	MB34	170	220	28,5	–	–	–
	M170×3	149	9,32	**H24134-HG**	KM34	MB34	170	220	28,5	M6	4,2	7
	M170×3	154	10,4	**H2334**	KM34	MB34	170	220	28,5	–	–	–
	M170×3	154	10,4	**H2334-HG**	KM34	MB34	170	220	28,5	M6	4,2	7
	M170×3	175	11,7	**H3334**	KM34	MB34	170	220	28,5	–	–	–
	M170×3	175	11,7	**H3334-HG**	KM34	MB34	170	220	28,5	M6	4,2	7

medias *https://www.schaeffler.de/std/1F9A*



Adapter sleeves

With locknut and retainer

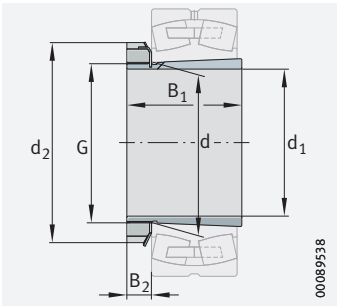

Taper 1:12
(taper 1:30 for H240, H241)
Tab washer MB, MBL

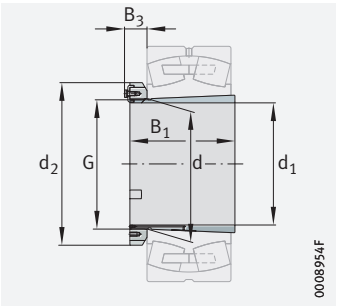

Taper 1:12
(taper 1:30 for H240)
Retaining bracket MS30

d_1 = 160 – 200 mm

Main dimensions			Mass	Designation ➤1686|1.4			Dimensions			Mounting dimensions		
d_1	G	B_1	m ≈ kg	Adapter sleeve Complete	Locknut	Retainer	d	d_2	B_2 ≈	G_1	a	l_{G1}
160	M180×3	87	6,01	**H3936**	KML36	MBL36	180	210	29,5	–	–	–
	M180×3	87	6,01	**H3936-HG**	KML36	MBL36	180	210	29,5	M6	4,2	7
	M180×3	109	7,18	**H3036**	KML36	MBL36	180	210	29,5	–	–	–
	M180×3	109	7,1	**H3036-HG**	KML36	MBL36	180	210	29,5	M6	4,2	7
	M180×3	140	8,33	**H24036**	KML36	MBL36	180	210	29,5	–	–	–
	M180×3	140	8,33	**H24036-HG**	KML36	MBL36	180	210	29,5	M6	4,2	7
	M180×3	131	9,8	**H3136**	KM36	MB36	180	230	29,5	–	–	–
	M180×3	131	9,7	**H3136-HG**	KM36	MB36	180	230	29,5	M6	4,2	7
	M180×3	159	10,5	**H24136**	KM36	MB36	180	230	29,5	–	–	–
	M180×3	159	10,5	**H24136-HG**	KM36	MB36	180	230	29,5	M6	4,2	7
	M180×3	161	11,6	**H2336**	KM36	MB36	180	230	29,5	–	–	–
	M180×3	161	11,6	**H2336-HG**	KM36	MB36	180	230	29,5	M6	4,2	7
	M180×3	186	13,3	**H3336**	KM36	MB36	180	230	29,5	–	–	–
	M180×3	186	13,3	**H3336-HG**	KM36	MB36	180	230	29,5	M6	4,2	7
170	M190×3	89	6,49	**H3938**	KML38	MBL38	190	220	30,5	–	–	–
	M190×3	89	6,49	**H3938-HG**	KML38	MBL38	190	220	30,5	M6	4,2	7
	M190×3	112	7,8	**H3038**	KML38	MBL38	190	220	30,5	–	–	–
	M190×3	112	7,8	**H3038-HG**	KML38	MBL38	190	220	30,5	M6	4,2	7
	M190×3	143	9	**H24038**	KML38	MBL38	190	220	30,5	–	–	–
	M190×3	143	9	**H24038-HG**	KML38	MBL38	190	220	30,5	M6	4,2	7
	M190×3	141	11,1	**H3138**	KM38	MB38	190	240	30,5	–	–	–
	M190×3	141	11	**H3138-HG**	KM38	MB38	190	240	30,5	M6	4,2	7
	M190×3	169	12,9	**H2338**	KM38	MB38	190	240	30,5	–	–	–
	M190×3	169	12,9	**H2338-HG**	KM38	MB38	190	240	30,5	M6	4,2	7
	M190×3	172	11,9	**H24138**	KM38	MB38	190	240	30,5	–	–	–
	M190×3	172	11,9	**H24138-HG**	KM38	MB38	190	240	30,5	M6	4,2	7
	M190×3	193	14,7	**H3338**	KM38	MB38	190	240	30,5	–	–	–
	M190×3	193	14,7	**H3338-HG**	KM38	MB38	190	240	30,5	M6	4,2	7

medias *https://www.schaeffler.de/std/1F9A*

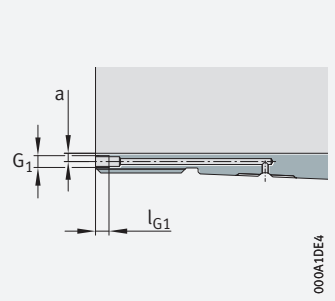

Hydraulic adapter sleeve
(suffix HG)
Mounting dimensions

Main dimensions			Mass	Designation ➤*1686|1.4*			Dimensions				Mounting dimensions		
d_1	G	B_1	m ≈ kg	Adapter sleeve Complete	Locknut	Retainer	d	d_2	B_2 ≈	B_3 ≈	G_1	a	l_{G1}
180	M200×3	98	8,2	**H3940**	KML40	MBL40	200	240	31,5	–	–	–	–
	M200×3	98	8,14	**H3940-HG**	KML40	MBL40	200	240	31,5	–	M6	4,2	7
	M200×3	120	9,5	**H3040**	KML40	MBL40	200	240	31,5	–	–	–	–
	M200×3	120	9,5	**H3040-HG**	KML40	MBL40	200	240	31,5	–	M6	4,2	7
	M200×3	153	10,9	**H24040**	KML40	MBL40	200	240	31,5	–	–	–	–
	M200×3	153	10,8	**H24040-HG**	KML40	MBL40	200	240	31,5	–	M6	4,2	7
	M200×3	150	12,5	**H3140**	KM40	MB40	200	250	31,5	–	–	–	–
	M200×3	150	12,3	**H3140-HG**	KM40	MB40	200	250	31,5	–	M6	4,2	7
	M200×3	176	14,2	**H2340**	KM40	MB40	200	250	31,5	–	–	–	–
	M200×3	176	14,2	**H2340-HG**	KM40	MB40	200	250	31,5	–	M6	4,2	7
	M200×3	185	13,4	**H24140**	KM40	MB40	200	250	31,5	–	–	–	–
	M200×3	185	13,4	**H24140-HG**	KM40	MB40	200	250	31,5	–	M6	4,2	7
	M200×3	204	16,4	**H3340**	KM40	MB40	200	250	31,5	–	–	–	–
	M200×3	204	16,4	**H3340-HG**	KM40	MB40	200	250	31,5	–	M6	4,2	7
200	Tr220×4	96	8,45	**H3944**	HM3044	MS3044	220	260	–	39	–	–	–
	Tr220×4	96	8,45	**H3944-HG**	HM3044	MS3044	220	260	–	39	M6	4,2	7
	Tr220×4	126	10,5	**H3044X**	HM3044	MS3044	220	260	–	39	–	–	–
	Tr220×4	126	10,5	**H3044X-HG**	HM3044	MS3044	220	260	–	39	M6	4,2	7
	Tr220×4	162	12,1	**H24044**	HM3044	MS3044	220	260	–	39	–	–	–
	Tr220×4	162	12,4	**H24044-HG**	HM3044	MS3044	220	260	–	39	M6	4,2	7
	Tr220×4	161	16	**H3144X**	HM44T	MB44	220	280	35	–	–	–	–
	Tr220×4	161	15,7	**H3144X-HG**	HM44T	MB44	220	280	35	–	M6	4,2	7
	Tr220×4	186	17,8	**H2344X**	HM44T	MB44	220	280	35	–	–	–	–
	Tr220×4	186	17,8	**H2344X-HG**	HM44T	MB44	220	280	35	–	M6	4,2	7
	Tr220×4	199	17,1	**H24144**	HM44T	MB44	220	280	35	–	–	–	–
	Tr220×4	199	17,3	**H24144-HG**	HM44T	MB44	220	280	35	–	M6	4,2	7
	Tr220×4	223	21,1	**H3344**	HM44T	MB44	220	280	35	–	–	–	–
	Tr220×4	223	21,4	**H3344-HG**	HM44T	MB44	220	280	35	–	M6	4,2	7

medias *https://www.schaeffler.de/std/1F9A*

Adapter sleeves

With locknut and retainer

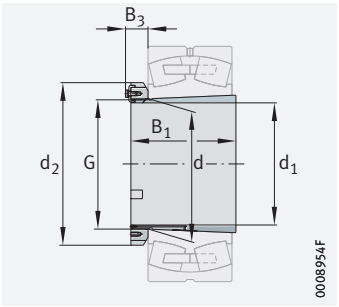

Taper 1:12
(taper 1:30 for H240, H241)
Retaining bracket MS30, MS31

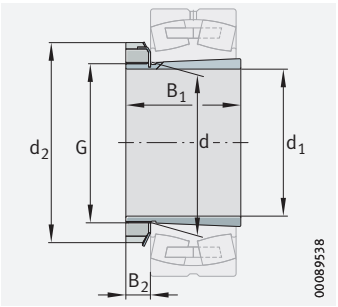

Taper 1:12
(taper 1:30 for H241)
Tab washer MB

d_1 = 220 – 300 mm

Main dimensions			Mass	Designation ➤1686|1.4			Dimensions				Mounting dimensions		
d_1	G	B_1	m ≈ kg	Adapter sleeve Complete	Locknut	Retainer	d	d_2	B_2 ≈	B_3 ≈	G_1	a	l_{G1}
220	Tr240×4	101	11,3	**H3948**	HM3048	MS3048	240	290	–	45	–	–	–
	Tr240×4	101	11,3	**H3948-HG**	HM3048	MS3048	240	290	–	45	M6	4,2	7
	Tr240×4	133	13,7	**H3048**	HM3048	MS3048	240	290	–	45	–	–	–
	Tr240×4	133	13,8	**H3048-HG**	HM3048	MS3048	240	290	–	45	M6	4,2	7
	Tr240×4	167	15,3	**H24048**	HM3048	MS3048	240	290	–	45	–	–	–
	Tr240×4	167	15,3	**H24048-HG**	HM3048	MS3048	240	290	–	45	M6	4,2	7
	Tr240×4	172	18,7	**H3148X**	HM48T	MB48	240	300	37	–	–	–	–
	Tr240×4	172	18,6	**H3148X-HG**	HM48T	MB48	240	300	37	–	M6	4,2	7
	Tr240×4	199	20,9	**H2348X**	HM48T	MB48	240	300	37	–	–	–	–
	Tr240×4	199	20,9	**H2348X-HG**	HM48T	MB48	240	300	37	–	M6	4,2	7
	Tr240×4	212	19,9	**H24148**	HM48T	MB48	240	300	37	–	–	–	–
	Tr240×4	212	19,9	**H24148-HG**	HM48T	MB48	240	300	37	–	M6	4,2	7
	Tr240×4	240	25,1	**H3348**	HM48T	MB48	240	300	37	–	–	–	–
	Tr240×4	240	25,1	**H3348-HG**	HM48T	MB48	240	300	37	–	M6	4,2	7
240	Tr260×4	116	13,6	**H3952**	HM3052	MS3048	260	310	–	45	–	–	–
	Tr260×4	116	13,6	**H3952-HG**	HM3052	MS3048	260	310	–	45	M6	4,2	7
	Tr260×4	145	16	**H3052X**	HM3052	MS3048	260	310	–	45	–	–	–
	Tr260×4	145	16	**H3052X-HG**	HM3052	MS3048	260	310	–	45	M6	4,2	7
	Tr260×4	190	18,4	**H24052**	HM3052	MS3048	260	310	–	45	–	–	–
	Tr260×4	190	18,4	**H24052-HG**	HM3052	MS3048	260	310	–	45	M6	4,2	7
	Tr260×4	190	23,5	**H3152X**	HM52T	MB52	260	330	38	–	–	–	–
	Tr260×4	190	23,6	**H3152X-HG**	HM52T	MB52	260	330	38	–	M6	4,2	7
	Tr260×4	211	25,7	**H2352X**	HM52T	MB52	260	330	38	–	–	–	–
	Tr260×4	211	25,8	**H2352X-HG**	HM52T	MB52	260	330	38	–	M6	4,2	7
	Tr260×4	235	25,2	**H24152**	HM52T	MB52	260	330	38	–	–	–	–
	Tr260×4	235	25,2	**H24152-HG**	HM52T	MB52	260	330	38	–	M6	4,2	7
	Tr260×4	253	30,5	**H3352**	HM52T	MB52	260	330	38	–	–	–	–
	Tr260×4	253	30,5	**H3352-HG**	HM52T	MB52	260	330	38	–	M6	4,2	7

medias *https://www.schaeffler.de/std/1F9A*

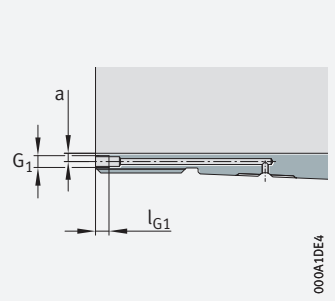

Hydraulic adapter sleeve
(suffix HG)
Mounting dimensions

Main dimensions			Mass	Designation ➤*1686*|*1.4*			Dimensions				Mounting dimensions		
d_1	G	B_1	m ≈ kg	Adapter sleeve Complete	Locknut	Retainer	d	d_2	B_2 ≈	B_3 ≈	G_1	a	l_{G1}
260	Tr280×4	121	15,6	**H3956**	HM3056	MS3056	280	330	–	49	–	–	–
	Tr280×4	121	15,6	**H3956-HG**	HM3056	MS3056	280	330	–	49	M6	4,2	7
	Tr280×4	152	18,5	**H3056**	HM3056	MS3056	280	330	–	49	–	–	–
	Tr280×4	152	18,5	**H3056-HG**	HM3056	MS3056	280	330	–	49	M6	4,2	7
	Tr280×4	195	20,9	**H24056**	HM3056	MS3056	280	330	–	49	–	–	–
	Tr280×4	195	20,7	**H24056-HG**	HM3056	MS3056	280	330	–	49	M6	4,2	7
	Tr280×4	195	26,3	**H3156X**	HM56T	MB56	280	350	39	–	–	–	–
	Tr280×4	195	26,2	**H3156X-HG**	HM56T	MB56	280	350	39	–	M6	4,2	7
	Tr280×4	224	29,8	**H2356X**	HM56T	MB56	280	350	39	–	–	–	–
	Tr280×4	224	29,8	**H2356X-HG**	HM56T	MB56	280	350	39	–	M6	4,2	7
	Tr280×4	238	28	**H24156**	HM56T	MB56	280	350	39	–	–	–	–
	Tr280×4	238	28	**H24156-HG**	HM56T	MB56	280	350	39	–	M6	4,2	7
	Tr280×4	273	36	**H3356**	HM56T	MB56	280	350	39	–	–	–	–
	Tr280×4	273	36	**H3356-HG**	HM56T	MB56	280	350	39	–	M6	4,2	7
280	Tr300×4	140	20,9	**H3960**	HM3060	MS3060	300	360	–	53	–	–	–
	Tr300×4	140	20,9	**H3960-HG**	HM3060	MS3060	300	360	–	53	M6	4,2	7
	Tr300×4	168	23,8	**H3060**	HM3060	MS3060	300	360	–	53	–	–	–
	Tr300×4	168	23,7	**H3060-HG**	HM3060	MS3060	300	360	–	53	M6	4,2	7
	Tr300×4	220	26,9	**H24060**	HM3060	MS3060	300	360	–	53	–	–	–
	Tr300×4	220	26,9	**H24060-HG**	HM3060	MS3060	300	360	–	53	M6	4,2	7
	Tr300×4	208	30,6	**H3160**	HM3160	MS3160	300	380	–	52	–	–	–
	Tr300×4	208	31,1	**H3160-HG**	HM3160	MS3160	300	380	–	52	M6	4,2	7
	Tr300×4	240	34,7	**H3260**	HM3160	MS3160	300	380	–	52	–	–	–
	Tr300×4	240	35,1	**H3260-HG**	HM3160	MS3160	300	380	–	52	M6	4,2	7
	Tr300×4	258	32,7	**H24160**	HM3160	MS3160	300	380	–	52	–	–	–
	Tr300×4	258	32,7	**H24160-HG**	HM3160	MS3160	300	380	–	52	M6	4,2	7
	Tr300×4	284	40,8	**H3360**	HM3160	MS3160	300	380	–	52	–	–	–
	Tr300×4	284	40,8	**H3360-HG**	HM3160	MS3160	300	380	–	52	M6	4,2	7
300	Tr320×5	140	22,1	**H3964-HG**	HM3064	MS3064	320	380	–	54	M6	3,5	7
	Tr320×5	171	25,7	**H3064-HG**	HM3064	MS3064	320	380	–	54	M6	3,5	7
	Tr320×5	220	28,4	**H24064-HG**	HM3064	MS3064	320	380	–	54	M6	3,5	7
	Tr320×5	226	36,2	**H3164-HG**	HM3164	MS3164	320	400	–	55	M6	3,5	7
	Tr320×5	258	40,6	**H3264-HG**	HM3164	MS3164	320	400	–	55	M6	3,5	7
	Tr320×5	278	37,4	**H24164-HG**	HM3164	MS3164	320	400	–	55	M6	3,5	7
	Tr320×5	308	47,8	**H3364-HG**	HM3164	MS3164	320	400	–	55	M6	3,5	7

medias *https://www.schaeffler.de/std/1F9A*

Adapter sleeves

With locknut and retainer

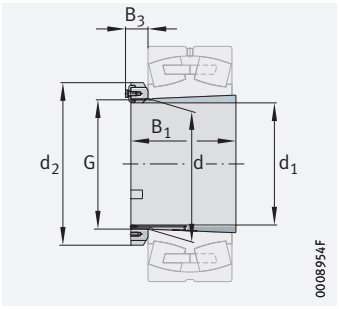

Taper 1:12
(taper 1:30 for H240, H241)
Retaining bracket MS30, MS31

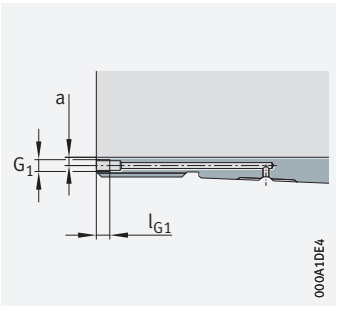

Hydraulic adapter sleeve
(suffix HG)
Mounting dimensions

d_1 = 320 – 500 mm

Main dimensions			Mass	Designation ➤1686|1.4			Dimensions			Mounting dimensions		
d_1	G	B_1	m ≈ kg	Adapter sleeve Complete	Locknut	Retainer	d	d_2	B_3 ≈	G_1	a	l_{G1}
320	Tr340×5	144	24,8	**H3968-HG**	HM3068	MS3064	340	400	57	M6	3,5	7
	Tr340×5	187	30	**H3068-HG**	HM3068	MS3064	340	400	57	M6	3,5	7
	Tr340×5	244	33,8	**H24068-HG**	HM3068	MS3064	340	400	57	M6	3,5	7
	Tr340×5	254	51,8	**H3168-HG**	HM3168	MS3168	340	440	70	M6	3,5	7
	Tr340×5	288	57,2	**H3268-HG**	HM3168	MS3168	340	440	70	M6	3,5	7
	Tr340×5	317	53	**H24168-HG**	HM3168	MS3168	340	440	70	M6	3,5	7
	Tr340×5	336	63,6	**H3368-HG**	HM3168	MS3168	340	440	70	M6	3,5	7
340	Tr360×5	144	25,9	**H3972-HG**	HM3072	MS3072	360	420	57	M6	3,5	7
	Tr360×5	188	31,6	**H3072-HG**	HM3072	MS3072	360	420	57	M6	3,5	7
	Tr360×5	244	35,6	**H24072-HG**	HM3072	MS3072	360	420	57	M6	3,5	7
	Tr360×5	259	54,3	**H3172-HG**	HM3172	MS3168	360	460	73	M6	3,5	7
	Tr360×5	299	63,8	**H3272-HG**	HM3172	MS3168	360	460	73	M6	3,5	7
	Tr360×5	321	59,9	**H24172-HG**	HM3172	MS3168	360	460	73	M6	3,5	7
	Tr360×5	357	71,8	**H3372-HG**	HM3172	MS3168	360	460	73	M6	3,5	7
360	Tr380×5	164	32,1	**H3976-HG**	HM3076	MS3076	380	450	61	M6	3,5	7
	Tr380×5	193	36,2	**H3076-HG**	HM3076	MS3076	380	450	61	M6	3,5	7
	Tr380×5	248	40,1	**H24076-HG**	HM3076	MS3076	380	450	61	M6	3,5	7
	Tr380×5	264	64,1	**H3176-HG**	HM3176	MS3176	380	490	75	M6	3,5	7
	Tr380×5	310	72,4	**H3276-HG**	HM3176	MS3176	380	490	75	M6	3,5	7
	Tr380×5	323	64,9	**H24176-HG**	HM3176	MS3176	380	490	75	M6	3,5	7
	Tr380×5	370	82,8	**H3376-HG**	HM3176	MS3176	380	490	75	M6	3,5	7
380	Tr400×5	168	35,4	**H3980-HG**	HM3080	MS3076	400	470	65	M6	3,5	7
	Tr400×5	210	41,7	**H3080-HG**	HM3080	MS3076	400	470	65	M6	3,5	7
	Tr400×5	272	46,4	**H24080-HG**	HM3080	MS3076	400	470	65	M6	3,5	7
	Tr400×5	272	71,3	**H3180-HG**	HM3180	MS3180	400	520	80	M6	3,5	7
	Tr400×5	328	83,7	**H3280-HG**	HM3180	MS3180	400	520	80	M6	3,5	7
	Tr400×5	332	73,8	**H24180-HG**	HM3180	MS3180	400	520	80	M6	3,5	7
	Tr400×5	380	93,4	**H3380-HG**	HM3180	MS3180	400	520	80	M6	3,5	7
400	Tr420×5	168	38,6	**H3984-HG**	HM3084	MS3084	420	490	65	M6	3,5	7
	Tr420×5	212	45,7	**H3084X-HG**	HM3084	MS3084	420	490	65	M6	3,5	7
	Tr420×5	274	48,6	**H24084-HG**	HM3084	MS3084	420	490	65	M6	3,5	7
	Tr420×5	304	88,4	**H3184-HG**	HM3184	MS3180	420	540	88	M6	3,5	7
	Tr420×5	352	98,7	**H3284-HG**	HM3184	MS3180	420	540	88	M6	3,5	7
	Tr420×5	372	87,8	**H24184-HG**	HM3184	MS3180	420	540	88	M6	3,5	7
	Tr420×5	395	105	**H3384-HG**	HM3184	MS3180	420	540	88	M6	3,5	7

medias *https://www.schaeffler.de/std/1F9A*

Main dimensions			Mass	Designation ➤*1686|1.4*			Dimensions			Mounting dimensions		
d_1	G	B_1	m ≈ kg	Adapter sleeve Complete	Locknut	Retainer	d	d_2	B_3 ≈	G_1	a	l_{G1}
410	Tr440×5	189	59	**H3988-HG**	HM3088	MS3088	440	520	75	M8	6,5	12
	Tr440×5	228	67,7	**H3088-HG**	HM3088	MS3088	440	520	75	M8	6,5	12
	Tr440×5	294	76,4	**H24088-HG**	HM3088	MS3088	440	520	75	M8	6,5	12
	Tr440×5	307	108	**H3188-HG**	HM3188	MS3188	440	560	88	M8	6,5	12
	Tr440×5	361	123	**H3288-HG**	HM3188	MS3188	440	560	88	M8	6,5	12
	Tr440×5	372	111	**H24188-HG**	HM3188	MS3188	440	560	88	M8	6,5	12
	Tr440×5	426	140	**H3388-HG**	HM3188	MS3188	440	560	88	M8	6,5	12
430	Tr460×5	189	62,4	**H3992-HG**	HM3092	MS3088	460	540	75	M8	6,5	12
	Tr460×5	234	71,8	**H3092-HG**	HM3092	MS3088	460	540	75	M8	6,5	12
	Tr460×5	300	80,8	**H24092-HG**	HM3092	MS3088	460	540	75	M8	6,5	12
	Tr460×5	326	118	**H3192-HG**	HM3192	MS3188	460	580	93	M8	6,5	12
	Tr460×5	382	138,9	**H3292-HG**	HM3192	MS3188	460	580	93	M8	6,5	12
	Tr460×5	398	124	**H24192-HG**	HM3192	MS3188	460	580	93	M8	6,5	12
	Tr460×5	451	157	**H3392-HG**	HM3192	MS3188	460	580	93	M8	6,5	12
450	Tr480×5	200	66,8	**H3996-HG**	HM3096	MS3096	480	560	75	M8	6,5	12
	Tr480×5	237	76,8	**H3096-HG**	HM3096	MS3096	480	560	75	M8	6,5	12
	Tr480×5	301	85,6	**H24096-HG**	HM3096	MS3096	480	560	75	M8	6,5	12
	Tr480×5	335	135	**H3196-HG**	HM3196	MS3196	480	620	93	M8	6,5	12
	Tr480×5	397	159,2	**H3296-HG**	HM3196	MS3196	480	620	93	M8	6,5	12
	Tr480×5	408	142	**H24196-HG**	HM3196	MS3196	480	620	93	M8	6,5	12
	Tr480×5	462	177	**H3396-HG**	HM3196	MS3196	480	620	93	M8	6,5	12
470	Tr500×5	208	76,1	**H39/500-HG**	HM30/500	MS3096	500	580	83	M8	6,5	12
	Tr500×5	247	85,2	**H30/500-HG**	HM30/500	MS3096	500	580	83	M8	6,5	12
	Tr500×5	309	93,8	**H240/500-HG**	HM30/500	MS3096	500	580	83	M8	6,5	12
	Tr500×5	356	149,9	**H31/500-HG**	HM31/500	MS31/500	500	630	98	M8	6,5	12
	Tr500×5	428	174,5	**H32/500-HG**	HM31/500	MS31/500	500	630	98	M8	6,5	12
	Tr500×5	430	155,8	**H241/500-HG**	HM31/500	MS31/500	500	630	98	M8	6,5	12
	Tr500×5	480	189	**H33/500-HG**	HM31/500	MS31/500	500	630	98	M8	6,5	12
500	Tr530×6	216	91,6	**H39/530-HG**	HM30/530	MS30/530	530	630	88	M8	6	12
	Tr530×6	265	103	**H30/530-HG**	HM30/530	MS30/530	530	630	88	M8	6	12
	Tr530×6	343	115	**H240/530-HG**	HM30/530	MS30/530	530	630	88	M8	6	12
	Tr530×6	364	161	**H31/530-HG**	HM31/530	MS31/530	530	670	102	M8	6	12
	Tr530×6	440	167	**H241/530-HG**	HM31/530	MS31/530	530	670	102	M8	6	12
	Tr530×6	447	192	**H32/530-HG**	HM31/530	MS31/530	530	670	102	M8	6	12
	Tr530×6	504	215	**H33/530-HG**	HM31/530	MS31/530	530	670	102	M8	6	12

medias *https://www.schaeffler.de/std/1F9A*

Adapter sleeves

With locknut and retainer

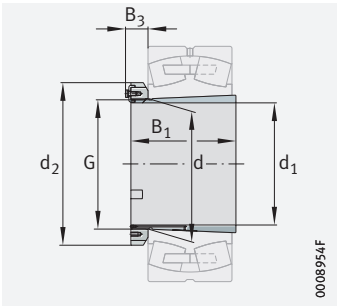

Taper 1:12
(taper 1:30 for H240, H241)
Retaining bracket MS30, MS31

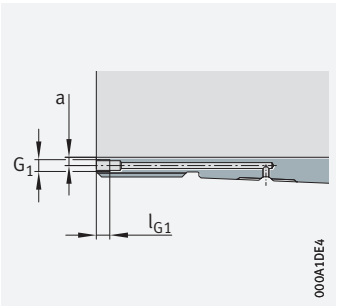

Hydraulic adapter sleeve
(suffix HG)
Mounting dimensions

d_1 = 530 – 900 mm

Main dimensions			Mass	Designation ➤ *1686|1.4*			Dimensions			Mounting dimensions		
d_1	G	B_1	m ≈ kg	Adapter sleeve Complete	Locknut	Retainer	d	d_2	B_3 ≈	G_1	a	l_{G1}
530	Tr560×6	227	98,5	**H39/560-HG**	HM30/560	MS30/560	560	650	95	M8	6	12
	Tr560×6	282	112	**H30/560-HG**	HM30/560	MS30/560	560	650	95	M8	6	12
	Tr560×6	358	124	**H240/560-HG**	HM30/560	MS30/560	560	650	95	M8	6	12
	Tr560×6	377	184	**H31/560-HG**	HM31/560	MS31/560	560	710	107	M8	6	12
	Tr560×6	462	218	**H32/560-HG**	HM31/560	MS31/560	560	710	107	M8	6	12
	Tr560×6	468	195	**H241/560-HG**	HM31/560	MS31/560	560	710	107	M8	6	12
	Tr560×6	535	250	**H33/560-HG**	HM31/560	MS31/560	560	710	107	M8	6	12
560	Tr600×6	239	132,2	**H39/600-HG**	HM30/600	MS30/530	600	700	95	$G^1/_8$	8	12
	Tr600×6	289	152,3	**H30/600-HG**	HM30/600	MS30/530	600	700	95	$G^1/_8$	8	12
	Tr600×6	377	171	**H240/600-HG**	HM30/600	MS30/530	600	700	95	$G^1/_8$	8	12
	Tr600×6	399	241,8	**H31/600-HG**	HM31/600	MS31/560	600	750	108	$G^1/_8$	8	12
	Tr600×6	487	279	**H32/600-HG**	HM31/600	MS31/560	600	750	108	$G^1/_8$	8	12
	Tr600×6	490	249	**H241/600-HG**	HM31/600	MS31/560	600	750	108	$G^1/_8$	8	12
	Tr600×6	561	320	**H33/600-HG**	HM31/600	MS31/560	600	750	108	$G^1/_8$	8	12
600	Tr630×6	254	126,3	**H39/630-HG**	HM30/630	MS30/630	630	730	95	M8	6	12
	Tr630×6	301	143,1	**H30/630-HG**	HM30/630	MS30/630	630	730	95	M8	6	12
	Tr630×6	395	157	**H240/630-HG**	HM30/630	MS30/630	630	730	95	M8	6	12
	Tr630×6	424	261,9	**H31/630-HG**	HM31/630	MS31/630	630	800	118	M8	6	12
	Tr630×6	521	297	**H32/630-HG**	HM31/630	MS31/630	630	800	118	M8	6	12
	Tr630×6	525	273,1	**H241/630-HG**	HM31/630	MS31/630	630	800	118	M8	6	12
	Tr630×6	597	338	**H33/630-HG**	HM31/630	MS31/630	630	800	118	M8	6	12
630	Tr670×6	264	166	**H39/670-HG**	HM30/670	MS30/670	670	780	101	$G^1/_8$	8	12
	Tr670×6	324	194	**H30/670-HG**	HM30/670	MS30/670	670	780	101	$G^1/_8$	8	12
	Tr670×6	418	218	**H240/670-HG**	HM30/670	MS30/670	670	780	101	$G^1/_8$	8	12
	Tr670×6	456	353,3	**H31/670-HG**	HM31/670	MS31/670	670	850	129	$G^1/_8$	8	12
	Tr670×6	548	355	**H241/670-HG**	HM31/670	MS31/670	670	850	129	$G^1/_8$	8	12
	Tr670×6	558	402	**H32/670-HG**	HM31/670	MS31/670	670	850	129	$G^1/_8$	8	12
	Tr670×6	635	453	**H33/670-HG**	HM31/670	MS31/670	670	850	129	$G^1/_8$	8	12
670	Tr710×7	286	206	**H39/710-HG**	HM30/710	MS30/710	710	830	110	$G^1/_8$	8	12
	Tr710×7	342	234,2	**H30/710-HG**	HM30/710	MS30/710	710	830	110	$G^1/_8$	8	12
	Tr710×7	438	254	**H240/710-HG**	HM30/710	MS30/710	710	830	110	$G^1/_8$	8	12
	Tr710×7	467	376	**H31/710-HG**	HM31/710	MS31/710	710	900	132	$G^1/_8$	8	12
	Tr710×7	572	444	**H32/710-HG**	HM31/710	MS31/710	710	900	132	$G^1/_8$	8	12
	Tr710×7	577	412,1	**H241/710-HG**	HM31/710	MS31/710	710	900	132	$G^1/_8$	8	12
	Tr710×7	652	501	**H33/710-HG**	HM31/710	MS31/710	710	900	132	$G^1/_8$	8	12

medias *https://www.schaeffler.de/std/1F9A*

Main dimensions			Mass	Designation ➤1686|1.4			Dimensions			Mounting dimensions		
d_1	G	B_1	m ≈ kg	Adapter sleeve Complete	Locknut	Retainer	d	d_2	B_3 ≈	G_1	a	l_{G1}
710	Tr750×7	291	219,6	**H39/750-HG**	HM30/750	MS30/750	750	870	110	$G^1/_8$	8	12
	Tr750×7	356	248	**H30/750-HG**	HM30/750	MS30/750	750	870	110	$G^1/_8$	8	12
	Tr750×7	460	278	**H240/750-HG**	HM30/750	MS30/750	750	870	110	$G^1/_8$	8	12
	Tr750×7	493	432	**H31/750-HG**	HM31/750	MS31/750	750	950	137	$G^1/_8$	8	12
	Tr750×7	603	508	**H32/750-HG**	HM31/750	MS31/750	750	950	137	$G^1/_8$	8	12
	Tr750×7	622	461	**H241/750-HG**	HM31/750	MS31/750	750	950	137	$G^1/_8$	8	12
	Tr750×7	688	574	**H33/750-HG**	HM31/750	MS31/750	750	950	137	$G^1/_8$	8	12
750	Tr800×7	303	268,9	**H39/800-HG**	HM30/800	MS30/750	800	920	110	$G^1/_8$	10	12
	Tr800×7	366	311,6	**H30/800-HG**	HM30/800	MS30/750	800	920	110	$G^1/_8$	10	12
	Tr800×7	475	349	**H240/800-HG**	HM30/800	MS30/750	800	920	110	$G^1/_8$	10	12
	Tr800×7	505	515	**H31/800-HG**	HM31/800	MS31/750	800	1 000	137	$G^1/_8$	10	12
	Tr800×7	618	611	**H32/800-HG**	HM31/800	MS31/750	800	1 000	137	$G^1/_8$	10	12
	Tr800×7	627	552	**H241/800-HG**	HM31/800	MS31/750	800	1 000	137	$G^1/_8$	10	12
	Tr800×7	730	716	**H33/800-HG**	HM31/800	MS31/750	800	1 000	137	$G^1/_8$	10	12
800	Tr850×7	308	298,5	**H39/850-HG**	HM30/850	MS30/850	850	980	113	$G^1/_8$	10	12
	Tr850×7	380	350,8	**H30/850-HG**	HM30/850	MS30/850	850	980	113	$G^1/_8$	10	12
	Tr850×7	495	393	**H240/850-HG**	HM30/850	MS30/850	850	980	113	$G^1/_8$	10	12
	Tr850×7	536	590	**H31/850-HG**	HM31/850	MS31/850	850	1 060	144	$G^1/_8$	10	12
	Tr850×7	651	696	**H32/850-HG**	HM31/850	MS31/850	850	1 060	144	$G^1/_8$	10	12
	Tr850×7	658	650,2	**H241/850-HG**	HM31/850	MS31/850	850	1 060	144	$G^1/_8$	10	12
	Tr850×7	766	814	**H33/850-HG**	HM31/850	MS31/850	850	1 060	144	$G^1/_8$	10	12
850	Tr900×7	326	335	**H39/900-HG**	HM30/900	MS30/850	900	1 030	122	$G^1/_8$	10	12
	Tr900×7	400	392	**H30/900-HG**	HM30/900	MS30/850	900	1 030	122	$G^1/_8$	10	12
	Tr900×7	520	446	**H240/900-HG**	HM30/900	MS30/850	900	1 030	122	$G^1/_8$	10	12
	Tr900×7	557	674	**H31/900-HG**	HM31/900	MS31/900	900	1 120	150	$G^1/_8$	10	12
	Tr900×7	660	775	**H32/900-HG**	HM31/900	MS31/900	900	1 120	150	$G^1/_8$	10	12
	Tr900×7	685	712	**H241/900-HG**	HM31/900	MS31/900	900	1 120	150	$G^1/_8$	10	12
	Tr900×7	795	923	**H33/900-HG**	HM31/900	MS31/900	900	1 120	150	$G^1/_8$	10	12
900	Tr950×8	344	369	**H39/950-HG**	HM30/950	MS30/950	950	1 080	122	$G^1/_8$	10	12
	Tr950×8	420	432	**H30/950-HG**	HM30/950	MS30/950	950	1 080	122	$G^1/_8$	10	12
	Tr950×8	557	499	**H240/950-HG**	HM30/950	MS30/950	950	1 080	122	$G^1/_8$	10	12
	Tr950×8	583	738	**H31/950-HG**	HM31/950	MS31/950	950	1 170	151	$G^1/_8$	10	12
	Tr950×8	675	835	**H32/950-HG**	HM31/950	MS31/950	950	1 170	151	$G^1/_8$	10	12
	Tr950×8	715	804,8	**H241/950-HG**	HM31/950	MS31/950	950	1 170	151	$G^1/_8$	10	12
	Tr950×8	815	1 000	**H33/950-HG**	HM31/950	MS31/950	950	1 170	151	$G^1/_8$	10	12

medias *https://www.schaeffler.de/std/1F9A*



Adapter sleeves

With locknut and retainer

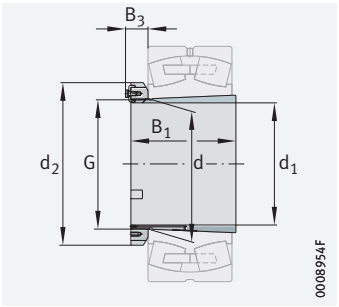

Taper 1:12
(taper 1:30 for H240, H241)
Retaining bracket MS30, MS31

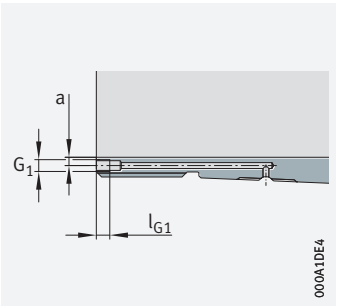

Hydraulic adapter sleeve
(suffix HG)
Mounting dimensions

d_1 = 950 – 1 600 mm

Main dimensions			Mass	Designation ➤*1686|1.4*			Dimensions			Mounting dimensions		
d_1	G	B_1	m ≈ kg	Adapter sleeve Complete	Locknut	Retainer	d	d_2	B_3 ≈	G_1	a	l_{G1}
950	Tr1000×8	358	410	**H39/1000-HG**	HM30/1000	MS30/1000	1 000	1 140	122	$G^1/_8$	10	12
	Tr1000×8	430	474	**H30/1000-HG**	HM30/1000	MS30/1000	1 000	1 140	122	$G^1/_8$	10	12
	Tr1000×8	562	539	**H240/1000-HG**	HM30/1000	MS30/1000	1 000	1 140	122	$G^1/_8$	10	12
	Tr1000×8	609	840	**H31/1000-HG**	HM31/1000	MS31/1000	1 000	1 240	151	$G^1/_8$	10	12
	Tr1000×8	707	952	**H32/1000-HG**	HM31/1000	MS31/1000	1 000	1 240	151	$G^1/_8$	10	12
	Tr1000×8	755	886	**H241/1000-HG**	HM31/1000	MS31/1000	1 000	1 240	151	$G^1/_8$	10	12
	Tr1000×8	857	1 140	**H33/1000-HG**	HM31/1000	MS31/1000	1 000	1 240	151	$G^1/_8$	10	12
1 000	Tr1060×8	372	493	**H39/1060-HG**	HM30/1060	MS30/1000	1 060	1 200	122	$G^1/_4$	12	15
	Tr1060×8	447	574	**H30/1060-HG**	HM30/1060	MS30/1000	1 060	1 200	122	$G^1/_4$	12	15
	Tr1060×8	588	665	**H240/1060-HG**	HM30/1060	MS30/1000	1 060	1 200	122	$G^1/_4$	12	15
	Tr1060×8	622	985	**H31/1060-HG**	HM31/1060	MS31/1000	1 060	1 300	151	$G^1/_4$	12	15
	Tr1060×8	775	1 060	**H241/1060-HG**	HM31/1060	MS31/1000	1 060	1 300	151	$G^1/_4$	12	15
1 060	Tr1120×8	372	521	**H39/1120-HG**	HM30/1120	MS30/1000	1 120	1 260	122	$G^1/_4$	12	15
	Tr1120×8	467	631	**H30/1120-HG**	HM30/1120	MS30/1000	1 120	1 260	122	$G^1/_4$	12	15
	Tr1120×8	612	728	**H240/1120-HG**	HM30/1120	MS30/1000	1 120	1 260	122	$G^1/_4$	12	15
	Tr1120×8	622	1 060	**H31/1120-HG**	HM31/1120	MS31/1000	1 120	1 360	151	$G^1/_4$	12	15
	Tr1120×8	805	1 170	**H241/1120-HG**	HM31/1120	MS31/1000	1 120	1 360	151	$G^1/_4$	13	15
1 120	Tr1180×8	394	576	**H39/1180-HG**	HM30/1180	MS30/1000	1 180	1 320	122	$G^1/_4$	12	15
	Tr1180×8	479	682	**H30/1180-HG**	HM30/1180	MS30/1000	1 180	1 320	122	$G^1/_4$	12	15
	Tr1180×8	625	782	**H240/1180-HG**	HM30/1180	MS30/1000	1 180	1 320	122	$G^1/_4$	12	15
	Tr1180×8	647	1 160	**H31/1180-HG**	HM31/1180	MS31/1000	1 180	1 420	151	$G^1/_4$	12	15
	Tr1180×8	845	1 290	**H241/1180-HG**	HM31/1180	MS31/1000	1 180	1 420	151	$G^1/_4$	13	15
1 180	Tr1250×8	407	708	**H39/1250-HG**	HM30/1250	MS30/1000	1 250	1 390	132	$G^1/_4$	14	15
	Tr1250×8	509	858	**H30/1250-HG**	HM30/1250	MS30/1000	1 250	1 390	132	$G^1/_4$	15	15
	Tr1250×8	660	988	**H240/1250-HG**	HM30/1250	MS30/1000	1 250	1 390	132	$G^1/_4$	14	15
	Tr1250×8	677	1 380	**H31/1250-HG**	HM31/1250	MS31/1000	1 250	1 490	151	$G^1/_4$	14	15
	Tr1250×8	885	1 549,6	**H241/1250-HG**	HM31/1250	MS31/1000	1 250	1 490	151	$G^1/_4$	14	15
1 250	Tr1320×8	430	781	**H39/1320-HG**	HM30/1320	MS30/1000	1 320	1 460	132	$G^1/_4$	14	15
	Tr1320×8	534	946	**H30/1320-HG**	HM30/1320	MS30/1000	1 320	1 460	132	$G^1/_4$	15	15
	Tr1320×8	690	1 080	**H240/1320-HG**	HM30/1320	MS30/1000	1 320	1 460	132	$G^1/_4$	14	15
	Tr1320×8	710	1 510	**H31/1320-HG**	HM31/1320	MS31/1000	1 320	1 560	151	$G^1/_4$	14	15
	Tr1320×8	935	1 700	**H241/1320-HG**	HM31/1320	MS31/1000	1 320	1 560	151	$G^1/_4$	14	15

medias *https://www.schaeffler.de/std/1F9A*

Main dimensions			Mass	Designation ➤*1686|1.4*			Dimensions			Mounting dimensions		
d_1	G	B_1	m ≈ kg	Adapter sleeve Complete	Locknut	Retainer	d	d_2	B_3 ≈	G_1	a	l_{G1}
1 320	Tr1400×8	445	924	**H39/1400-HG**	HM30/1400	MS30/1000	1 400	1 540	132	$G^1/_4$	15	15
	Tr1400×8	546	1 110	**H30/1400-HG**	HM30/1400	MS30/1000	1 400	1 540	132	$G^1/_4$	15	15
	Tr1400×8	705	1 290	**H240/1400-HG**	HM30/1400	MS30/1000	1 400	1 540	132	$G^1/_4$	14	15
	Tr1400×8	735	1 790	**H31/1400-HG**	HM31/1400	MS31/1000	1 400	1 640	156	$G^1/_4$	15	15
	Tr1400×8	965	2 030	**H241/1400-HG**	HM31/1400	MS31/1000	1 400	1 640	156	$G^1/_4$	15	15
1 400	Tr1500×8	465	1 210	**H39/1500-HG**	HM30/1500	MS30/1500	1 500	1 650	132	$G^1/_4$	15	15
	Tr1500×8	600	1 530	**H30/1500-HG**	HM30/1500	MS30/1500	1 500	1 650	132	$G^1/_4$	15	15
	Tr1500×8	775	1 790	**H240/1500-HG**	HM30/1500	MS30/1500	1 500	1 650	132	$G^1/_4$	14	15
	Tr1500×8	755	2 230	**H31/1500-HG**	HM31/1500	MS31/1000	1 500	1 740	156	$G^1/_4$	15	15
	Tr1500×8	990	2 560	**H241/1500-HG**	HM31/1500	MS31/1000	1 500	1 740	156	$G^1/_4$	15	15
1 500	Tr1600×8	465	2 480	**H39/1600-HG**	Z-195077.01.HM	MS30/850	1 600	1 730	112	$G^1/_4$	15	15
1 600	Tr1700×8	475	2 620	**H39/1700-HG**	Z-195078.01.HM	MS30/850	1 700	1 830	112	$G^1/_4$	15	15

medias *https://www.schaeffler.de/std/1F9A*



Withdrawal sleeves

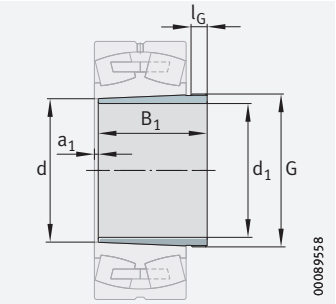

Taper 1:12
(taper 1:30 for AH240, AH241)

d_1 = 35 – 95 mm

Main dimensions			Mass	Designation	Dimensions		
d_1	G	B_1	m ≈ kg	➤*1686|1.4*	d	a_1 ≈	l_G
35	M45×1,5	25	0,08	**AH208**	40	2	6
	M45×1,5	29	0,09	**AH308**	40	3	6
	M45×1,5	40	0,13	**AH2308**	40	3	7
	M45×1,5	44	0,15	**AH3308**	40	3	7
40	M50×1,5	26	0,09	**AH209**	45	3	6
	M50×1,5	31	0,11	**AH309**	45	3	6
	M50×1,5	44	0,17	**AH2309**	45	3	7
	M50×1,5	47	0,18	**AH3309**	45	3	7
45	M55×2	28	0,12	**AH210**	50	3	7
	M55×2	35	0,14	**AHX310**	50	3	7
	M55×2	50	0,22	**AHX2310**	50	3	9
	M55×2	54	0,24	**AH3310**	50	3	9
50	M60×2	29	0,13	**AH211**	55	3	7
	M60×2	37	0,17	**AHX311**	55	3	7
	M60×2	54	0,26	**AHX2311**	55	3	10
	M60×2	60	0,3	**AH3311**	55	3	10
55	M65×2	32	0,16	**AH212**	60	3	8
	M65×2	40	0,2	**AHX312**	60	3	8
	M65×2	58	0,32	**AHX2312**	60	3	11
	M70×2	65	0,41	**AH3312**	60	3	11
60	M75×2	33	0,21	**AH213**	65	4	8
	M70×2	33	0,18	**AH213G**	65	4	8
	M75×2	42	0,27	**AH313**	65	3	8
	M70×2	42	0,23	**AH313G**	65	3	8
	M75×2	61	0,42	**AH2313**	65	3	12
	M70×2	61	0,36	**AH2313G**	65	3	12
	M75×2	71	0,49	**AH3313**	65	3	12
65	M80×2	34	0,23	**AH214**	70	4	8
	M75×2	34	0,2	**AH214G**	70	4	8
	M80×2	43	0,29	**AH314**	70	4	8
	M75×2	43	0,26	**AH314G**	70	4	8
	M80×2	64	0,47	**AHX2314**	70	4	12
	M75×2	64	0,42	**AHX2314G**	70	4	12
	M80×2	76	0,57	**AH3314**	70	4	12

medias *https://www.schaeffler.de/std/1F9A*

Main dimensions			Mass	Designation	Dimensions		
d_1	G	B_1	m ≈ kg	➤*1686|1.4*	d	a_1 ≈	l_G
70	M85×2	35	0,26	**AH215**	75	4	8
	M80×2	35	0,22	**AH215G**	75	4	8
	M85×2	45	0,33	**AH315**	75	4	8
	M80×2	45	0,29	**AH315G**	75	4	8
	M85×2	68	0,54	**AHX2315**	75	4	12
	M80×2	68	0,48	**AHX2315G**	75	4	12
	M85×2	81	0,66	**AH3315**	75	4	12
75	M90×2	36	0,28	**AH216**	80	4	8
	M90×2	48	0,38	**AH316**	80	4	8
	M90×2	71	0,61	**AHX2316**	80	4	12
	M90×2	81	0,71	**AH3316**	80	4	12
80	M95×2	39	0,33	**AH217**	85	4	9
	M95×2	52	0,44	**AHX317**	85	4	9
	M95×2	60	0,52	**AH3217**	85	4	10
	M95×2	74	0,68	**AHX2317**	85	4	13
	M95×2	86	0,81	**AH3317**	85	4	13
85	M100×2	40	0,36	**AH218**	90	4	9
	M100×2	53	0,48	**AHX318**	90	4	9
	M100×2	63	0,58	**AHX3218**	90	4	10
	M100×2	79	0,78	**AHX2318**	90	4	14
	M100×2	87	0,88	**AH3318**	90	4	14
90	M105×2	43	0,42	**AH219**	95	4	10
	M105×2	57	0,55	**AHX319**	95	4	10
	M105×2	67	0,67	**AHX3219**	95	4	11
	M105×2	85	0,91	**AHX2319**	95	4	16
	M105×2	94	1,03	**AH3319**	95	4	16
95	M110×2	45	0,46	**AH220**	100	4	10
	M110×2	59	0,6	**AHX320**	100	4	10
	M105×2	62	0,5	**AH24020**	100	9	12
	M110×2	64	0,67	**AHX3120**	100	4	11
	M110×2	73	0,78	**AHX3220**	100	4	11
	M105×2	78	0,63	**AH24120**	100	9	13
	M110×2	90	1,03	**AHX2320**	100	4	16
	M110×2	99	1,16	**AH3320**	100	4	16

medias *https://www.schaeffler.de/std/1F9A*



Withdrawal sleeves

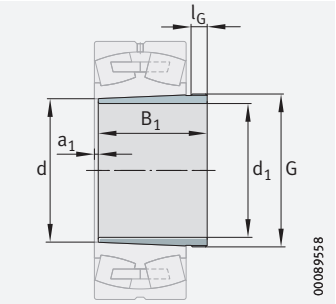

Taper 1:12
(taper 1:30 for AH240, AH241)

d_1 = 105 – 145 mm

Main dimensions			Mass	Designation	Dimensions		
d_1	G	B_1	m ≈ kg	➤ *1686|1.4*	d	a_1 ≈	l_G
105	M120×2	50	0,57	**AH222**	110	4	11
	M120×2	63	0,73	**AHX322**	110	4	12
	M120×2	68	0,79	**AHX3122**	110	4	11
	M115×2	73	0,65	**AH24022**	110	9	13
	M115×2	82	0,73	**AH24122**	110	9	13
	M120×2	82	0,98	**AHX3222A**	110	4	11
	M125×2	98	1,38	**AHX2322**	110	4	16
	M120×2	98	1,26	**AHX2322G**	110	4	16
	M125×2	108	1,54	**AH3322**	110	4	16
115	M130×2	53	0,67	**AH224**	120	4	12
	M130×2	60	0,77	**AHX3024**	120	4	13
	M130×2	69	0,89	**AHX324**	120	4	13
	M125×2	73	0,71	**AH24024**	120	9	13
	M130×2	75	0,97	**AHX3124**	120	4	12
	M130×2	90	1,22	**AHX3224A**	120	4	13
	M130×2	93	1,02	**AH24124**	120	9	13
	M135×2	105	1,64	**AHX2324**	120	4	17
	M130×2	105	1,5	**AHX2324G**	120	4	17
	M135×2	123	1,99	**AH3324**	120	4	17
125	M140×2	53	0,72	**AH226**	130	4	12
	M140×2	67	0,94	**AHX3026**	130	4	14
	M140×2	74	1,05	**AHX326**	130	4	14
	M140×2	78	1,1	**AHX3126**	130	4	12
	M135×2	83	0,89	**AH24026**	130	10	14
	M140×2	94	1,13	**AH24126**	130	10	14
	M145×2	98	1,61	**AHX3226**	130	4	15
	M140×2	98	1,48	**AHX3226G**	130	4	15
	M145×2	115	2	**AHX2326**	130	4	19
	M140×2	115	1,84	**AHX2326G**	130	4	19
	M145×2	131	2,36	**AH3326**	130	4	19

medias *https://www.schaeffler.de/std/1F9A*

Main dimensions			Mass	Designation	Dimensions		
d_1	G	B_1	m ≈ kg	➤*1686|1.4*	d	a_1 ≈	l_G
135	M150×2	56	0,83	**AH228**	140	5	13
	M150×2	68	1,03	**AHX3028**	140	5	14
	M150×2	77	1,18	**AHX328**	140	5	14
	M145×2	83	0,96	**AH24028**	140	10	14
	M150×2	83	1,29	**AHX3128**	140	5	14
	M150×2	99	1,29	**AH24128**	140	10	14
	M155×3	104	1,86	**AHX3228**	140	5	15
	M150×2	104	1,72	**AHX3228G**	140	5	15
	M155×3	125	2,4	**AHX2328**	140	5	20
	M150×2	125	2,21	**AHX2328G**	140	5	20
	M155×3	138	2,72	**AH3328**	140	5	20
145	M160×3	60	0,97	**AH230**	150	5	14
	M160×3	72	1,18	**AHX3030**	150	5	15
	M165×3	83	1,54	**AHX330**	150	5	15
	M160×3	83	1,39	**AHX330G**	150	5	15
	M155×3	90	1,12	**AH24030**	150	11	15
	M165×3	96	1,81	**AHX3130**	150	5	15
	M160×3	96	1,66	**AHX3130G**	150	5	15
	M165×3	114	2,25	**AHX3230**	150	5	17
	M160×3	114	2,09	**AHX3230G**	150	5	17
	M160×3	115	1,63	**AH24130**	150	11	15
	M165×3	135	2,88	**AHX2330**	150	5	24
	M160×3	135	2,64	**AHX2330G**	150	5	24
	M165×3	152	3,36	**AH3330**	150	5	24

medias *https://www.schaeffler.de/std/1F9A*



Withdrawal sleeves

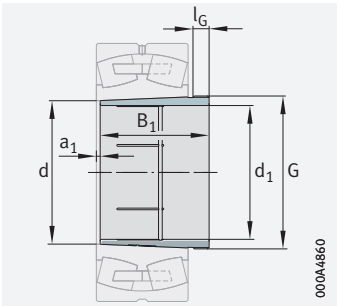

Hydraulic withdrawal sleeve
Taper 1:12
(taper 1:30 for AH240, AH241)

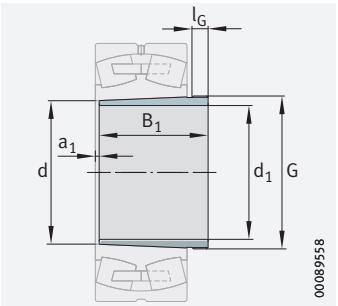

Taper 1:12
(taper 1:30 for AH240, AH241)

d_1 = 150 – 160 mm

Main dimensions			Mass	Designation	Dimensions			Mounting dimensions		
d_1	G	B_1	m ≈ kg	➤ *1686|1.4*	d	a_1 ≈	l_G	G_1	a	l_{G1}
150	M170×3	64	1,71	**AH232**	160	5	15	–	–	–
	M170×3	77	2,09	**AH3032**	160	5	16	–	–	–
	M170×3	77	2,09	**AH3032-H**	160	5	16	M6	4,2	7
	M180×3	88	2,76	**AH332**	160	5	16	–	–	–
	M170×3	88	2,42	**AH332G**	160	5	16	–	–	–
	M170×3	95	2,31	**AH24032**	160	11	15	–	–	–
	M170×3	95	2,27	**AH24032-H**	160	11	15	M6	4,2	7
	M170×3	103	2,9	**AH3132A**	160	5	16	–	–	–
	M170×3	103	2,9	**AH3132A-H**	160	5	16	M6	4,5	7
	M170×3	124	3,04	**AH24132**	160	11	15	–	–	–
	M180×3	124	4,08	**AH3232**	160	6	20	–	–	–
	M180×3	124	4,08	**AH3232-H**	160	6	20	M6	4,5	7
	M170×3	124	3,65	**AH3232G**	160	6	20	–	–	–
	M170×3	124	3,65	**AH3232G-H**	160	6	20	M6	4,5	7
	M180×3	140	4,77	**AH2332**	160	6	24	–	–	–
	M180×3	140	4,77	**AH2332-H**	160	6	24	M6	4,5	7
	M170×3	140	4,26	**AH2332G**	160	6	24	–	–	–
	M170×3	140	4,26	**AH2332G-H**	160	6	24	M6	4,5	7
	M180×3	160	5,58	**AH3332**	160	6	24	–	–	–
	M180×3	160	5,58	**AH3332-H**	160	6	24	M6	4,5	7

medias *https://www.schaeffler.de/std/1F9A*

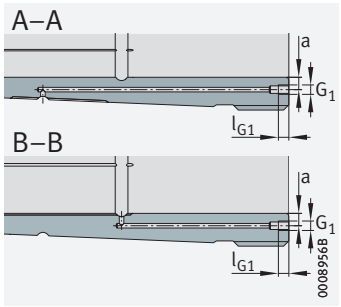

Hydraulic withdrawal sleeve (suffix H) Mounting dimensions

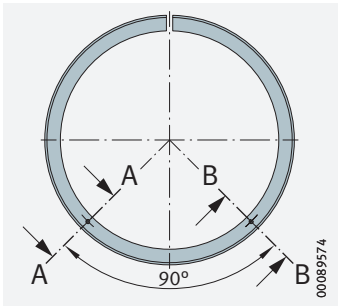

Oil connectors for hydraulic withdrawal sleeve

Main dimensions			Mass	Designation	Dimensions			Mounting dimensions		
d_1	G	B_1	m ≈ kg	➤*1686|1.4*	d	a_1 ≈	l_G	G_1	a	l_{G1}
160	M180×3	59	1,65	**AH3934A**	170	5	13	–	–	–
	M180×3	69	1,98	**AH234**	170	5	16	–	–	–
	M180×3	85	2,48	**AH3034**	170	5	17	–	–	–
	M180×3	85	2,48	**AH3034-H**	170	5	17	M6	4,2	7
	M190×3	93	3,13	**AH334**	170	5	17	–	–	–
	M180×3	93	2,75	**AH334G**	170	5	17	–	–	–
	M190×3	104	3,4	**AH3134**	170	5	16	–	–	–
	M190×3	104	3,4	**AH3134-H**	170	5	16	M6	4,5	7
	M180×3	104	3,12	**AH3134A**	170	5	16	–	–	–
	M180×3	104	3,12	**AH3134A-H**	170	5	16	M6	4,5	7
	M180×3	106	2,76	**AH24034**	170	11	16	–	–	–
	M180×3	125	3,27	**AH24134**	170	11	16	–	–	–
	M190×3	134	4,83	**AH3234**	170	6	24	–	–	–
	M190×3	134	4,83	**AH3234-H**	170	6	24	M6	4,5	7
	M180×3	134	4,29	**AH3234G**	170	6	24	–	–	–
	M180×3	134	4,29	**AH3234G-H**	170	6	24	M6	4,5	7
	M190×3	146	5,32	**AH2334**	170	6	24	–	–	–
	M190×3	146	5,32	**AH2334-H**	170	6	24	M6	4,5	7
	M180×3	146	4,78	**AH2334G**	170	6	24	–	–	–
	M180×3	146	4,78	**AH2334G-H**	170	6	24	M6	4,5	7
	M190×3	164	6,11	**AH3334**	170	6	24	–	–	–
	M190×3	164	6,11	**AH3334-H**	170	6	24	M6	4,5	7

medias *https://www.schaeffler.de/std/1F9A*

Withdrawal sleeves

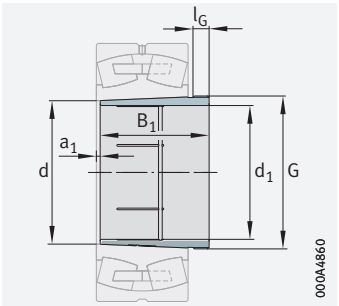

Hydraulic withdrawal sleeve
Taper 1:12
(taper 1:30 for AH240, AH241)

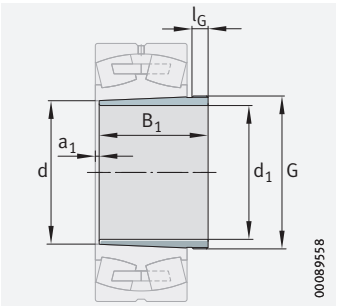

Taper 1:12
(taper 1:30 for AH240, AH241)

d_1 = 170 – 180 mm

Main dimensions			Mass	Designation	Dimensions			Mounting dimensions		
d_1	G	B_1	m ≈ kg	➤ *1686|1.4*	d	a_1 ≈	l_G	G_1	a	l_{G1}
170	M190×3	66	1,96	**AH3936**	180	5	13	–	–	–
	M190×3	69	2,1	**AH236**	180	5	16	–	–	–
	M190×3	92	2,87	**AH3036**	180	6	17	–	–	–
	M190×3	92	2,87	**AH3036-H**	180	6	17	M6	4,2	7
	M200×3	105	3,76	**AH2236**	180	5	17	–	–	–
	M200×3	105	3,68	**AH2236-H**	180	5	17	M6	4,5	7
	M190×3	105	3,35	**AH2236G**	180	5	17	–	–	–
	M190×3	105	3,28	**AH2236G-H**	180	5	17	M6	4,5	7
	M190×3	116	3,21	**AH24036**	180	11	16	–	–	–
	M190×3	116	3,79	**AH3136A**	180	6	19	–	–	–
	M190×3	116	3,79	**AH3136A-H**	180	6	19	M6	4,5	7
	M190×3	134	3,74	**AH24136**	180	11	16	–	–	–
	M200×3	140	5,39	**AH3236**	180	6	25	–	–	–
	M200×3	140	5,39	**AH3236-H**	180	6	25	M6	4,5	7
	M190×3	140	4,8	**AH3236G**	180	6	25	–	–	–
	M190×3	140	4,8	**AH3236G-H**	180	6	25	M6	4,5	7
	M200×3	154	6,04	**AH2336**	180	6	26	–	–	–
	M200×3	154	6,04	**AH2336-H**	180	6	26	M6	4,5	7
	M190×3	154	5,42	**AH2336G**	180	6	26	–	–	–
	M190×3	154	5,42	**AH2336G-H**	180	6	26	M6	4,5	7
	M200×3	176	7,1	**AH3336**	180	6	26	–	–	–
	M200×3	176	7,1	**AH3336-H**	180	6	26	M6	4,5	7

medias *https://www.schaeffler.de/std/1F9A*

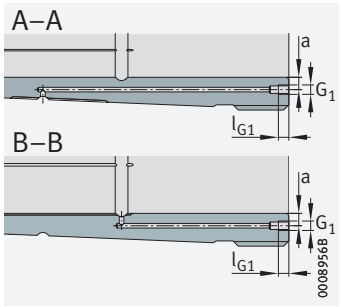

Hydraulic withdrawal sleeve (suffix H) Mounting dimensions

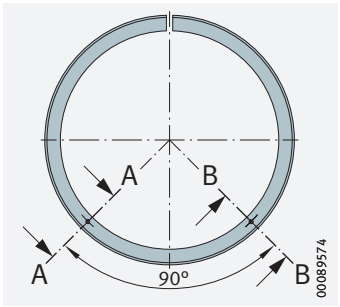

Oil connectors for hydraulic withdrawal sleeve

Main dimensions			Mass	Designation	Dimensions			Mounting dimensions		
d_1	G	B_1	m ≈ kg	➤*1686|1.4*	d	a_1 ≈	l_G	G_1	a	l_{G1}
180	M200×3	66	2,07	**AH3938**	190	5	13	–	–	–
	Tr205×4	73	2,57	**AH238**	190	5	17	–	–	–
	M200×3	73	2,36	**AH238G**	190	5	17	–	–	–
	Tr205×4	96	3,42	**AH3038**	190	6	18	–	–	–
	Tr205×4	96	3,42	**AH3038-H**	190	6	18	M6	4,2	7
	M200×3	96	3,19	**AH3038G**	190	6	18	–	–	–
	M200×3	96	3,19	**AH3038G-H**	190	6	18	M6	4,2	7
	Tr210×4	112	4,28	**AH2238**	190	5	18	–	–	–
	Tr210×4	112	4,19	**AH2238-H**	190	5	18	M6	4,5	7
	M200×3	112	3,83	**AH2238G**	190	5	18	–	–	–
	M200×3	112	3,75	**AH2238G-H**	190	5	18	M6	4,5	7
	M200×3	118	3,48	**AH24038**	190	13	18	–	–	–
	Tr210×4	125	4,89	**AH3138**	190	6	20	–	–	–
	Tr210×4	125	4,89	**AH3138-H**	190	6	20	M6	4,5	7
	M200×3	125	4,39	**AH3138G**	190	6	20	–	–	–
	M200×3	125	4,39	**AH3138G-H**	190	6	20	M6	4,5	7
	Tr210×4	145	5,92	**AH3238**	190	7	25	–	–	–
	Tr210×4	145	5,92	**AH3238-H**	190	7	25	M6	4,5	7
	M200×3	145	5,3	**AH3238G**	190	7	25	–	–	–
	M200×3	145	5,3	**AH3238G-H**	190	7	25	M6	4,5	7
	M200×3	146	4,37	**AH24138**	190	13	18	–	–	–
	Tr210×4	160	6,67	**AH2338**	190	7	26	–	–	–
	Tr210×4	160	6,67	**AH2338-H**	190	7	26	M6	4,5	7
	M200×3	160	6,02	**AH2338G**	190	7	26	–	–	–
	M200×3	160	6,02	**AH2338G-H**	190	7	26	M6	4,5	7
	Tr210×4	181	7,76	**AH3338**	190	7	26	–	–	–
	Tr210×4	181	7,76	**AH3338-H**	190	7	26	M6	4,5	7

medias *https://www.schaeffler.de/std/1F9A*

Withdrawal sleeves

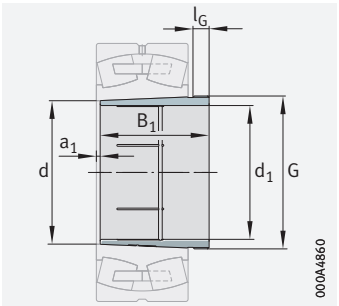

Hydraulic withdrawal sleeve
Taper 1:12
(taper 1:30 for AH240, AH241)

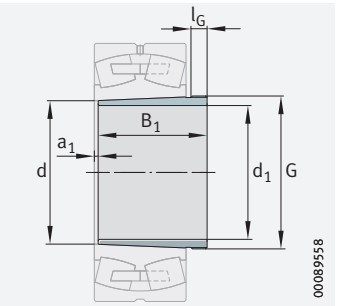

Taper 1:12
(taper 1:30 for AH240, AH241)

d_1 = 190 – 200 mm

Main dimensions			Mass	Designation	Dimensions			Mounting dimensions		
d_1	G	B_1	m ≈ kg	➤ *1686|1.4*	d	a_1 ≈	l_G	G_1	a	l_{G1}
190	Tr215×4	77	2,88	**AH240**	200	5	18	–	–	–
	Tr210×4	77	2,43	**AH240G**	200	5	18	–	–	–
	Tr210×4	77	2,62	**AH3940**	200	6	16	–	–	–
	Tr215×4	102	3,86	**AH3040**	200	6	19	–	–	–
	Tr215×4	102	3,86	**AH3040-H**	200	6	19	M6	4,2	7
	Tr210×4	102	3,62	**AH3040G**	200	6	19	–	–	–
	Tr210×4	102	3,62	**AH3040G-H**	200	6	19	M6	4,2	7
	Tr220×4	118	4,8	**AH2240**	200	5	19	–	–	–
	Tr220×4	118	4,7	**AH2240-H**	200	5	19	M6	4,5	7
	Tr210×4	127	3,96	**AH24040**	200	13	18	–	–	–
	Tr210×4	127	3,93	**AH24040-H**	200	13	18	M6	4,2	7
	Tr220×4	134	5,6	**AH3140**	200	6	21	–	–	–
	Tr220×4	134	5,6	**AH3140-H**	200	6	21	M6	4,5	7
	Tr220×4	153	6,61	**AH3240**	200	7	24	–	–	–
	Tr220×4	153	6,61	**AH3240-H**	200	7	24	M6	4,5	7
	Tr210×4	158	5,02	**AH24140**	200	13	18	–	–	–
	Tr220×4	170	7,64	**AH2340**	200	7	30	–	–	–
	Tr220×4	170	7,64	**AH2340-H**	200	7	30	M6	4,5	7
	Tr220×4	195	9,04	**AH3340**	200	7	30	–	–	–
	Tr220×4	195	9,04	**AH3340-H**	200	7	30	M6	4,5	7

medias *https://www.schaeffler.de/std/1F9A*

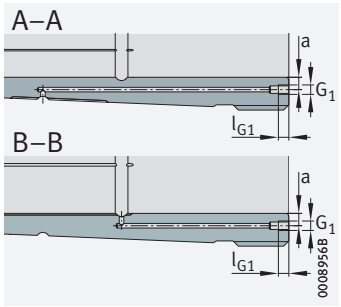

Hydraulic withdrawal sleeve (suffix H) Mounting dimensions

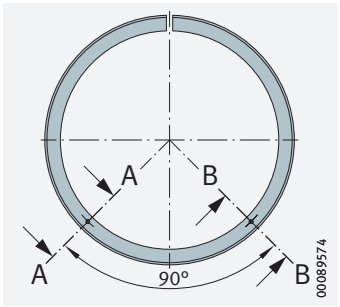

Oil connectors for hydraulic withdrawal sleeve

Main dimensions			Mass	Designation	Dimensions			Mounting dimensions		
d_1	G	B_1	m ≈ kg	➤ *1686|1.4*	d	a_1 ≈	l_G	G_1	a	l_{G1}
200	Tr230×4	77	4,81	**AH3944**	220	6	16	–	–	–
	Tr230×4	77	4,81	**AH3944-H**	220	6	16	M8	7,5	12
	Tr235×4	85	5,62	**AH244**	220	6	18	–	–	–
	Tr230×4	85	5,36	**AH244G**	220	6	18	–	–	–
	Tr235×4	111	7,47	**AH3044**	220	6	20	–	–	–
	Tr235×4	111	7,47	**AH3044-H**	220	6	20	$G^1/_8$	8,5	12
	Tr230×4	111	7,18	**AH3044G**	220	6	20	–	–	–
	Tr230×4	111	7,18	**AH3044G-H**	220	6	20	$G^1/_8$	6,5	12
	Tr240×4	130	9,17	**AH2244**	220	6	20	–	–	–
	Tr240×4	130	8,99	**AH2244-H**	220	6	20	$G^1/_8$	8,5	12
	Tr230×4	138	8,22	**AH24044**	220	14	18	–	–	–
	Tr230×4	138	8,22	**AH24044-H**	220	14	18	M6	8	7
	Tr240×4	145	10,4	**AH3144**	220	6	23	–	–	–
	Tr240×4	145	10,4	**AH3144-H**	220	6	23	$G^1/_8$	8,5	12
	Tr230×4	170	10,3	**AH24144**	220	14	20	–	–	–
	Tr230×4	170	10,3	**AH24144-H**	220	14	20	M6	8	7
	Tr240×4	181	13,6	**AH2344**	220	8	30	–	–	–
	Tr240×4	181	13,6	**AH2344-H**	220	8	30	$G^1/_8$	8,5	12
	Tr240×4	210	16,2	**AH3344**	220	8	30	–	–	–
	Tr240×4	210	16,2	**AH3344-H**	220	8	30	$G^1/_8$	8,5	12

medias *https://www.schaeffler.de/std/1F9A*

Withdrawal sleeves

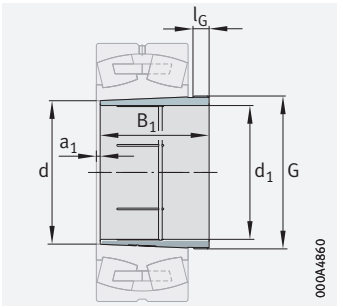

Hydraulic withdrawal sleeve
Taper 1:12
(taper 1:30 for AH240, AH241, AH248)

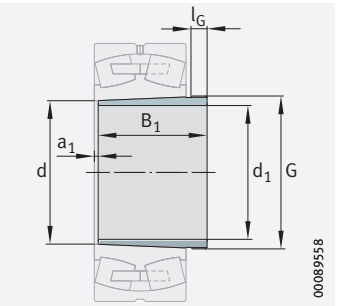

Taper 1:12
(taper 1:30 for AH240, AH241)

d_1 = 220 – 240 mm

Main dimensions			Mass	Designation	Dimensions			Mounting dimensions		
d_1	G	B_1	m ≈ kg	➤ *1686|1.4*	d	a_1 ≈	l_G	G_1	a	l_{G1}
220	Tr250×4	77	5,26	**AH3948**	240	6	16	–	–	–
	Tr250×4	77	5,26	**AH3948-H**	240	6	16	M8	8,5	12
	Tr260×4	96	7,41	**AH248**	240	6	22	–	–	–
	Tr260×4	116	8,92	**AH3048**	240	7	21	–	–	–
	Tr260×4	116	8,92	**AH3048-H**	240	7	21	$G^1/_8$	8,5	12
	Tr250×4	138	9,03	**AH24048**	240	15	20	–	–	–
	Tr250×4	138	9,03	**AH24048-H**	240	15	20	$G^1/_8$	8,5	12
	Tr260×4	144	11,3	**AH2248**	240	6	21	–	–	–
	Tr260×4	144	11	**AH2248-H**	240	6	21	$G^1/_8$	8,5	12
	Tr260×4	154	12,3	**AH3148**	240	7	25	–	–	–
	Tr260×4	154	12,3	**AH3148-H**	240	7	25	$G^1/_8$	8,5	12
	Tr260×4	180	12,6	**AH24148**	240	15	20	–	–	–
	Tr260×4	180	12,6	**AH24148-H**	240	15	20	$G^1/_8$	8,5	12
	Tr260×4	189	15,6	**AH2348**	240	8	30	–	–	–
	Tr260×4	189	15,6	**AH2348-H**	240	8	30	$G^1/_8$	8,5	12
	Tr260×4	225	19,3	**AH3348**	240	8	30	–	–	–
	Tr260×4	225	19,3	**AH3348-H**	240	8	30	$G^1/_8$	8,5	12

medias *https://www.schaeffler.de/std/1F9A*

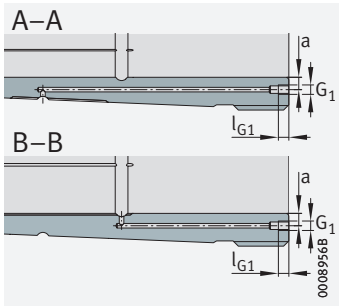

Hydraulic withdrawal sleeve (suffix H) Mounting dimensions

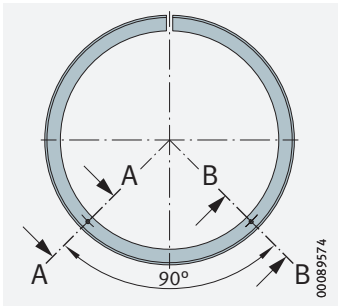

Oil connectors for hydraulic withdrawal sleeve

Main dimensions			Mass	Designation	Dimensions			Mounting dimensions		
d_1	G	B_1	m ≈ kg	➤ *1686|1.4*	d	a_1 ≈	l_G	G_1	a	l_{G1}
240	Tr275×4	94	7,39	**AH3952**	260	6	18	–	–	–
	Tr275×4	94	7,39	**AH3952-H**	260	6	18	M8	8,5	12
	Tr280×4	94	7,7	**AH3952G**	260	6	18	–	–	–
	Tr280×4	94	7,7	**AH3952G-H**	260	6	18	M8	8,5	12
	Tr280×4	105	8,83	**AH252**	260	6	23	–	–	–
	Tr280×4	128	10,8	**AH3052**	260	7	23	–	–	–
	Tr280×4	128	10,8	**AH3052-H**	260	7	23	$G^1/_8$	8,5	12
	Tr290×4	155	14,1	**AH2252**	260	6	23	–	–	–
	Tr290×4	155	13,8	**AH2252-H**	260	6	23	$G^1/_8$	8,5	12
	Tr280×4	155	13,3	**AH2252G**	260	6	23	–	–	–
	Tr280×4	155	13,1	**AH2252G-H**	260	6	23	$G^1/_8$	8,5	12
	Tr270×4	162	11,6	**AH24052**	260	16	20	–	–	–
	Tr270×4	162	11,6	**AH24052-H**	260	16	20	M6	8,5	7
	Tr280×4	162	12,3	**AH24052G**	260	16	20	–	–	–
	Tr280×4	162	12,3	**AH24052G-H**	260	16	20	M6	8,5	7
	Tr290×4	172	16	**AH3152**	260	7	26	–	–	–
	Tr290×4	172	16	**AH3152-H**	260	7	26	$G^1/_8$	8,5	12
	Tr280×4	172	15,1	**AH3152G**	260	7	26	–	–	–
	Tr280×4	172	15,1	**AH3152G-H**	260	7	26	$G^1/_8$	8,5	12
	Tr280×4	202	15,5	**AH24152**	260	16	22	–	–	–
	Tr280×4	202	15,5	**AH24152-H**	260	16	22	$G^1/_8$	8,5	12
	Tr290×4	205	19,7	**AH2352**	260	8	30	–	–	–
	Tr290×4	205	19,7	**AH2352-H**	260	8	30	$G^1/_8$	8,5	12
	Tr280×4	205	18,7	**AH2352G**	260	8	30	–	–	–
	Tr280×4	205	18,7	**AH2352G-H**	260	8	30	$G^1/_8$	8,5	12
	Tr290×4	236	23,2	**AH3352**	260	8	30	–	–	–
	Tr290×4	236	23,2	**AH3352-H**	260	8	30	$G^1/_8$	8,5	12



medias *https://www.schaeffler.de/std/1F9A*

Withdrawal sleeves

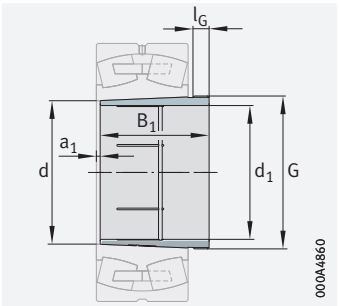

Hydraulic withdrawal sleeve
Taper 1:12
(taper 1:30 for AH240, AH241)

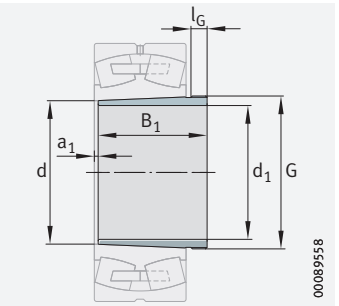

Taper 1:12
(taper 1:30 for AH240, AH241)

d_1 = 260 – 280 mm

Main dimensions			Mass	Designation	Dimensions			Mounting dimensions		
d_1	G	B_1	m ≈ kg	➤ *1686|1.4*	d	a_1 ≈	l_G	G_1	a	l_{G1}
260	Tr295×4	94	7,98	**AH3956**	280	6	18	–	–	–
	Tr295×4	94	7,98	**AH3956-H**	280	6	18	M8	8,5	12
	Tr300×4	94	8,3	**AH3956G**	280	6	18	–	–	–
	Tr300×4	94	8,3	**AH3956G-H**	280	6	18	M8	8,5	12
	Tr300×4	105	9,52	**AH256**	280	8	23	–	–	–
	Tr300×4	131	12	**AH3056**	280	8	24	–	–	–
	Tr300×4	131	12	**AH3056-H**	280	8	24	$G^1/_8$	8,5	12
	Tr310×5	155	15,3	**AH2256**	280	8	24	–	–	–
	Tr310×5	155	15	**AH2256-H**	280	8	24	$G^1/_8$	8,5	12
	Tr300×4	155	14,4	**AH2256G**	280	8	24	–	–	–
	Tr300×4	155	14,1	**AH2256G-H**	280	8	24	$G^1/_8$	8,5	12
	Tr290×4	162	12,6	**AH24056**	280	17	22	–	–	–
	Tr290×4	162	12,6	**AH24056-H**	280	17	22	M6	8,5	7
	Tr300×4	162	13,4	**AH24056G**	280	17	22	–	–	–
	Tr300×4	162	13,4	**AH24056G-H**	280	17	22	M6	8,5	7
	Tr310×5	175	17,7	**AH3156**	280	8	28	–	–	–
	Tr310×5	175	17,7	**AH3156-H**	280	8	28	$G^1/_8$	8,5	12
	Tr300×4	175	16,7	**AH3156G**	280	8	28	–	–	–
	Tr300×4	175	16,7	**AH3156G-H**	280	8	28	$G^1/_8$	8,5	12
	Tr300×4	202	16,7	**AH24156**	280	17	22	–	–	–
	Tr300×4	202	16,7	**AH24156-H**	280	17	22	$G^1/_8$	8,5	12
	Tr310×5	212	22,1	**AH2356**	280	8	30	–	–	–
	Tr310×5	212	22,1	**AH2356-H**	280	8	30	$G^1/_8$	8,5	12
	Tr300×4	212	20,9	**AH2356G**	280	8	30	–	–	–
	Tr300×4	212	20,9	**AH2356G-H**	280	8	30	$G^1/_8$	8,5	12
	Tr310×5	254	27,4	**AH3356**	280	8	30	–	–	–
	Tr310×5	254	27,4	**AH3356-H**	280	8	30	$G^1/_8$	8,5	12

medias *https://www.schaeffler.de/std/1F9A*

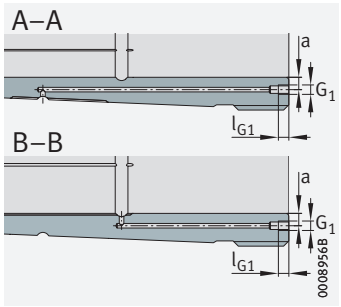

Hydraulic withdrawal sleeve (suffix H) Mounting dimensions

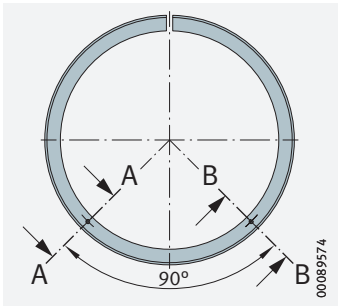

Oil connectors for hydraulic withdrawal sleeve

Main dimensions			Mass	Designation	Dimensions			Mounting dimensions		
d_1	G	B_1	m ≈ kg	➤ *1686|1.4*	d	a_1 ≈	l_G	G_1	a	l_{G1}
280	Tr315×5	112	10,4	**AH3960**	300	7	21	–	–	–
	Tr315×5	112	10,4	**AH3960-H**	300	7	21	M8	8,5	12
	Tr320×5	112	10,8	**AH3960G**	300	7	21	–	–	–
	Tr320×5	112	10,8	**AH3960G-H**	300	7	21	M8	8,5	12
	Tr320×5	145	14,4	**AH3060**	300	8	26	–	–	–
	Tr320×5	145	14,4	**AH3060-H**	300	8	26	$G^1/_8$	8,5	12
	Tr330×5	170	18,3	**AH2260**	300	8	26	–	–	–
	Tr330×5	170	17,9	**AH2260-H**	300	8	26	$G^1/_8$	8,5	12
	Tr320×5	170	17,2	**AH2260G**	300	8	26	–	–	–
	Tr320×5	170	16,9	**AH2260G-H**	300	8	26	$G^1/_8$	8,5	12
	Tr310×5	184	15,5	**AH24060**	300	18	24	–	–	–
	Tr310×5	184	15,5	**AH24060-H**	300	18	24	M6	8,5	7
	Tr320×5	184	16,4	**AH24060G**	300	18	24	–	–	–
	Tr320×5	184	16,4	**AH24060G-H**	300	18	24	M6	8,5	7
	Tr330×5	192	21,2	**AH3160**	300	8	30	–	–	–
	Tr330×5	192	21,2	**AH3160-H**	300	8	30	$G^1/_8$	8,5	12
	Tr320×5	192	20	**AH3160G**	300	8	30	–	–	–
	Tr320×5	192	20	**AH3160G-H**	300	8	30	$G^1/_8$	8,5	12
	Tr320×5	224	20,1	**AH24160**	300	18	24	–	–	–
	Tr320×5	224	20,1	**AH24160-H**	300	18	24	$G^1/_8$	8,5	12
	Tr330×5	228	26	**AH3260**	300	8	34	–	–	–
	Tr330×5	228	26	**AH3260-H**	300	8	34	$G^1/_8$	8,5	12
	Tr320×5	228	24,6	**AH3260G**	300	8	34	–	–	–
	Tr320×5	228	24,6	**AH3260G-H**	300	8	34	$G^1/_8$	8,5	12
	Tr330×5	270	31,8	**AH3360**	300	8	34	–	–	–
	Tr330×5	270	31,8	**AH3360-H**	300	8	34	$G^1/_8$	8,5	12

medias *https://www.schaeffler.de/std/1F9A*

Withdrawal sleeves

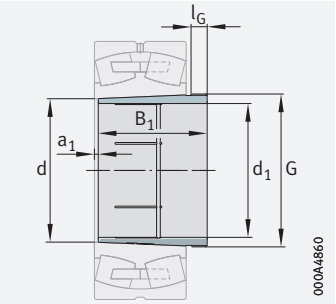

Hydraulic withdrawal sleeve
Taper 1:12
(taper 1:30 for AH240, AH241)

d_1 = 300 – 380 mm

Main dimensions			Mass	Designation	Dimensions			Mounting dimensions		
d_1	G	B_1	m ≈ kg	➤ *1686|1.4*	d	a_1 ≈	l_G	G_1	a	l_{G1}
300	Tr335×5	112	11,1	**AH3964-H**	320	7	21	M8	8,5	12
	Tr340×5	112	11,5	**AH3964G-H**	320	7	21	M8	8,5	12
	Tr345×5	149	16,5	**AH3064-H**	320	8	27	$G^1/_8$	8,5	12
	Tr340×5	149	15,9	**AH3064G-H**	320	8	27	$G^1/_8$	8,5	12
	Tr350×5	180	20,6	**AH2264-H**	320	10	27	$G^1/_8$	8,5	12
	Tr340×5	180	19,6	**AH2264G-H**	320	10	27	$G^1/_8$	8,5	12
	Tr330×5	184	16,6	**AH24064-H**	320	18	24	M6	8,5	7
	Tr340×5	184	17,5	**AH24064G-H**	320	18	24	M6	8,5	7
	Tr350×5	209	24,9	**AH3164-H**	320	8	31	$G^1/_8$	8,5	12
	Tr340×5	209	23,6	**AH3164G-H**	320	8	31	$G^1/_8$	8,5	12
	Tr340×5	242	23,4	**AH24164-H**	320	18	24	$G^1/_8$	8,5	12
	Tr350×5	246	30,4	**AH3264-H**	320	8	36	$G^1/_8$	8,5	12
	Tr340×5	246	28,9	**AH3264G-H**	320	8	36	$G^1/_8$	8,5	12
	Tr350×5	294	37,9	**AH3364-H**	320	8	36	$G^1/_8$	8,5	12
320	Tr355×5	112	11,8	**AH3968-H**	340	7	21	M8	8,5	12
	Tr360×5	112	12,3	**AH3968G-H**	340	7	21	M8	8,5	12
	Tr365×5	162	19,2	**AH3068-H**	340	9	28	$G^1/_8$	8,5	12
	Tr360×5	162	18,6	**AH3068G-H**	340	9	28	$G^1/_8$	8,5	12
	Tr360×5	206	21,1	**AH24068-H**	340	19	26	$G^1/_8$	8,5	12
	Tr370×5	225	28,9	**AH3168-H**	340	9	33	$G^1/_8$	8,5	12
	Tr360×5	225	27,5	**AH3168G-H**	340	9	33	$G^1/_8$	8,5	12
	Tr370×5	264	35,3	**AH3268-H**	340	9	38	$G^1/_8$	8,5	12
	Tr360×5	264	33,6	**AH3268G-H**	340	9	38	$G^1/_8$	8,5	12
	Tr360×5	269	28	**AH24168-H**	340	19	26	$G^1/_8$	8,5	12
	Tr370×5	310	43,1	**AH3368-H**	340	9	38	$G^1/_8$	8,5	12

medias *https://www.schaeffler.de/std/1F9A*

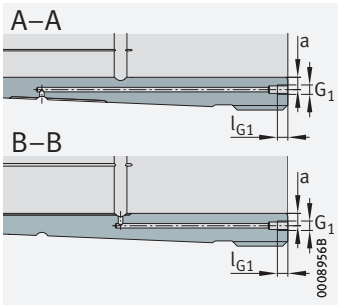

Hydraulic withdrawal sleeve (suffix H) Mounting dimensions

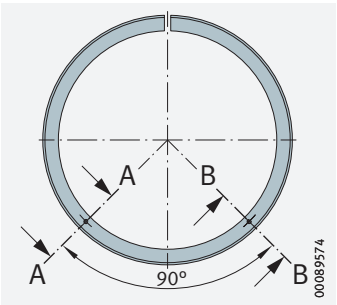

Oil connectors for hydraulic withdrawal sleeve

Main dimensions			Mass	Designation	Dimensions			Mounting dimensions		
d_1	G	B_1	m ≈ kg	➤ *1686|1.4*	d	a_1 ≈	l_G	G_1	a	l_{G1}
340	Tr375×5	112	12,5	**AH3972-H**	360	7	21	M8	8,5	12
	Tr380×5	112	13	**AH3972G-H**	360	7	21	M8	8,5	12
	Tr385×5	167	21,2	**AH3072-H**	360	9	30	$G^1/_8$	8,5	12
	Tr380×5	167	20,5	**AH3072G-H**	360	9	30	$G^1/_8$	8,5	12
	Tr380×5	206	22,3	**AH24072-H**	360	20	26	$G^1/_8$	8,5	12
	Tr400×5	229	33,1	**AH3172-H**	360	9	35	$G^1/_8$	8,5	12
	Tr380×5	229	29,8	**AH3172G-H**	360	9	35	$G^1/_8$	8,5	12
	Tr380×5	269	29,7	**AH24172-H**	360	20	26	$G^1/_8$	8,5	12
	Tr400×5	274	41,1	**AH3272-H**	360	9	40	$G^1/_8$	8,5	12
	Tr380×5	274	37,3	**AH3272G-H**	360	9	40	$G^1/_8$	8,5	12
	Tr400×5	330	51,5	**AH3372-H**	360	9	40	$G^1/_8$	8,5	12
360	Tr395×5	130	15,6	**AH3976-H**	380	8	22	M8	8,5	12
	Tr400×5	130	16,1	**AH3976G-H**	380	8	22	M8	8,5	12
	Tr410×5	170	23,6	**AH3076-H**	380	10	31	$G^1/_8$	8,5	12
	Tr400×5	170	22,1	**AH3076G-H**	380	10	31	$G^1/_8$	8,5	12
	Tr400×5	208	24	**AH24076-H**	380	20	28	$G^1/_8$	8,5	12
	Tr420×5	232	35,6	**AH3176-H**	380	10	36	$G^1/_8$	8,5	12
	Tr400×5	232	32	**AH3176G-H**	380	10	36	$G^1/_8$	8,5	12
	Tr400×5	271	31,8	**AH24176-H**	380	20	28	$G^1/_8$	8,5	12
	Tr420×5	284	45,5	**AH3276-H**	380	10	42	$G^1/_8$	8,5	12
	Tr400×5	284	41,3	**AH3276G-H**	380	10	42	$G^1/_8$	8,5	12
	Tr420×5	342	57,1	**AH3376-H**	380	10	42	$G^1/_8$	8,5	12
380	Tr415×5	130	16,4	**AH3980-H**	400	8	22	M8	8,5	12
	Tr420×5	130	17	**AH3980G-H**	400	8	22	M8	8,5	12
	Tr430×5	183	27,1	**AH3080-H**	400	10	33	$G^1/_8$	8,5	12
	Tr420×5	183	25,4	**AH3080G-H**	400	10	33	$G^1/_8$	8,5	12
	Tr420×5	228	27,8	**AH24080-H**	400	20	28	$G^1/_8$	8,5	12
	Tr440×5	240	39,1	**AH3180-H**	400	10	38	$G^1/_8$	8,5	12
	Tr420×5	240	35,1	**AH3180G-H**	400	10	38	$G^1/_8$	8,5	12
	Tr420×5	278	34,4	**AH24180-H**	400	20	28	$G^1/_8$	8,5	12
	Tr440×5	302	51,7	**AH3280-H**	400	10	44	$G^1/_8$	8,5	12
	Tr420×5	302	47,1	**AH3280G-H**	400	10	44	$G^1/_8$	8,5	12
	Tr440×5	352	62,5	**AH3380-H**	400	10	44	$G^1/_8$	8,5	12

medias *https://www.schaeffler.de/std/1F9A*

Withdrawal sleeves

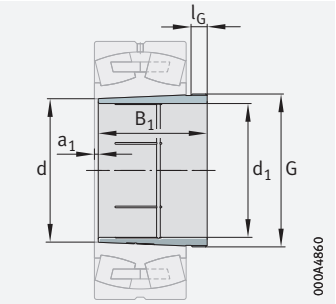

Hydraulic withdrawal sleeve
Taper 1:12
(taper 1:30 for AH240, AH241)

d_1 = 400 – 500 mm

Main dimensions			Mass	Designation	Dimensions			Mounting dimensions		
d_1	G	B_1	m ≈ kg	➤ *1686|1.4*	d	a_1 ≈	l_G	G_1	a	l_{G1}
400	Tr435×5	130	17,3	**AH3984-H**	420	8	22	M8	8,5	12
	Tr440×5	130	17,8	**AH3984G-H**	420	8	22	M8	8,5	12
	Tr450×5	186	29,1	**AH3084-H**	420	10	34	$G^1/_8$	8,5	12
	Tr440×5	186	27,2	**AH3084G-H**	420	10	34	$G^1/_8$	8,5	12
	Tr440×5	230	29,6	**AH24084-H**	420	22	30	$G^1/_8$	8,5	12
	Tr460×5	266	46,4	**AH3184-H**	420	10	40	$G^1/_8$	8,5	12
	Tr440×5	266	42	**AH3184G-H**	420	10	40	$G^1/_8$	8,5	12
	Tr440×5	310	41	**AH24184-H**	420	22	30	$G^1/_8$	8,5	12
	Tr460×5	321	58,6	**AH3284-H**	420	10	46	$G^1/_8$	8,5	12
	Tr440×5	321	53,6	**AH3284G-H**	420	10	46	$G^1/_8$	8,5	12
	Tr460×5	361	67,9	**AH3384-H**	420	10	46	$G^1/_8$	8,5	12
420	Tr460×5	145	21,2	**AH3988-H**	440	8	25	$G^1/_8$	8,5	12
	Tr470×5	194	31,9	**AHX3088-H**	440	11	35	$G^1/_8$	8,5	12
	Tr460×5	194	30	**AHX3088G-H**	440	11	35	$G^1/_8$	8,5	12
	Tr460×5	242	32,8	**AH24088-H**	440	22	30	$G^1/_8$	8,5	12
	Tr480×5	270	49,7	**AHX3188-H**	440	11	42	$G^1/_8$	8,5	12
	Tr460×5	270	44,9	**AHX3188G-H**	440	11	42	$G^1/_8$	8,5	12
	Tr460×5	310	42,9	**AH24188-H**	440	22	30	$G^1/_8$	8,5	12
	Tr480×5	330	63,7	**AHX3288-H**	440	11	48	$G^1/_8$	8,5	12
	Tr460×5	330	58,2	**AHX3288G-H**	440	11	48	$G^1/_8$	8,5	12
	Tr480×5	393	79,6	**AH3388-H**	440	11	48	$G^1/_8$	8,5	12
440	Tr480×5	145	22,2	**AH3992-H**	460	8	25	$G^1/_8$	8,5	12
	Tr490×5	202	35,1	**AHX3092-H**	460	11	37	$G^1/_8$	8,5	12
	Tr480×5	202	32,9	**AHX3092G-H**	460	11	37	$G^1/_8$	8,5	12
	Tr480×5	250	35,6	**AH24092-H**	460	23	32	$G^1/_8$	8,5	12
	Tr510×6	285	58	**AHX3192-H**	460	11	43	$G^1/_8$	8,5	12
	Tr480×5	285	50,3	**AHX3192G-H**	460	11	43	$G^1/_8$	8,5	12
	Tr480×5	332	48,7	**AH24192-H**	460	23	32	$G^1/_8$	8,5	12
	Tr510×6	349	74,6	**AHX3292-H**	460	11	50	$G^1/_8$	8,5	12
	Tr480×5	349	65,6	**AHX3292G-H**	460	11	50	$G^1/_8$	8,5	12
	Tr510×6	415	92,6	**AH3392-H**	460	11	50	$G^1/_8$	8,5	12

medias *https://www.schaeffler.de/std/1F9A*

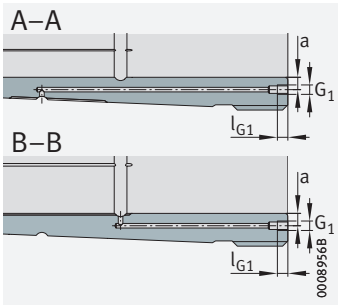

Hydraulic withdrawal sleeve (suffix H) Mounting dimensions

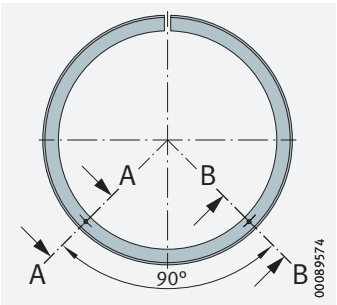

Oil connectors for hydraulic withdrawal sleeve

Main dimensions			Mass	Designation	Dimensions			Mounting dimensions		
d_1	G	B_1	m ≈ kg	➤ *1686|1.4*	d	a_1 ≈	l_G	G_1	a	l_{G1}
460	Tr500×5	158	25,7	**AH3996-H**	480	9	28	$G^1/_8$	8,5	12
	Tr520×6	205	39,7	**AHX3096-H**	480	12	38	$G^1/_8$	8,5	12
	Tr500×5	205	35	**AHX3096G-H**	480	12	38	$G^1/_8$	8,5	12
	Tr500×5	250	37,2	**AH24096-H**	480	23	32	$G^1/_8$	8,5	12
	Tr530×6	295	63,3	**AHX3196-H**	480	12	45	$G^1/_8$	8,5	12
	Tr500×5	295	54,8	**AHX3196G-H**	480	12	45	$G^1/_8$	8,5	12
	Tr500×5	340	52,2	**AH24196G-H**	480	23	32	$G^1/_8$	8,5	12
	Tr500×5	343	52,9	**AH24196-H**	480	25	35	$G^1/_8$	8,5	12
	Tr530×6	364	82,2	**AHX3296-H**	480	12	52	$G^1/_8$	8,5	12
	Tr500×5	364	72,4	**AHX3296G-H**	480	12	52	$G^1/_8$	8,5	12
	Tr530×6	427	100	**AH3396-H**	480	12	52	$G^1/_8$	8,5	12
480	Tr520×6	162	27,7	**AH39/500-H**	500	10	32	$G^1/_8$	8,5	12
	Tr530×6	162	29,8	**AH39/500G-H**	500	10	32	$G^1/_8$	8,5	12
	Tr540×6	209	42,5	**AHX30/500-H**	500	12	40	$G^1/_8$	8,5	12
	Tr530×6	209	39,9	**AHX30/500G-H**	500	12	40	$G^1/_8$	8,5	12
	Tr520×6	253	39,5	**AH240/500-H**	500	23	35	$G^1/_8$	8,5	12
	Tr530×6	253	41,7	**AH240/500G-H**	500	23	35	$G^1/_8$	8,5	12
	Tr550×6	313	70,9	**AHX31/500-H**	500	12	47	$G^1/_8$	8,5	12
	Tr530×6	313	64,7	**AHX31/500G-H**	500	12	47	$G^1/_8$	8,5	12
	Tr530×6	360	60,5	**AH241/500G-H**	500	23	35	$G^1/_8$	8,5	12
	Tr520×6	362	58,8	**AH241/500-H**	500	25	37	$G^1/_8$	8,5	12
	Tr550×6	393	94,4	**AHX32/500-H**	500	12	54	$G^1/_8$	8,5	12
	Tr530×6	393	87,3	**AHX32/500G-H**	500	12	54	$G^1/_8$	8,5	12
	Tr550×6	442	110	**AH33/500-H**	500	12	54	$G^1/_8$	8,5	12
500	Tr550×6	175	43,1	**AH39/530-H**	530	10	37	$G^1/_4$	10	15
	Tr560×6	175	45,6	**AH39/530G-H**	530	10	37	$G^1/_4$	10	15
	Tr560×6	230	61,7	**AH30/530A-H**	530	12	45	$G^1/_4$	10	15
	Tr560×6	285	67,5	**AH240/530G-H**	530	24	35	$G^1/_4$	10	15
	Tr550×6	290	66,8	**AH240/530-H**	530	25	40	$G^1/_4$	10	15
	Tr560×6	325	92,3	**AH31/530A-H**	530	12	53	$G^1/_4$	10	15
	Tr560×6	370	89	**AH241/530G-H**	530	24	35	$G^1/_4$	10	15
	Tr550×6	375	88,2	**AH241/530-H**	530	25	40	$G^1/_4$	10	15
	Tr580×6	412	132	**AH32/530A-H**	530	12	57	$G^1/_4$	10	15
	Tr560×6	412	124	**AH32/530AG-H**	530	12	57	$G^1/_4$	10	15
	Tr580×6	469	155	**AH33/530-H**	530	12	57	$G^1/_4$	10	15

medias *https://www.schaeffler.de/std/1F9A*

Withdrawal sleeves

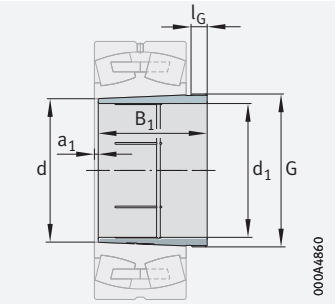

Hydraulic withdrawal sleeve
Taper 1:12
(taper 1:30 for AH240, AH241)

d_1 = 530 – 670 mm

Main dimensions			Mass	Designation	Dimensions			Mounting dimensions		
d_1	G	B_1	m ≈ kg	➤*1686|1.4*	d	a_1 ≈	l_G	G_1	a	l_{G1}
530	Tr580×6	180	47	**AH39/560-H**	560	10	37	$G^1/_4$	12	15
	Tr600×6	180	52,3	**AH39/560G-H**	560	10	37	$G^1/_4$	12	15
	Tr590×6	240	68,4	**AH30/560A-H**	560	12	45	$G^1/_4$	12	15
	Tr600×6	240	71,6	**AH30/560AG-H**	560	12	45	$G^1/_4$	12	15
	Tr600×6	296	77,5	**AH240/560G-H**	560	24	38	$G^1/_4$	12	15
	Tr580×6	298	72,7	**AH240/560-H**	560	25	40	$G^1/_4$	12	15
	Tr590×6	335	101	**AH31/560A-H**	560	12	55	$G^1/_4$	12	15
	Tr600×6	335	105	**AH31/560AG-H**	560	12	55	$G^1/_4$	12	15
	Tr600×6	393	104	**AH241/560G-H**	560	24	38	$G^1/_4$	12	15
	Tr580×6	400	101	**AH241/560-H**	560	28	45	$G^1/_4$	12	15
	Tr610×6	422	144	**AH32/560A-H**	560	12	57	$G^1/_4$	12	15
	Tr600×6	422	139	**AH32/560AG-H**	560	12	57	$G^1/_4$	12	15
	Tr610×6	475	166	**AH33/560-H**	560	12	57	$G^1/_4$	12	15
570	Tr625×6	192	55,6	**AH39/600-H**	600	10	38	$G^1/_4$	12	15
	Tr630×6	192	57	**AH39/600G-H**	600	10	38	$G^1/_4$	12	15
	Tr630×6	245	75	**AH30/600A-H**	600	14	45	$G^1/_4$	12	15
	Tr630×6	310	84,1	**AH240/600G-H**	600	26	38	$G^1/_4$	12	15
	Tr625×6	317	85,4	**AH240/600-H**	600	30	45	$G^1/_4$	12	15
	Tr630×6	355	116	**AH31/600A-H**	600	14	55	$G^1/_4$	12	15
	Tr630×6	413	114	**AH241/600G-H**	600	26	38	$G^1/_4$	12	15
	Tr625×6	425	118	**AH241/600-H**	600	30	50	$G^1/_4$	12	15
	Tr650×6	445	164	**AH32/600A-H**	600	14	57	$G^1/_4$	12	15
	Tr630×6	445	155	**AH32/600AG-H**	600	14	57	$G^1/_4$	12	15
	Tr650×6	519	200	**AH33/600-H**	600	14	57	$G^1/_4$	12	15

medias *https://www.schaeffler.de/std/1F9A*

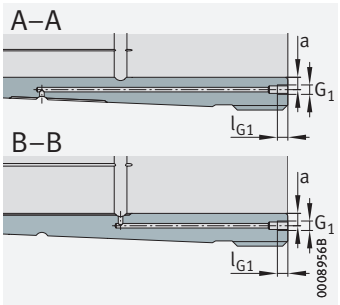

Hydraulic withdrawal sleeve (suffix H) Mounting dimensions

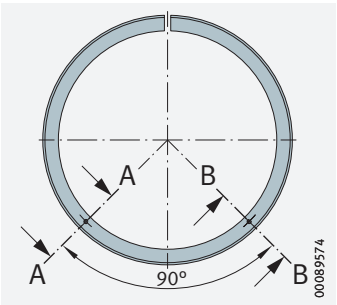

Oil connectors for hydraulic withdrawal sleeve

Main dimensions			Mass	Designation	Dimensions			Mounting dimensions		
d_1	G	B_1	m ≈ kg	➤ *1686|1.4*	d	a_1 ≈	l_G	G_1	a	l_{G1}
600	Tr655×6	210	64,5	**AH39/630-H**	630	12	40	$G1/4$	12	15
	Tr670×6	210	69,4	**AH39/630G-H**	630	12	40	$G1/4$	12	15
	Tr670×6	258	87,3	**AH30/630A-H**	630	14	46	$G1/4$	12	15
	Tr670×6	330	97,9	**AH240/630G-H**	630	26	40	$G1/4$	12	15
	Tr655×6	335	95,1	**AH240/630-H**	630	30	45	$G1/4$	12	15
	Tr670×6	375	136	**AH31/630A-H**	630	14	60	$G1/4$	12	15
	Tr670×6	440	133	**AH241/630G-H**	630	26	40	$G1/4$	12	15
	Tr655×6	450	132	**AH241/630-H**	630	30	50	$G1/4$	12	15
	Tr680×6	475	188	**AH32/630A-H**	630	14	63	$G1/4$	12	15
	Tr670×6	475	183	**AH32/630AG-H**	630	14	63	$G1/4$	12	15
	Tr680×6	550	227	**AH33/630-H**	630	14	62	$G1/4$	12	15
630	Tr695×6	216	87,7	**AH39/670-H**	670	12	41	$G1/4$	12	15
	Tr710×7	216	92,9	**AH39/670G-H**	670	12	41	$G1/4$	12	15
	Tr710×7	280	124	**AH30/670A-H**	670	14	50	$G1/4$	12	15
	Tr710×7	348	137	**AH240/670G-H**	670	26	40	$G1/4$	12	15
	Tr695×6	358	137	**AH240/670-H**	670	30	50	$G1/4$	12	15
	Tr710×7	395	185	**AH31/670A-H**	670	14	60	$G1/4$	12	15
	Tr710×7	452	180	**AH241/670G-H**	670	26	40	$G1/4$	12	15
	Tr695×6	467	183	**AH241/670-H**	670	30	55	$G1/4$	12	15
	Tr720×7	500	252	**AH32/670A-H**	670	14	63	$G1/4$	12	15
	Tr710×7	500	247	**AH32/670AG-H**	670	14	63	$G1/4$	12	15
	Tr720×7	577	303	**AH33/670-H**	670	14	62	$G1/4$	12	15
670	Tr740×7	228	101	**AH39/710-H**	710	12	43	$G1/4$	15	15
	Tr750×7	228	105	**AH39/710G-H**	710	12	43	$G1/4$	15	15
	Tr750×7	286	135	**AH30/710A-H**	710	16	50	$G1/4$	15	15
	Tr750×7	360	152	**AH240/710G-H**	710	26	45	$G1/4$	15	15
	Tr740×7	365	151	**AH240/710-H**	710	33	50	$G1/4$	15	15
	Tr750×7	405	202	**AH31/710A-H**	710	16	60	$G1/4$	15	15
	Tr750×7	483	207	**AH241/710G-H**	710	26	45	$G1/4$	15	15
	Tr740×7	493	209	**AH241/710-H**	710	33	55	$G1/4$	15	15
	Tr760×7	515	278	**AH32/710A-H**	710	16	65	$G1/4$	15	15
	Tr750×7	515	272	**AH32/710AG-H**	710	16	65	$G1/4$	15	15
	Tr760×7	595	334	**AH33/710-H**	710	16	65	$G1/4$	15	15

medias *https://www.schaeffler.de/std/1F9A*

Withdrawal sleeves

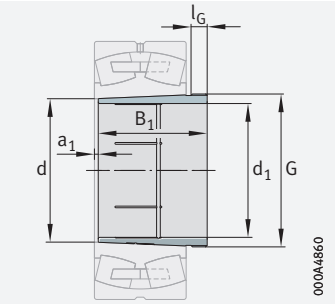

Hydraulic withdrawal sleeve
Taper 1:12
(taper 1:30 for AH240, AH241)

d_1 = 710 – 1 000 mm

Main dimensions			Mass	Designation	Dimensions			Mounting dimensions		
d_1	G	B_1	m ≈ kg	➤*1686|1.4*	d	a_1 ≈	l_G	G_1	a	l_{G1}
710	Tr780×7	234	110	**AH39/750-H**	750	12	44	$G^1/_4$	15	15
	Tr800×7	234	118	**AH39/750G-H**	750	12	44	$G^1/_4$	15	15
	Tr800×7	300	155	**AH30/750A-H**	750	16	50	$G^1/_4$	15	15
	Tr800×7	380	174	**AH240/750G-H**	750	28	45	$G^1/_4$	15	15
	Tr780×7	385	169	**AH240/750-H**	750	35	50	$G^1/_4$	15	15
	Tr800×7	425	232	**AH31/750A-H**	750	16	60	$G^1/_4$	15	15
	Tr800×7	520	241	**AH241/750G-H**	750	28	45	$G^1/_4$	15	15
	Tr780×7	530	239	**AH241/750-H**	750	35	55	$G^1/_4$	15	15
	Tr800×7	540	312	**AH32/750A-H**	750	16	65	$G^1/_4$	15	15
	Tr800×7	625	377	**AH33/750-H**	750	16	65	$G^1/_4$	15	15
750	Tr830×7	245	146	**AH39/800-H**	800	12	45	$G^1/_4$	15	15
	Tr850×7	245	155	**AH39/800G-H**	800	12	45	$G^1/_4$	15	15
	Tr850×7	308	198	**AH30/800A-H**	800	18	50	$G^1/_4$	15	15
	Tr830×7	395	221	**AH240/800-H**	800	40	50	$G^1/_4$	15	15
	Tr850×7	395	232	**AH240/800G-H**	800	28	50	$G^1/_4$	15	15
	Tr850×7	438	297	**AH31/800A-H**	800	18	63	$G^1/_4$	15	15
	Tr850×7	525	311	**AH241/800G-H**	800	28	50	$G^1/_4$	15	15
	Tr830×7	530	304	**AH241/800-H**	800	40	55	$G^1/_4$	15	15
	Tr850×7	550	391	**AH32/800AG-H**	800	18	62	$G^1/_4$	15	15
	Tr850×7	555	396	**AH32/800A-H**	800	18	67	$G^1/_4$	15	15
	Tr850×7	667	500	**AH33/800-H**	800	18	67	$G^1/_4$	15	15
800	Tr880×7	258	165	**AH39/850-H**	850	12	50	$G^1/_4$	15	15
	Tr900×7	258	176	**AH39/850G-H**	850	12	50	$G^1/_4$	15	15
	Tr900×7	325	224	**AH30/850A-H**	850	18	53	$G^1/_4$	15	15
	Tr900×7	415	259	**AH240/850G-H**	850	30	50	$G^1/_4$	15	15
	Tr880×7	418	250	**AH240/850-H**	850	40	53	$G^1/_4$	15	15
	Tr900×7	462	336	**AH31/850A-H**	850	18	63	$G^1/_4$	15	15
	Tr880×7	560	345	**AH241/850-H**	850	40	60	$G^1/_4$	15	15
	Tr900×7	560	358	**AH241/850G-H**	850	40	60	$G^1/_4$	15	15
	Tr900×7	585	450	**AH32/850A-H**	850	18	70	$G^1/_4$	15	15
	Tr900×7	700	567	**AH33/850-H**	850	18	70	$G^1/_4$	15	15

medias *https://www.schaeffler.de/std/1F9A*

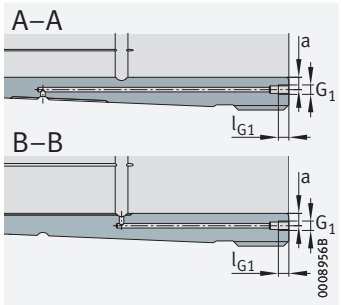

Hydraulic withdrawal sleeve (suffix H) Mounting dimensions

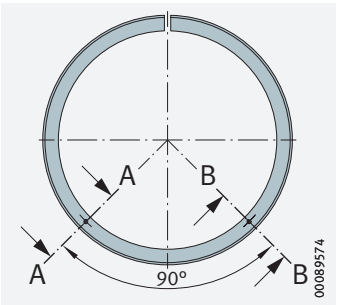

Oil connectors for hydraulic withdrawal sleeve

Main dimensions			Mass	Designation	Dimensions			Mounting dimensions		
d_1	G	B_1	m ≈ kg	➤ *1686|1.4*	d	a_1 ≈	l_G	G_1	a	l_{G1}
850	Tr930×8	265	180	**AH39/900-H**	900	12	51	$G^1/_4$	15	15
	Tr950×8	265	192	**AH39/900G-H**	900	12	51	$G^1/_4$	15	15
	Tr950×8	335	246	**AH30/900A-H**	900	20	55	$G^1/_4$	15	15
	Tr930×8	430	274	**AH240/900-H**	900	45	55	$G^1/_4$	15	15
	Tr950×8	430	287	**AH240/900G-H**	900	45	55	$G^1/_4$	15	15
	Tr950×8	475	368	**AH31/900A-H**	900	20	63	$G^1/_4$	15	15
	Tr930×8	575	376	**AH241/900-H**	900	45	60	$G^1/_4$	15	15
	Tr950×8	575	390	**AH241/900G-H**	900	45	60	$G^1/_4$	15	15
	Tr950×8	585	476	**AH32/900A-H**	900	20	70	$G^1/_4$	15	15
	Tr950×8	720	623	**AH33/900-H**	900	20	70	$G^1/_4$	15	15
900	Tr980×8	282	203	**AH39/950-H**	950	15	51	$G^1/_4$	15	15
	Tr1000×8	282	216	**AH39/950G-H**	950	15	51	$G^1/_4$	15	15
	Tr1000×8	355	277	**AH30/950A-H**	950	20	55	$G^1/_4$	15	15
	Tr980×8	467	316	**AH240/950-H**	950	45	55	$G^1/_4$	15	15
	Tr1000×8	467	329	**AH240/950G-H**	950	45	55	$G^1/_4$	15	15
	Tr1000×8	500	414	**AH31/950A-H**	950	20	63	$G^1/_4$	15	15
	Tr1000×8	600	519	**AH32/950A-H**	950	20	70	$G^1/_4$	15	15
	Tr980×8	605	421	**AH241/950-H**	950	45	60	$G^1/_4$	15	15
	Tr1000×8	605	435	**AH241/950G-H**	950	45	60	$G^1/_4$	15	15
	Tr1000×8	740	683	**AH33/950-H**	950	20	70	$G^1/_4$	15	15
950	Tr1035×8	296	229	**AH39/1000-H**	1 000	15	52	$G^1/_4$	15	15
	Tr1060×8	296	246	**AH39/1000G-H**	1 000	15	52	$G^1/_4$	15	15
	Tr1060×8	365	309	**AH30/1000A-H**	1 000	22	57	$G^1/_4$	15	15
	Tr1035×8	469	339	**AH240/1000-H**	1 000	50	57	$G^1/_4$	15	15
	Tr1060×8	469	357	**AH240/1000G-H**	1 000	50	57	$G^1/_4$	15	15
	Tr1060×8	525	471	**AH31/1000A-H**	1 000	22	63	$G^1/_4$	15	15
	Tr1060×8	630	591	**AH32/1000A-H**	1 000	22	70	$G^1/_4$	15	15
	Tr1060×8	645	502	**AH241/1000-H**	1 000	50	65	$G^1/_4$	15	15
	Tr1060×8	780	781	**AH33/1000-H**	1 000	22	70	$G^1/_4$	15	15
1 000	Tr1095×8	310	294	**AH39/1060-H**	1 060	15	52	$G^1/_4$	15	15
	Tr1120×8	310	312	**AH39/1060G-H**	1 060	15	52	$G^1/_4$	15	15
	Tr1120×8	385	396	**AH30/1060A-H**	1 060	22	60	$G^1/_4$	15	15
	Tr1095×8	498	445	**AH240/1060-H**	1 060	50	60	$G^1/_4$	15	15
	Tr1120×8	498	465	**AH240/1060G-H**	1 060	50	60	$G^1/_4$	15	15
	Tr1120×8	540	583	**AH31/1060A-H**	1 060	22	65	$G^1/_4$	15	15
	Tr1120×8	665	632	**AH241/1060-H**	1 060	50	65	$G^1/_4$	15	15

medias *https://www.schaeffler.de/std/1F9A*

Withdrawal sleeves

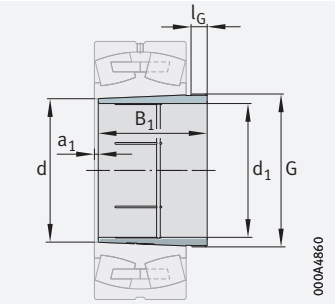

Hydraulic withdrawal sleeve
Taper 1:12
(taper 1:30 for AH240, AH241)

d_1 = 1 060 – 1 450 mm

Main dimensions			Mass	Designation	Dimensions			Mounting dimensions		
d_1	G	B_1	m ≈ kg	➤ *1686|1.4*	d	a_1 ≈	l_G	G_1	a	l_{G1}
1 060	Tr1180×8	410	451	**AH30/1120A-H**	1 120	22	65	$G^1/_4$	15	15
	Tr1155×8	527	501	**AH240/1120-H**	1 120	50	65	$G^1/_4$	15	15
	Tr1180×8	527	524	**AH240/1120G-H**	1 120	50	65	$G^1/_4$	15	15
	Tr1180×8	705	717	**AH241/1120-H**	1 120	50	75	$G^1/_4$	15	15
1 070	Tr1155×8	310	271	**AH39/1120-H**	1 120	15	52	$G^1/_4$	15	15
	Tr1180×8	310	289	**AH39/1120G-H**	1 120	15	52	$G^1/_4$	15	15
1 120	Tr1250×8	420	498	**AH30/1180A-H**	1 180	22	65	$G^1/_4$	15	15
	Tr1215×8	540	543	**AH240/1180-H**	1 180	50	65	$G^1/_4$	15	15
	Tr1250×8	540	577	**AH240/1180G-H**	1 180	50	65	$G^1/_4$	15	15
	Tr1250×8	750	824	**AH241/1180-H**	1 180	50	80	$G^1/_4$	15	15
1 130	Tr1215×8	330	307	**AH39/1180-H**	1 180	15	55	$G^1/_4$	15	15
	Tr1250×8	330	336	**AH39/1180G-H**	1 180	15	55	$G^1/_4$	15	15
1 180	Tr1320×8	445	629	**AH30/1250A-H**	1 250	22	70	$G^1/_4$	15	15
	Tr1285×8	570	694	**AH240/1250-H**	1 250	50	70	$G^1/_4$	15	15
	Tr1320×8	570	733	**AH240/1250G-H**	1 250	50	70	$G^1/_4$	15	15
	Tr1320×8	795	1 050	**AH241/1250-H**	1 250	50	85	$G^1/_4$	15	15
1 200	Tr1285×8	340	336	**AH39/1250-H**	1 250	18	55	$G^1/_4$	15	15
	Tr1320×8	340	367	**AH39/1250G-H**	1 250	18	55	$G^1/_4$	15	15

medias *https://www.schaeffler.de/std/1F9A*

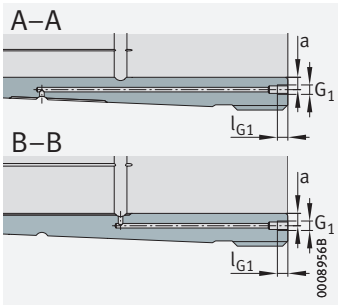

Hydraulic withdrawal sleeve (suffix H) Mounting dimensions

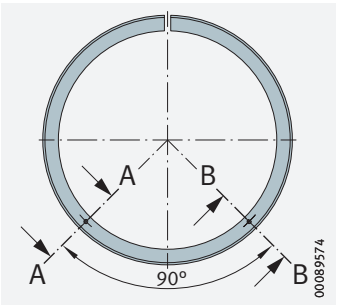

Oil connectors for hydraulic withdrawal sleeve

Main dimensions			Mass	Designation	Dimensions			Mounting dimensions		
d_1	G	B_1	m ≈ kg	➤*1686|1.4*	d	a_1 ≈	l_G	G_1	a	l_{G1}
1 250	Tr1400×8	470	718	**AH30/1320A-H**	1 320	22	70	$G1^1/_4$	15	15
	Tr1355×8	600	775	**AH240/1320-H**	1 320	50	70	$G1^1/_4$	15	15
	Tr1400×8	600	828	**AH240/1320G-H**	1 320	50	70	$G1^1/_4$	15	15
	Tr1400×8	840	1 190	**AH241/1320-H**	1 320	50	90	$G1^1/_4$	15	15
1 270	Tr1355×8	360	379	**AH39/1320-H**	1 320	18	55	$G1^1/_4$	15	15
	Tr1400×8	360	421	**AH39/1320G-H**	1 320	18	55	$G1^1/_4$	15	15
1 320	Tr1500×8	487	902	**AH30/1400A-H**	1 400	22	75	$G1^1/_4$	15	15
	Tr1435×8	615	944	**AH240/1400-H**	1 400	50	70	$G1^1/_4$	15	15
	Tr1500×8	615	1 030	**AH240/1400G-H**	1 400	50	70	$G1^1/_4$	15	15
	Tr1500×8	870	1 500	**AH241/1400-H**	1 400	50	95	$G1^1/_4$	15	15
1 350	Tr1435×8	380	429	**AH39/1400-H**	1 400	20	60	$G1^1/_4$	15	15
	Tr1500×8	380	499	**AH39/1400G-H**	1 400	20	60	$G1^1/_4$	15	15
1 400	Tr1600×8	537	1 260	**AH30/1500A-H**	1 500	22	75	$G1^1/_4$	15	15
	Tr1600×8	895	1 960	**AH241/1500-H**	1 500	50	95	$G1^1/_4$	15	15
1 450	Tr1540×8	400	494	**AH39/1500-H**	1 500	20	60	$G1^1/_4$	15	15
	Tr1600×8	400	563	**AH39/1500G-H**	1 500	20	60	$G1^1/_4$	15	15

medias *https://www.schaeffler.de/std/1F9A*

Locknuts

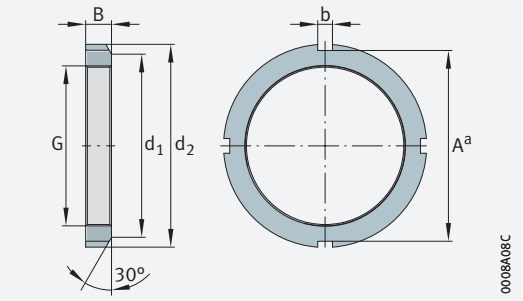

KM0 to KM20

G = M10×0,75 – Tr340×5

Main dimensions			Axial load carrying capacity Static	Mass	Designation ➤*1686|1.4*		Mounting dimensions			
G	d_2	B	F kN	m ≈ kg	Nut	Suitable retainer	d_1	b	A^a	h
M10×0,75	18	4	6 000	0,005	**KM0**	MB0	13,5	3	14	–
M12×1	22	4	6 000	0,007	**KM1**	MB1	17	3	18	–
M15×1	25	5	10 000	0,01	**KM2**	MB2	21	4	21	–
M17×1	28	5	19 000	0,02	**KM3**	MB3	24	4	24	–
M20×1	32	6	12 000	0,019	**KM4**	MB4	26	4	28	–
M25×1,5	38	7	24 000	0,025	**KM5**	MB5	32	5	34	–
M30×1,5	45	7	29 000	0,043	**KM6**	MB6	38	5	41	–
M35×1,5	52	8	43 000	0,07	**KM7**	MB7	44	5	48	–
M40×1,5	58	9	58 000	0,085	**KM8**	MB8	50	6	53	–
M45×1,5	65	10	77 000	0,119	**KM9**	MB9	56	6	60	–
M50×1,5	70	11	93 000	0,148	**KM10**	MB10	61	6	65	–
M55×2	75	11	87 000	0,158	**KM11**	MB11	67	7	69	–
M60×2	80	11	90 000	0,18	**KM12**	MB12	73	7	74	–
M65×2	85	12	108 000	0,22	**KM13**	MB13	79	7	79	–
M70×2	92	12	118 000	0,26	**KM14**	MB14	85	8	85	–
M75×2	98	13	140 000	0,3	**KM15**	MB15	90	8	91	–
M80×2	105	15	190 000	0,4	**KM16**	MB16	95	8	98	–
M85×2	110	16	210 000	0,46	**KM17**	MB17	102	8	103	–
M90×2	120	16	240 000	0,6	**KM18**	MB18	108	10	112	–
M95×2	125	17	270 000	0,658	**KM19**	MB19	113	10	117	–
M100×2	130	18	290 000	0,73	**KM20**	MB20	120	10	122	–
M105×2	140	18	320 000	0,87	**KM21**	MB21	126	12	–	5
M110×2	145	19	350 000	0,965	**KM22**	MB22	133	12	–	5
M120×2	145	20	330 000	0,79	**KML24**	MBL24	135	12	–	5
M115×2	150	19	360 000	1,01	**KM23**	MB23	137	12	–	5
M120×2	155	20	400 000	1,08	**KM24**	MB24	138	12	–	5
M125×2	160	21	430 000	1,22	**KM25**	MB25	148	12	–	5
M130×2	155	21	370 000	0,9	**KML26**	MBL26	145	12	–	5
	165	21	440 000	1,24	**KM26**	MB26	149	12	–	5
M135×2	175	22	500 000	1,55	**KM27**	MB27	160	14	–	6
M140×2	165	22	410 000	1,01	**KML28**	MBL28	155	12	–	5
	180	22	510 000	1,56	**KM28**	MB28	160	14	–	6
M145×2	190	24	610 000	2,05	**KM29**	MB29	171	14	–	6

medias *https://www.schaeffler.de/std/1F9A*

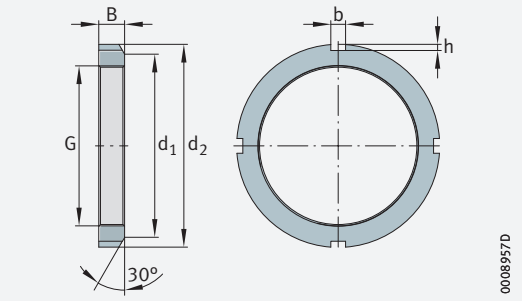

KM21 to KM40, KML, HM..T

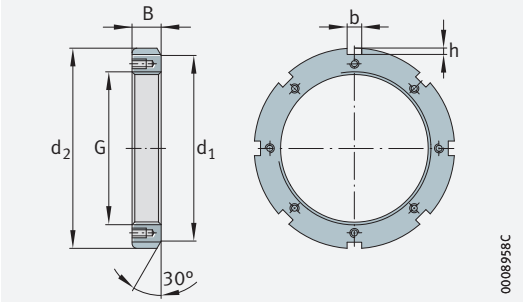

HM30, HM31

Main dimensions			Axial load carrying capacity Static	Mass	Designation ➤*1686|1.4*		Mounting dimensions		
G	d_2	B	F kN	m ≈ kg	Nut	Suitable retainer	d_1	b	h
M150×2	180	24	510 000	1,44	**KML30**	MBL30	170	14	5
	195	24	620 000	2,06	**KM30**	MB30	171	14	6
M155×3	200	25	630 000	2,27	**KM31**	MB31	182	16	7
M160×3	190	25	520 000	1,62	**KML32**	MBL32	180	14	5
	210	25	670 000	2,52	**KM32**	MB32	182	16	7
M165×3	210	26	680 000	2,7	**KM33**	MB33	193	16	7
M170×3	200	26	560 000	1,72	**KML34**	MBL34	190	16	5
	220	26	730 000	2,8	**KM34**	MB34	193	16	7
M180×3	210	27	610 000	1,96	**KML36**	MBL36	200	16	5
	230	27	780 000	3,04	**KM36**	MB36	203	18	8
M190×3	220	28	650 000	2,13	**KML38**	MBL38	210	16	5
	240	28	830 000	3,34	**KM38**	MB38	214	18	8
M200×3	240	29	800 000	2,9	**KML40**	MBL40	220	18	8
	250	29	900 000	3,69	**KM40**	MB40	226	18	8
Tr220×4	260	30	1 800 000	3,21	**HM3044**	MS3044	242	20	9
	280	32	2 000 000	5,3	**HM44T**	MB44	250	20	10
	280	32	2 300 000	4,93	**HM3144**	MS3144	250	20	10
Tr240×4	290	34	2 400 000	5,12	**HM3048**	MS3048	270	20	10
	300	34	2 400 000	6,15	**HM48T**	MB48	270	20	10
	300	34	2 700 000	5,75	**HM3148**	MS3144	270	20	10
Tr260×4	310	34	2 600 000	5,54	**HM3052**	MS3048	290	20	10
	330	35	2 700 000	8,05	**HM52T**	MB52	300	24	12
	330	36	2 900 000	7,43	**HM3152**	MS3152	300	24	12
Tr280×4	330	38	3 100 000	6,61	**HM3056**	MS3056	310	24	10
	350	36	3 000 000	8,9	**HM56T**	MB56	320	24	12
	350	38	3 300 000	8,26	**HM3156**	MS3152	320	24	12
Tr300×4	360	42	4 000 000	9,48	**HM3060**	MS3060	336	24	12
	380	40	3 700 000	11,4	**HM3160**	MS3160	340	24	12
Tr320×5	380	42	3 400 000	10,1	**HM3064**	MS3064	356	24	12
	400	42	3 400 000	12,8	**HM3164**	MS3164	360	24	12
Tr340×5	400	45	4 000 000	11,5	**HM3068**	MS3064	376	24	12
	440	55	5 300 000	23	**HM3168**	MS3168	400	28	15

medias *https://www.schaeffler.de/std/1F9A*

Locknuts

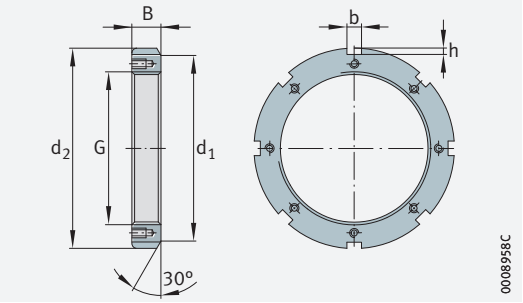

HM30, HM31

G = Tr360×5 – Tr1600×8

Main dimensions			Axial load carrying capacity Static	Mass	Designation ➤1686|1.4		Mounting dimensions		
G	d_2	B	F	m	Nut	Suitable retainer	d_1	b	h
			kN	≈ kg					
Tr360×5	420	45	4 000	11,9	**HM3072**	MS3072	394	28	13
	460	58	6 000	25,7	**HM3172**	MS3168	420	28	15
Tr380×5	450	48	4 900	15,9	**HM3076**	MS3076	422	28	14
	490	60	6 500	30	**HM3176**	MS3176	440	32	18
Tr400×5	470	52	5 600	18,2	**HM3080**	MS3076	442	28	14
	520	62	7 200	35,7	**HM3180**	MS3180	460	32	18
Tr420×5	490	52	5 700	18,9	**HM3084**	MS3084	462	32	14
	540	70	8 800	43,4	**HM3184**	MS3180	490	32	18
Tr440×5	520	60	7 600	26,5	**HM3088**	MS3088	490	32	15
	560	70	9 200	44,3	**HM3188**	MS3188	510	36	20
Tr460×5	540	60	7 800	27,7	**HM3092**	MS3088	510	32	15
	580	75	10 500	53,8	**HM3192**	MS3188	540	36	20
Tr480×5	560	60	8 000	28,7	**HM3096**	MS3096	530	36	15
	620	75	10 800	62,2	**HM3196**	MS3196	560	36	20
Tr500×5	580	68	9 500	34	**HM30/500**	MS3096	550	36	15
	630	80	12 300	62,1	**HM31/500**	MS31/500	580	40	23
Tr530×6	630	68	10 200	44,7	**HM30/530**	MS30/530	590	40	20
	670	80	12 400	71,2	**HM31/530**	MS31/530	610	40	23
Tr560×6	650	75	11 300	46,2	**HM30/560**	MS30/560	610	40	20
	710	85	14 000	85,6	**HM31/560**	MS31/560	650	45	25
Tr600×6	700	75	12 400	55,9	**HM30/600**	MS30/530	660	40	20
	750	85	15 000	91,7	**HM31/600**	MS31/560	690	45	25
Tr630×6	730	75	12 700	58,3	**HM30/630**	MS30/630	690	45	20
	800	95	17 800	122	**HM31/630**	MS31/630	730	50	28
Tr670×6	780	80	15 000	73,8	**HM30/670**	MS30/670	740	45	20
	850	106	21 500	156	**HM31/670**	MS31/670	775	50	28
Tr710×7	830	90	17 800	94,8	**HM30/710**	MS30/710	780	50	25
	900	106	22 200	173	**HM31/710**	MS31/710	825	55	30
Tr750×7	870	90	18 200	99,5	**HM30/750**	MS30/750	820	55	25
	950	112	25 000	202	**HM31/750**	MS31/750	875	60	34
Tr800×7	920	90	19 000	106	**HM30/800**	MS30/750	870	55	25
	1 000	112	26 300	215	**HM31/800**	MS31/750	925	60	34

medias *https://www.schaeffler.de/std/1F9A*

Main dimensions			Axial load carrying capacity Static	Mass	Designation ➤*1686*|*1.4*		Mounting dimensions		
G	d_2	B	F kN	m ≈ kg	Nut	Suitable retainer	d_1	b	h
Tr850×7	980	90	20 200	113	**HM30/850**	MS30/850	925	60	25
	1 060	118	29 600	246	**HM31/850**	MS31/850	975	70	38
Tr900×7	1 030	100	24 000	135	**HM30/900**	MS30/850	975	60	25
	1 120	125	33 500	293	**HM31/900**	MS31/900	1 030	70	38
Tr950×8	1 080	100	24 000	143	**HM30/950**	MS30/950	1 025	60	25
	1 170	125	34 500	310	**HM31/950**	MS31/950	1 080	70	38
Tr1000×8	1 140	100	25 500	165	**HM30/1000**	MS30/1000	1 085	60	25
	1 240	125	36 000	361	**HM31/1000**	MS31/1000	1 140	70	38
Tr1060×8	1 200	100	25 600	175	**HM30/1060**	MS30/1000	1 145	60	25
	1 300	125	38 000	386	**HM31/1060**	MS31/1000	1 210	70	38
Tr1120×8	1 260	100	27 000	185	**HM30/1120**	MS30/1000	1 205	60	25
	1 360	125	40 000	427	**HM31/1120**	MS31/1000	1 270	70	38
Tr1180×8	1 320	100	28 000	196	**HM30/1180**	MS30/1000	1 265	60	25
	1 420	125	42 000	459	**HM31/1180**	MS31/1000	1 330	70	38
Tr1250×8	1 390	110	33 000	233	**HM30/1250**	MS30/1000	1 335	60	25
	1 490	125	45 000	485	**HM31/1250**	MS31/1000	1 400	70	38
Tr1320×8	1 460	110	34 000	245	**HM30/1320**	MS30/1000	1 405	60	25
	1 560	125	47 000	511	**HM31/1320**	MS31/1000	1 470	70	38
Tr1400×8	1 540	110	35 000	259	**HM30/1400**	MS30/1000	1 485	60	25
	1 640	130	51 500	562	**HM31/1400**	MS31/1000	1 550	70	38
Tr1500×8	1 650	110	37 000	297	**HM30/1500**	MS30/1500	1 595	60	25
	1 740	130	53 000	601	**HM31/1500**	MS31/1000	1 650	70	38
Tr1600×8	1 730	100	33 000	273	**Z-195077.01.HM**	MS30/850	1 675	60	25

medias *https://www.schaeffler.de/std/1F9A*



Shaft nuts

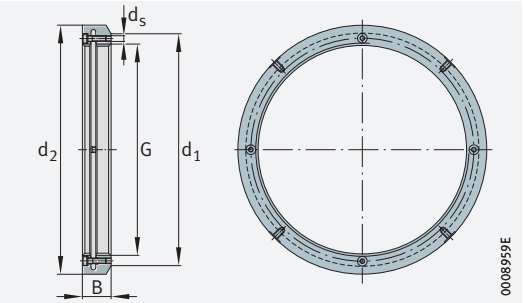

HMZ, HMZ30

G = M90×2 – Tr1500×8

Main dimensions			Mass	Designation	Dimensions		Clamping screw	Maximum tightening torque per clamping screw
G	d_2	B	m ≈ kg		d_1	d_s	Quantity	M_{aL} Nm
M90×2	120	16	0,6	**HMZ18**	108	M5	4	6
M95×2	125	17	0,7	**HMZ19**	113	M5	4	6
M100×2	130	18	0,8	**HMZ20**	120	M6	4	11
M105×2	140	18	0,9	**HMZ21**	126	M6	4	11
M110×2	145	19	1	**HMZ22**	133	M6	4	11
M115×2	150	19	1,1	**HMZ23**	137	M6	4	11
M120×2	155	20	1,1	**HMZ24**	138	M6	4	11
M125×2	160	21	1,3	**HMZ25**	148	M6	4	11
M130×2	165	21	1,3	**HMZ26**	149	M6	4	11
M135×2	175	22	1,6	**HMZ27**	160	M6	4	11
M140×2	180	22	1,6	**HMZ28**	160	M6	4	11
M145×2	190	24	2,2	**HMZ29**	171	M6	4	11
M150×2	195	24	2,2	**HMZ30**	171	M6	4	11
M155×3	200	25	2,4	**HMZ31**	182	M6	4	11
M160×3	210	25	2,6	**HMZ32**	182	M6	4	11
M165×3	210	26	2,8	**HMZ33**	193	M8	4	27
M170×3	220	26	2,9	**HMZ34**	193	M8	4	27
M180×3	230	27	3,2	**HMZ36**	203	M8	4	27
M190×3	240	28	3,5	**HMZ38**	214	M8	4	27
M200×3	250	29	3,9	**HMZ40**	226	M8	4	27
Tr220×4	260	30	3,4	**HMZ3044**	242	M8	4	27
Tr240×4	290	34	5,4	**HMZ3048**	270	M10	4	54
Tr260×4	310	34	5,8	**HMZ3052**	290	M10	4	54
Tr280×4	330	38	6,9	**HMZ3056**	310	M10	4	54
Tr300×4	360	42	10	**HMZ3060**	336	M10	4	54
Tr320×5	380	42	10,6	**HMZ3064**	356	M10	4	54
Tr340×5	400	45	12,1	**HMZ3068**	376	M12	4	93
Tr360×5	420	45	12,5	**HMZ3072**	394	M12	4	93
Tr380×5	450	48	16,7	**HMZ3076**	422	M12	4	93
Tr400×5	470	52	19,1	**HMZ3080**	442	M16	4	230
Tr420×5	490	52	19,8	**HMZ3084**	462	M16	4	230

medias *https://www.schaeffler.de/std/1F9A*

Main dimensions			Mass	Designation	Dimensions		Clamping screw	Maximum tightening torque per clamping screw
G	d_2	B	m ≈ kg		d_1	d_s	Quantity	M_{aL} Nm
Tr440×5	520	60	27,8	**HMZ3088**	490	M16	4	230
Tr460×5	540	60	29,1	**HMZ3092**	510	M16	4	230
Tr480×5	560	60	30,1	**HMZ3096**	530	M16	4	230
Tr500×5	580	68	35,7	**HMZ30/500**	550	M20	4	464
Tr530×6	630	68	46,9	**HMZ30/530**	590	M20	4	464
Tr560×6	650	75	48,5	**HMZ30/560**	610	M20	4	464
Tr600×6	700	75	58,7	**HMZ30/600**	660	M20	4	464
Tr630×6	730	75	61,2	**HMZ30/630**	690	M20	4	464
Tr670×6	780	80	77,5	**HMZ30/670**	740	M20	4	464
Tr710×7	830	90	99,5	**HMZ30/710**	780	M20	4	464
Tr750×7	870	90	105	**HMZ30/750**	820	M20	4	464
Tr800×7	920	90	111	**HMZ30/800**	870	M20	4	464
Tr850×7	980	90	119	**HMZ30/850**	925	M20	4	464
Tr900×7	1 030	100	142	**HMZ30/900**	975	M24	8	798
Tr950×8	1 080	100	150	**HMZ30/950**	1 025	M24	8	798
Tr1000×8	1 140	100	173	**HMZ30/1000**	1 085	M24	8	798
Tr1060×8	1 200	100	184	**HMZ30/1060**	1 145	M24	8	798
Tr1120×8	1 260	100	194	**HMZ30/1120**	1 205	M24	8	798
Tr1180×8	1 320	100	206	**HMZ30/1180**	1 265	M24	8	798
Tr1250×8	1 390	110	245	**HMZ30/1250**	1 335	M24	8	798
Tr1320×8	1 460	110	257	**HMZ30/1320**	1 405	M24	8	798
Tr1400×8	1 540	110	272	**HMZ30/1400**	1 485	M24	8	798
Tr1500×8	1 650	110	312	**HMZ30/1500**	1 595	M24	8	798

medias *https://www.schaeffler.de/std/1F9A*



Tab washers

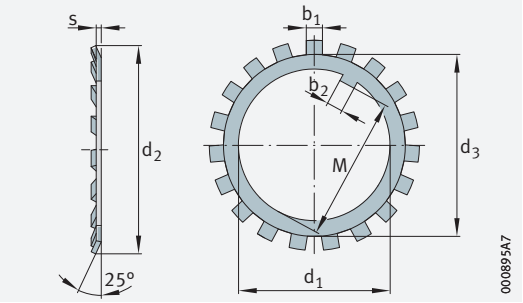

MB, MBL

d_1 = 10 – 280 mm

Main dimensions			Mass	Designation	Mounting dimensions			
d_1	d_2 ≈	s	m 100 pieces ≈ kg		d_3	b_2 [1]	M	b_1
10	21	1	0,13	**MB0**	13,5	3	8,5	3
12	25	1	0,192	**MB1**	17	3	10,5	3
15	28	1	0,253	**MB2**	21	4	13,5	4
17	32	1	0,313	**MB3**	24	4	15,5	4
20	36	1	0,35	**MB4**	26	4	18,5	4
25	42	1,25	0,64	**MB5**	32	5	23	5
30	49	1,25	0,78	**MB6**	38	5	27,5	5
35	57	1,25	1,04	**MB7**	44	6	32,5	5
40	62	1,25	1,23	**MB8**	50	6	37,5	6
45	69	1,25	1,52	**MB9**	56	6	42,5	6
50	74	1,25	1,6	**MB10**	61	6	47,5	6
55	81	1,5	1,96	**MB11**	67	8	52,5	7
60	86	1,5	2,53	**MB12**	73	8	57,5	7
65	92	1,5	2,9	**MB13**	79	8	62,5	7
70	98	1,5	3,34	**MB14**	85	8	66,5	8
75	104	1,5	3,6	**MB15**	90	8	71,5	8
80	112	1,75	4,64	**MB16**	95	10	76,5	8
85	119	1,75	5,24	**MB17**	102	10	81,5	8
90	126	1,75	6,23	**MB18**	108	10	86,5	10
95	133	1,75	6,7	**MB19**	113	10	91,5	10
100	142	1,75	7,65	**MB20**	120	12	96,5	10
105	145	1,75	8,26	**MB21**	126	12	100,5	12
110	154	1,75	9,4	**MB22**	133	12	105,5	12
115	159	2	10,8	**MB23**	137	12	110,5	12
120	151	2	7,7	**MBL24**	135	14	115	12
	164	2	10,5	**MB24**	138	14	115	12
125	170	2	11,8	**MB25**	148	14	120	12
130	161	2	8,7	**MBL26**	145	14	125	12
	175	2	11,3	**MB26**	149	14	125	12
135	185	2	14,4	**MB27**	160	14	130	14

medias *https://www.schaeffler.de/std/1F9A*

[1] The dimension b_2 can be used as a minimum dimension for the slot width in shafts.

Main dimensions			Mass	Designation	Mounting dimensions			
d_1	d_2 ≈	s	m 100 pieces ≈ kg		d_3	b_2 [1]	M	b_1
140	171	2	10,9	**MBL28**	155	16	135	12
	192	2	14,2	**MB28**	160	16	135	14
145	202	2	16,8	**MB29**	171	16	140	14
150	188	2	11,3	**MBL30**	170	16	145	14
	205	2	15,5	**MB30**	171	16	145	14
155	212	2,5	20,9	**MB31**	182	16	147,5	16
160	199	2,5	16,2	**MBL32**	180	18	154	14
	217	2,5	22,2	**MB32**	182	18	154	16
165	222	2,5	24,1	**MB33**	193	18	157,5	16
170	211	2,5	17	**MBL34**	190	18	164	16
	232	2,5	24,7	**MB34**	193	18	164	16
180	221	2,5	18	**MBL36**	200	20	174	16
	242	2,5	26,8	**MB36**	203	20	174	18
190	231	2,5	20,5	**MBL38**	210	20	184	16
	252	2,5	27,8	**MB38**	214	20	184	18
200	248	2,5	21,4	**MBL40**	222	20	194	18
	262	2,5	29,3	**MB40**	226	20	194	18
220	292	3	40	**MB44**	250	24	213	20
240	312	3	40	**MB48**	270	24	233	20
260	342	3	60	**MB52**	300	28	253	24
280	362	3	62	**MB56**	320	28	273	24

medias *https://www.schaeffler.de/std/1F9A*

[1] The dimension b_2 can be used as a minimum dimension for the slot width in shafts.



Retaining brackets

With hexagon head cap screw

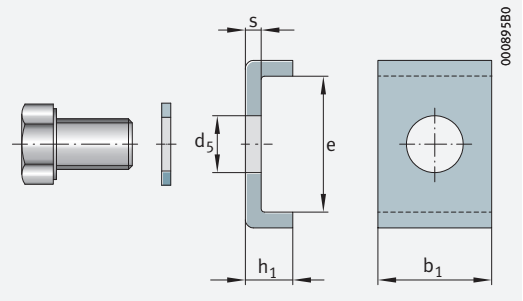

MS30, MS31

b_1 = 20 – 70 mm

Main dimensions			Hexagon head cap screw	Tightening torque	Mass	Designation	Dimensions		Mounting dimensions Shaft slot	
b_1	e	h_1			m	Complete retaining bracket	s	d_5	b_3	t
				Nm	≈ kg					
20	13,5	12	M6×10	10	0,026	**MS3044**	4	7	22	9
	22,5	12	M8×16	25	0,038	**MS3144**	4	9	22	9
	17,5	12	M8×16	25	0,035	**MS3048**	4	9	22	9
24	17,5	12	M8×16	25	0,04	**MS3056**	4	9	26	9
	20,5	12	M8×16	25	0,043	**MS3060**	4	9	26	9
	25,5	12	M10×20	51	0,056	**MS3152**	4	11	26	9
	30,5	12	M10×20	51	0,059	**MS3160**	4	12	26	9
	21	15	M8×16	25	0,057	**MS3064**	5	9	26	10
	31	15	M10×20	51	0,074	**MS3164**	5	12	26	10
28	20	15	M8×16	25	0,064	**MS3072**	5	9	30	10
	24	15	M10×20	51	0,076	**MS3076**	5	12	30	10
	38	15	M12×22	87	0,115	**MS3168**	5	14	30	10
32	24	15	M10×20	51	0,085	**MS3084**	5	12	34	10
	28	15	M12×22	87	0,1	**MS3088**	5	14	34	10
	40	15	M12×22	87	0,115	**MS3176**	5	14	34	10
	45	15	M16×25	215	0,154	**MS3180**	5	18	34	10
36	28	15	M12×22	87	0,109	**MS3096**	5	14	38	12
	43	15	M16×25	215	0,163	**MS3188**	5	18	38	10
	53	15	M16×25	215	0,177	**MS3196**	5	18	38	12
40	45	15	M16×25	215	0,178	**MS31/500**	5	18	42	12

medias *https://www.schaeffler.de/std/1F9A*

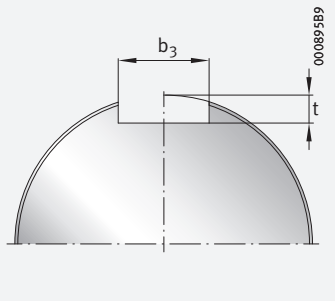

Shaft

Main dimensions			Hexagon head cap screw	Tightening torque	Mass	Designation	Dimensions		Mounting dimensions Shaft slot	
b_1	e	h_1			m	Complete retaining bracket	s	d_5	b_3	t
				Nm	≈ kg					
40	34	21	M16×25	215	0,223	**MS30/530**	7	18	42	14
	29	21	M16×25	215	0,212	**MS30/560**	7	18	42	14
	51	21	M20×40	430	0,347	**MS31/530**	7	22	42	14
45	34	21	M16×25	215	0,244	**MS30/630**	7	18	47	14
	39	21	M16×25	215	0,257	**MS30/670**	7	18	47	14
	54	21	M20×40	430	0,38	**MS31/560**	7	22	47	14
50	39	21	M16×25	215	0,279	**MS30/710**	7	18	52	15
	61	21	M20×40	430	0,426	**MS31/630**	7	22	52	14
	66	21	M20×40	430	0,439	**MS31/670**	7	22	52	15
55	39	21	M16×25	215	0,301	**MS30/750**	7	18	57	15
	69	21	M24×45	740	0,58	**MS31/710**	7	26	57	15
60	51	21	M20×40	430	0,449	**MS30/1000**	7	22	62	16
	56	21	M20×40	430	0,466	**MS30/1500**	7	22	62	16
	44	21	M20×40	430	0,426	**MS30/850**	7	22	62	15
	46	21	M20×40	430	0,433	**MS30/950**	7	22	62	16
	70	21	M24×45	740	0,614	**MS31/750**	7	26	62	15
70	88	21	M24×45	740	0,744	**MS31/1000**	7	26	72	16
	71	21	M24×45	740	0,679	**MS31/850**	7	26	72	16
	76	21	M24×45	740	0,698	**MS31/900**	7	26	72	16
	78	21	M24×45	740	0,706	**MS31/950**	7	26	72	16

medias *https://www.schaeffler.de/std/1F9A*



Rolling elements



1 Rolling elements 1738

1.1 Product design 1738
1.2 Dimensions, tolerances 1741
1.3 Design of bearing arrangements 1742



1 Rolling elements

Rolling elements:

- are the connecting elements and contact elements between the stationary and the moving part of a rolling bearing
- essentially determine, due to their geometrical form, the characteristics of the rolling bearing and the bearing type
- are in contact – depending on their shape – with the raceways by means of point contact or line contact ➤1738|1
- are available as steel balls, cylindrical rollers and needle rollers
  - steel balls are used where moderate to high speeds occur and moderate to high axial forces and radial forces must be supported ➤1739|2
  - cylindrical rollers are used where bearing arrangements are subjected to radial and axial load ➤1740|3
  - needle rollers are particularly suitable where the radial design envelope is restricted and the radial loads are lower than those in bearing arrangements with cylindrical rollers ➤1741|4
- are used in the design of compact bearing arrangements with very high load carrying capacity with a full complement of balls, rollers or needle rollers ➤1742|5

1
Point or line contact

Q = *rolling element load*

① *Ball (point contact)*
② *Cylindrical roller (line contact)*
③ *Needle roller (line contact)*

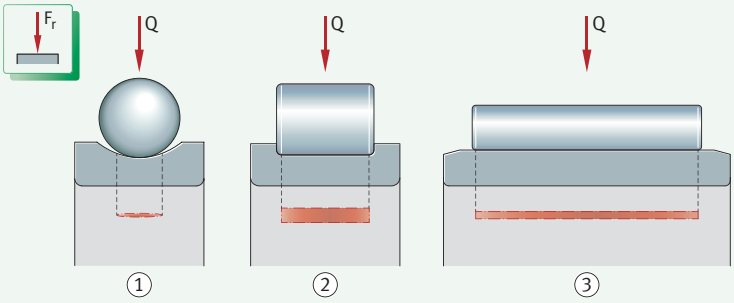

1.1 Product design

Always enquire about the possible supply of rolling elements

The description of the rolling elements in this chapter gives information about the fundamental characteristics and designs of the products.

A specific enquiry must always be placed on Schaeffler regarding the sale and possible supply of loose rolling elements for a specific application.

Steel balls

Basic elements of ball bearings

Steel balls are made from through hardened rolling bearing steel in accordance with DIN EN ISO 683-17 and are the basic elements of ball bearings ➤ *1739* | 2.

2
Steel balls

F_r = *radial load*
F_a = *axial load*
① *Deep groove ball bearing*

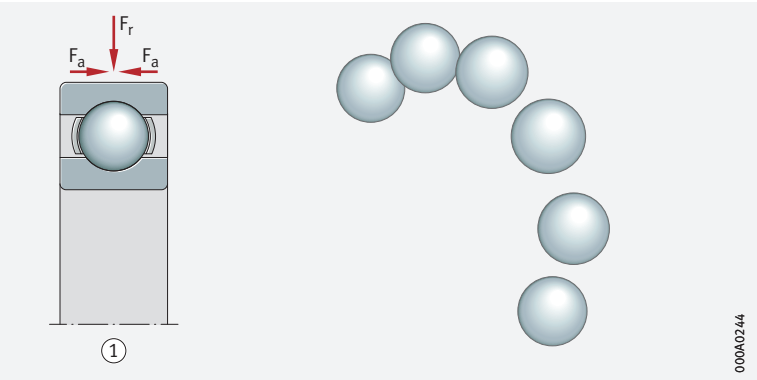

Available grades

Balls are available in the grades G10, G16, G20. The largest and smallest deviation and the geometrical tolerance are defined as a function of the diameter D_w.

Sorting by ball sorts and preferred sort pairs

Balls manufactured under identical conditions (known as batches) are sorted within a class into ball sorts with a very small diameter tolerance according to the mean batch diameter D_{wmL}. Each sort is packed separately and the mean deviation is marked on the packaging.
One pack contains balls of one sort only. In a delivery of balls of the same nominal dimension and class comprising several packs, the sort may differ from one pack to another. Preferred sort range of grades G10 to G20: +6 to −6.

Designation of sorts

The designation of the ball sort (N, P or M) is printed on the packaging:

- N for zero
- P for a positive value (stating the value)
- M for a negative value (stating the value)

Balls of only one sort should always be used in one bearing arrangement.

By agreement, balls made from other materials, such as special steels or ceramic, can be supplied.

Areas of application

Balls are used:

- in rolling bearings where moderate to high speeds occur and moderate to high axial forces and radial forces must be supported, for example in deep groove ball bearings, slewing rings, rotor bearings and linear guidance systems ➤ *1739* | 2
- for standard applications
- where the bearing position is required to operate with little noise

Cylindrical rollers

Basic elements of cylindrical roller bearings

Cylindrical rollers are made from through hardened rolling bearing steel in accordance with DIN EN ISO 683-17 and are the basic elements of cylindrical roller bearings ➤1740|3. The profile has a logarithmic curve. In conjunction with the profiling of the raceways, this prevents edge stresses.

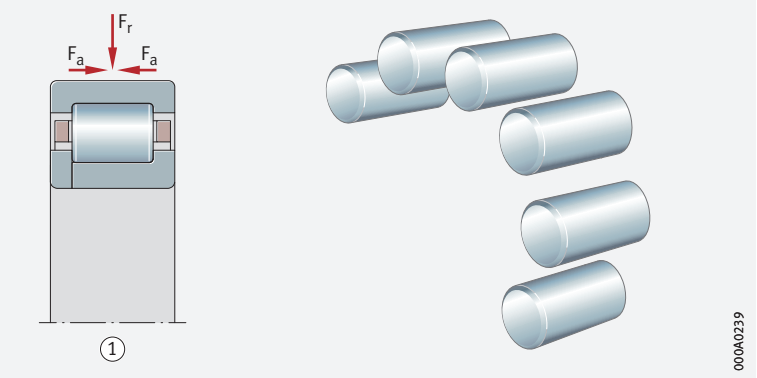

3
Cylindrical rollers

F_r = *radial load*
F_a = *axial load*

① *Cylindrical roller bearing*

Sorting by sorts

Cylindrical rollers are divided into sorts with very small diameter and length tolerances. The sorting is indicated on the packaging. One pack contains cylindrical rollers of one sort only. In a delivery comprising several packs, the sort may differ from one pack to another.

Designation of sorts

The designation of the sort (0, + or –) is printed on the packaging:

- 0 for zero
- + for a positive value (stating the value)
- – for a negative value (stating the value)

Cylindrical rollers of only one sort should always be used in one bearing arrangement.

For available sizes and possible special designs, please enquire with Schaeffler.

Areas of application

Cylindrical rollers are used:

- where bearing arrangements are subjected to very high radial loads ➤1740|3. In the case of a bearing arrangement under combined load (axial/radial), the transmission of moderate axial forces is possible taking account of the adjacent construction; axial load carrying capacity of cylindrical roller bearings ➤421|1.2
- in the automotive industry as well as in machine and gearbox building
- in linear guidance systems

Needle rollers

Basic elements of needle roller bearings

Needle rollers are made from through hardened rolling bearing steel 100Cr6 in accordance with DIN EN ISO 683-17 and are the basic elements of needle roller bearings ➤ *1741* | 4. The needle rollers have profiled ends with flat end faces (end faces = type B). Due to this profiling, the outside surfaces have a curved transition to the ends. This reduces the edge stresses at the ends of the rolling elements. Needle rollers can only support radial loads.

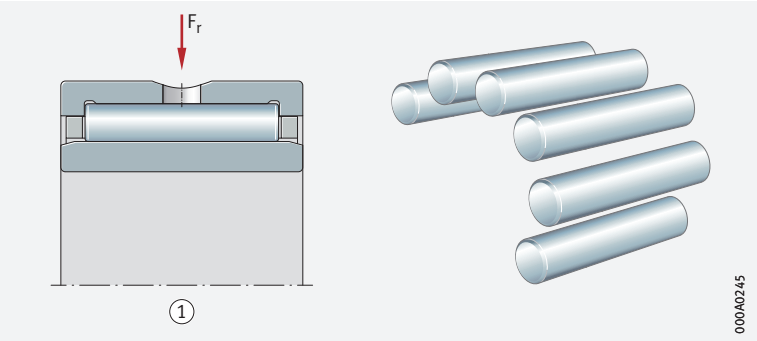

4
Needle rollers

F_r = *radial load*

① *Needle roller bearing*

Sorting by sorts

Needle rollers are divided into sorts with very small diameter tolerances. The sorting is indicated on the packaging. One pack contains needle rollers of one sort only. In a delivery comprising several packs, the sort may differ from one pack to another.

Needle rollers of only one sort should always be used in one bearing arrangement.

For available sizes and possible special designs, please enquire with Schaeffler.

Areas of application

Needle rollers are used:

- for full complement needle roller bearing arrangements subjected to radial load (where the loads are not as high as those on cylindrical roller bearings)

1.2 Dimensions, tolerances

Steel balls

The dimensional and geometrical tolerances of steel balls correspond to DIN 5401/ISO 3290-1.

Cylindrical rollers

The standard grade of cylindrical rollers corresponds to GN in accordance with DIN 5402-1. The design of chamfer dimensions, length tolerances and diameter tolerances of cylindrical rollers is based on DIN 5402-1.

Needle rollers

The dimensional and geometrical accuracy of needle rollers corresponds to DIN 5402-3/ISO 3096.

1.3 Design of bearing arrangements

Design of full complement ball, roller and needle roller bearing arrangements

The rolling elements can be used in the design of full complement ball, roller and needle roller bearing arrangements ➤*1742*|*5*. Since these bearing arrangements completely fill the design envelope with rolling elements, they are particularly compact and have high load carrying capacity and high rigidity. Due to the kinematic conditions in the bearing, however, the speed suitability of such bearing arrangements is not as high as that of comparable bearings with cages. The rolling elements described here allow bearing arrangements with high radial runout accuracy and an adjustable internal clearance (depending on the geometrically accurate design of the raceways).

Areas of application

Such bearing arrangements are used in preference:

- in bearing positions with swivel motions
- where high to very high loads occur
- where only a small design envelope is available

Bearing arrangements with a full complement of balls, rollers or needle rollers require a raceway on the shaft and in the housing that is hardened and ground (which can be used as a rolling element raceway).
Bearing arrangements with needle rollers can only be subjected to radial load ➤*1741*.

For information on the design of bearing arrangements and the permissible speeds, please contact Schaeffler.

5
Full complement needle roller bearing arrangement

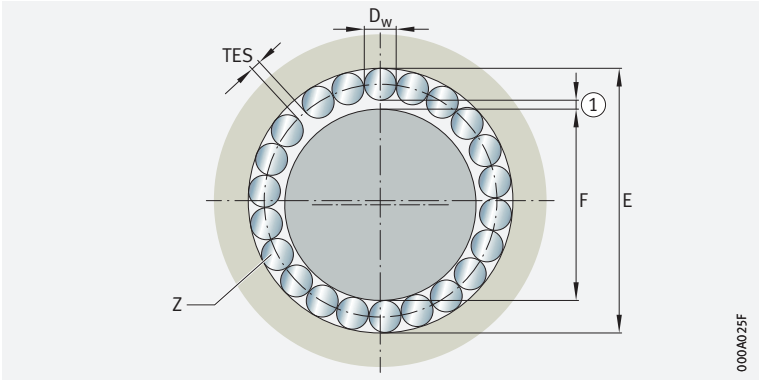

D_w = *rolling element diameter*
E = *raceway diameter of housing bore*
F = *raceway diameter of shaft*
TES = *circumferential clearance*
Z = *rolling element*
① *Radial operating clearance*



Other products





1 Slewing rings 1746

1.1 General features 1746
1.2 Four point contact bearings 1746
1.3 Crossed roller bearings 1747
1.4 Printed and electronic product catalogue 1747

2 Thin section bearings 1748

2.1 General features 1748
2.2 Deep groove ball bearings, four point contact bearings, angular contact ball bearings 1749
2.3 Product catalogue 1749

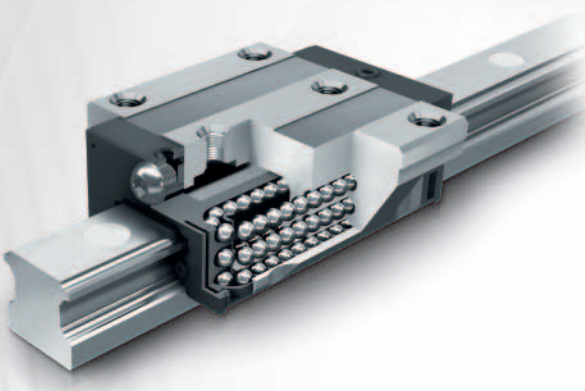

3 Linear guidance systems and linear systems 1750

3.1 Monorail guidance systems 1750
3.2 Hydrostatic compact guidance system 1753
3.3 Shaft and track roller guidance systems 1755
3.4 Flat cage and recirculating roller guidance systems 1756
3.5 Miniature guidance systems 1758
3.6 Screw drives 1759
3.7 Driven linear units 1761

4 Spherical plain bearings, rod ends 1764

4.1 Spherical plain bearings, maintenance-free 1764
4.2 Spherical plain bearings, requiring maintenance 1767
4.3 Rod ends, maintenance-free 1769
4.4 Rod ends, requiring maintenance 1771
4.5 Hydraulic rod ends, requiring maintenance 1773

5 Composite plain bearings with plain bushes 1775

5.1 Metal/polymer composite plain bearings 1775
5.2 ELGOTEX filament wound bushes, maintenance-free or water-resistant 1780
5.3 ELGOGLIDE plain bushes, maintenance-free 1782
5.4 Plain bearings for diverse requirements 1784

1 Slewing rings

✎ *Design variants*

Slewing rings are available as:
- four point contact bearings ➤*1746*|🗀 *1*
- crossed roller bearings ➤*1747*|🗀 *2*

1.1 General features

✎ *Suitable for radial, axial and tilting moment loads*

Schaeffler slewing rings are known worldwide as premium products in the field of rolling bearing technology. They have proved themselves in numerous ways, have high load carrying capacity, a versatile range of applications and are highly cost-effective. Due to their design, a single bearing position can reliably support radial, axial and tilting moment loads. As a result, bearing arrangements comprising a combination of radial and axial bearings can often be reduced to a single bearing position. This reduces, in some cases considerably, the costs and work required in the design of the adjacent construction and the fitting of bearings.

✎ *Sealed on both sides and greased*

Slewing rings are sealed on both sides, lubricated with a high quality grease, can be relubricated via lubrication nipples and are particularly easy to fit.

✎ *Rings with or without gear teeth*

The bearing rings are supplied without gear teeth or – in order to achieve simple drive solutions – are available with external or internal gear teeth.

1.2 Four point contact bearings

✎ *For lower requirements for load carrying capacity, accuracy and rigidity*

Four point contact bearings are available with external teeth, internal teeth or without teeth as well as in the light series 20 and in the standard series 20 and 25 ➤*1746*|🗀 *1*. These slewing rings without preload are robust and proven under very demanding operation; they place only slight demands on the flatness and perpendicularity of the adjacent construction. They are suitable for applications with lower requirements for accuracy and rigidity of the bearing arrangement, for example in simple metalworking machines, wind turbines and construction machinery.

🗀 ***1***
Four point contact bearings

F_a = *axial load*
F_r = *radial load*
M = *tilting moment*

① *Bearing without gear teeth*
② *Bearing with internal gear teeth*

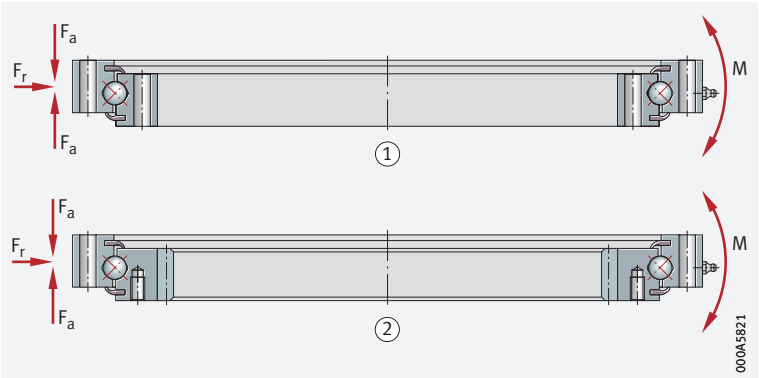

1.3 Crossed roller bearings

Higher load carrying capacity than four point contact bearings

Crossed roller bearings are available with external gear teeth, internal gear teeth and without gear teeth in the standard series 14, as well as in the series XA, XI and XU ➤*1747*| 2. These preloaded slewing rings can support higher loads than four point contact bearings. They have proved themselves particularly effective where bearings are subjected to high radial forces, as well as to moderate axial and tilting moment loads.

Designed for high precision applications

The bearings are suitable for applications with uniform running free from stick-slip, low rotational resistance and high requirements for axial and radial runout accuracy and rigidity, for example in robots, handling systems and machine tools.

2
Crossed roller bearings

F_a = *axial load*
F_r = *radial load*
M = *tilting moment*

① *Bearing without gear teeth*
② *Bearing with external gear teeth*

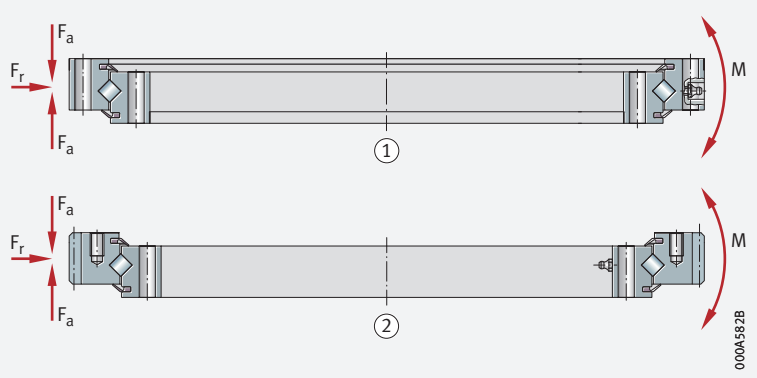

1.4 Printed and electronic product catalogue

The standard range of these four point contact and crossed roller bearings is described in detail in the catalogue Slewing Rings 404 and in our electronic product catalogue ***medias*** *professional*. The printed catalogue can be requested from Schaeffler.

Link

The following link will take you to the electronic product catalogue:
https://medias.schaeffler.com

2 Thin section bearings

✎ *Design variants*

Thin section bearings are available as:
- deep groove ball bearings (type C) ➤*1748*|*1*
- four point contact bearings (type X) ➤*1748*|*1*
- angular contact ball bearings (type E) ➤*1748*|*1*

2.1 General features

✎ *Bearings with an extremely small cross-section for lightweight designs with reduced design envelope*

Thin section bearings are high precision products with very little running noise and very high load carrying capacity. These ball bearings are available in three different designs with an extremely small, predominantly square cross-section ➤*1748*|*1*. Within each series, the cross-section remains constant even in the case of larger shaft and housing bore diameters. The bearings are therefore also described as Constant Section (CS) bearings. This feature distinguishes thin section bearings from the conventional bearings that are described in standardised ISO series. In this way, a larger cross-section can be selected in a graduated way and thus a bearing with higher load carrying capacity can be used without the need to change the shaft diameter. Thin section bearings can thus be used to achieve extremely light and compact designs.

✎ *Available open or sealed, with cages made from brass or plastic*

Thin section bearings are available in designs that are either open or sealed on both sides. The seals are made from synthetic rubber (NBR) and have a steel insert. Sealed bearings are greased. For extreme operating conditions, special lubricants are available. Cages are made from brass or plastic.

✎ *Tolerance classes*

In addition to the standard tolerance class PL1, the classes PL3 and PL6 are available (with increasingly narrow tolerances).

1
Thin section bearings

F_a = *axial load*
F_r = *radial load*
α = *nominal contact angle*

① *Deep groove ball bearing*
② *Four point contact bearing*
③ *Angular contact ball bearing*

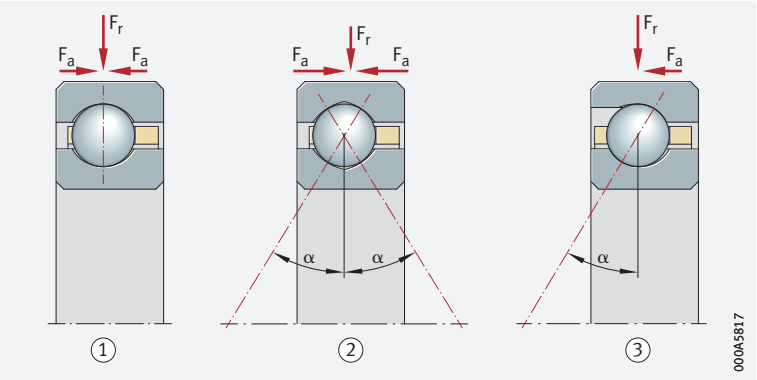

2.2 Deep groove ball bearings, four point contact bearings, angular contact ball bearings

Each of the designs is available in various series. The series correspond to the cross-section sizes. The balls are matched to the series.

Deep groove ball bearings

✎ Suitable for radial and axial loads

Deep groove ball bearings (type C) can support axial loads in both directions as well as radial loads; under axial load, a contact angle ($\alpha > 0°$) is adopted.

Four point contact bearings

✎ Action similar to double row angular contact ball bearings

Four point contact bearings (type X) can support axial loads in both directions as well as radial loads. As a result, they act in the same way as double row angular contact ball bearings.

Angular contact ball bearings

✎ Suitable for high radial and axial loads

Angular contact ball bearings (type E) can be filled with an increased number of balls and have a nominal contact angle of $\alpha = 30°$. They can support considerably higher radial loads than deep groove ball bearings or
four point contact bearings and can support axial loads in one direction. For particular requirements, angular contact ball bearings are also available as matched pairs of bearings. These combinations then have a significantly higher rigidity and load carrying capacity than individual bearing solutions.

2.3 Product catalogue

The standard range of these bearings is described in detail in the product catalogue 575. The catalogue can be requested from Schaeffler.

3 Linear guidance systems and linear systems

✎ *Design variants*

Linear guidance systems and linear systems are available as:

- monorail guidance systems
  - linear recirculating roller bearing and guideway assemblies ➤ *1751* | 🗀 *1*
  - six-row linear recirculating ball bearing and guideway assemblies ➤ *1752* | 🗀 *2*
  - four-row linear recirculating ball bearing and guideway assemblies ➤ *1752* | 🗀 *3*
- hydrostatic compact guidance system ➤ *1753* | 🗀 *4*
- shaft and track roller guidance systems
  - shaft guidance systems ➤ *1755* | 🗀 *6*
  - track roller guidance systems ➤ *1756* | 🗀 *8*
- flat cage and recirculating roller guidance systems
  - flat cage guidance systems ➤ *1757* | 🗀 *9*
  - linear recirculating roller guidance systems ➤ *1757* | 🗀 *10*
- miniature guidance systems
  - two-row miniature linear recirculating ball bearing and guideway assemblies ➤ *1758* | 🗀 *11*
  - four-row miniature linear recirculating ball bearing and guideway assemblies ➤ *1758* | 🗀 *12*
  - miniature carriage units ➤ *1759* | 🗀 *13*
- screw drives
  - ball screw drives ➤ *1759* | 🗀 *14*
  - roller screw drives ➤ *1759* | 🗀 *14*
  - planetary screw drives ➤ *1759* | 🗀 *14* and ➤ *1761* | 🗀 *15*
- driven linear units
  - linear actuators ➤ *1762* | 🗀 *16*, ➤ *1762* | 🗀 *17*, ➤ *1762* | 🗀 *18*
  - linear tables ➤ *1763* | 🗀 *19*

3.1 Monorail guidance systems

✎ *Features*

Monorail guidance systems from Schaeffler are compact linear guidance systems based on rollers or balls and have high rigidity and high load carrying capacity. These guidance systems can support forces from all directions, except for the direction of motion, and moments about all axes.

They are available in various accuracy and preload classes and are therefore also suitable for applications with high guidance and positioning requirements.

Monorail guidance systems are based on a modular concept; this means that, within one size, guideways can be combined with all carriage types. This gives more economical stockholding, simpler fitting and more rapid spare parts purchasing.

In order to reduce maintenance intervals and maintenance costs, monorail guidance systems have a lubricant reservoir. Sealing of the carriages on all sides protects the rolling element systems against contamination even under critical ambient conditions.

The complete standard range of monorail guidance systems is described in detail in the catalogue Monorail Guidance Systems PF 1 and in the online version ***medias*** *professional* *https://medias.schaeffler.com*.

Linear recirculating roller bearing and guideway assemblies

Very high load carrying capacity, very high rigidity

Linear recirculating roller bearing and guideway assemblies RUE are, due to the cylindrical rollers, the monorail guidance systems with the highest load carrying capacity and rigidity from Schaeffler ➤*1751*|*1*. They comprise at least one carriage with a full complement roller system, a guideway, integral elastic wipers on the end faces of the carriage, sealing strips on the upper side and underside of the carriage and closing plugs to close off the fixing holes in the guideway.

1
Linear recirculating roller bearing and guideway assemblies RUE

F_y, F_z = *load-bearing component in y and z direction*

M_x, M_y, M_z = *moment about x, y and z axis*

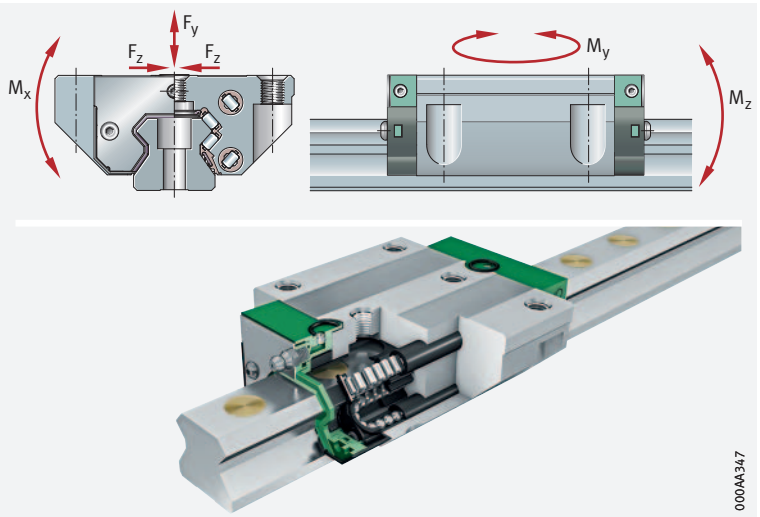

The carriage and guideway of a linear recirculating roller bearing and guideway assembly are matched to each other due to their closely toleranced preload. It may be possible, after consultation, to use carriages and guideways in different combinations.

Suitability

Linear recirculating roller bearing and guideway assemblies are suitable for accelerations up to 100 m/s^2, velocities up to 180 m/min and operating temperatures between –10 °C and +100 °C. They are used in applications with long unrestricted strokes, high and very high loads and high to very high rigidity.

Six-row linear recirculating ball bearing and guideway assemblies

Linear recirculating ball guidance systems with high load carrying capacity and high rigidity

Six-row linear recirculating ball bearing and guideway assemblies KUSE are the guidance systems based on balls with the highest load carrying capacity and rigidity ➤*1752*|*2*. They comprise at least one carriage with a full complement ball system, a guideway, integral elastic wipers on the end faces of the carriage, sealing strips on the underside of the carriage and plastic closing plugs.

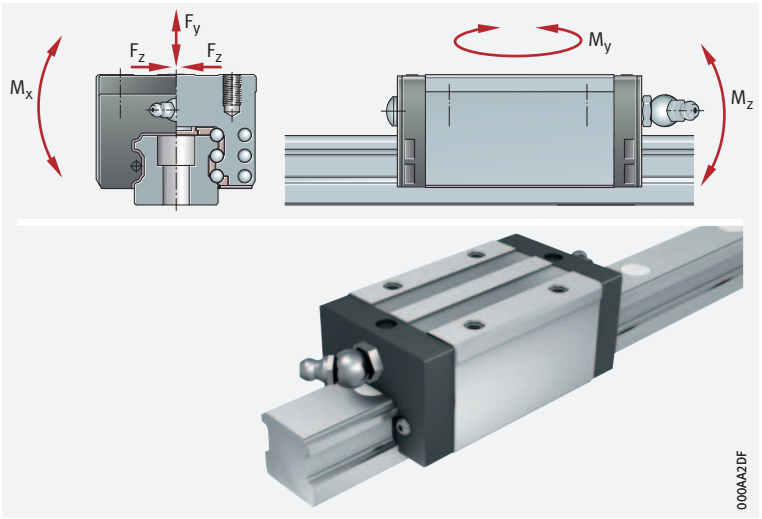

2
Six-row linear recirculating ball bearing and guideway assemblies KUSE

F_y, F_z = *load-bearing component in y and z direction*

M_x, M_y, M_z = *moment about x, y and z axis*

Suitability

Linear recirculating ball bearing and guideway assemblies KUSE are suitable for accelerations up to 150 m/s^2, velocities up to 300 m/min and operating temperatures between –10 °C and +100 °C. They are used in applications with long unrestricted strokes, high and very high loads and high to very high rigidity.

Four-row linear recirculating ball bearing and guideway assemblies

Very extensive range

Four-row linear recirculating ball bearing and guideway assemblies KUVE are the most versatile and most extensively developed range of monorail guidance systems available from Schaeffler ➤ *1752*| *3*. These units comprise at least one carriage with a full complement ball system, a guideway, integral elastic wipers on the end faces of the carriage, sealing strips on the upper and lower sides of the carriage and plastic closing plugs.

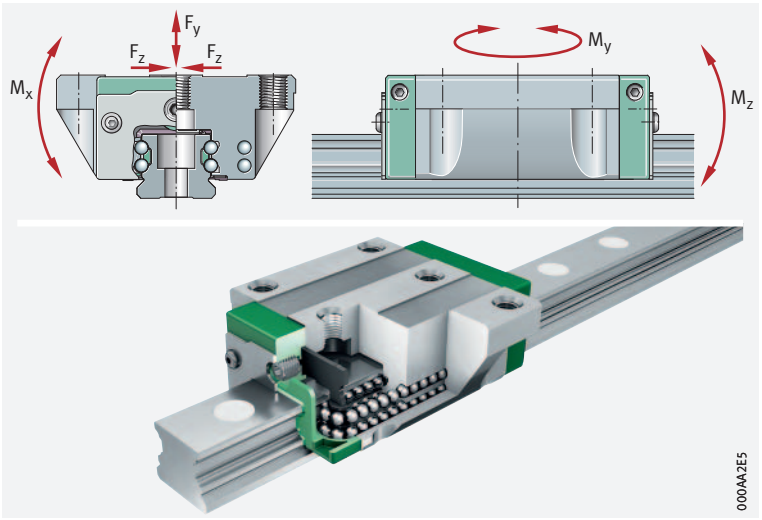

3
Four-row linear recirculating ball bearing and guideway assemblies KUVE

F_y, F_z = *load-bearing component in y and z direction*

M_x, M_y, M_z = *moment about x, y and z axis*

Suitability

Linear recirculating ball bearing and guideway assemblies KUVE are suitable for accelerations up to 150 m/s^2, velocities up to 300 m/min and operating temperatures between –10 °C and +100 °C. They are used in applications with long unrestricted strokes, high loads, high rigidity and low friction.

High-Speed for highly dynamic requirements

Four-row linear recirculating ball bearing and guideway assembly of High-Speed design

The four-row, full complement linear recirculating ball bearing and guideway assembly KUVE..-B-HS of the High-Speed design represents a further expansion of the extensive KUVE range in the field of highly dynamic applications. This variant is extremely robust and is one of the fastest four-row linear recirculating ball bearing and guideway assemblies on the market. Depending on the operating conditions, velocities of up to 10 m/s are possible.

Interchangeable with comparable KUVE units

In order to achieve these values, the end piece and ball return system in the High-Speed design were redesigned, as a result of which the total length of the carriage is slightly larger in comparison with the standard design. The design envelope corresponds to DIN 645-1.
The loads are supported by standard steel rolling elements. The linear recirculating ball bearing and guideway assembly of the High-Speed design is interchangeable with the comparable KUVE-B units.

X-life

The linear recirculating ball bearing and guideway assemblies are supplied in X-life premium quality. These bearings are characterised by improved technological features, increased robustness and longer operating life. Further information on X-life ➤ *10*.

High dynamic characteristics

Linear recirculating ball bearing and guideway assemblies of the High-Speed design are used in applications with very high dynamic requirements. Since hybrid technology has not been used in this case, the full performance capacity of the rolling contact can be implemented – with the associated advantages in terms of load carrying capacity, rigidity, robustness and crash safety.

The High-Speed linear recirculating ball bearing and guideway assemblies are described in detail in the Technical Product Information TPI 145 and in the online version ***medias*** *professional*.

3.2 Hydrostatic compact guidance system

The carriages in monorail guidance systems cannot accommodate vibration damping. In order to allow appropriate damping of vibrations from the adjacent construction, additional elements such as the passive damping carriage RUDS-D for linear recirculating roller bearing and guideway assemblies RUE-E are necessary, which is positioned between the carriages. In order to have the greatest effect when bending vibrations occur, however, the damping element must be positioned at the point of largest deflection. A good knowledge of the vibration patterns is therefore required.

Hydrostatic vibration damping by means of oil cushion

For applications with very high demands on damping, dynamic rigidity and load carrying capacity, there is now a hydrostatic compact guidance system based on our proven linear recirculating roller bearing and guideway assemblies RUE..-E for size 45 ➤ *1753* | *4*.

4
Hydrostatic compact guidance system HLE45-A-XL

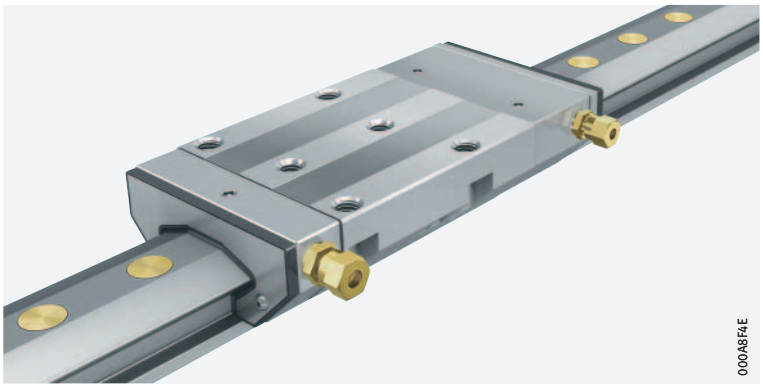

✎ *Functional principle*

A chamber system in the carriage is charged with hydraulic oil. The oil is fed to the pressure side under continuous pressure, thus filling the pressure pockets ➤ *1754* | 🗀 *5*. The integrated chokes are set such that the pressure pockets in the carriage are subjected uniformly to pressure. The unpressurised oil is extracted from the compact guidance system on the suction side and fed back to the oil circuit.

🗀 ***5***
Functional parts

① *Pressure side*
② *Integrated choke*
③ *Pressure pockets*
④ *Extraction side (unpressurised area)*

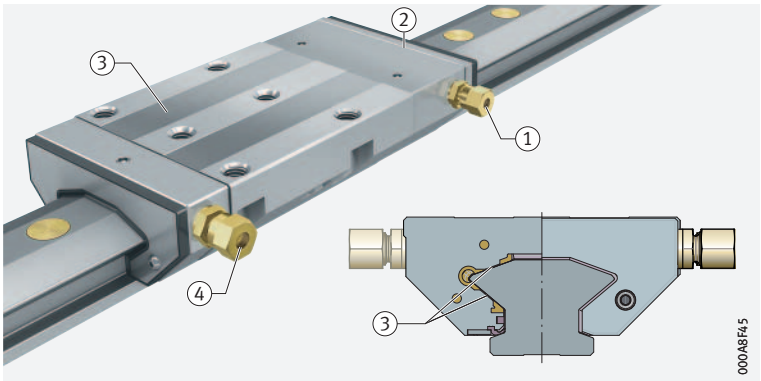

X-life premium quality

X-life

Hydrostatic compact guidance systems HLE45-A-XL are supplied in X-life quality. Further information on X-life ➤ *10*.

✎ *Increased customer benefits due to X-life*

The guidance systems combine damping values of more than 470 000 kg/s with levels of tensile/compressive rigidity that are almost as high as the rigidity of the corresponding rolling element guidance systems. When used in machine tools, this gives higher cutting output, better surface quality and longer tool life.

A special bronze coating in the pressure pockets of the saddle plate gives excellent emergency running characteristics, which means that the guidance system is not damaged even when overloaded or during operation without hydraulic pressure.

✎ *Performance characteristics*

There is approximately zero friction between the guideway and the carriage. The compressive rigidity corresponds to the normal linear recirculating roller bearing and guideway assembly RUE-E. The operating load in machine tools is similar to the standard monorail guidance system. The guidance system can support loads from all directions, apart from the direction of motion, and moments about all axes. It is suitable for accelerations of 100 m/s^2 and velocities up to 120 m/min.

The hydrostatic compact guidance systems are described in detail in the Technical Product Information TPI 149.

3.3 Shaft and track roller guidance systems

Shaft guidance systems

✎ *Linear guidance systems based on ball bearings or plain bearings*

Shaft guidance systems from Schaeffler are linear guidance systems based on ball bearings or plain bearings for various areas of use and applications. Linear ball bearings are available as a light range, compact range and machined range. The mating tracks may be in the form of solid shafts, hollow shafts or supported shaft and support rail units ➤*1755*| 6 and ➤*1755*| 7.

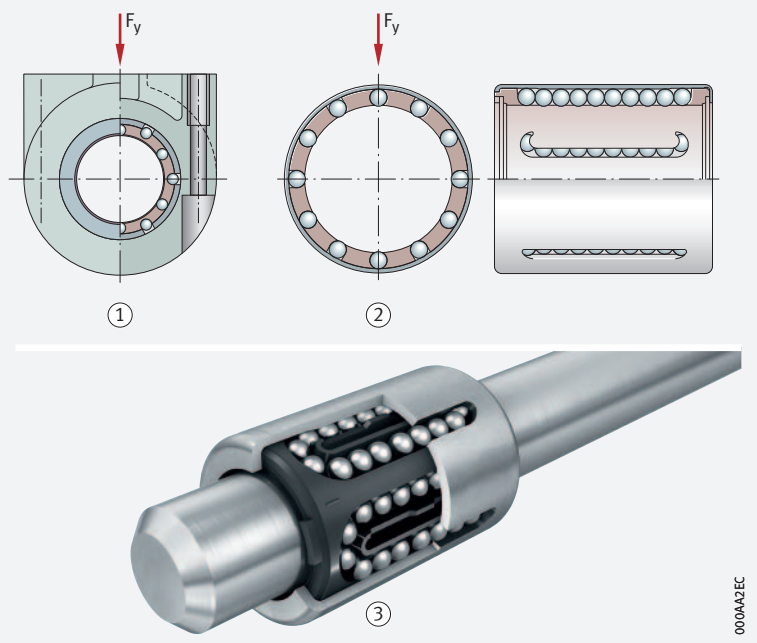

6 *Shaft guidance system WL, closed housing*

F_y = *load-bearing component in y direction*

① *Linear ball bearing in closed housing*

② *Closed linear ball bearing*

③ *Shaft guidance system with linear ball bearing and solid shaft*

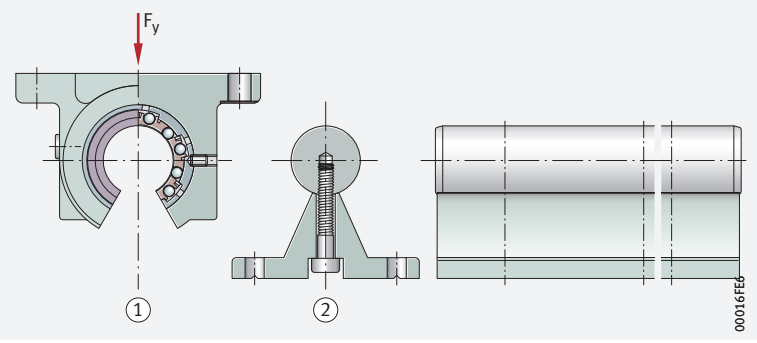

7 *Shaft guidance system WL, housing with segment cutout, supported shaft and support rail unit*

F_y = *load-bearing component in y direction*

① *Linear ball bearing in housing, segment cutout for supported shafts*

② *Shaft and support rail unit with solid shaft*

The range is rounded off by a large selection of linear ball bearing and housing units and linear plain bearing units. In this case, the linear ball bearings or linear plain bearings are already mounted in ready-to-fit housings.

A large number of shafts (with and without machined features), shaft and support rail units and a versatile range of accessories allow a wide spectrum of applications.

Track roller guidance systems

Linear guidance systems with a modular configuration facility

Track roller guidance systems from Schaeffler are linear guidance systems that can be configured on a modular basis for an extremely wide variety of applications. Due to their lightweight construction, they are highly suitable for use in handling systems. They are characterised in particular by quiet running, high traverse velocities, long travel distances and the modular concept.

Possible combinations

Track roller guidance systems comprise one or more carriages made from aluminium, profiled track rollers and a straight or curved guideway ➤1756|8. The carriages are available as hollow section carriages, open carriages, compact carriages and bogie carriages for curved, oval and circular guidance systems.

Guideways of various designs

The guideways are made from aluminium with rolled-in raceway shafts made from rolling bearing steel. The guideways are available in numerous different designs, including a solid profile guideway, hollow section guideway, flat guideway, guideway with slot etc. They are selected as appropriate to the intended purpose of the track roller guidance system.

8
Track roller guidance systems LF

F_y, F_z = *load-bearing component in y and z direction*

M_x, M_y, M_z = *moment about x, y and z axis*

① *Guideway with hollow section profile*
② *Profiled track roller*
③ *Hollow section carriage*

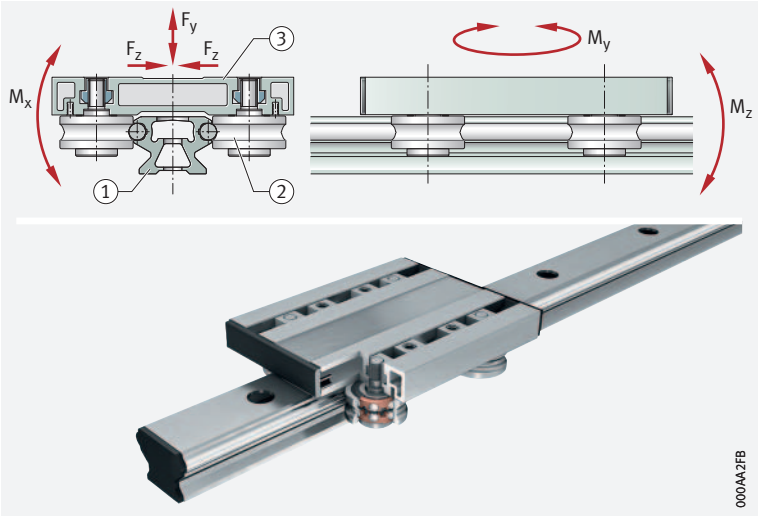

The standard range is described in detail in the catalogue Track Roller Guidance Systems LF 1, in the catalogue Shaft Guidance Systems WF 1 and in the online version ***medias*** *professional* *https://medias.schaeffler.com*.

3.4 Flat cage and recirculating roller guidance systems

Flat cage guidance systems

Where linear locating or non-locating bearings with extremely high load carrying capacity, very smooth running and low, uniform friction are required for limited stroke lengths, for example, flat cage guidance systems are used ➤1757|9. These guidance systems comprise a guideway arrangement separated by needle or cylindrical roller flat cages. The guidance systems have particularly high rigidity, high accuracy and low friction and require significantly less space than other linear guidance systems.

9
Flat cage guidance systems M/V, ML/V, MVZ, J/S

F_y, F_z = *load directions*

① *M/V guideways*
② *J/S guideways*
③ *Angled needle roller flat cage*
④ *Needle roller flat cage*

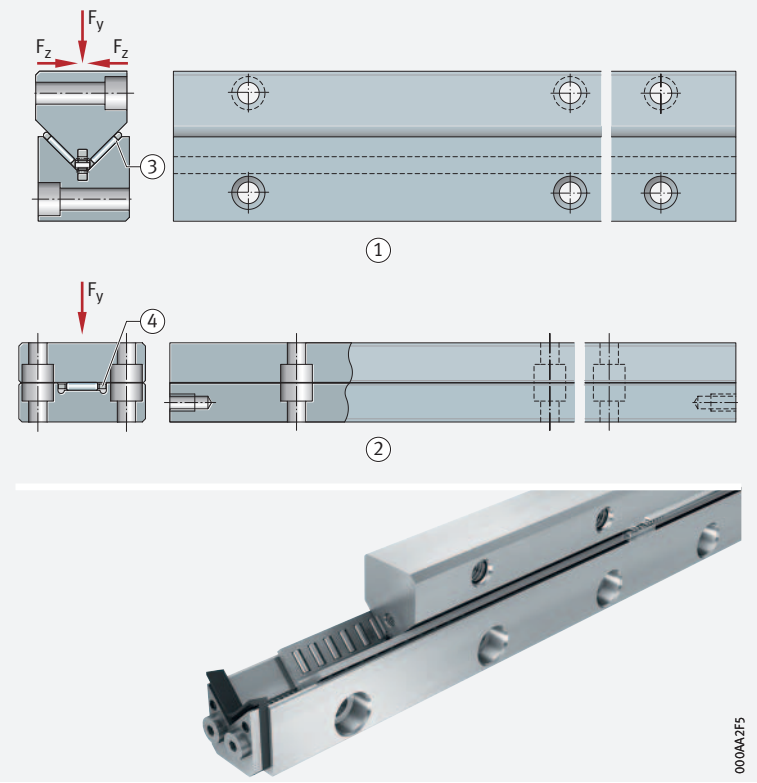

Linear recirculating roller guidance systems

Linear recirculating roller guidance systems comprise a bearing arrangement system for linear motion with unlimited stroke ➤*1757*|*10*. Since the guidance elements have a versatile range of possible arrangements, linear recirculating roller guidance systems are suitable for numerous applications in general machine building, especially for linear guidance systems in machine tools where high guidance and positioning accuracies are required over long traverse distances.

10
Linear recirculating roller guidance systems RUS, RUS..-KS, PR, RUSW

① *Carriage*
② *Rolling element*
③ *Return of rolling elements*
④ *Rolling element in load zone*
⑤ *Guideway*

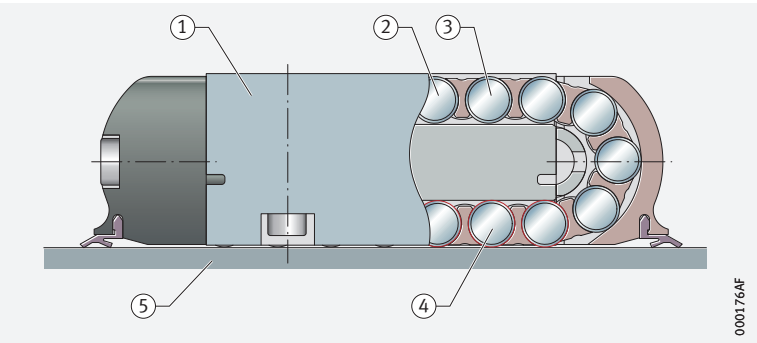

The range of recirculating guidance systems is complemented by:
- adjusting gibs for precise setting of preload
- setting devices for measuring the deformation of the adjacent construction where preload forces must be supported

The standard range is described in detail in the catalogue Flat Cage Guidance Systems and Linear Recirculating Roller Guidance Systems FR 1 and in the online version ***medias*** *professional* *https://medias.schaeffler.com*.

3.5 Miniature guidance systems

✎ *Features*

Miniature guidance systems from Schaeffler are not standard linear guidance systems that have simply been reduced in size, but were specially developed for very small design envelopes. Due to their compact design, they can often be used to replace bearing arrangements that require significantly more space. The guidance systems are preloaded linear locating bearings for limited and unlimited stroke lengths.

Two-row miniature linear recirculating ball bearing and guideway assemblies

✎ *Modular concept*

These units have moderate load carrying capacity and moderate to high moment load carrying capacity. Due to their modular concept, guideways and carriages can be interchanged within each interchangeability and accuracy class. This simplifies the fitting of guidance systems, gives easier spare parts purchasing and allows very economical stockholding. The saddle plates and guideways are corrosion-resistant. Seals on the end faces of the carriages protect the rolling element system against contamination. The carriages are greased and can be relubricated. The guideways and carriages are also available in a wide version ➤ *1758* | *11*.

11
Two-row miniature linear recirculating ball bearing and guideway assemblies KWEM, TKDM

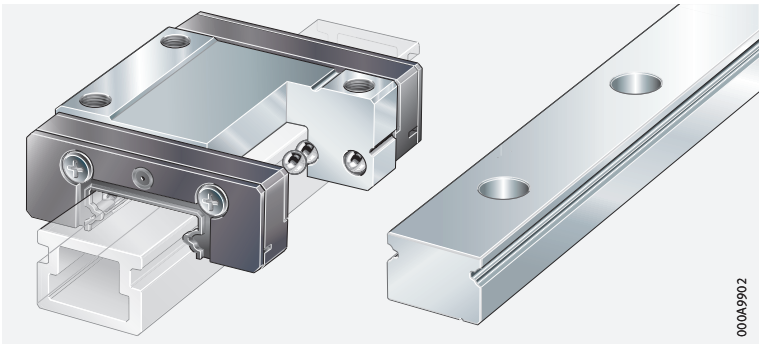

Information on the units is given in the Technical Product Information Corrosion-resistant Miniature Linear Recirculating Ball Bearing and Guideway Assemblies TPI 163 as well as the online version ***medias*** *professional* https://medias.schaeffler.com.

Four-row miniature linear recirculating ball bearing and guideway assemblies

Four-row miniature linear recirculating ball bearing and guideway assemblies are ready-to-fit guidance systems for unlimited stroke lengths ➤ *1758* | *12*. They have high to very high load carrying capacity and rigidity. Due to the lubricant reservoir, the relubrication intervals can be extended. The saddle plates and guideways are corrosion-resistant. Seals on the end faces of the carriages protect the rolling element system against contamination. The carriages are greased and can be relubricated.

12
Four-row miniature linear recirculating ball bearing and guideway assemblies KUME..-C

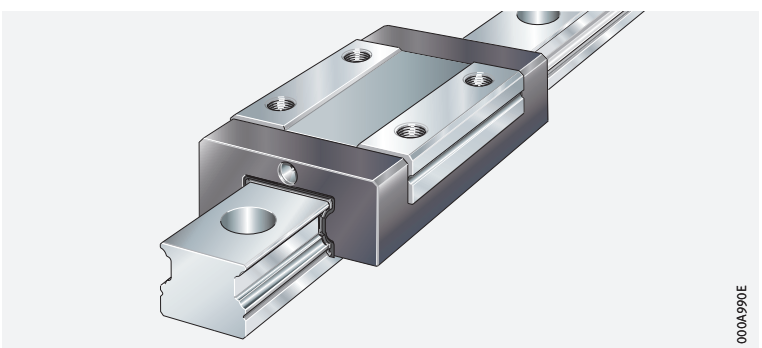

Information on the units is given in the Technical Product Information Corrosion-resistant Miniature Linear Recirculating Ball Bearing and Guideway Assemblies TPI 163 as well as the online version ***medias*** *professional https://medias.schaeffler.com*.

Miniature carriage units

Miniature carriage units with cylindrical roller flat cages are corrosion-resistant, ready-to-fit cage guidance systems for limited stroke lengths ➤ *1759*| *13*. They have a high load carrying capacity, high rigidity and high accuracy whilst requiring very little space.

13
Miniature carriage units RMWE..-VA

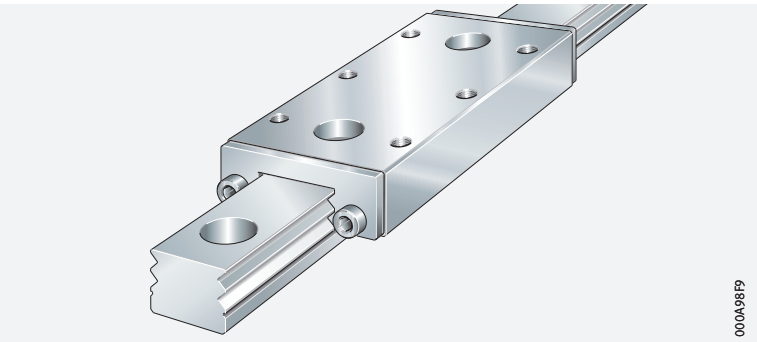

Information on the units is given in the Technical Product Information Corrosion-resistant Miniature Carriage Units TPI 160 as well as the online version ***medias*** *professional https://medias.schaeffler.com*.

3.6 Screw drives

✎ Ball screw, roller screw and planetary screw drives

For a wide range of application areas in machine building and automotive engineering, as well as in handling and automation technology, Schaeffler offers a comprehensive portfolio of ball screw, roller screw and planetary screw drives ➤ *1759*| *14*.

14
Screw drives

① *Ball screw drive KGT*
② *Roller screw drive RGT*
③ *Planetary screw drive PWG*



The function of screw drives

Screw drives comprise a threaded spindle and a threaded nut. Due to the rotation of the spindle, the nut moves in a translational manner on the spindle and thus converts the rotational motion of the drive into translational motion. It is rigidly connected to the adjacent construction and gives axial displacement or positioning of the component. The main load direction of screw drives is axial, radial load is not permissible. The screw drive can be subjected to high dynamic axial load.



Information on the Schaeffler screw drive range is given in the Product Data Sheet PDB 35.

Ball screw drives

In ball screw drives KGT, the load is transmitted from the spindle by means of balls to the nut. The nut (cylindrical nut or flanged nut) has a return system for recirculating the rolling elements.

Characteristics

Ball screw drives are characterised by:

- high load carrying capacity due to the large number of balls
- quiet, uniform running
- reliable function and operational security due to the internal return and recirculation system
- easy-to-fit nut design
- sealed nuts (optional)

Roller screw screws

In roller screw drives RGT, force is transmitted via the thread flanks of the rollers. Since the number of contact surfaces here is significantly higher than in ball screw drives, roller screw drives have significantly higher load carrying capacity. Roller screw drives have significantly smaller pitch values than ball screw drives. Since there is no recirculation of balls, in contrast to KGT, very quiet running is achieved. In the case of preloaded double threaded nuts, the load carrying capacity is lower due to the load-bearing length of the threaded rollers – smaller pitch – than for single preloaded nuts.

Design of roller screw drives

Roller screw drives comprise, as in the case of ball screw drives, a threaded spindle and a threaded nut. However, the threaded nut contains threaded rollers arranged parallel to the axis. As the threaded spindle rotates, the threaded rollers rotate in planetary motion about the threaded spindle without axial displacement. The rotational motion of the nut and planets is synchronised by means of gear rings in order to prevent axial displacement. As a result, a high positional accuracy is achieved. Schaeffler roller screw drives are available, in various series and with corresponding bearing components, as ready-to-fit units. Roller screw drives differ essentially in terms of the threaded nut design.

Characteristics

Roller screw drives are characterised by:

- high axial load carrying capacity
- high axial rigidity
- small thread pitch values
- low running noise
- simple mounting and dismounting of the spindle nut
- high operational security
- high positional accuracy

Areas of application

Due to their high rigidity and axial load carrying capacity, roller screw drives are used particularly in high precision machine tools, measuring machinery and industrial robots as well as in electronic component manufacture and precision engineering.

Planetary screw drives

Planetary screw drives PWG are characterised by a very high performance density. In these planetary screw drives, force is transmitted via the flanks of the rollers, spindle and nut ➤1761|15. Due to the large number of contact points, a very high axial load carrying capacity is achieved. Due to the very small pitch values, high axial operating forces can be achieved with small drive units (without a gearbox).

15
Planetary screw drive PWG, exploded view



✎ *Structure*

Planetary screw drives PWG comprise a threaded spindle and cylindrical nut or flanged nut. The cylindrical nut and flanged nut differ only in the method by which they are fixed to the table.

The nut contains planets arranged parallel to the axis. The planets roll uniformly on the threaded spindle and the nut. Planetary screw drives are designed for temperatures between –10 °C and +80 °C.

✎ *Characteristics*

Advantages of planetary screw drives:

- very economical drive
- very high load carrying capacity due to the large number of rolling contacts
- high axial rigidity
- preloaded clearance-free
- very small pitch values (< 1 mm)
- very quiet running (no rotating rolling elements)
- simple, robust design
- very high performance density
- high reliability and operational security

Detailed information on planetary screw drives is given in the Technical Product Information Planetary Screw Drives TPI 254.

3.7 Driven linear units

✎ *Features*

Rapid progress in the automation of production and assembly processes has pushed forward the development of complete, driven assemblies. These comprise a high precision guidance system, a rigid support rail, a wear-free servomotor drive and a user-friendly control system.

Linear actuators

Linear actuators from Schaeffler are integral modular systems containing all the components required for operation. The linear actuators are guided by linear recirculating ball bearing and guideway assemblies of series KUVE or by track roller guidance systems LF. The drive function is carried out by a ball screw drive, direct drive or toothed belt ➤*1762*|*16* to ➤*1762*|*18*.

16
Linear actuators with linear recirculating ball bearing and guideway assemblies and toothed belt drive

MKU..-ZR

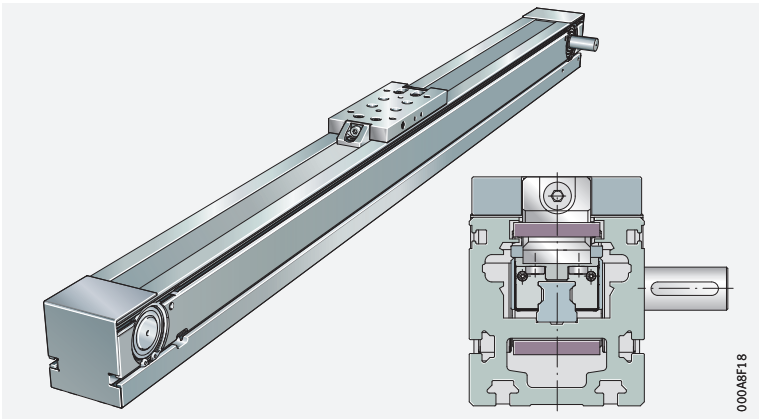

17
Linear actuators with linear recirculating ball bearing and guideway assemblies and ball screw drive

MKU..-KGT

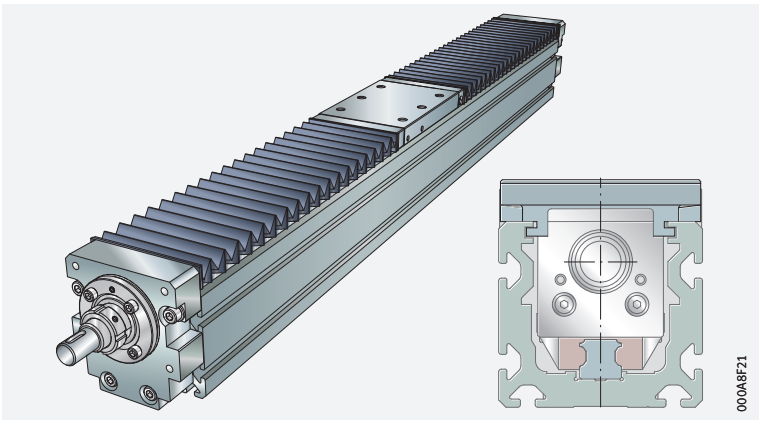

18
Linear actuators with linear recirculating ball bearing and guideway assemblies and ball screw drive

MKUVS32-KGT

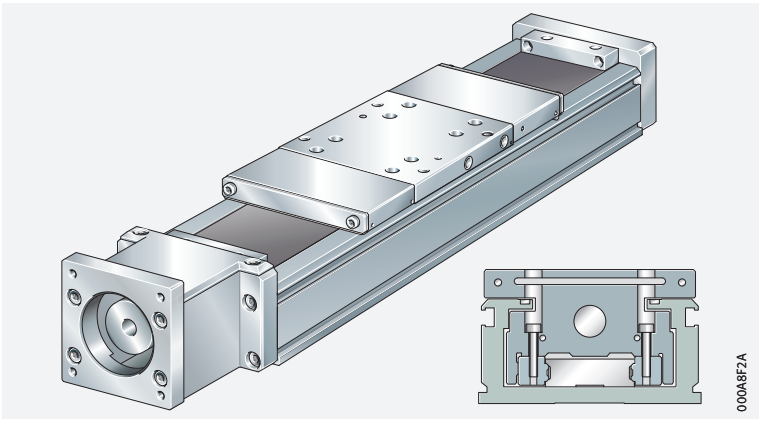

Linear tables

Linear tables from Schaeffler are used where larger masses are moved in one or more axes. Due to the large distances between support points, linear tables are also capable of supporting high torques. The guidance systems used are linear ball bearings or linear recirculating ball bearing and guideway assemblies.

Linear tables are available without a drive mechanism, with a ball screw drive, with a trapezoidal lead screw drive or a direct drive ➤*1763*|*19* and ➤*1763*|*20*. They are available with an open or closed shaft guidance system.

19
Linear tables without drive

LT

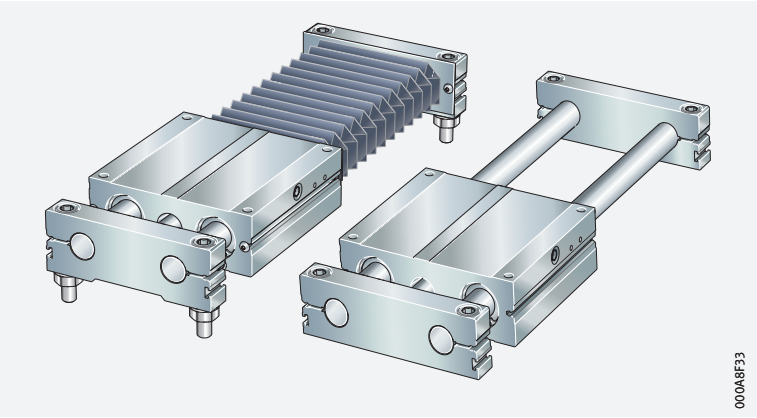

20
Linear tables with trapezoidal lead screw drive

LT

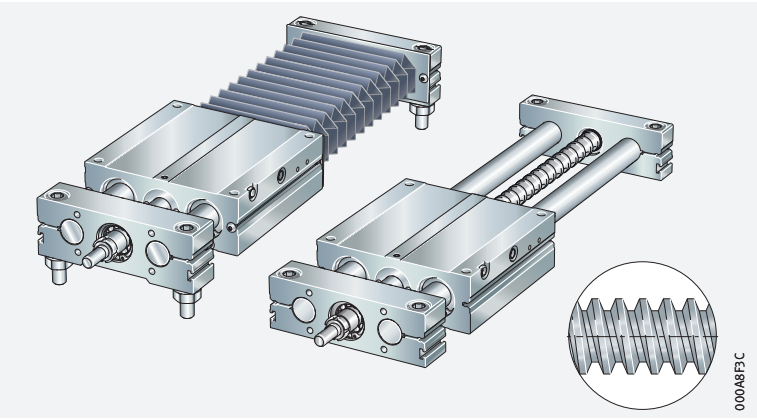

The INA range of driven linear units is complemented by suitable controllers, motors and gearboxes which are optimally matched to each other.

Detailed information on these units is given in the catalogue Driven Linear Units AL 1.

4 Spherical plain bearings, rod ends

4.1 Spherical plain bearings, maintenance-free

Features

Maintenance-free spherical plain bearings are used where:

- there are particular requirements for operating life under maintenance-free operation
- for reasons of lubrication, bearings with a metallic sliding contact surface are not suitable, for example under unilateral load

Spherical plain bearings allow spatial adjustment movements and, depending on the bearing type, are preferably used to support radial, combined or axial loads.

The complete range is described in the catalogue Plain Bearings HG 1 and in the online version ***medias*** *professional https://medias.schaeffler.com*.

Sliding layers

Maintenance-free spherical plain bearings have special sliding layers based on PTFE (polytetrafluoroethylene). In terms of performance capability, these are:

- ELGOGLIDE, the highest performance sliding layer
- ELGOGLIDE-W11, the sliding layer for low contact pressures and minimal friction
- PTFE-bronze film
- PTFE composite material

These materials form the slideway of the outer ring or the housing locating washer. They transmit the forces occurring and perform the lubrication function. Maintenance-free bearings must not be lubricated.

ELGOGLIDE

The sliding layer comprises a 0,5 mm thick layer of ELGOGLIDE, is embedded in synthetic resin and is attached by a high strength bond to the support body. The flow behaviour of the sliding layer is, in conjunction with the support body, almost negligible even under very high load. The adhesive bond is resistant to moisture and swelling.

ELGOGLIDE is a registered trademark and product of Schaeffler.

ELGOGLIDE designs

For differing requirements, the following are available:

- ELGOGLIDE
  the standard material for very high dynamic contact pressures from 25 N/mm^2 to 300 N/mm^2 and a long operating life
- ELGOGLIDE-W11
  the material for dynamic contact pressures from 1 N/mm^2 to 100 N/mm^2 and with low coefficients of friction even at low contact pressures

PTFE-bronze film

The PTFE-bronze film (metal lattice material) is fixed to the outer ring curved surface. The metal lattice is made from high strength bronze and acts as a stabiliser for the sintered PTFE composite material.

PTFE composite material

The PTFE composite material comprises sheet steel with bronze attached by sintering and an embedded plastic composite material made from PTFE. The composite material is embedded with form contact between the inner ring curved surface and the outer steel surface.

Radial spherical plain bearings, radial large spherical plain bearings

Radial spherical plain bearings comprise inner and outer rings with maintenance-free sliding layers made from ELGOGLIDE, PTFE composite material or PTFE-bronze film.

Sealed spherical plain bearings are protected by lip seals against contamination and water spray. These bearings have the suffix 2RS, 2TS or 2RS2.

1
Radial spherical plain bearings, maintenance-free

① *Sliding contact surface hard chromium/PTFE composite material, open: GE..-UK*
② *Sliding contact surface hard chromium/PTFE composite material, open: GE..-FW*
③ *Sliding contact surface hard chromium/ELGOGLIDE, with lip seal: GE..-UK-2RS*
④ *Sliding contact surface hard chromium/ELGOGLIDE, with high performance seal: GE..-UK-2TS*
⑤ *Sliding contact surface steel/PTFE-bronze film, open: GE..-PW*



2
Radial large spherical plain bearings, maintenance-free, X-life design

① *Sliding contact surface hard chromium/ELGOGLIDE, open: GE..-DW*
② *Sliding contact surface hard chromium/ELGOGLIDE, with lip seal: GE..-DW-2RS2*

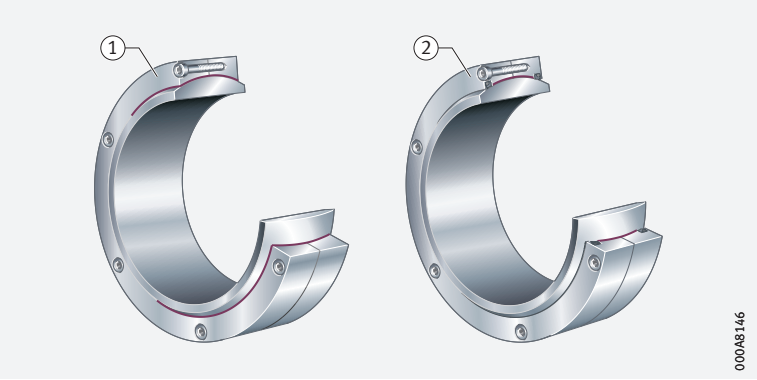

✎ *X-life* Radial large spherical plain bearings from d = 320 mm are X-life bearings.

1 *Series and design*

Series	Sliding layer	DIN ISO	Dimension series	Shaft d mm	
				from	to
GE..-UK-2RS	ELGOGLIDE	12240-1	E	17	300
GE..-UK-2TS	ELGOGLIDE	12240-1	E	30	300
GE..-FW-2RS	ELGOGLIDE	12240-1	G	25	280
GE..-FW-2TS	ELGOGLIDE	12240-1	G	25	280
GE..-DW	ELGOGLIDE (X-life)	12240-1	C	320	1000
GE..-DW-2RS2	ELGOGLIDE (X-life)	12240-1	C	320	1000
GE..-UK	PTFE composite material	12240-1	E	6	30
GE..-FW	PTFE composite material	12240-1	G	6	25
GE..-PW	PTFE-bronze film	12240-1	K	6	30

Angular contact spherical plain bearings

Angular contact spherical plain bearings comprise inner and outer rings with ELGOGLIDE. In addition to radial forces, they can also support axial forces and are suitable for alternating dynamic loads.

3 *Angular contact spherical plain bearing, maintenance-free*

① *Sliding contact surface hard chromium/ELGOGLIDE, open: GE..-SW*

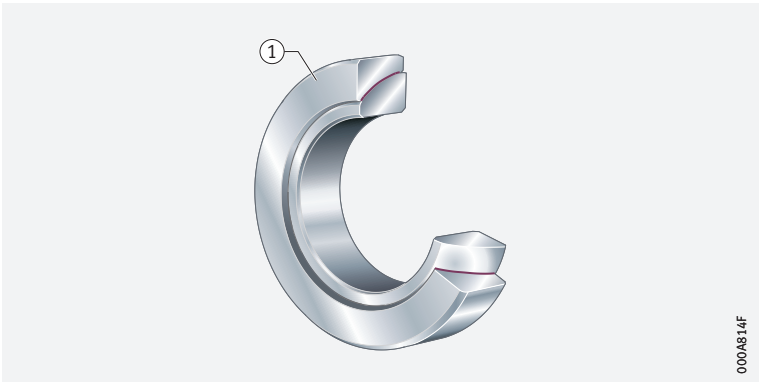

2 *Series and design*

Series	Sliding layer	DIN ISO	Shaft d mm	
			from	to
GE..-SW	ELGOGLIDE	12240-2	25	200

Axial spherical plain bearings, axial large spherical plain bearings

Axial spherical plain bearings comprise shaft locating and housing locating washers with ELGOGLIDE. They are preferably used to support axial forces and are suitable as support or base bearings.

4 *Axial spherical plain bearing, maintenance-free*

① *Sliding contact surface hard chromium/ELGOGLIDE, open: GE..-AW*

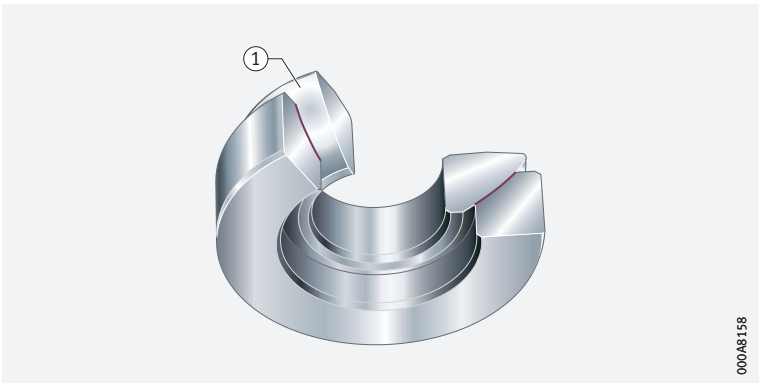

X-life

Axial large spherical plain bearings from d = 220 mm are X-life bearings.

3 *Series and design*

Series	Sliding layer	DIN ISO	Shaft d mm	
			from	to
GE..-AW	ELGOGLIDE	12240-3	10	360

4.2 Spherical plain bearings, requiring maintenance

Radial spherical plain bearings

Radial spherical plain bearings comprise inner and outer rings with steel/steel or steel/bronze sliding contact surfaces and are lubricated via the inner and outer ring. They can support radial forces, transmit motion and loads with low moment levels and thus keep bending stresses away from the construction elements.

5 *Radial spherical plain bearings, requiring maintenance*

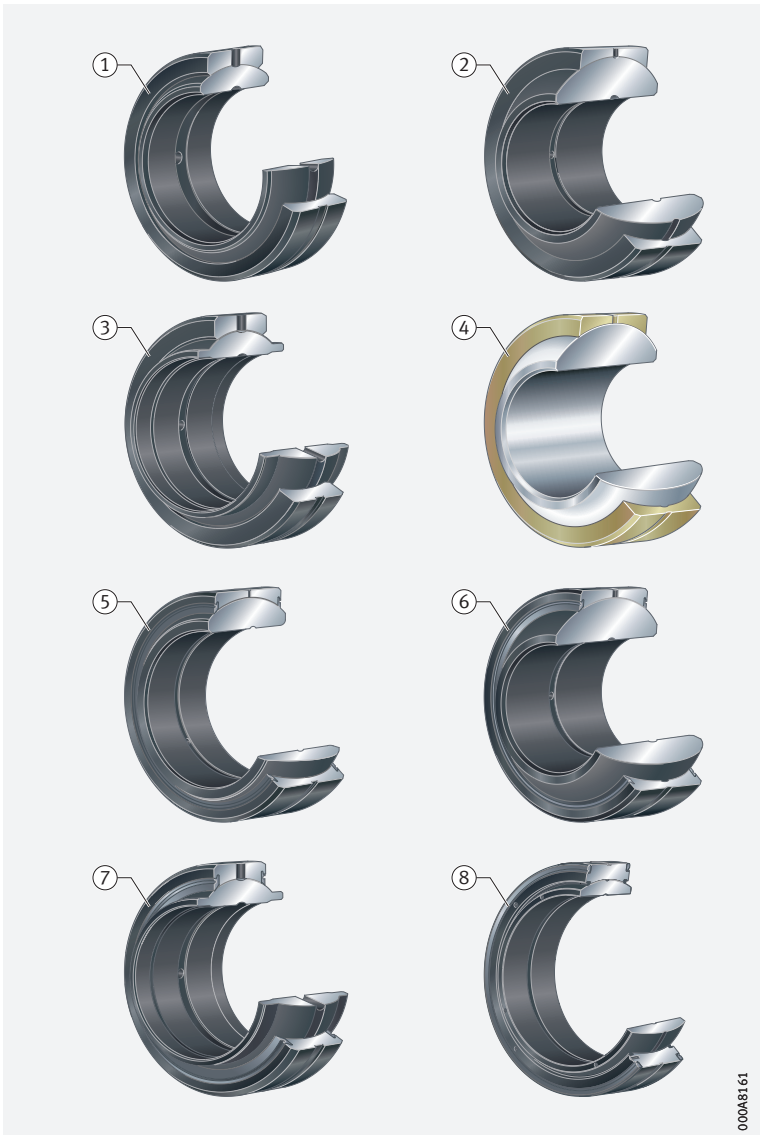

① *Sliding contact surface steel/steel, metric or inch sizes, open: GE..-DO, GE..-ZO*

② *Sliding contact surface steel/steel, open: GE..-FO*

③ *Sliding contact surface steel/steel, cylindrical extensions on inner ring, open: GE..-LO*

④ *Sliding contact surface steel/bronze, open: GE..-PB*

⑤ *Sliding contact surface steel/steel, with lip seal or high performance seal: GE..-DO-2RS, GE..-DO-2TS*

⑥ *Sliding contact surface steel/steel, with lip seal or high performance seal: GE..-FO-2RS, GE..-FO-2TS*

⑦ *Sliding contact surface steel/steel, cylindrical extensions on inner ring, with lip seal: GE..-HO-2RS*

⑧ *Radial large spherical plain bearing, sliding contact surface steel/steel, with lip seal: GE..-DO-2RS4*

The bearings are particularly suitable for alternating loads with impact and shock type stresses and support axial loads in both directions.

Sealed spherical plain bearings are protected against contamination and water spray by lip seals and have the suffix 2RS, 2TS or 2RS4.

4 *Series and design*

Series[1)]	Sliding layer	DIN ISO	Dimension series	Shaft d mm	
				from	to
GE..-DO	Steel/steel	12240-1	E	6	300
			C	320	1000
GE..-DO-2RS			E	17	300
GE..-DO-2TS			E	30	140
GE..-DO-2RS4			C	320	1000
GE..-HO		–	–	20	120
GE..-HO-2RS		–	–	20	120
GE..-FO		12240-1	G	6	280
GE..-FO-2RS			G	15	280
GE..-FO-2TS			G	25	120
GE..-LO			W	12	320
GE..-PB	Steel/bronze		K	6	30

1) *Radial spherical plain bearings GE..-ZO are available in inch sizes and with a shaft diameter from 0,75 inch to 5 inch.*

Angular contact spherical plain bearings

Angular contact spherical plain bearings GE..-SX correspond to DIN ISO 12240-2. They have inner rings with a curved outer slideway and outer rings with a concave inner slideway, where a steel/steel sliding contact surface is present. The bearings are available for shaft diameters from 25 mm to 200 mm. Other sizes are available by agreement.

6 *Angular contact spherical plain bearing, requiring maintenance*

① *Sliding contact surface steel/steel, open: GE..-SX*



Angular contact spherical plain bearings can support axial forces as well as radial forces. As a result, they are suitable for alternating dynamic loads.

They transmit motion and loads with low moment levels, keep bending stresses away from the adjacent structure and are lubricated with grease via the outer ring.

Axial spherical plain bearings

Axial spherical plain bearings GE..-AX correspond to DIN ISO 12240-3. In these units, the shaft locating washer is supported in the ball socket-shaped sliding zone of the housing locating washer, where a steel/steel sliding contact surface is present. The bearings are available for shaft diameters from 10 mm to 200 mm. Other sizes are available by agreement.

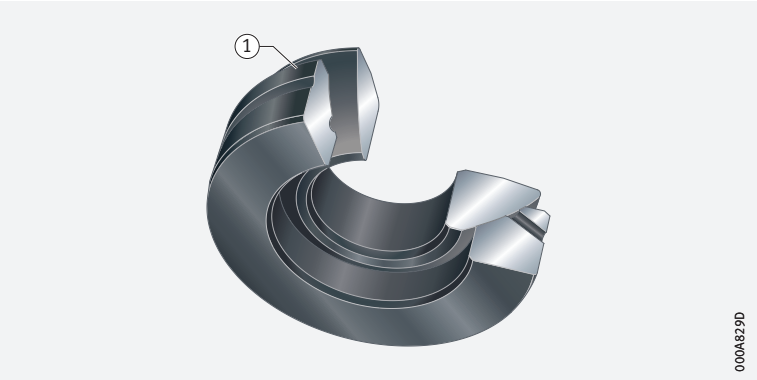

7 *Axial spherical plain bearing, requiring maintenance*

① *Sliding contact surface steel/steel, open: GE..-AX*

The bearings can support axial forces and transmit support forces with low moment levels into the adjacent construction. In order to support radial forces, they can be combined with radial spherical plain bearings of dimension series E in accordance with DIN ISO 12240-1.

The bearings are lubricated via the housing locating washer.

4.3 Rod ends, maintenance-free

Features

Maintenance-free rod ends and maintenance-free corrosion-resistant rod ends comprise a housing with integral shank and a maintenance-free spherical plain bearing. The shank has an internal or external thread, the spherical plain bearing is firmly seated and located in the housing.

Depending on their type, the rod ends are available either open or sealed on both sides. The rod ends are protected against corrosion by a zinc coating.

The sliding layer between the inner ring and outer ring is PTFE composite material, ELGOGLIDE or PTFE-bronze film.

Area of application

Maintenance-free rod ends can support radial loads in a tensile or compressive direction. They are particularly suitable for slow movements with small to moderate swivel angles and unilateral loads. For alternating loads, rod ends with bearings of series GE..-UK-2RS(-2TS) and GE..-FW-2RS(-2TS) can be used.

Dimension series E

Rod ends to DIN ISO 12240-4, dimension series E, incorporate radial spherical plain bearings GE..-UK or GE..-UK-2RS(-2TS) and a right or left hand internal or external thread ➤ *1769* | *8*. The sliding contact surfaces are hard chromium/PTFE composite material or hard chromium/ELGOGLIDE. The thin walled design of the eye housing allows compact adjacent constructions.

These rod ends are also available by agreement with radial spherical plain bearings GE..-FW or GE..-FW-2RS(-2TS) of dimension series G.

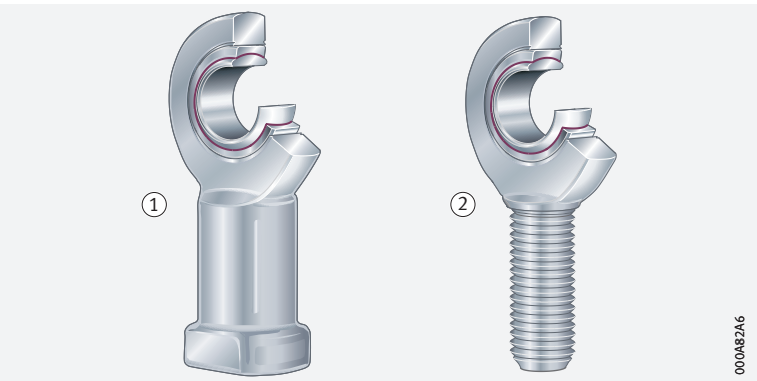

8 *Rod ends, maintenance-free, dimension series E*

① *With internal thread*
② *With external thread*

Dimension series K

Rod ends to DIN ISO 12240-4, dimension series K, incorporate radial spherical plain bearings GE..-PW and a right or left hand internal or external thread ➤*1770*|*9*. The sliding contact surface is steel/PTFE-bronze film.

9
Rod ends, maintenance-free, dimension series K

① *With internal thread*
② *With external thread*

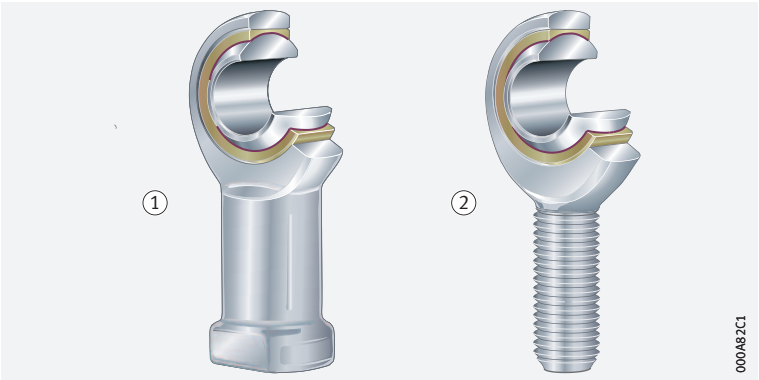

Corrosion-resistant rod ends

Corrosion-resistant rod ends to DIN ISO 12240-4, dimension series K, incorporate radial spherical plain bearings GE..-PS and a right or left hand internal or external thread ➤*1770*|*10*. The sliding contact surface comprises corrosion-resistant steel and corrosion-resistant PTFE-bronze film which is attached to the curved outer ring surface.

The shank has a thread to DIN 13 and the diameter range extends from 5 mm to 30 mm. The bore tolerance of the spherical plain bearings is H7 Ⓔ.

Corrosion-resistant rod ends with an internal thread are also available with CETOP mounting dimensions to ISO 8139 for pneumatic cylinders. These are used in preference in control and automation engineering.

10
Corrosion-resistant rod ends, maintenance-free, dimension series K

① *With internal thread*
② *With external thread*

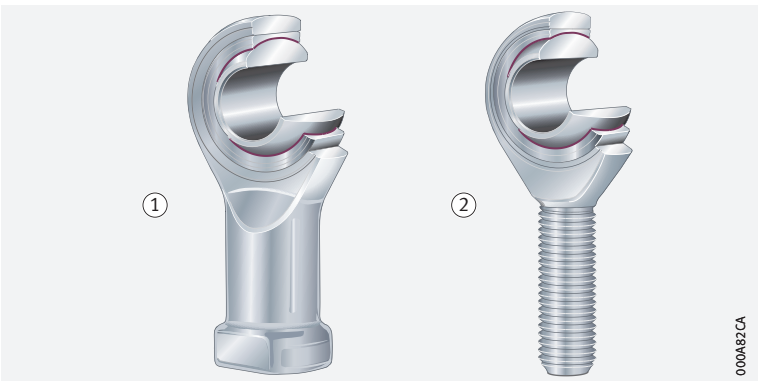

Series, sliding layer, standard

Maintenance-free rod ends are designed, according to their specific series, with different sliding layers ➤ *1771* | ▦ *5* and ➤ *1771* | ▦ *6*.

▦ *5*
Series and design for sliding layer ELGOGLIDE or PTFE composite material

Series	Thread	DIN ISO	Dimension series	Shaft d mm	
				from	to
GIR..-UK	Internal, right hand	12240-4	E, type F	6	30
GIR..-UK-2RS				17	80
GIR..-UK-2TS				30	80
GIL..-UK	Internal, left hand			6	30
GIL..-UK-2RS				17	80
GIL..-UK-2TS				30	80
GAR..-UK	External, right hand	12240-4	E, type M	6	30
GAR..-UK-2RS				17	80
GAR..-UK-2TS				30	80
GAL..-UK	External, left hand			6	30
GAL..-UK-2RS				17	80
GAL..-UK-2TS				30	80

▦ *6*
Series and design for sliding layer PTFE-bronze film

Series	Thread	DIN ISO	Dimension series	Shaft d mm	
				from	to
GIKR..-PW	Internal, right hand	12240-4	K, type F	6	30
GIKSR..-PS				5	30
GIKPR..-PW	Internal, right hand, fine pitch thread for standard pneumatic cylinders to DIN ISO 15552				
GIKPSR..-PS					
GIKL..-PW	Internal, left hand			6	30
GIKSL..-PS				5	30
GAKR..-PW	External, right hand	12240-4	K, type M	6	30
GAKSR..-PS				5	30
GAKL..-PW	External, left hand			6	30
GAKSL..-PS				5	30

4.4 Rod ends, requiring maintenance

Rod ends requiring maintenance comprise a housing with integral shank and a spherical plain bearing requiring maintenance. The shank has an internal or external thread, the spherical plain bearing is firmly seated and located in the housing.

Depending on their type, the rod ends are available either open or sealed on both sides. The rod ends are protected against corrosion by a zinc coating.

✎ *Area of application*

Rod ends requiring maintenance can support radial forces in a tensile or compressive direction and can transmit motions and forces with low moment levels. They are particularly suitable for alternating radial loads and, in certain circumstances, for unilateral loads. The thin walled design of the eye housing allows compact adjacent constructions.



Dimension series E

Rod ends to DIN ISO 12240-4, dimension series E, incorporate radial spherical plain bearings GE..-DO or GE..-DO-2RS(-2TS) and a right or left hand internal or external thread. The sliding contact surface is formed by steel inner and outer rings ➤*1772*|*11*. They can be relubricated (with the exception of series d = 6 mm to d = 12 mm) via the lubrication nipple or the housing bore.

11
Rod ends requiring maintenance, dimension series E, sliding contact surface steel/steel

① *With internal thread*
② *With external thread*

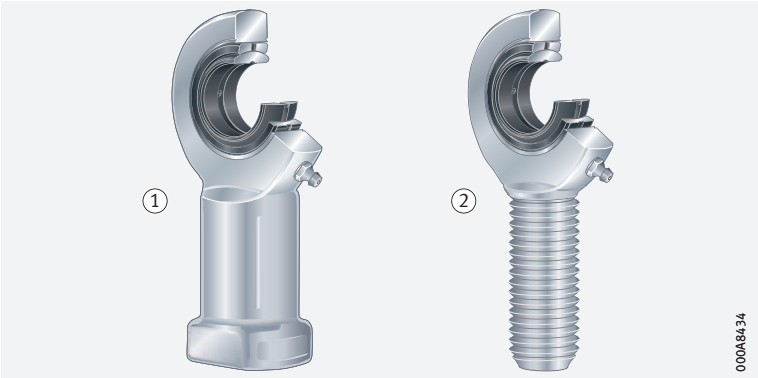

Dimension series K

Rod ends to DIN ISO 12240-4, dimension series K, incorporate radial spherical plain bearings GE..-PB and a right or left hand internal or external thread. The sliding contact surface is formed by steel inner rings and bronze outer rings ➤*1772*|*12*. They can be relubricated via funnel type lubrication nipples in accordance with DIN 3405 in the eye housing.

12
Rod ends requiring maintenance, dimension series K, sliding contact surface steel/bronze

① *With internal thread*
② *With external thread*

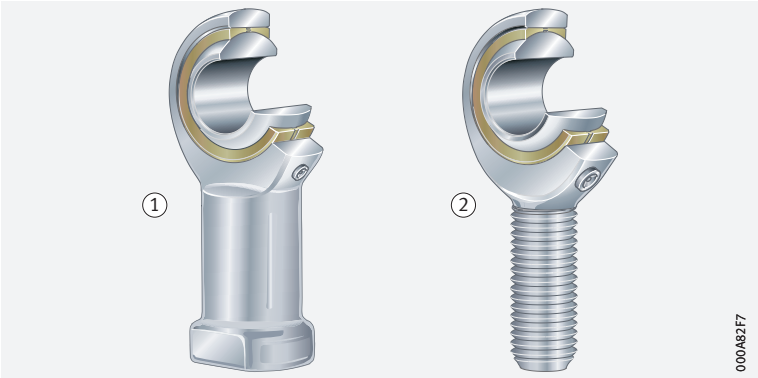

Sealing

Sealed rod ends have the suffix 2RS or 2TS. They are protected by lip seals on both sides against contaminants and water spray.
Rod ends GIR..-DO-2TS, GIL..-DO-2TS, GAR..-DO-2TS and GAL..-DO-2TS are sealed on both sides by means of integrated, triple lip high performance seals. Rod ends of dimension series K are not sealed.

Series, sliding contact surface, standard

Rod ends requiring maintenance are designed, according to their specific series, with different sliding contact surfaces ➤*1773*|▦*7*.

▦*7*
Series and design

Series	Sliding contact surface	Thread	DIN ISO	Dimension series	Shaft d mm	
					from	to
GIR..-DO	Steel/ steel	Internal, right hand	12240-4	E, type F	6	30
GIR..-DO-2RS					17	80
GIR..-DO-2TS					30	80
GIL..-DO		Internal, left hand			6	30
GIL..-DO-2RS					17	80
GIL..-DO-2TS					30	80
GAR..-DO		External, right hand		E, type M	6	30
GAR..-DO-2RS					17	80
GAR..-DO-2TS					30	80
GAL..-DO		External, left hand			6	30
GAL..-DO-2RS					17	80
GAL..-DO-2TS					30	80
GIKR..-PB	Steel/ bronze	Internal, right hand	12240-4	K, type F	6	30
GIKL..-PB		Internal, left hand				
GAKR..-PB		External, right hand		K, type M		
GAKL..-PB		External, left hand				

4.5 Hydraulic rod ends, requiring maintenance

✎*Features*

Hydraulic rod ends are fitted with radial spherical plain bearings GE..-LO or GE..-DO. They have steel/steel sliding contact surfaces, can support radial forces in a tensile or compressive direction, transmit movements and forces at low moment levels and are suitable for alternating loads.

The rod ends can be screw mounted using a thread in the shank or welded in place by means of circular or rectangular welding faces.

Rod ends with a circular welding face have a 45° welding chamfer and a centring facility by means of a concentric locating pin.
They are particularly suitable for piston rods. Hydraulic rod ends with a rectangular cross-section are particularly suitable for cylinder bases.

The rod ends are slotted on both sides up to d ≦ 50 mm and on one side from d > 50 mm; they can be relubricated via taper type lubrication nipples.



Hydraulic rod ends with thread clamping device

Rod ends GIHNRK..-LO conform to DIN 24338, ISO 6982 for standard hydraulic cylinders in accordance with CETOP recommendation RP 58 H and to DIN 24333, DIN 24336, DIN ISO 6020-1 and DIN ISO 6022.

The spherical plain bearings are located in the rod end by means of retaining rings. The thread clamping device comprises two hexagonal socket head screws to DIN EN ISO 4762.

Rod ends GIHRK..-DO are particularly suitable for hydraulic cylinders. They have very small linkage distances with maximum stroke utilisation. These rod ends are also available with maintenance-free spherical plain bearings GE..-UK-2RS(-2TS) and GE..-FW-2RS(-2TS).

8 *Series, thread type, standard*

Series	Thread	DIN ISO	Shaft d mm	
			from	to
GIHNRK..-LO	Right hand	6982	12	250
GIHRK..-DO	Right hand	–	20	120

Hydraulic rod ends with welding face

Features

Rod ends GK..-DO are designed to DIN ISO 12240-4, dimension series E, type S, with a circular welding face, a centring pin on the shank base and a 45° welding chamfer. They are suitable for fixing to piston rod ends and cylinder bases.

The spherical plain bearings are located in the housing by staking on both sides.

Rod ends GF..-DO are available in a heavy-duty design with a rectangular welding face. The spherical plain bearings are located in the housing by retaining rings and can be dismantled. These rod ends are suitable for fixing to hydraulic cylinder bases.

By agreement, hydraulic rod ends GF and GK are also available with radial spherical plain bearings GE..-UK-2RS (-2TS) or alternatively with GE..-FW-2RS (-2TS).

9 *Series, thread type, standard*

Series	Welding face	DIN ISO 12240-4	Shaft d mm	
			from	to
GK..-DO	Circular	Dimension series E, type S	10	80
GF..-DO	Rectangular	–	20	120

5 Composite plain bearings with plain bushes

✎ *Product range* Schaeffler supplies plain bushes and metal/polymer composite plain bearings for diverse requirements ➤ *1784* | ▦ *9*.

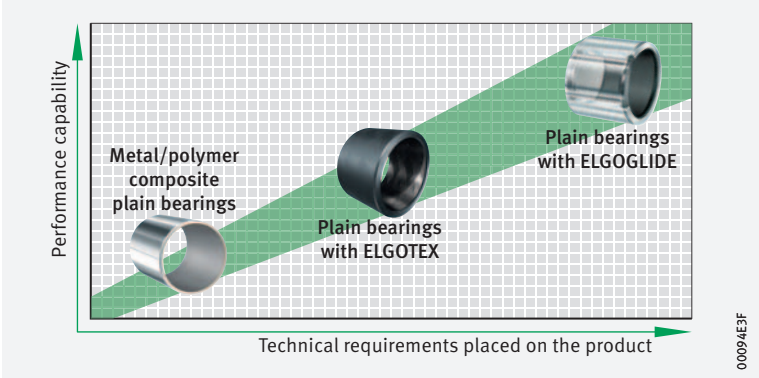

5.1 Metal/polymer composite plain bearings

General features

These plain bearings are suitable for very small radial or axial design envelopes. They are available as bushes, flanged bushes, thrust washers and strips. The bushes are available in metric sizes and in inch sizes.

The bushes and flanged bushes are rolled from a cut section of strip and have a butt joint over the entire width of the bearing.

The plain bearings are supplied with either steel backing or bronze backing. Bearings with a bronze backing have high corrosion resistance and very good thermal conductivity and are antimagnetic.

There are different materials for metal/polymer composite plain bearings, the maintenance-free E40 and E40-B or the low-maintenance E50.

The maintenance-free and low-maintenance materials conform to the regulations for lead-free plain bearings.
They thus fulfil the Directive 2000/53/EC (End-Of-Life Vehicles Directive) and the Directive 2011/65/EU (RoHS-II) for the restriction of hazardous substances.

Further information:

- Catalogue Plain Bearings HG 1
- Metal/polymer Composite Plain Bearings TPI 211
- Product selection and information system ***medias*** *professional* *https://medias.schaeffler.com*
- Download and ordering via *https://www.schaeffler.de/std/1D64*

Plain bearings – material E40, maintenance-free

The maintenance-free plain bearing material E40 is, due to the dry lubricant PTFE, intended for dry running. These bearings are thus particularly suitable where the bearing position must be maintenance-free, there is a risk of lubricant starvation or where lubricant is unacceptable or undesirable. The material E40 can be used not only for rotary and oscillating motion but also for short stroke linear motion.

For maintenance-free metal/polymer composite plain bearings from Schaeffler, the sliding material E40 or E40-B is used. The basis of the dry lubricant is polytetrafluoroethylene PTFE with embedded chemically non-reactive additives.

The low-wear material has good sliding characteristics (no stick-slip), a low coefficient of friction and high resistance to chemicals. It does not absorb water (it is highly resistant to swelling), does not tend to weld to metal and is also suitable for hydrodynamic operation.

1
Bushes and flanged bushes – material E40

① *Bushes EGB..-E40, EGBZ..-E40, EGB..-E40-B*
② *Flanged bushes EGF..-E40, EGF..-E40-B*

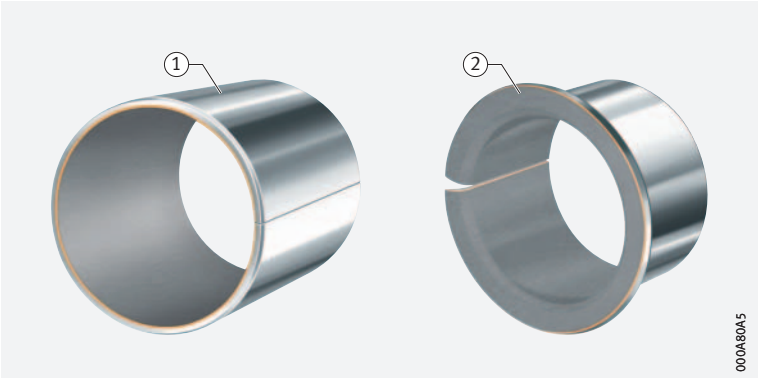

2
Thrust washers and strips – material E40

① *Thrust washers EGW..-E40, EGW..-E40-B*
② *Strips EGS..-E40 EGS..-E40-B (available by agreement)*

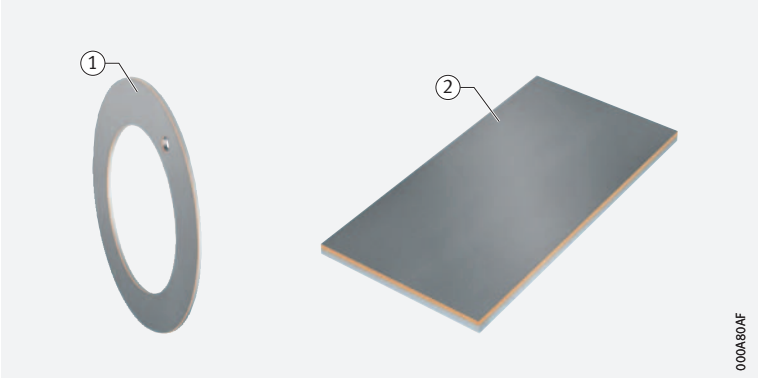

✎ *Areas of application*

Typical areas of application can be found, for example, in fluid technology, in sports gear, in medical or electrical equipment as well as in automotive engineering.

Technical data

The maintenance-free plain bearing materials are available in the variants E40 and E40-B with the following mechanical and physical characteristics ➤ *1776* | ▦ *1*.

1
Characteristics of E40 and E40-B

Characteristic	Load		
Maximum pv value for dry running	Continuous operation	pv	1,8 N/mm² · m/s
	Short periods		3,6 N/mm² · m/s
Permissible specific bearing load	Static	p_{max}	250 N/mm²
	Rotary, oscillating		140 N/mm²
Permissible sliding velocity	Dry running	v_{max}	2,5 m/s
	Hydrodynamic operation		>2,5 m/s
Permissible operating temperature		ϑ	–200 °C to +280 °C
Coefficient of thermal expansion	Steel backing	α_{St}	$11 \cdot 10^{-6}$ K^{-1}
	Bronze backing	α_{Bz}	$17 \cdot 10^{-6}$ K^{-1}
Coefficient of thermal conductivity	Steel backing	λ_{St}	>42 Wm^{-1}K^{-1}
	Bronze backing	λ_{Bz}	>70 Wm^{-1}K^{-1}
Relative electrical resistance after running-in		$R_{rel\ min}$	>1 Ω · cm²

Available designs

Available standard dimension ranges for bushes, washers and strips with E40 material ➤ *1777*| *2*.

2 *Product and size range*

Plain bearings made from material E40	Designation	For shafts with the following dimensions
Bushes	EGB..-E40	3 mm to 300 mm
	EGBZ..-E40	$^{3}/_{16}$ inch to 2 inch
	EGB..-E40-B	4 mm to 100 mm
Flanged bushes	EGF..-E40	6 mm to 40 mm
	EGF..-E40-B	6 mm to 40 mm
Thrust washers	EGW..-E40	10 mm to 62 mm
	EGW..-E40-B	10 mm to 62 mm
Strips	EGS..-E40-S3E	Length 500 mm, width 260 mm, thicknesses from 1,5 mm to 3,06 mm

The plain bearings are not sealed, but can be protected against the ingress of contamination and moisture by the use of external seals.

Plain bearings – material E50, low-maintenance

For low-maintenance metal/polymer composite plain bearings from Schaeffler, the sliding material E50 is used. The basis of the sliding layer is polyoxymethylene POM.

E50 is a low-wear material with good damping characteristics and long relubrication intervals. It can be used for rotary and oscillating motion and is recommended for long-stroke linear motions. E50 is only slightly sensitive to edge loads and is insensitive to shocks.

3 *Bushes – material E50*

① *Bushes EGB..-E50*

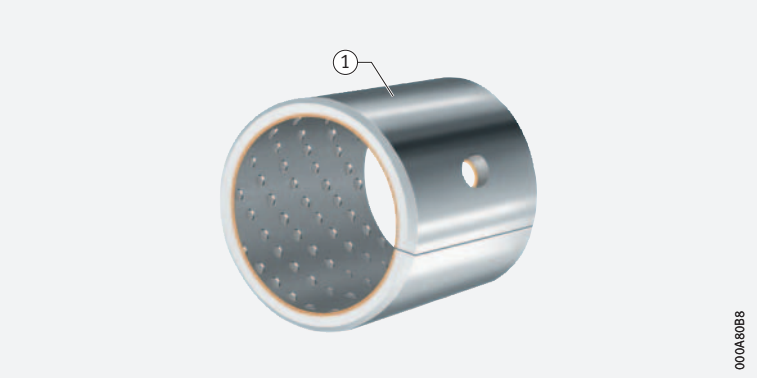

4 *Thrust washers and strips – material E50*

① *Thrust washers EGW..-E50*

② *Strips EGS..-E50*

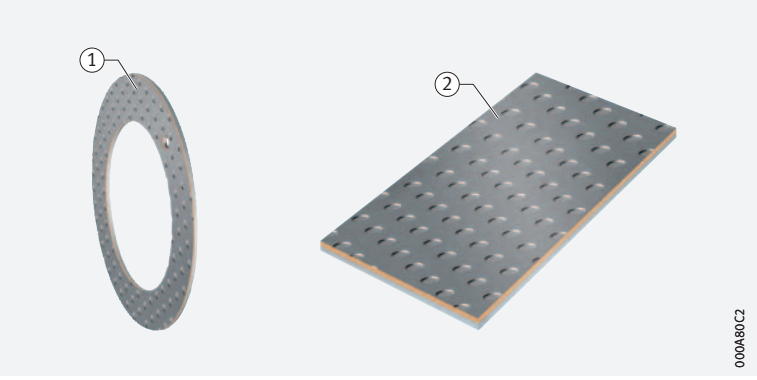

✎ *Areas of application*

Application examples can be found in particular in the area of production machinery, construction and agricultural equipment as well as commercial vehicles.

Technical data

Important mechanical and physical characteristics of the low-maintenance plain bearing material ➤*1778*|▦*3*.

▦*3*
Characteristics of E50

Characteristics	Load		
Maximum pv value		pv	3 N/mm² · m/s
Permissible specific bearing load	Static	p_{max}	140 N/mm²
	Rotary, oscillating		70 N/mm²
Permissible sliding velocity		v_{max}	2,5 m/s
Permissible operating temperature		ϑ	–40 °C to +110 °C
Coefficient of thermal expansion	Steel backing	α_{St}	$11 \cdot 10^{-6}$ K^{-1}
Coefficient of thermal conductivity	Steel backing	λ_{St}	<4 Wm^{-1}K^{-1}
Friction coefficient		μ	0,02 to 0,2

Available designs

Available standard dimension ranges for bushes, washers and strips with E50 material ➤*1778*|▦*4*.

▦*4*
Product and size range

Plain bearings made from material E50	Designation	For shafts with the following dimensions
Bushes	EGB..-E50	8 mm to 100 mm
Thrust washers	EGW..-E50	12 mm to 52 mm
Strips	EGS..-E50	Length up to 500 mm, width from 80 mm to 200 mm, thickness from 0,99 mm to 2,46 mm

Special designs

In addition to the catalogue range of metal/polymer composite plain bearings, there are numerous special designs which are run in either a predominantly rotary direction or a predominantly linear direction. Schaeffler can produce further special designs by agreement.

In addition to the materials named, there are further materials such as the sliding material E60 for film bearings.

For special designs or special materials, please contact the Schaeffler engineering service.

Examples

A small selection of special designs already produced is shown below ➤*1779*|⧉*5* to ➤*1779*|⧉*7*.

Special designs are possible:

- made from any plain bearing material
- with different dimensions from the catalogue products
- as combined components:
  - pressed into rings
  - with plastic moulded parts
- in different shapes:
  - bushes with windows and holes
  - bushes with stamped oil grooves
  - blanked components
  - ball cups
  - bearing shells
- with the sliding layer on the outside
- with different butt joint geometries

✎*Linear plain bearings*

- Linear plain bearings PAB comprising an outer ring with pressed-in plain bearing bushes EGB..-E50. In the design PABO, they have a segment cut out for supported shafts
- Linear plain bearing units PAGH and PAGBA comprising a housing and a pressed-in linear plain bearing PAB or PABO

5
Plain bearings for swivel motion or rotation

① *Pivoting cradle bearing*
② *Plain bush with lubrication groove and recess*

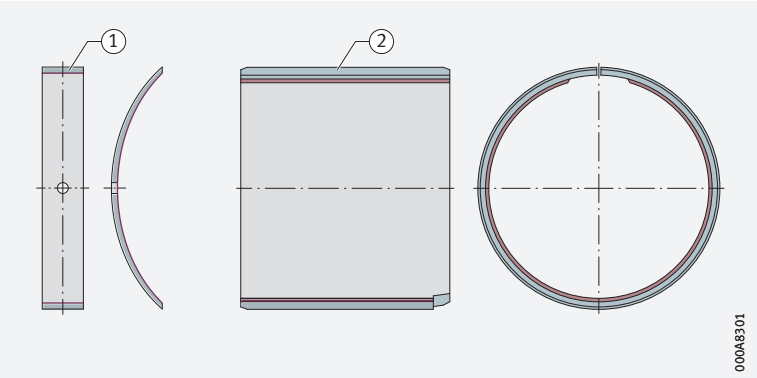

6
Ball cups

① *Maintenance-free*
② *Low-maintenance*

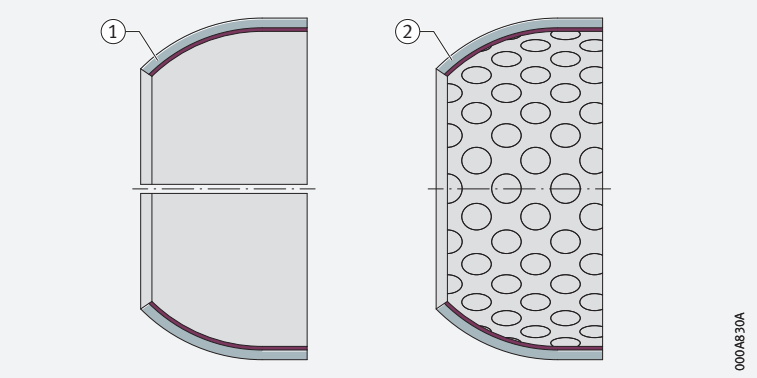

7
Linear plain bearings

① *Linear plain bearing PAB..-PP-AS*
② *Linear plain bearing unit PAGBAO..-PP-AS*

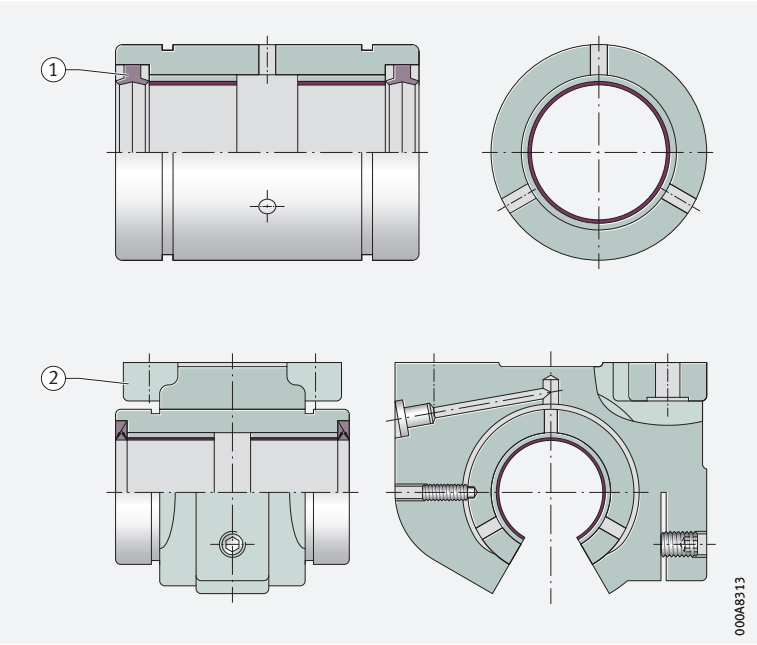

✎ Check feasibility as early as possible

The feasibility of special designs should be checked as early as possible. This applies to the geometry and also to the costs.

Special materials

By agreement, Schaeffler can supply film bearings with the material E60. This maintenance-free special material also conforms to the stated regulations for lead-free plain bearings ➤ *1775*.

✎ *Film bearings E60*

E60 is the plain bearing material from Schaeffler for maintenance-free film bearings. The metal/polymer composite comprises a bronze rib mesh that is filled with a dry lubricant made from polytetrafluoroethylene PTFE with embedded chemically non-reactive additives.

5.2 ELGOTEX filament wound bushes, maintenance-free or water-resistant

✎ *Features*

The maintenance-free wound bushes ZWB made from filament composite material are non-metallic and thus resistant to numerous media.
They have low mass, are resistant to shocks and vibration and have a low coefficient of friction.

In contrast to the standard design of ELGOTEX, ELGOTEX-WA is specially developed for use in water as well as salt water and sea water.

8
Filament wound bushes, open

① *ELGOTEX filament wound bush, open ZWB*
② *ELGOTEX-WA filament wound bush, open ZWB..-WA*



9
Filament wound bushes, sealed

① *ELGOTEX filament wound bush, sealed ZWB-..-2RS*
② *ELGOTEX-WA filament wound bush, sealed ZWB-..-2RS-WA*



Further information:
- Catalogue Plain Bearings HG 1
- Plain bearings with ELGOTEX TPI 194
- Product selection and information system ***medias*** *professional https://medias.schaeffler.com*
- Download and ordering via *https://www.schaeffler.de/std/1D64*

Maintenance-free plain bearing material

The radial dry plain bearings have a twin layer structure ➤ *1781* | *10*:
- The outer layer (the backing) ensures the strength of the bush. It comprises continuous glass fibres that are additionally stabilised by means of a specific winding angle, giving an increase in strength. The fibres are bound in epoxy resin
- The inner layer (sliding layer) contains a polymer/PTFE yarn that is embedded together with fillers and solid lubricants in a resin matrix

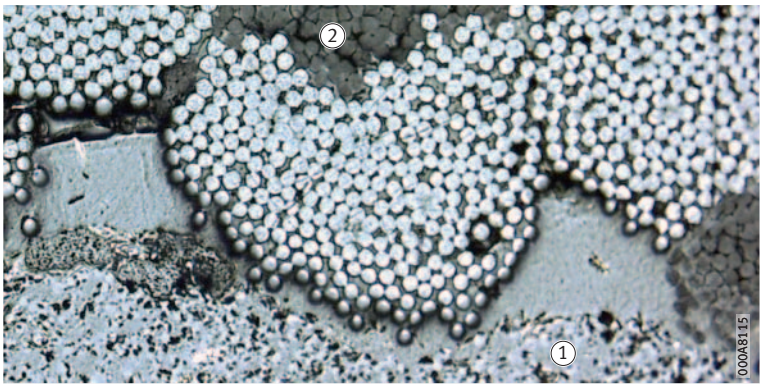

10 *Microsection of an ELGOTEX filament wound bush*

① *Backing*
② *Sliding layer*

Water-resistant design ELGOTEX-WA

The specific characteristic of ELGOTEX-WA lies in the specific matching of fibre and matrix to the particular operating conditions. The inner sliding layer contains a polymer/PTFE sliding yarn that is embedded together with fillers and solid lubricants in a resin matrix. It is hydrophobic and dimensionally stable. The backing, which is reinforced by means of glass fibre, ensures the necessary strength of the bush. The thickness of the sliding layer and backing layer is specifically designed in accordance with the requirements of the application and thus of the wear limit.

Areas of application

✎ *ELGOTEX* ELGOTEX filament wound bushes are particularly suitable for use in construction machinery, conveying equipment, transportation vehicles, hydraulic applications and solar energy plant. They are also suitable as an environmentally-friendly and maintenance-free bearing type for replacing lubricated solid-section plain bearings.

✎ *ELGOTEX-WA* ELGOTEX-WA is used in shipbuilding, marine engineering, hydromechanical steel structures, water power generation as well as in turbines and waste water treatment.

Dimension range

Available standard dimension ranges ➤*1781*| ▦ *5*. ELGOTEX filament wound bushes are available by agreement with integrated lip seals, on one side in design LS or on both sides in design 2RS. ELGOTEX-WA filament wound bushes have the suffix WA. ELGOTEX filament wound bushes with special dimensions up to an outside diameter D_0 = 1 200 mm, special tolerance classes or in the form of segment bearings, are possible and may be available by agreement from Schaeffler.

▦ **5** *Dimension range*

ELGOTEX filament wound bush	Dimensions mm	
	from	to
Inside diameter	20	200
Outside diameter	24	220
Width	15	250

Technical data for ELGOTEX

Maintenance-free ELGOTEX filament wound bushes have the following mechanical and physical characteristics ➤*1782*| ▦ *6*.

In underwater use, there is a considerable reduction in the rating life. In this case, the coefficient of friction may increase significantly. In the production of ELGOTEX filament wound bushes, defects (pores) and fraying may occur in the PTFE due to the production process. These cannot be prevented by technological measures and do not represent any impairment of the function.

6 *Characteristics of ELGOTEX*

Characteristics +++ = very good + = adequate	Load		
Maximum pv value[1]		pv	2,8 N/mm² · m/s
Permissible specific bearing load[2]	Static	p_{max}	200 N/mm²
	Rotary, oscillating		140 N/mm²
Permissible sliding velocity		v_{max}	0,18 m/s
Permissible operating temperature		ϑ	–20 °C to +130 °C
Friction coefficient		μ	0,03 to 0,2
Operating life behaviour with:			
Dry running			+++
Grease and oil lubrication			+
Media lubrication, water lubrication			+

1) *Bearing load as a function of velocity ➤ 1782|11.*

2) *For static loads ≧ 180 N/mm², the design of ELGOTEX filament wound bushes must be checked by the Schaeffler engineering service. For values at or above this load range, we alternatively recommend ELGOGLIDE plain bushes ➤ 1782|5.3.*

11 *pv diagram*

p = *specific bearing load*
v = *sliding velocity*

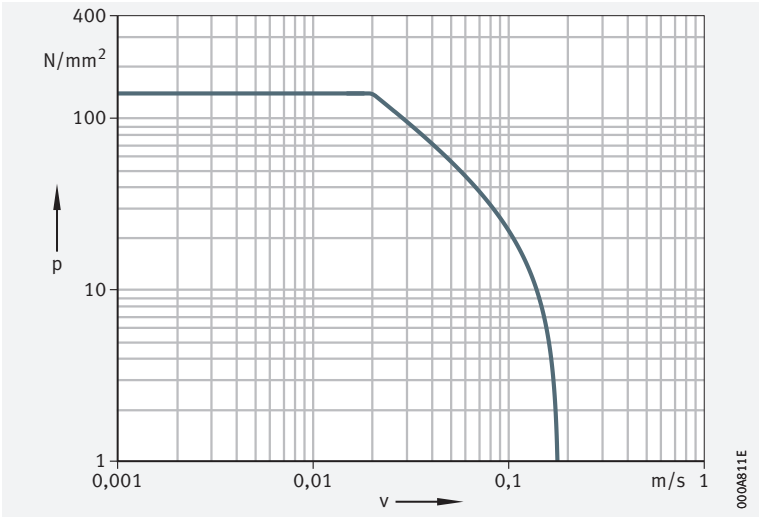

5.3 ELGOGLIDE plain bushes, maintenance-free

Features

Maintenance-free ELGOGLIDE plain bushes ZGB are radial dry plain bearings and comprise a cylindrical steel backing with a sliding layer with very long life and low friction made from ELGOGLIDE.

They can support very high radial loads with unilateral load direction and high static loads. In addition, they are highly suitable for high alternating loads and swivel motions.

12 *ELGOGLIDE plain bushes, maintenance-free*

① *ELGOGLIDE plain bush, with steel backing, open ZGB*
② *ELGOGLIDE plain bush, with steel backing, with seal lips ZGB..-2RS*

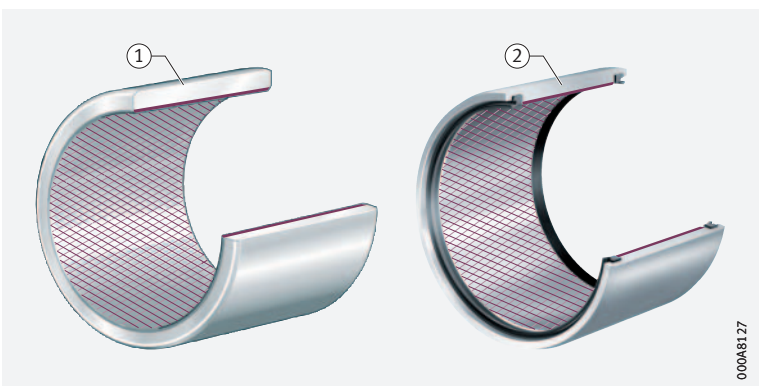

Further information:
- Catalogue Plain Bearings HG 1
- Product selection and information system ***medias*** *professional* *https://medias.schaeffler.com*
- Download and ordering via *https://www.schaeffler.de/std/1D64*

Maintenance-free plain bearing material

The sliding layer comprises a 0,5 mm thick layer of ELGOGLIDE, is embedded in synthetic resin and is attached by a high strength bond to the support body. The flow behaviour of the sliding layer can be, in conjunction with the supporting body, almost negligible even under very high load. The adhesive bond is resistant to moisture and swelling.

✎ *ELGOGLIDE designs*

For differing requirements, the following are available:
- ELGOGLIDE
  the standard material for very high dynamic contact pressures from 25 N/mm^2 to 300 N/mm^2 and a long operating life
- ELGOGLIDE-W11
  the material for dynamic contact pressures from 1 N/mm^2 to 150 N/mm^2 and with low coefficients of friction even at low contact pressures

Areas of application

ELGOGLIDE plain bushes can support higher forces than conventional plain bushes and can therefore be used to replace steel, bronze and plastic plain bearings.

Typical areas of application include construction and agricultural machinery as well as conveying equipment, civil engineering and shipbuilding.

Available designs

Available standard dimension ranges ➤*1783*|▦ *7*. ELGOGLIDE filament wound bushes are available by agreement with integrated lip seals, on one side in design RS or on both sides in design 2RS.

ELGOGLIDE plain bushes with special dimensions or special tolerance classes are possible and may be available by agreement with Schaeffler.

▦ *7*
Dimension range

ELGOGLIDE plain bush	Dimensions mm	
	from	to
Inside diameter	30	200
Outside diameter	36	220
Width	30	180

Suffixes

Suffixes for available designs ➤*1783*|▦ *8*.

▦ *8*
Available designs

Suffix	Description	Design
W1	Support body made from corrosion-resistant steel	Special design, available by agreement
W11	By agreement, for low contact pressures (starting as low as 1 N/mm^2) and minimal friction	
2RS	Standard lip seal on both sides	
RS	Standard lip seal on one side	

5.4 Plain bearings for diverse requirements

The table gives a compilation of the design features of plain bushes.

9 *Composite plain bearings with plain bushes*

Plain bearings			Metal/polymer composite plain bearings
■ Standard design ❑ Optional ✓ Suitable – Not suitable/not applicable			E40, E40-B 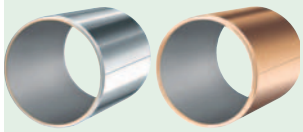
detailed information ➤			1775
Type of maintenance			
Maintenance-free			✓
Low-maintenance			–
Water-resistant			❑
Technical data			
Permissible specific bearing load	Static	N/mm^2	250
	Dynamic	N/mm^2	140
Permissible sliding velocity		m/s	2,5
Maximum permissible pv value in continuous operation		$N/mm^2 \cdot m/s$	1,8
Permissible operating temperature[4]		°C	–200 to +280
Friction coefficient			0,03 to 0,25
Lubrication			
Dry running			✓
Grease and oil lubrication			–
Hydrodynamic operation			✓
Media lubrication			✓
Possible application			
Increased corrosion resistance			E40-B ■ E40 ❑
Use in water			E40-B ❑
Integrated sealing possible			–
Standard designs			EGB, EGF, EGW, EGS 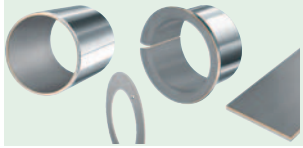

1) *For static loads of more than 180 N/mm^2, the design of ELGOTEX filament wound bushes must be checked by the Schaeffler engineering service.*

2) *Standard bushes have a static load carrying capacity of 300 N/mm^2. If a material of higher strength is used for the steel support body, this value can be increased to 500 N/mm^2.*

3) *Certified specific bearing load p_{max} = 15 N/mm^2 for use in rudder carrier bearings in accordance with MCM-0112 (Germanischer Lloyd).*

4) *Valid for open design (without seals).*

	Filament wound bushes		Plain bushes
E50	ELGOTEX	ELGOTEX-WA	ELGOGLIDE
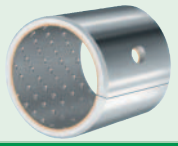	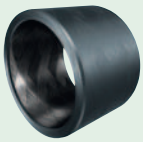		
1777	**1780**	**1781**	**1782**
–	✓	–	✓
✓	–	–	–
–	–	✓	–
140	200[1)]	150	500[2)]
70	140	50[3)]	300
2,5	0,18	0,024	0,3
3	2,8	1,2	7
–40 to +110	–20 to +130	–20 to +130	–50 to +150
0,02 to 0,2	0,03 to 0,2	0,05 to 0,15	0,02 to 0,2
–	✓	✓	✓
✓	✓	✓	–
–	–	–	–
–	✓	✓	–
❑	■	■	❑
–	❑	■	–
–	❑	❑	❑
EGB, EGW, EGS	ZWB	ZWB..-WA	ZGB
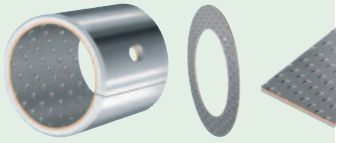	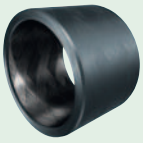		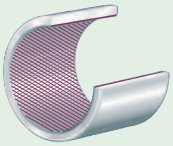

Product index

Series	Description	Page
10	Self-aligning ball bearings with cylindrical bore	*390*
112	Self-aligning ball bearings with extended inner ring	*404*
12	Self-aligning ball bearings with cylindrical bore	*390*
12..-K	Self-aligning ball bearings with tapered bore, taper 1:12	*390*
13	Self-aligning ball bearings with cylindrical bore	*390*
13..-K	Self-aligning ball bearings with tapered bore, taper 1:12	*392*
160	Deep groove ball bearings	*242*
2..-KRR	Deep groove ball bearings with extended inner ring (radial insert ball bearings), cylindrical outer ring and R type seal	*1526*
2..-NPP-B	Self-aligning deep groove ball bearings (radial insert ball bearings), spherical outer ring and P type seal	*1524*
202	Barrel roller bearings with cylindrical bore	*666*
202..-K	Barrel roller bearings with tapered bore, taper 1:12	*666*
203	Barrel roller bearings with cylindrical bore	*666*
203..-K	Barrel roller bearings with tapered bore, taper 1:12	*666*
213..-E1	Spherical roller bearings with cylindrical bore	*710*
213..-E1-K	Spherical roller bearings with tapered bore, taper 1:12	*710*
22	Self-aligning ball bearings with cylindrical bore	*390*
22..-2RS	Self-aligning ball bearings with cylindrical bore, contact seal on both sides	*390*
22..-K	Self-aligning ball bearings with tapered bore, taper 1:12	*392*
22..-K-2RS	Self-aligning ball bearings with tapered bore, taper 1:12, contact seal on both sides	*392*
222..-2RSR	Spherical roller bearings with cylindrical bore, lip seal on both sides	*770*
222..-K-2RSR	Spherical roller bearings with tapered bore, taper 1:12, lip seal on both sides	*770*

Series	Description	Page
222..-BEA	Spherical roller bearings with cylindrical bore	*740*
222..-BEA-K	Spherical roller bearings with tapered bore, taper 1:12	*740*
222..-E1	Spherical roller bearings with cylindrical bore	*710*
222..-E1-K	Spherical roller bearings with tapered bore, taper 1:12	*710*
223..-BEA	Spherical roller bearings with cylindrical bore	*740*
223..-BEA-K	Spherical roller bearings with tapered bore, taper 1:12	*740*
223..-E1	Spherical roller bearings with cylindrical bore	*710*
223..-E1-K	Spherical roller bearings with tapered bore, taper 1:12	*710*
223..-E1-K-T41A	Spherical roller bearings, for oscillating load with restricted diameter tolerances, with tapered bore	*812*
223..-E1-T41A	Spherical roller bearings, for oscillating load with restricted diameter tolerances, with cylindrical bore	*812*
23	Self-aligning ball bearings with cylindrical bore	*390*
23..-2RS	Self-aligning ball bearings with cylindrical bore, contact seal on both sides	*390*
23..-K	Self-aligning ball bearings with tapered bore, taper 1:12	*392*
230	Spherical roller bearings with cylindrical bore	*764*
230..-BEA	Spherical roller bearings with cylindrical bore	*756*
230..-BEA-K	Spherical roller bearings with tapered bore, taper 1:12	*756*
230..-E1	Spherical roller bearings with cylindrical bore	*718*
230..-E1A	Spherical roller bearings with cylindrical bore	*718*
230..-E1A-K	Spherical roller bearings with tapered bore, taper 1:12	*718*
230..-E1-K	Spherical roller bearings with tapered bore, taper 1:12	*718*
230..-K	Spherical roller bearings with tapered bore, taper 1:12	*766*
231	Spherical roller bearings with cylindrical bore	*764*
231..-2RSR	Spherical roller bearings with cylindrical bore, lip seal on both sides	*772*
231..-K-2RSR	Spherical roller bearings with tapered bore, taper 1:12, lip seal on both sides	*772*
231..-BEA	Spherical roller bearings with cylindrical bore	*754*
231..-BEA-K	Spherical roller bearings with tapered bore, taper 1:12	*754*
231..-E1	Spherical roller bearings with cylindrical bore	*716*
231..-E1A	Spherical roller bearings with cylindrical bore	*716*
231..-E1A-K	Spherical roller bearings with tapered bore, taper 1:12	*716*
231..-E1-K	Spherical roller bearings with tapered bore, taper 1:12	*716*
231..-K	Spherical roller bearings with tapered bore, taper 1:12	*764*
232..-BEA	Spherical roller bearings with cylindrical bore	*752*
232..-BEA-K	Spherical roller bearings with tapered bore, taper 1:12	*752*
232..-E1	Spherical roller bearings with cylindrical bore	*714*
232..-E1A	Spherical roller bearings with cylindrical bore	*714*
232..-E1A-K	Spherical roller bearings with tapered bore, taper 1:12	*714*
232..-E1-K	Spherical roller bearings with tapered bore, taper 1:12	*714*
233..-A-MA-T41A	Spherical roller bearings, for oscillating load with restricted diameter tolerances, with cylindrical bore	*812*
233..-BEA-MA1-T41A	Spherical roller bearings, for oscillating load with restricted diameter tolerances, with cylindrical bore	*814*
2344	Super precision axial angular contact ball bearings, double direction	*1242*
238	Spherical roller bearings with cylindrical bore	*754*
238..-K	Spherical roller bearings with tapered bore, taper 1:12	*754*
239	Spherical roller bearings with cylindrical bore	*732*
239..-K	Spherical roller bearings with tapered bore, taper 1:12	*732*
240..-BE	Spherical roller bearings with cylindrical bore	*720*
240..-BE-2VSR	Spherical roller bearings with cylindrical bore, lip seal on both sides	*770*
240..-BEA	Spherical roller bearings with cylindrical bore	*742*
240..-BEA-K30	Spherical roller bearings with tapered bore, taper 1:30	*742*
240..-BE-K30	Spherical roller bearings with tapered bore, taper 1:30	*720*
241	Spherical roller bearings with cylindrical bore	*758*
241..-BE	Spherical roller bearings with cylindrical bore	*718*

Series	Description	Page
241..-BE-2VSR	Spherical roller bearings with cylindrical bore, lip seal on both sides	*770*
241..-BEA	Spherical roller bearings with cylindrical bore	*750*
241..-BEA-K30	Spherical roller bearings with tapered bore, taper 1:30	*750*
241..-BE-K30	Spherical roller bearings with tapered bore, taper 1:30	*718*
241..-K30	Spherical roller bearings with tapered bore, taper 1:30	*758*
248	Spherical roller bearings with cylindrical bore	*750*
249	Spherical roller bearings with cylindrical bore	*756*
249..-K30	Spherical roller bearings with tapered bore, taper 1:30	*756*
292..-E1	Axial spherical roller bearings, single direction	*1098*
293..-E1	Axial spherical roller bearings, single direction	*1098*
294..-E1	Axial spherical roller bearings, single direction	*1098*
30..-B	Angular contact ball bearings, double row, contact angle $\alpha = 25°$	*334*
30..-B-2RS	Angular contact ball bearings, double row, lip seal on both sides, contact angle $\alpha = 25°$	*334*
30..-B-2RSR	Angular contact ball bearings, double row, lip seal on both sides, contact angle $\alpha = 25°$	*334*
30..-B-2RZ	Angular contact ball bearings, double row, non-contact radial seal on both sides, contact angle $\alpha = 25°$	*334*
30..-B-2Z	Angular contact ball bearings, double row, sheet metal gap seal on both sides, contact angle $\alpha = 25°$	*334*
302	Tapered roller bearings, single row to DIN/ISO	*596*
302..-DF	Two tapered roller bearings, single row to DIN/ISO, matched in pairs in an X arrangement	*644*
303	Tapered roller bearings, single row to DIN/ISO	*596*
313	Tapered roller bearings, single row to DIN/ISO	*596*
313..-DF	Two tapered roller bearings, single row to DIN/ISO, matched in pairs in an X arrangement	*644*
32	Angular contact ball bearings, double row, with filling slots, contact angle $\alpha = 35°$	*346*
32..-B	Angular contact ball bearings, double row, contact angle $\alpha = 25°$	*334*
32..-B-2RS	Angular contact ball bearings, double row, contact seal on both sides, axial contact, contact angle $\alpha = 25°$	*334*
32..-B-2RSR	Angular contact ball bearings, double row, lip seal on both sides, contact angle $\alpha = 25°$	*346*
32..-B-2Z	Angular contact ball bearings, double row, sheet metal gap seal on both sides, contact angle $\alpha = 25°$	*334*
32..-BD	Angular contact ball bearings, double row, contact angle $\alpha = 30°$	*336*
32..-BD-2HRS	Angular contact ball bearings, double row, lip seal on both sides, contact angle $\alpha = 30°$	*336*
32..-BD-2Z	Angular contact ball bearings, double row, sheet metal gap seal on both sides, contact angle $\alpha = 30°$	*336*
320	Tapered roller bearings, single row to DIN/ISO	*596*
320..-DF	Two tapered roller bearings, single row to DIN/ISO, matched in pairs in an X arrangement	*644*
322	Tapered roller bearings, single row to DIN/ISO	*596*
322..-DF	Two tapered roller bearings, single row to DIN/ISO, matched in pairs in an X arrangement	*644*
323	Tapered roller bearings, single row to DIN/ISO	*596*
329	Tapered roller bearings, single row to DIN/ISO	*596*
33	Angular contact ball bearings, double row, with filling slots, contact angle $\alpha = 35°$	*346*
33..-B	Angular contact ball bearings, double row, contact angle $\alpha = 25°$	*334*
33..-B-2RS	Angular contact ball bearings, double row, lip seal on both sides, contact angle $\alpha = 25°$	*334*

Series	Description	Page
33..-B-2RSR	Angular contact ball bearings, double row, lip seal on both sides, contact angle $\alpha = 25°$	*344*
33..-B-2Z	Angular contact ball bearings, double row, sheet metal gap seal on both sides, contact angle $\alpha = 25°$	*334*
33..-BD	Angular contact ball bearings, double row, contact angle $\alpha = 30°$	*336*
33..-BD-2HRS	Angular contact ball bearings, double row, lip seal on both sides, contact angle $\alpha = 30°$	*336*
33..-BD-2Z	Angular contact ball bearings, double row, sheet metal gap seal on both sides, contact angle $\alpha = 30°$	*336*
33..-DA	Angular contact ball bearings, double row, separable, with split inner ring, contact angle $\alpha = 45°$	*338*
330	Tapered roller bearings, single row to DIN/ISO	*596*
330..-DF	Two tapered roller bearings, single row to DIN/ISO, matched in pairs in X arrangement	*644*
331	Tapered roller bearings, single row to DIN/ISO	*600*
332	Tapered roller bearings, single row to DIN/ISO	*596*
38..-B	Angular contact ball bearings, double row, contact angle $\alpha = 25°$	*334*
38..-B-2RS	Angular contact ball bearings, double row, lip seal on both sides, contact angle $\alpha = 25°$	*334*
38..-B-2RZ	Angular contact ball bearings, double row, non-contact radial seal on both sides, contact angle $\alpha = 25°$	*334*
42	Deep groove ball bearings, double row	*280*
43	Deep groove ball bearings, double row	*280*
511	Axial deep groove ball bearings, single direction	*1018*
512	Axial deep groove ball bearings, single direction	*1018*
513	Axial deep groove ball bearings, single direction	*1018*
514	Axial deep groove ball bearings, single direction	*1018*
522	Axial deep groove ball bearings, double direction	*1030*
523	Axial deep groove ball bearings, double direction	*1030*
524	Axial deep groove ball bearings, double direction	*1030*
532	Axial deep groove ball bearings, single direction, with spherical housing locating washer	*1018*
533	Axial deep groove ball bearings, single direction, with spherical housing locating washer	*1018*
542	Axial deep groove ball bearings, double direction, with spherical housing locating washer	*1030*
543	Axial deep groove ball bearings, double direction, with spherical housing locating washer	*1030*
60	Deep groove ball bearings	*244*
60..-2RSR	Deep groove ball bearings, lip seal on both sides	*244*
60..-2Z	Deep groove ball bearings, sheet metal gap seal on both sides	*236*
60..-C	Deep groove ball bearings, modified internal construction (Generation C)	*238*
60..-C-2HRS	Deep groove ball bearings, modified internal construction (Generation C), lip seal on both sides	*238*
60..-C-2Z	Deep groove ball bearings, modified internal construction (Generation C), sheet metal gap seal on both sides	*238*
618	Deep groove ball bearings	*238*
618..-2RSR	Deep groove ball bearings, lip seal on both sides	*238*
618..-2RZ	Deep groove ball bearings, non-contact radial seal on both sides	*256*
618..-2Z	Deep groove ball bearings, sheet metal gap seal on both sides	*238*
619	Deep groove ball bearings	*238*
619..-2RSR	Deep groove ball bearings, lip seal on both sides	*238*
619..-2RZ	Deep groove ball bearings, non-contact radial seal on both sides	*256*

Series	Description	Page
619..-2Z	Deep groove ball bearings, sheet metal gap seal on both sides	238
62	Deep groove ball bearings	262
62..-2RSR	Deep groove ball bearings, lip seal on both sides	262
62..-2Z	Deep groove ball bearings, sheet metal gap seal on both sides	236
62..-C	Deep groove ball bearings, modified internal construction (Generation C)	236
62..-C-2HRS	Deep groove ball bearings, modified internal construction (Generation C), lip seal on both sides	236
62..-C-2Z	Deep groove ball bearings, modified internal construction (Generation C), sheet metal gap seal on both sides	236
622..-2RSR	Deep groove ball bearings, lip seal on both sides	238
623..-2RSR	Deep groove ball bearings, lip seal on both sides	238
63	Deep groove ball bearings	238
63..-2RSR	Deep groove ball bearings, lip seal on both sides	238
63..-2Z	Deep groove ball bearings, sheet metal gap seal on both sides	236
63..-C	Deep groove ball bearings, modified internal construction (Generation C)	240
63..-C-2HRS	Deep groove ball bearings, modified internal construction (Generation C), lip seal on both sides	240
63..-C-2Z	Deep groove ball bearings, modified internal construction (Generation C), sheet metal gap seal on both sides	240
64	Deep groove ball bearings	244
64..-C	Deep groove ball bearings, modified internal construction (Generation C)	254
68..-2Z	Deep groove ball bearings, sheet metal gap seal on both sides	236
69..-2Z	Deep groove ball bearings, sheet metal gap seal on both sides	236
70..-B	Angular contact ball bearings, single row, contact angle $\alpha = 40°$	308
70..-B-2RS	Angular contact ball bearings, single row, contact angle $\alpha = 40°$, lip seal on both sides	308
718..-B	Angular contact ball bearings, single row, contact angle $\alpha = 40°$	310
72..-B	Angular contact ball bearings, single row, contact angle $\alpha = 40°$	308
72..-B-2RS	Angular contact ball bearings, single row, contact angle $\alpha = 40°$, lip seal on both sides	308
73..-B	Angular contact ball bearings, single row, contact angle $\alpha = 40°$	308
73..-B-2RS	Angular contact ball bearings, single row, contact angle $\alpha = 40°$, lip seal on both sides	308
74..-B	Angular contact ball bearings, single row, contact angle $\alpha = 40°$	310
7602	Axial angular contact ball bearings, single direction, contact angle $\alpha = 60°$, restricted tolerances	1280
7602..-2RS	Axial angular contact ball bearings, single direction, contact angle $\alpha = 60°$, restricted tolerances, lip seal on both sides	1294
7603	Axial angular contact ball bearings, single direction, contact angle $\alpha = 60°$, restricted tolerances	1282
7603..-2RS	Axial angular contact ball bearings, single direction, contact angle $\alpha = 60°$, restricted tolerances, lip seal on both sides	1294
811	Axial cylindrical roller bearings, single direction, comprising K811, GS, WS	1054
812	Axial cylindrical roller bearings, single direction, comprising K812, GS, WS	1054
893	Axial cylindrical roller bearings, single direction, comprising K893, GS, WS	1054

Series	Description	Page
894	Axial cylindrical roller bearings, single direction, comprising K894, GS, WS	*1054*
AH(X)23	Withdrawal sleeves, taper 1:12	*1702*
AH(X)3	Withdrawal sleeves, taper 1:12	*1702*
AH(X)30	Withdrawal sleeves, taper 1:12	*1704*
AH(X)31	Withdrawal sleeves, taper 1:12	*1703*
AH(X)32	Withdrawal sleeves, taper 1:12	*1703*
AH2	Withdrawal sleeves, taper 1:12	*1702*
AH22	Withdrawal sleeves, taper 1:12	*1708*
AH240	Withdrawal sleeves, taper 1:30	*1704*
AH241	Withdrawal sleeves, taper 1:30	*1704*
AH33	Withdrawal sleeves, taper 1:12	*1702*
AH39	Withdrawal sleeves, taper 1:12	*1708*
AM	Precision locknuts, segments for clamping	*1332*
AMS	Sockets for precision locknuts AM	*1335*
AS	Axial bearing washers, suitable for AXK and AXW	*1077*
AXK	Axial needle roller and cage assemblies	*1077*
AXW	Axial needle roller bearings with centring spigot, single direction	*1078*
AY..-NPP-B	Radial insert ball bearings, spherical outer ring, grub screws in inner ring and P type seal	*1508*
B70..-C	Super precision angular contact ball bearings, contact angle α = 15°, restricted tolerances	*1146*
B70..-E	Super precision angular contact ball bearings, contact angle α = 25°, restricted tolerances	*1146*
B719..-C	Super precision angular contact ball bearings, contact angle α = 15°, restricted tolerances	*1146*
B719..-E	Super precision angular contact ball bearings, contact angle α = 25°, restricted tolerances	*1146*
B72..-C	Super precision angular contact ball bearings, contact angle α = 15°, restricted tolerances	*1146*
B72..-E	Super precision angular contact ball bearings, contact angle α = 25°, restricted tolerances	*1146*
BAX	Super precision angular contact ball bearings	*1244*
BE	Radial insert ball bearings, cylindrical outer ring, with steel aligning ring and P type seal	*1536*
BK	Drawn cup needle roller bearings with closed end	*866*
BK..-RS	Drawn cup needle roller bearings with closed end, sealed on one side	*873*
BSB	Axial angular contact ball bearings, single direction, contact angle α = 60°, restricted tolerances	*1286*
BSB..-2Z-SU	Axial angular contact ball bearings, single direction, contact angle α = 60°, restricted tolerances, gap seal on both sides, greased	*1294*
BSB..-SU	Axial angular contact ball bearings, single direction, contact angle α = 60°, restricted tolerances	*1280*
BSB..-SU-L055	Axial angular contact ball bearings, single direction, contact angle α = 60°, restricted tolerances, greased	*1280*
CRB	Radial insert ball bearings, with rubber interliner, eccentric locking collar and P type seal	*1534*
DKLFA..-2RS	Triple row angular contact ball bearings with flange, with fixing holes, lip seal on both sides	*1306*
DRS	Seal carrier assemblies, for ZARF, ZARF..-L, with integral rotary shaft seal	*1330*
E..-KLL	Radial insert ball bearings, cylindrical outer ring, eccentric locking collar and L type seal	*1504*
E..-KRR	Radial insert ball bearings, cylindrical outer ring, eccentric locking collar and R type seal	*1504*
E..-KRR-B	Radial insert ball bearings, spherical outer ring, eccentric locking collar and R type seal	*1496*
G	Sealing rings, NBR elastomer, single lip	*1002*
G..-KRR-B-AS2/V	Radial insert ball bearings, spherical outer ring, eccentric locking collar and R type seal, inch size bore, relubrication facility	*1512*

Series	Description	Page
GAY..-NPP-B	Radial insert ball bearings, spherical outer ring, grub screws in inner ring and P type seal, inch size bore	*1508*
GAY..-NPP-B-AS2/V	Radial insert ball bearings, spherical outer ring, grub screws in inner ring and P type seal, inch size bore	*1512*
GAY..-NPP-B-FA164	Radial insert ball bearings, spherical outer ring, grub screws in inner ring and P type seal, for high temperatures, relubrication facility	*1508*
GE..-KLL-B	Radial insert ball bearings, spherical outer ring, eccentric locking collar and L type seal, relubrication facility	*1496*
GE..-KRR-B	Radial insert ball bearings, spherical outer ring, eccentric locking collar and R type seal, relubrication facility	*1496*
GE..-KRR-B-2C	Radial insert ball bearings, spherical outer ring, eccentric locking collar and R type seal, flinger shields, relubrication facility	*1496*
GE..-KRR-B-FA101	Radial insert ball bearings, spherical outer ring, eccentric locking collar and R type seal, for high and low temperatures, relubrication facility	*1496*
GE..-KRR-B-FA125	Radial insert ball bearings, spherical outer ring, eccentric locking collar and R type seal, Corrotect, relubrication facility	*1544*
GE..-KRR-B-FA164	Radial insert ball bearings, spherical outer ring, eccentric locking collar and R type seal, for high temperatures, relubrication facility	*1496*
GE..-KTT-B	Radial insert ball bearings, spherical outer ring, eccentric locking collar and T type seal, relubrication facility	*1496*
GLE..-KRR-B	Radial insert ball bearings, spherical outer ring, drive slot in inner ring and R type seal, relubrication facility	*1522*
GNE..-KRR-B	Radial insert ball bearings, spherical outer ring, eccentric locking collar and R type seal, heavy series, relubrication facility	*1498*
GR	Sealing rings, NBR elastomer, single lip, external steel reinforcement	*1002*
GRA..-NPP-B-AS2/V	Radial insert ball bearings, spherical outer ring, eccentric locking collar and P type seal, inch size bore, relubrication facility	*1512*
GRAE..-NPP-B	Radial insert ball bearings, spherical outer ring, eccentric locking collar and P type seal, relubrication facility	*1496*
GRAE..-NPP-B-FA125	Radial insert ball bearings, spherical outer ring, eccentric locking collar and P type seal, Corrotect, relubrication facility	*1544*
GS811	Housing locating washers	*1055*
GS812	Housing locating washers	*1055*
GS893	Housing locating washers	*1055*
GS894	Housing locating washers	*1055*
GSH..-2RSR-B	Radial insert ball bearings, spherical outer ring, adapter sleeve and RSR type seal, relubrication facility	*1520*
GVK..-KTT-B	Self-aligning deep groove ball bearings, spherical outer ring, square bore and T type seal, relubrication facility	*1528*
GVKE..-KRR-B	Self-aligning deep groove ball bearings, spherical outer ring, square bore and R type seal	*1528*
GY..-KRR-B-AS2/V	Radial insert ball bearings, spherical outer ring, grub screws in inner ring and R type seal, inch size bore, relubrication facility	*1512*
GYE..-KRR-B	Radial insert ball bearings, spherical outer ring, grub screws in inner ring and R type seal, relubrication facility	*1508*
H2	Adapter sleeves, with locknut and retainer, taper 1:12	*1688*
H23	Adapter sleeves, with locknut and retainer, taper 1:12	*1688*
H240	Adapter sleeves, with locknut and retainer, taper 1:30	*1689*
H241	Adapter sleeves, with locknut and retainer, taper 1:30	*1689*

Series	Description	Page
H3	Adapter sleeves, with locknut and retainer, taper 1:12	*1688*
H30	Adapter sleeves, with locknut and retainer, taper 1:12	*1690*
H31	Adapter sleeves, with locknut and retainer, taper 1:12	*1689*
H32	Adapter sleeves, with locknut and retainer, taper 1:12	*1695*
H33	Adapter sleeves, with locknut and retainer, taper 1:12	*1688*
H39	Adapter sleeves, with locknut and retainer, taper 1:12	*1692*
HC70..-E	Super precision angular contact ball bearings, contact angle α = 25°, with ceramic balls, restricted tolerances	*1146*
HC70..-EDLR	Super precision angular contact ball bearings, contact angle α = 25°, with ceramic balls, restricted tolerances, in Direct Lube design	*1210*
HC719..-E	Super precision angular contact ball bearings, contact angle α = 25°, with ceramic balls, restricted tolerances	*1146*
HC719..-EDLR	Super precision angular contact ball bearings, contact angle α = 25°, with ceramic balls, restricted tolerances, in Direct Lube design	*1210*
HCB70..-C	Super precision angular contact ball bearings, contact angle α = 15°, with ceramic balls, restricted tolerances	*1146*
HCB70..-CDLR	Super precision angular contact ball bearings, contact angle α = 15°, with ceramic balls, restricted tolerances, in Direct Lube design	*1210*
HCB70..-E	Super precision angular contact ball bearings, contact angle α = 25°, with ceramic balls, restricted tolerances	*1146*
HCB70..-EDLR	Super precision angular contact ball bearings, contact angle α = 25°, with ceramic balls, restricted tolerances, in Direct Lube design	*1210*
HCB719..-C	Super precision angular contact ball bearings, contact angle α = 15°, with ceramic balls, restricted tolerances	*1146*
HCB719..-CDLR	Super precision angular contact ball bearings, contact angle α = 15°, with ceramic balls, restricted tolerances, in Direct Lube design	*1210*
HCB719..-E	Super precision angular contact ball bearings, contact angle α = 25°, with ceramic balls, restricted tolerances	*1146*
HCB719..-EDLR	Super precision angular contact ball bearings, contact angle α = 25°, with ceramic balls, restricted tolerances, in Direct Lube design	*1210*
HCB72..-C	Super precision angular contact ball bearings, contact angle α = 15°, with ceramic balls, restricted tolerances	*1146*
HCB72..-E	Super precision angular contact ball bearings, contact angle α = 25°, with ceramic balls, restricted tolerances	*1146*
HCM70..-C	Super precision angular contact ball bearings, medium series, contact angle α = 17°, with ceramic balls, restricted tolerances	*1156*
HCM70..-CDLR	Super precision angular contact ball bearings, medium series, contact angle α = 17°, with ceramic balls, restricted tolerances, in Direct Lube design	*1210*
HCM70..-E	Super precision angular contact ball bearings, medium series, contact angle α = 25°, with ceramic balls, restricted tolerances	*1156*
HCM70..-EDLR	Super precision angular contact ball bearings, medium series, contact angle α = 25°, with ceramic balls, restricted tolerances, in Direct Lube design	*1210*
HCM719..-C	Super precision angular contact ball bearings, light series, contact angle α = 17°, with ceramic balls, restricted tolerances	*1156*
HCM719..-CDLR	Super precision angular contact ball bearings, light series, contact angle α = 17°, with ceramic balls, restricted tolerances, in Direct Lube design	*1210*

Series	Description	Page
HCM719..-E	Super precision angular contact ball bearings, light series, contact angle α = 25°, with ceramic balls, restricted tolerances	1156
HCM719..-EDLR	Super precision angular contact ball bearings, light series, contact angle α = 25°, with ceramic balls, restricted tolerances, in Direct Lube design	1210
HCN10..-K-PVPA1-SP	Super precision cylindrical roller bearings, non-locating bearings, with tapered bore, taper 1:12, separable, with cage, with ceramic rollers	1228
HF	Drawn cup roller clutches, without bearing arrangement, with steel springs	987
HF..-KF	Drawn cup roller clutches, without bearing arrangement, with plastic springs	987
HF..-KF-R	Drawn cup roller clutches without bearing arrangement, with plastic springs, with knurling	987
HF..-R	Drawn cup roller clutches without bearing arrangement, with steel springs, with knurling	987
HFL	Drawn cup roller clutches, with plain or rolling bearings, steel springs	989
HFL..-KF	Drawn cup roller clutches, with plain or rolling bearings, plastic springs	989
HFL..-KF-R	Drawn cup roller clutches, with plain or rolling bearings, plastic springs, with knurling	989
HFL..-R	Drawn cup roller clutches, with plain or rolling bearings, steel springs, with knurling	989
HJ	L-section rings	456
HJ..-E	L-section rings	454
HK	Drawn cup needle roller bearings with open ends	866
HK..-2RS	Drawn cup needle bearings with open ends, sealed on both sides	872
HK..-RS	Drawn cup needle bearings with open ends, sealed on one side	872
HM	Locknuts	1727
HM30	Locknuts	1727
HM31	Locknuts	1727
HMZ	Shaft nuts, metric fine pitch thread, with clamping screws	1730
HMZ30	Shaft nuts, trapezoidal thread, with clamping screws	1730
HN	Drawn cup needle roller bearings, full complement	874
HS70..-C	Super precision angular contact ball bearings, contact angle α = 15°, restricted tolerances	1146
HS70..-E	Super precision angular contact ball bearings, contact angle α = 25°, restricted tolerances	1146
HS719..-C	Super precision angular contact ball bearings, contact angle α = 15°, restricted tolerances	1146
HS719..-E	Super precision angular contact ball bearings, contact angle α = 25°, restricted tolerances	1146
IR	Inner rings without lubrication hole, precision machined	964
IR..-IS1	Inner rings with lubrication hole, precision machined	970
JK0S	Integral tapered roller bearings, sealed on one side	648
K	Needle roller and cage assemblies	838
K..-ZW	Needle roller and cage assemblies, double row	840
K811	Axial cylindrical roller and cage assemblies, single row	1054
K812	Axial cylindrical roller and cage assemblies, single row	1054
K893	Axial cylindrical roller and cage assemblies, double row	1054
K894	Axial cylindrical roller and cage assemblies, double row	1054
KLR	Track rollers with plastic tyre, sealed on both sides	1435
KM	Locknuts	1726
KML	Locknuts	1726
KR	Stud type needle roller bearing track rollers with axial guidance, gap seal on both sides	1410
KR..-PP	Stud type needle roller bearing track rollers with axial guidance, plastic axial plain washer on both sides	1410

Series	Description	Page
KR52..-2RS	Stud type ball bearing track rollers, double row, lip seal on both sides	1432
KRE..-PP	Stud type needle roller bearing track rollers with axial guidance, with eccentric collar, plastic axial plain washer on both sides	1410
KRV..-PP	Stud type needle roller bearing track rollers with axial guidance, full complement, plastic axial plain washer on both sides	1410
K-Series	Tapered roller bearings, single row to ANSI/ABMA	624
LR	Inner rings without lubrication hole, increased tolerances	867
LR2	Yoke type ball bearing track rollers, sealed on both sides	1428
LR50	Yoke type ball bearing track rollers, double row, sealed on both sides	1429
LR52	Yoke type ball bearing track rollers, double row, sealed on both sides	1430
LR53	Yoke type ball bearing track rollers, double row, sealed on both sides	1430
LR6	Yoke type ball bearing track rollers, sealed on both sides	1428
LS	Bearing washers	1055
LSL1923	Cylindrical roller bearings with disc cage, semi-locating bearings	498
M70..-C	Super precision angular contact ball bearings, medium series, contact angle $\alpha = 17°$, restricted tolerances	1156
M70..-E	Super precision angular contact ball bearings, medium series, contact angle $\alpha = 25°$, restricted tolerances	1156
M719..-C	Super precision angular contact ball bearings, light series, contact angle $\alpha = 17°$, restricted tolerances	1154
M719..-E	Super precision angular contact ball bearings, light series, contact angle $\alpha = 25°$, restricted tolerances	1154
MB	Tab washers	1732
MBL	Tab washers	1732
MS30	Retaining brackets, with hexagon head cap screw	1734
MS31	Retaining brackets, with hexagon head cap screw	1734
N10..-K-M1-SP	Super precision cylindrical roller bearings, non-locating bearings, with tapered bore, taper 1:12, separable, with cage, with steel rollers	1234
N10..-K-PVPA1-SP	Super precision cylindrical roller bearings, non-locating bearings, with tapered bore, taper 1:12, separable, with cage, with steel rollers	1228
N10..-K-TVP-SP	Super precision cylindrical roller bearings, non-locating bearings, with tapered bore, taper 1:12, separable, with cage, with steel rollers	1228
N2..-E	Cylindrical roller bearings with cage, non-locating bearings	438
N3..-E	Cylindrical roller bearings with cage, non-locating bearings	438
NA22..-2RSR	Yoke type roller bearing track rollers without axial guidance, lip seal on both sides	1404
NA48	Needle roller bearings with ribs, with inner ring	918
NA49	Needle roller bearings with ribs, with inner ring	914
NA49..-2RSR	Needle roller bearings with ribs, with inner ring, lip seal on both sides	921
NA49..-RSR	Needle roller bearings with ribs, with inner ring, lip seal on one side	921
NA69	Needle roller bearings with ribs, with inner ring	914
NA69..-ZW	Needle roller bearings with ribs, double row, with inner ring	915
NAO	Needle roller bearing without ribs, with inner ring	926

Series	Description	Page
NAO..-ZW-ASR1	Needle roller bearings without ribs, double row, with inner ring	*926*
NATR	Yoke type roller bearing track rollers with axial guidance, gap seal on both sides	*1405*
NATR..-PP	Yoke type roller bearing track rollers with axial guidance, axial plain washer on both sides	*1405*
NATV	Yoke type roller bearing track rollers with axial guidance, full complement needle roller set, gap seal on both sides	*1405*
NATV..-PP	Yoke type roller bearing track rollers with axial guidance, full complement needle roller set, axial plain washer on both sides	*1405*
NE..-KRR-B	Radial insert ball bearings, spherical outer ring, location by eccentric locking collar, R type seal on both sides	*1500*
NJ2..-E	Cylindrical roller bearings with cage, semi-locating bearings	*454*
NJ22..-E	Cylindrical roller bearings with cage, semi-locating bearings	*454*
NJ23..-E	Cylindrical roller bearings with cage, semi-locating bearings	*454*
NJ3..-E	Cylindrical roller bearings with cage, semi-locating bearings	*454*
NJ4	Cylindrical roller bearings with cage, semi-locating bearings	*456*
NK	Needle roller bearings with ribs, without inner ring	*902*
NK..-D	Needle roller bearings with ribs, without inner ring, with improved steel cage	*902*
NK..-TW	Needle roller bearings with ribs, without inner ring, with plastic cage, two short needle rollers per cage pocket	*906*
NKI	Needle roller bearings with ribs, with inner ring	*914*
NKI..-TW	Needle roller bearings with ribs, with inner ring, with plastic cage, two short needle rollers per cage pocket	*915*
NKIA	Needle roller/angular contact ball bearings with inner ring, single direction axial component	*956*
NKIB	Needle roller/angular contact ball bearings with inner ring, double direction axial component	*956*
NKIS	Needle roller bearings with ribs, with inner ring	*914*
NKS	Needle roller bearings with ribs, without inner ring	*904*
NKX	Axial deep groove ball bearings, single direction axial component, without end cap, for oil lubrication	*952*
NKX..-Z	Needle roller/axial deep groove ball bearings, single direction axial component, with end cap, for grease lubrication	*952*
NKXR	Needle roller/axial cylindrical roller bearings, single direction axial component, without end cap, for oil lubrication	*954*
NKXR..-Z	Needle roller/axial cylindrical roller bearings, single direction axial component, with end cap, for grease lubrication	*954*
NN30..-AS-K-M-SP	Super precision cylindrical roller bearings, double row, non-locating bearings, with tapered bore, taper 1:12	*1238*
NN30..-K-TVP-SP	Super precision cylindrical roller bearings, double row, non-locating bearings, with tapered bore, taper 1:12	*1236*
NNTR..-2ZL	Yoke type roller bearing track rollers with axial guidance, full complement cylindrical roller set, central rib, contact washers with lamellar ring on both sides	*1406*
NNU49..-S-K-M-SP	Super precision cylindrical roller bearings, double row, non-locating bearings, with tapered bore, taper 1:12	*1236*
NU10	Cylindrical roller bearings with cage, non-locating bearings	*438*

Series	Description	Page
NU19	Cylindrical roller bearings with cage, non-locating bearings	452
NU2..-E	Cylindrical roller bearings with cage, non-locating bearings	438
NU22..-E	Cylindrical roller bearings with cage, non-locating bearings	438
NU23..-E	Cylindrical roller bearings with cage, non-locating bearings	438
NU3..-E	Cylindrical roller bearings with cage, non-locating bearings	438
NU4	Cylindrical roller bearings with cage, non-locating bearings	438
NUKR	Stud type cylindrical roller bearing track rollers with axial guidance, full complement, labyrinth seal on both sides	1414
NUKRE	Stud type cylindrical roller bearing track rollers with axial guidance, full complement, with eccentric collar, labyrinth seal on both sides	1414
NUP2..-E	Cylindrical roller bearings with cage, locating bearings	454
NUP22..-E	Cylindrical roller bearings with cage, locating bearings	454
NUP23..-E	Cylindrical roller bearings with cage, locating bearings	454
NUP3..-E	Cylindrical roller bearings with cage, locating bearings	454
NUTR	Yoke type roller bearing track rollers with optimised INA profile and axial guidance, labyrinth seal on both sides	1408
NX	Needle roller/axial deep groove ball bearings, single direction axial component, for oil lubrication	950
NX..-Z	Needle roller/axial deep groove ball bearings, single direction axial component, for grease lubrication	950
PE	Radial insert ball bearings, cylindrical outer ring, with steel aligning ring, location by eccentric locking collar, P type seal on both sides	1536
PNA	Aligning needle roller bearings, with inner ring	929
PWKR..-2RS	Stud type cylindrical roller bearing track rollers with axial guidance, full complement, protected lip seal on both sides	1414
PWKRE..-2RS	Stud type cylindrical roller bearing track rollers with axial guidance, full complement, with eccentric collar, protected lip seal on both sides	1414
PWTR..-2RS	Yoke type roller bearing track rollers with optimised INA profile and axial guidance, protected lip seal on both sides	1408
QJ10	Four point contact bearings, without retaining slots	366
QJ10..-N2	Four point contact bearings, with two retaining slots	366
QJ2	Four point contact bearings, without retaining slots	366
QJ2..-N2	Four point contact bearings, with two retaining slots	368
QJ3	Four point contact bearings, without retaining slots	366
QJ3..-N2	Four point contact bearings, with two retaining slots	366
RA..-NPP	Radial insert ball bearings, cylindrical outer ring, eccentric locking collar and P type seal, inch size bore	1518
RA..-NPP-B	Radial insert ball bearings, spherical outer ring, eccentric locking collar and P type seal, inch size bore	1512
RABR	Radial insert ball bearings, with rubber interliner, eccentric locking collar and P type seal	1534
RAE..-NPP	Radial insert ball bearings, cylindrical outer ring, eccentric locking collar and P type seal	1504
RAE..-NPP-B	Radial insert ball bearings, spherical outer ring, eccentric locking collar and P type seal	1496
RAE..-NPP-NR	Radial insert ball bearings, cylindrical outer ring, eccentric locking collar and P type seal, snap ring	1504
RAL..-NPP	Radial insert ball bearings, cylindrical outer ring, eccentric locking collar and P type seal, inch size bore, light series	1518
RALE..-NPP	Radial insert ball bearings, cylindrical outer ring, eccentric locking collar and P type seal, light series	1504

Series	Description	Page
RALE..-NPP-B	Radial insert ball bearings, spherical outer ring, eccentric locking collar and P type seal, light series	*1496*
RCR	Radial insert ball bearings, with rubber interliner, eccentric locking collar and P type seal, no relubrication facility	*1534*
RCSM	Radial insert ball bearings, with rubber interliner, eccentric locking collar and P type seal	*1534*
RNA22..-2RSR	Yoke type roller bearing track rollers without axial guidance, without inner ring, lip seal on both sides	*1404*
RNA48	Needle roller bearings with ribs, without inner ring	*911*
RNA49	Needle roller bearings with ribs, without inner ring	*902*
RNA49..-2RSR	Needle roller bearings with ribs, without inner ring, lip seal on both sides	*920*
RNA49..-RSR	Needle roller bearings with ribs, without inner ring, lip seal on one side	*920*
RNA69	Needle roller bearings with ribs, without inner ring	*902*
RNA69..-ZW	Needle roller bearings with ribs, double row, without inner ring	*906*
RNAO	Needle roller bearings without ribs, without inner ring	*922*
RNAO..-ZW-ASR1	Needle roller bearings without ribs, double row, without inner ring	*922*
RPNA	Aligning needle roller bearings, without inner ring	*928*
RSTO	Yoke type roller bearing track rollers without axial guidance, without inner ring	*1403*
SD	Sealing rings, polyamide and PU elastomer, double lip	*1002*
SK..-KRR	Self-aligning deep groove ball bearings, cylindrical outer ring, hexagonal bore and R type seal	*1532*
SK..-KRR-B	Self-aligning deep groove ball bearings, spherical outer ring, hexagonal bore and R type seal	*1530*
SK..-KTT	Self-aligning deep groove ball bearings, cylindrical outer ring, hexagonal bore and T type seal	*1532*
SK..-KTT-B	Self-aligning deep groove ball bearings, spherical outer ring, hexagonal bore and T type seal	*1530*
SL0148	Double row full complement cylindrical roller bearings, locating bearings	*550*
SL0149	Double row full complement cylindrical roller bearings, locating bearings	*548*
SL0248	Double row full complement cylindrical roller bearings, non-locating bearings	*550*
SL0249	Double row full complement cylindrical roller bearings, non-locating bearings	*548*
SL04..-PP	Double row full complement cylindrical roller bearings, locating bearings, light series, with annular slots, lip seal on both sides	*556*
SL0450..-PP	Double row full complement cylindrical roller bearings, locating bearings, dimension series 50, with annular slots, lip seal on both sides	*556*
SL1818	Single row full complement cylindrical roller bearings, semi-locating bearings	*524*
SL1822	Single row full complement cylindrical roller bearings, semi-locating bearings	*518*
SL1829	Single row full complement cylindrical roller bearings, semi-locating bearings	*518*
SL1830	Single row full complement cylindrical roller bearings, semi-locating bearings	*518*
SL1850	Double row full complement cylindrical roller bearings, semi-locating bearings	*548*
SL1923	Single row full complement cylindrical roller bearings, semi-locating bearings, self-retaining roller set	*518*
SNS..-H-D	Plummer block housings, split, for bearings with tapered bore	*1638*
SNS..-H-D	Plummer block housings, split, for bearings with cylindrical bore	*1648*

Series	Description	Page
SNS..-Z-D	Plummer block housings, split, for bearings with cylindrical bore	1648
SNV..-F-L	Plummer block housings, split, for bearings with tapered bore	1586
SNV..-F-L	Plummer block housings, split, for bearings with cylindrical bore	1598
STO	Yoke type roller bearing track rollers without axial guidance, with inner ring	1403
SUB	Radial insert ball bearings, spherical outer ring, grub screws in narrow inner ring and RSR type seal, corrosion-resistant VA design	1538
SUC	Radial insert ball bearings, spherical outer ring, grub screws in inner ring and RSR type seal, flinger shields, corrosion-resistant VA design	1540
SUG	Radial insert ball bearings, spherical outer ring, eccentric locking collar and RSR type seal, corrosion-resistant VA design	1542
SX	Crossed roller bearings	1136
T	Tapered roller bearings, single row	596
U	Support washer	1018
UC	Radial insert ball bearings JIS range, spherical outside surface, grub screws in inner ring, Durotect BS coating, relubrication facility	1546
UK	Radial insert ball bearings JIS range, spherical outside surface, with adapter sleeve, Durotect BS coating, relubrication facility	1552
VCM70..-C	Super precision angular contact ball bearings, medium series, contact angle $\alpha = 17°$, with ceramic balls, with Vacrodur rings, restricted tolerances	1156
VCM70..-CDLR	Super precision angular contact ball bearings, medium series, contact angle $\alpha = 17°$, with ceramic balls, with Vacrodur rings, restricted tolerances, in Direct Lube design	1210
VCM70..-E	Super precision angular contact ball bearings, medium series, contact angle $\alpha = 25°$, with ceramic balls, with Vacrodur rings, restricted tolerances	1156
VCM70..-EDLR	Super precision angular contact ball bearings, medium series, contact angle $\alpha = 25°$, with ceramic balls, with Vacrodur rings, restricted tolerances, in Direct Lube design	1210
VCM719..-C	Super precision angular contact ball bearings, light series, contact angle $\alpha = 17°$, with ceramic balls, with Vacrodur rings, restricted tolerances	1156
VCM719..-CDLR	Super precision angular contact ball bearings, light series, contact angle $\alpha = 17°$, with ceramic balls, with Vacrodur rings, restricted tolerances, in Direct Lube design	1210
VCM719..-E	Super precision angular contact ball bearings, light series, contact angle $\alpha = 25°$, with ceramic balls, with Vacrodur rings, restricted tolerances	1156
VCM719..-EDLR	Super precision angular contact ball bearings, light series, contact angle $\alpha = 25°$, with ceramic balls, with Vacrodur rings, restricted tolerances, in Direct Lube design	1210
VK..-KTT-B	Self-aligning deep groove ball bearings, spherical outer ring, square bore and T type seal	1528
WS222..-E1	Spherical roller bearings with cylindrical bore, lip seal on both sides	768
WS222..-E1-K	Spherical roller bearings with tapered bore, lip seal on both sides	768
WS223..-E1	Spherical roller bearings with cylindrical bore, lip seal on both sides	768
WS223..-E1-K	Spherical roller bearings with tapered bore, lip seal on both sides	768
WS811	Shaft locating washers	1055
WS812	Shaft locating washers	1055

Series	Description	Page
WS893	Shaft locating washers	*1055*
WS894	Shaft locating washers	*1055*
XC70..-E	Super precision angular contact ball bearings, contact angle $\alpha = 25°$, with ceramic balls, restricted tolerances, with Cronidur rings	*1146*
XC70..-EDLR	Super precision angular contact ball bearings, contact angle $\alpha = 25°$, with ceramic balls, restricted tolerances, with Cronidur rings, in Direct Lube design	*1210*
XC719..-E	Super precision angular contact ball bearings, contact angle $\alpha = 25°$, with ceramic balls, restricted tolerances, with Cronidur rings	*1146*
YRT	Axial/radial bearings, double direction	*1344*
YRTC	Axial/radial bearings, double direction	*1346*
YRTCM	Axial/radial bearings with incremental angular measuring system, double direction	*1352*
YRTCMA	Axial/radial bearings with absolute value angular measuring system, double direction	*1356*
YRTS	Axial/radial bearings, double direction, for higher speeds	*1348*
YRTSM	Axial/radial bearings with incremental angular measuring system, double direction, for higher speeds	*1354*
YRTSMA	Axial/radial bearings with absolute value angular measuring system, double direction, for higher speeds	*1358*
ZARF	Needle roller/axial cylindrical roller bearings, double direction, with fixing holes	*1310*
ZARF..-L	Needle roller/axial cylindrical roller bearings, double direction, with fixing holes, long shaft locating washer	*1310*
ZARN	Needle roller/axial cylindrical roller bearings, double direction, without fixing holes	*1320*
ZARN..-L	Needle roller/axial cylindrical roller bearings, double direction, without fixing holes, long shaft locating washer	*1320*
ZKLDF	Axial angular contact ball bearings, double direction	*1350*
ZKLF..-2RS	Axial angular contact ball bearings, double direction, with fixing holes, lip seal on both sides	*1256*
ZKLF..-2RS-2AP	Axial angular contact ball bearings, matched pair, double direction, with fixing holes, lip seal on both sides	*1266*
ZKLF..-2RS-PE	Axial angular contact ball bearings, less stringent tolerances, double direction, with fixing holes, lip seal on both sides	*1264*
ZKLF..-2Z	Axial angular contact ball bearings, double direction, with fixing holes, gap seal on both sides	*1256*
ZKLFA..-2RS	Double row axial angular contact ball bearings with flange, double direction, with fixing holes, lip seal on both sides	*1302*
ZKLFA..-2Z	Double row axial angular contact ball bearings with flange, double direction, with fixing holes, gap seal on both sides	*1302*
ZKLN..-2RS	Axial angular contact ball bearings, double direction, without fixing holes, lip seal on both sides	*1268*
ZKLN..-2RS-2AP	Axial angular contact ball bearings, matched pair, double direction, without fixing holes, lip seal on both sides	*1278*
ZKLN..-2RS-PE	Axial angular contact ball bearings, less stringent tolerances, double direction, without fixing holes, lip seal on both sides	*1276*
ZKLN..-2Z	Axial angular contact ball bearings, double direction, without fixing holes, gap seal on both sides	*1268*
ZKLR..-2RS	Angular contact ball bearing units, double direction, for screw mounting, lip seal on both sides	*1300*
ZKLR..-2Z	Angular contact ball bearing units, double direction, for screw mounting, gap seal on both sides	*1300*

Series	Description	Page
ZL2..-DRS	Stud type ball bearing track rollers, single row, sealed	*1432*
ZL52..-DRS	Stud type ball bearing track rollers, double row, sealed	*1432*
ZLE52..-2Z	Stud type track rollers with eccentric collar, double row, gap seal on both sides	*1434*
ZM	Precision locknuts, locking pegs arranged radially	*1333*
ZMA	Precision locknuts, locking pegs arranged radially, heavy series	*1333*
ZSL1923	Cylindrical roller bearings with spacers, semi-locating bearings	*500*

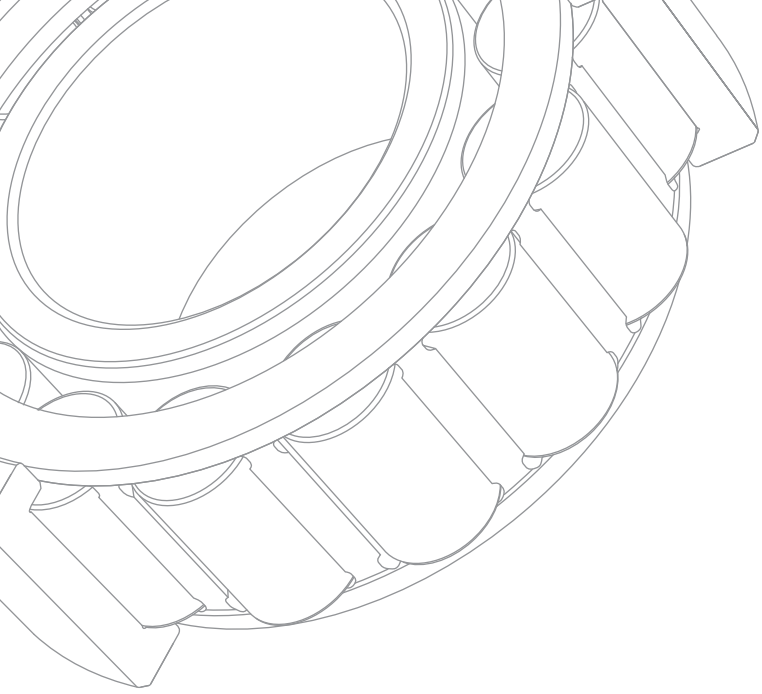

Schaeffler Technologies AG & Co. KG

Georg-Schäfer-Straße 30
97421 Schweinfurt
Germany
www.schaeffler.de/en
info.de@schaeffler.com

In Germany:
Pohne 0180 5003872
From other countries:
Pohne +49 9721 91-0

HR 1 / 02 / en-GB / DE / 2024-02