Driven Linear Units

Linear actuators
Tandem actuators
Clamping actuators
Compact actuators
Telescopic actuators
Linear tables
Drives and controls
Accessories

SCHAEFFLER

Driven Linear Units

Linear actuators
Tandem actuators
Clamping actuators
Compact actuators
Telescopic actuators
Linear tables
Drives and controls
Accessories

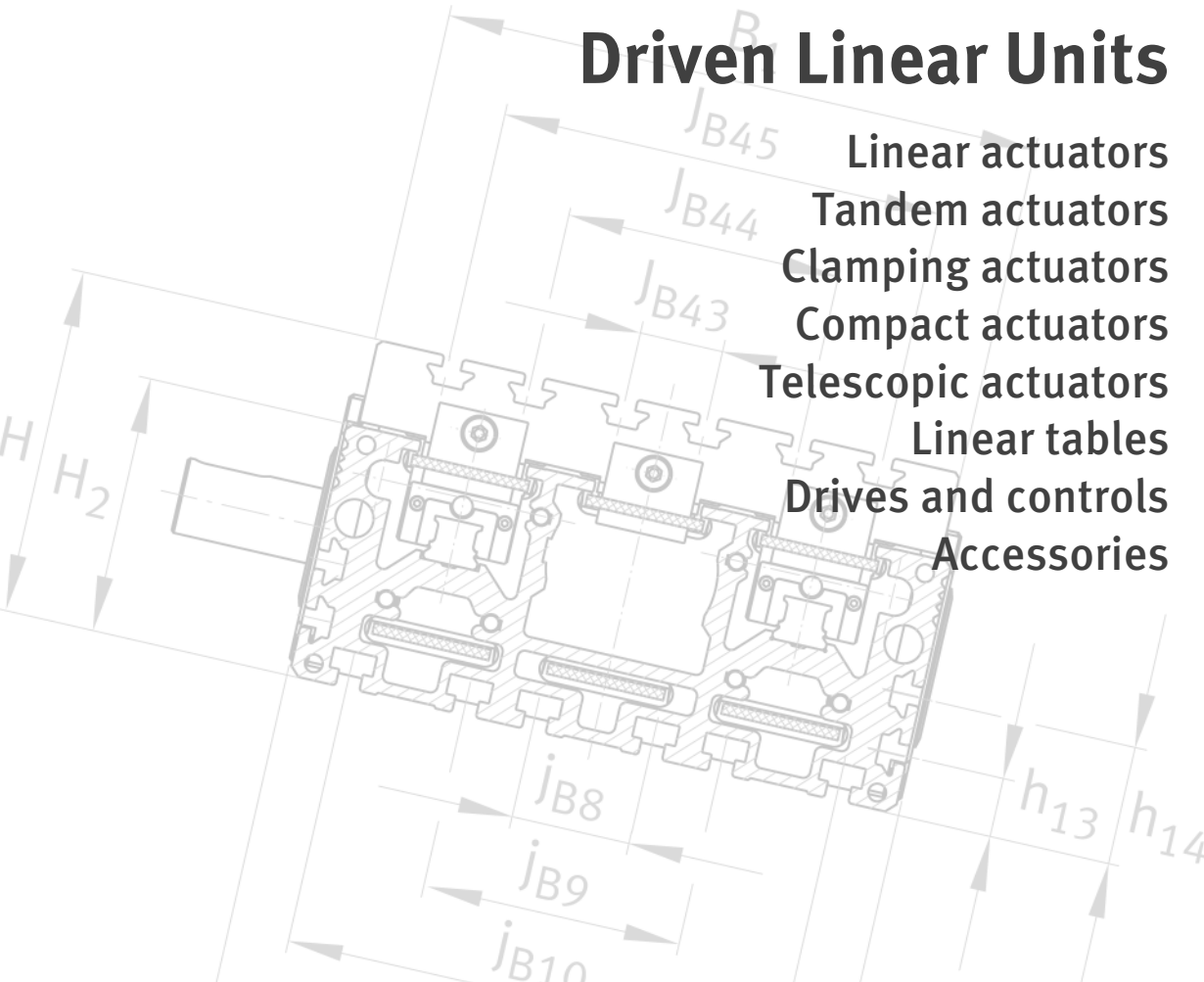

Issued: 2014, August

Foreword

Driven linear units

Rapid progress in the automation of production and assembly processes has pushed forward the development of complete, driven assemblies. These comprise a high precision guidance system, a rigid support rail, a wear-free drive unit with a servo motor and a user-friendly controller.

INA linear, tandem and clamping actuators are integrated modular systems containing all the components required for operation. The actuators are guided by linear recirculating ball bearing and guideway assemblies of series KUVE or KUSE or by a track roller guidance system LF. Drive is provided by a ball screw drive KGT or by one or three toothed belts ZR.

Comprehensive product range

The product range extends from the “Miniature” actuator with a small cross-section that is particularly suitable for applications requiring a very small design envelope, via actuators that offer an additional function (Low-Noise, High-Speed, integrated gearbox, two carriages in opposing motion), through to the high load capacity “Heavy Duty” tandem actuator. These tandem actuators are used in machine tool peripheral systems or automation technology as well as for assembly equipment, where high masses, forces and moments are present. As a result, the objectives involved can be achieved rapidly, reliably and precisely.

Linear tables

INA linear tables are used predominantly in applications where short stroke lengths are required. Linear tables with a shaft guidance system, which are suitable for lighter to moderate loads, are fitted with linear ball bearings KB or KBO. These linear tables are available without drive, with a trapezoidal screw drive or with a ball screw drive.

High precision linear tables with high load carrying capacity and accuracy are fitted with linear recirculating ball bearing and guideway assemblies KUE or KUSE and drive is provided by a ball screw drive.

Accessories

The product range of driven linear units is rounded off by:

- appropriate mechanical accessories (fasteners and connecting brackets) that are used to connect the linear unit to the adjacent construction or, in the case of multi-axis positioning systems, to connect linear units to each other
- couplings, coupling housings and belt transmissions that are used for linkage to the drive motor
- electric drives and controls (motors, motor/gearbox units, controllers) that are optimally matched to each other, in order that the optimum complete solution for the application can be configured very easily from all these components.

Foreword

Advice and support

The Schaeffler application engineering departments and engineering service can assist you in the selection of appropriate linear units. Our engineers and technicians can provide comprehensive advice and prepare installation proposals on the basis of considerable experience and knowledge of a comprehensive range of linear guidance systems.

Replacement for ...

This publication AL 1 replaces the previous publication ALE, issued in January 2003.

Contents

Product index

Product index

00019DA0

00019DA5

00019DA8

00019DAB

0001A156

0001A179

00019DAE

00019DB1

00019DC0

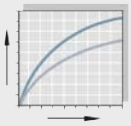
00015CE8

Technical principles

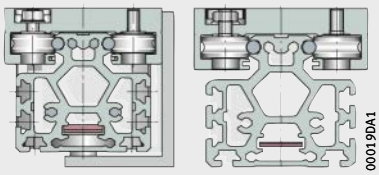
00019DA1

Linear and clamping actuators

- External track roller guidance system
- Toothed belt drive

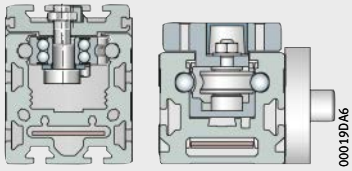
00019DA6

Linear actuators

- Internal track roller guidance system
- Toothed belt drive

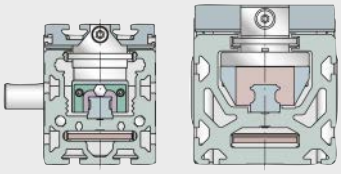
00019DA9

Linear, tandem and clamping actuators

- Monorail guidance system
- Toothed belt drive

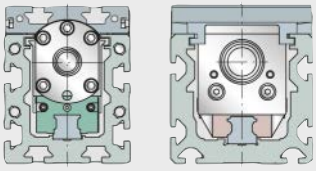
00019DAC

Linear, tandem and clamping actuators

- Monorail guidance system
- Ball screw drive

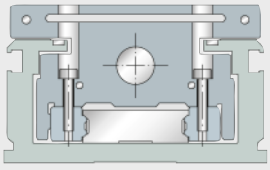
0001A0A1

Compact actuators

- Monorail guidance system
- Ball screw drive

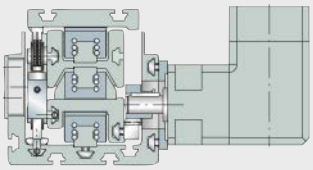
0001A09F

Telescopic actuators

- Monorail guidance system
- Toothed rack drive

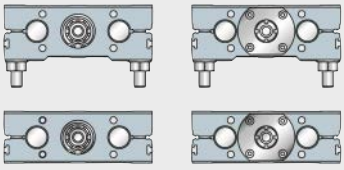
00019DAF

Linear tables

- Open shaft guidance system
- Closed shaft guidance system
- High precision linear tables

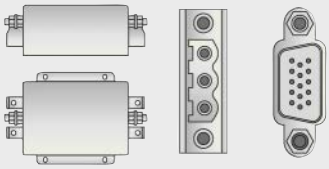
00019DB2

Drives and controls

- Digital servo controllers
- Motors and gearboxes
- Inductive proximity switches

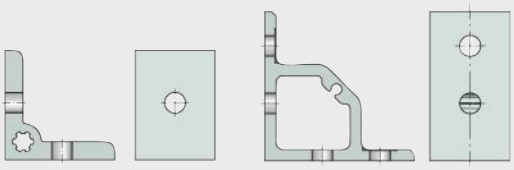
00019DC1

Mechanical accessories


00018048

Appendix

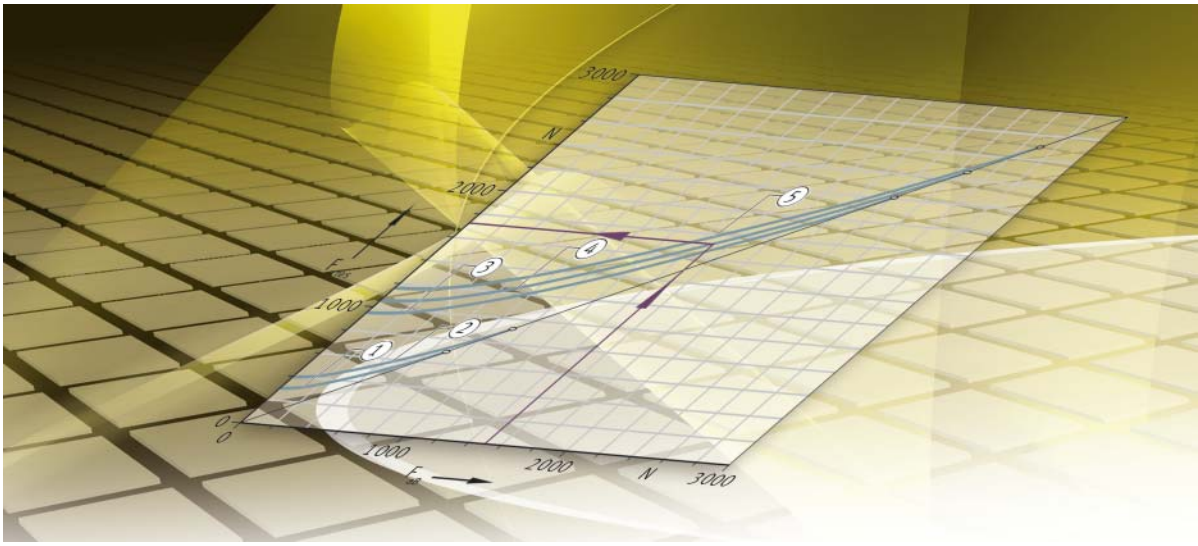

Technical principles

Product preselection
Load carrying capacity and rating life
Critical speed of screw drives
Lubrication

Technical principles

Product preselection

In the preselection of an actuator, attention must be paid to the combination of the mass to be moved and the velocity. The bearing arrangement of the toothed belt return unit must also be considered.

Toothed belt return units

The return unit for the toothed belt can restrict the rating life of the actuator. Values for horizontal mounting, see table. For a different mounting position, please consult the Schaeffler engineering service.

Basic rating life of bearing arrangement of toothed belt return units in horizontal mounting

Actuator	Basic rating life[1]		At maximum velocity[2]
	L_S km	L_h h	m/s
MLF32..-ZR	>200 000	>20 000	3
MLFI200..-ZR			
MDKUSE25..-3ZR		20 000	
MDKUVE25..-3ZR			
MKUVE25..-ZR	113 000	10 400	
MKUSE25..-ZR			
MLF52..-ZR	152 000	14 000	
MLFI25..-ZR	112 000	10 500	
MDKUVE15..-ZR	95 000	9 000	
MDKUSE15..-3ZR			
MLFI140..-3ZR			

[1] Based on the stroke length of the carriage with horizontal mounting.

[2] Mean velocity over the total travel cycle.

Mass and velocity

The mass/velocity diagrams can be used for preselection of suitable actuators, starting *Figure 1*, page 15.

The curves are valid under the following conditions:

- a basic rating life of 20 000 h
- point type mass
- loading points of the forces at the centre of the carriage. As a result, torques resulting from the distance between the centre of gravity and the guidance system are not taken into consideration
- pure vertical load with a horizontal mounting position
- acceleration of 5 m/s^2.

The only mass/velocity combinations permissible are those that lie on or vertically below the curves and do not exceed the maximum permissible velocity v_{max}.

Loading points that are offset, and the resulting combined loads, will drastically reduce the loads that can be supported if the same rating life is to be achieved. If a loading point is offset, it is therefore recommended that the values should be reduced to 30% of the mass/velocity combinations in the diagrams. In the case of the clamping actuators MKLF..-ZR and MKKUSE20..-ZR, the mass applies to one carriage.

Actuators with external track roller guidance system and toothed belt drive

MLF32..-ZR

v = velocity
m = mass
v_{max} = maximum permissible velocity

Figure 1
Mass/velocity diagram
Horizontal mounting position

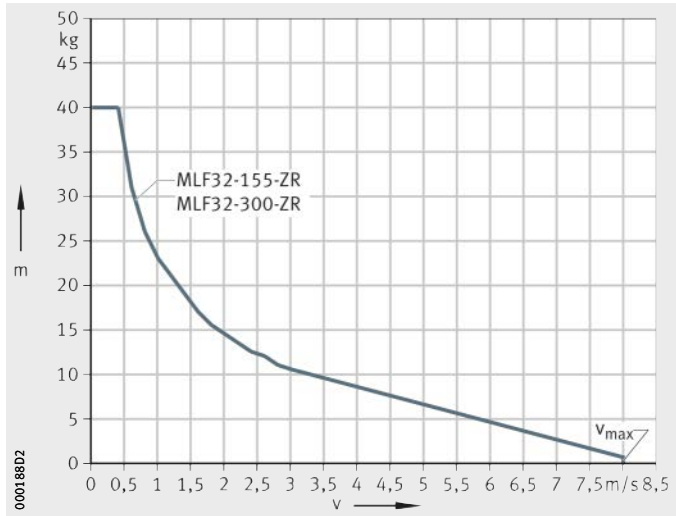

MLF32..-ZR

v = velocity
m = mass
v_{max} = maximum permissible velocity

Figure 2
Mass/velocity diagram
Vertical mounting position

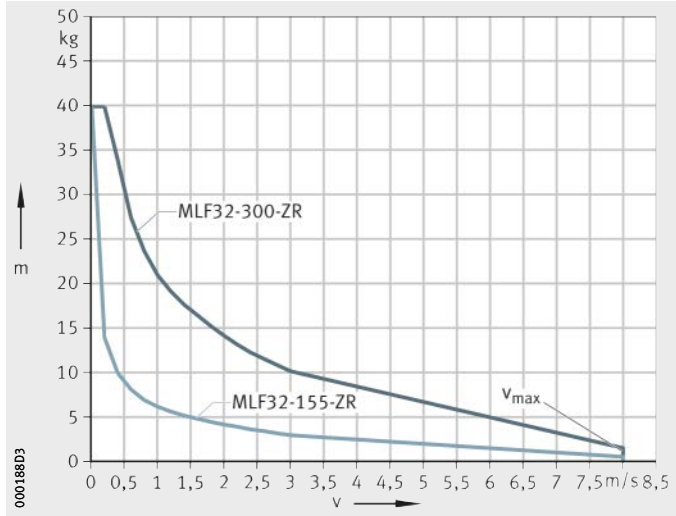

MLF52..-ZR

v = velocity
m = mass
v_{max} = maximum permissible velocity

Figure 3
Mass/velocity diagram
Horizontal mounting position

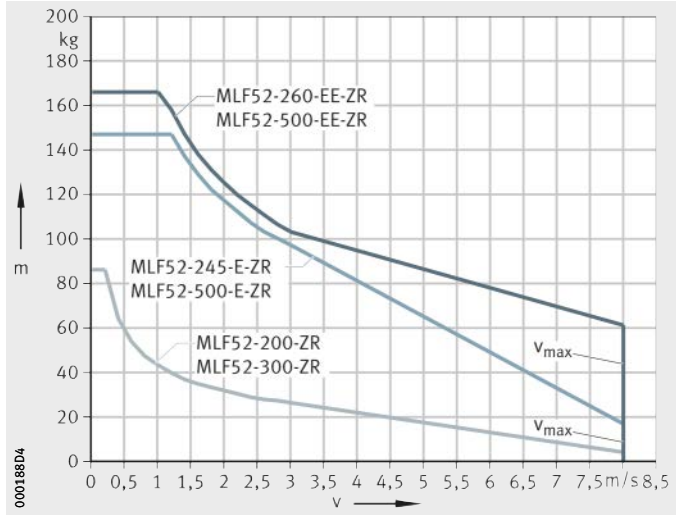

MLF52..-ZR

v = velocity
m = mass
v_{max} = maximum permissible velocity

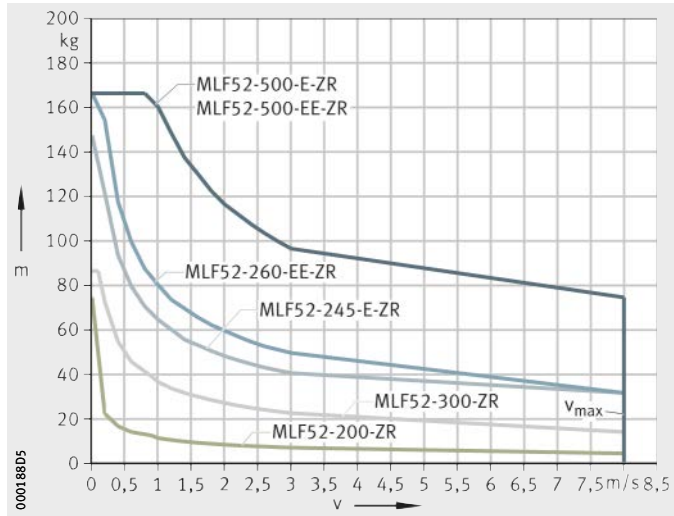

Figure 4
Mass/velocity diagram
Vertical mounting position

MKLF32..-ZR

v = velocity
m = mass
v_{max} = maximum permissible velocity

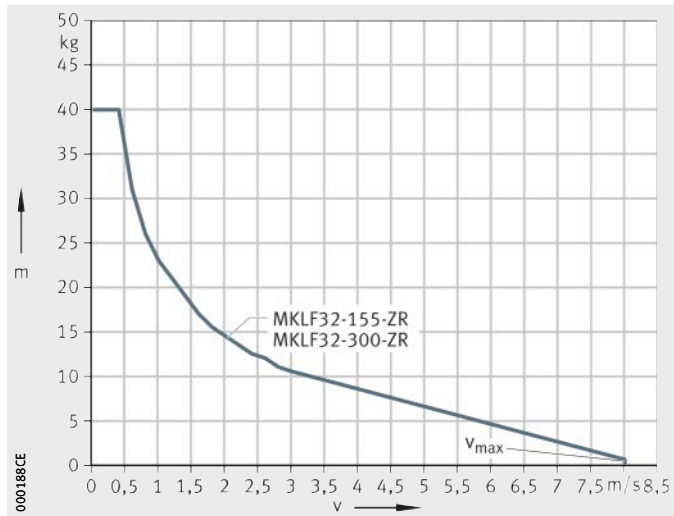

Figure 5
Mass/velocity diagram
Horizontal mounting position

MKLF32..-ZR

v = velocity
m = mass
v_{max} = maximum permissible velocity

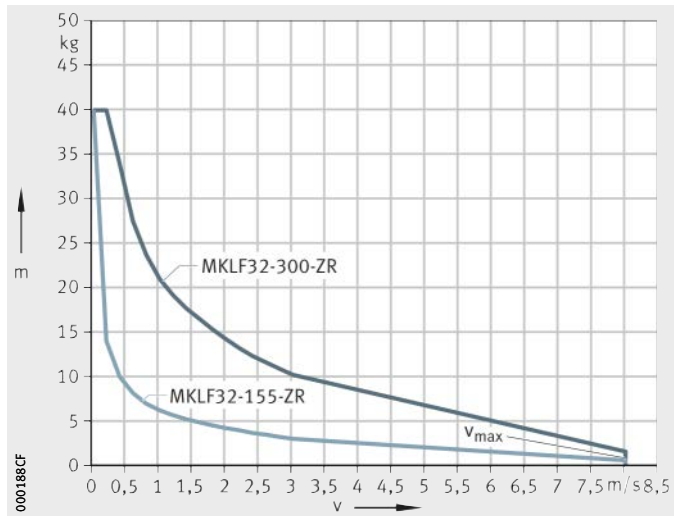

Figure 6
Mass/velocity diagram
Vertical mounting position

MKLF52..-ZR

v = velocity
m = mass
v_{max} = maximum permissible velocity

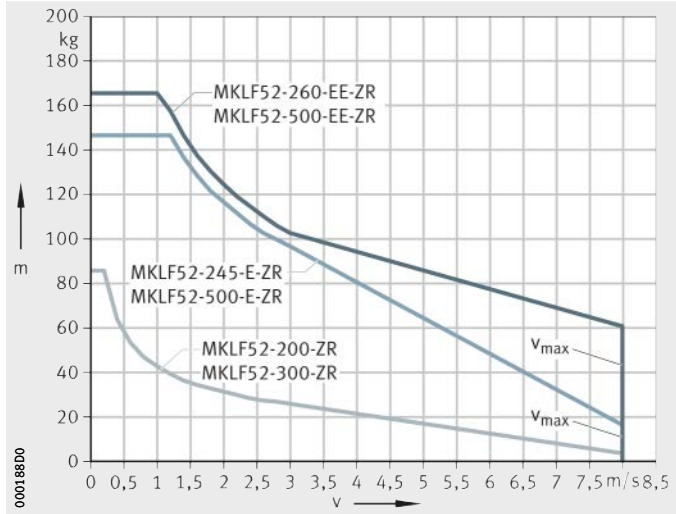

Figure 7
Mass/velocity diagram
Horizontal mounting position

MKLF52..-ZR

v = velocity
m = mass
v_{max} = maximum permissible velocity

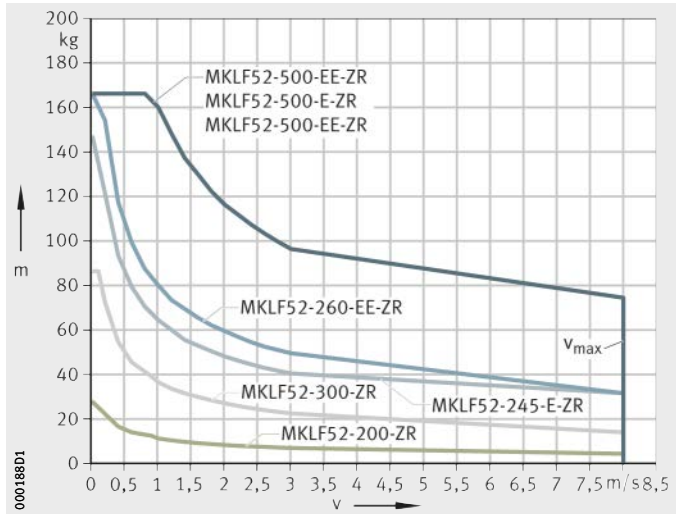

Figure 8
Mass/velocity diagram
Vertical mounting position

Actuators with internal track roller guidance system and toothed belt drive

MLFI25..-ZR

v = velocity
m = mass
v_{max} = maximum permissible velocity

Figure 9
Mass/velocity diagram
Horizontal mounting position

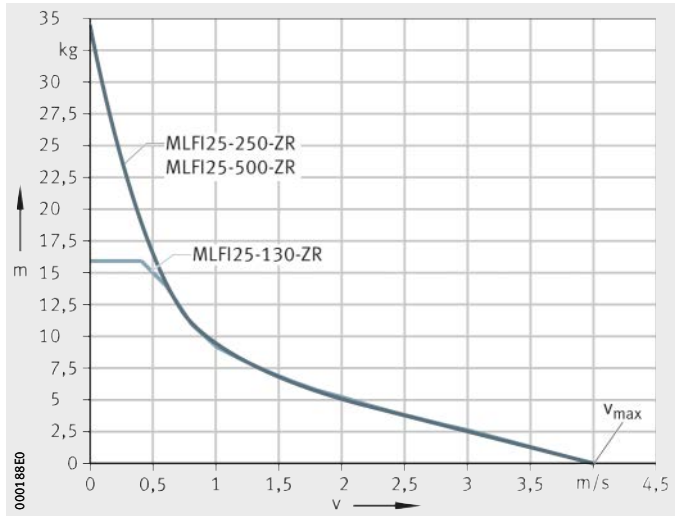

MLFI25..-ZR

v = velocity
m = mass
v_{max} = maximum permissible velocity

Figure 10
Mass/velocity diagram
Vertical mounting position

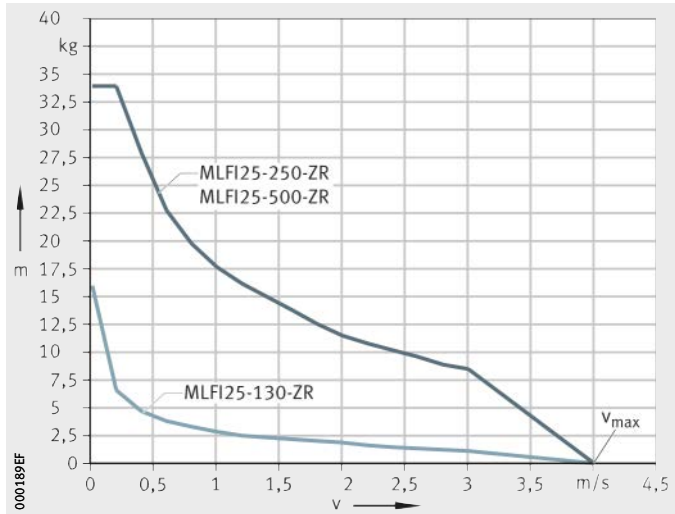

MLFI34..-ZR

v = velocity
m = mass
v_{max} = maximum permissible velocity

Figure 11
Mass/velocity diagram
Horizontal mounting position

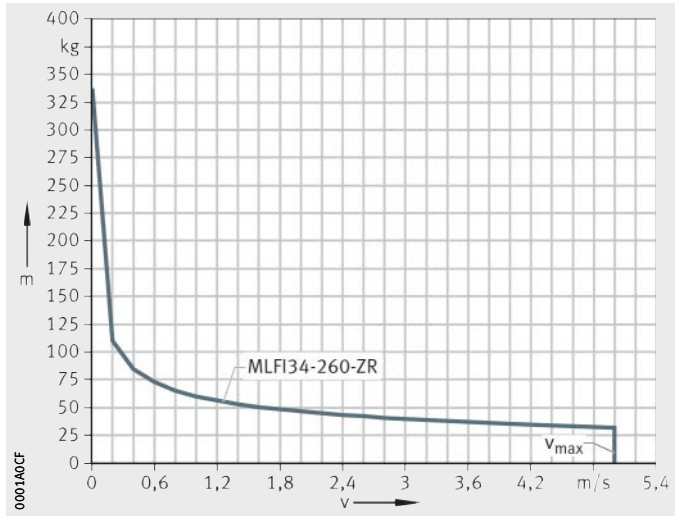

MLFI34..-ZR

v = velocity
m = mass
v_{max} = maximum permissible velocity

Figure 12
Mass/velocity diagram
Vertical mounting position

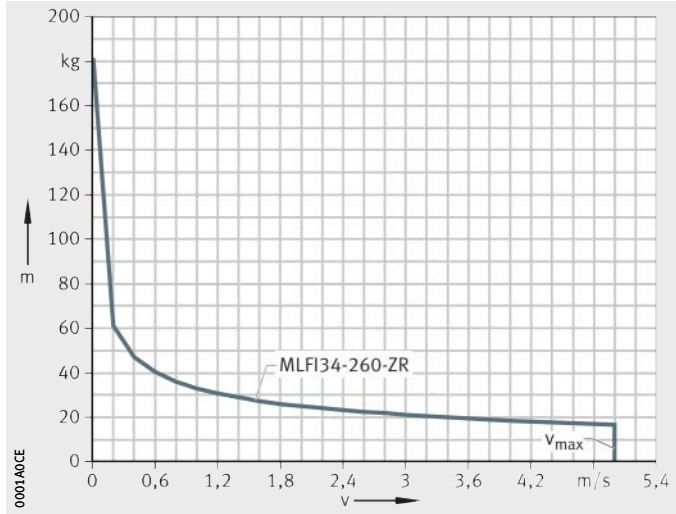

MLFI50..-C-ZR

v = velocity
m = mass
v_{max} = maximum permissible velocity

Figure 13
Mass/velocity diagram
Horizontal mounting position

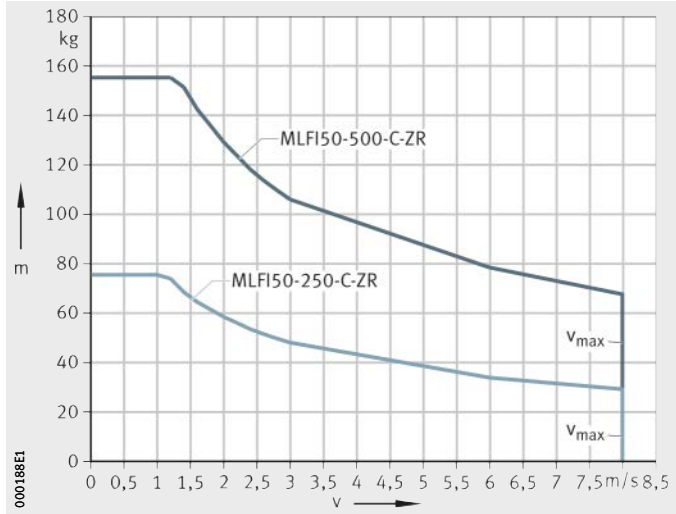

MLFI50..-C-ZR

v = velocity
m = mass
v_{max} = maximum permissible velocity

Figure 14
Mass/velocity diagram
Vertical mounting position

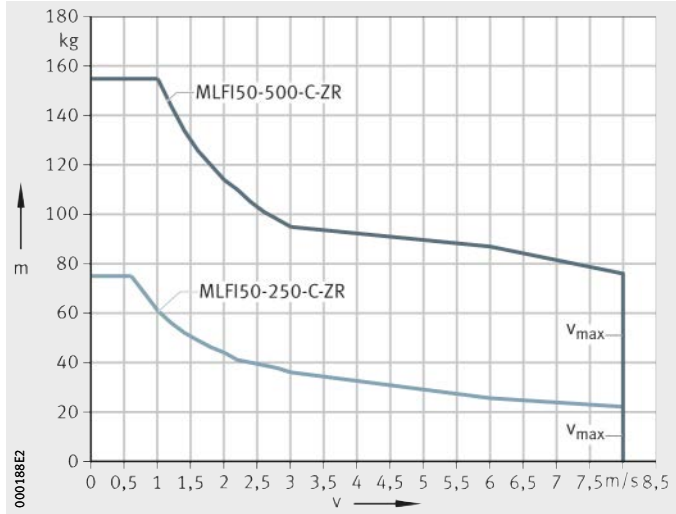

MLFI140..-3ZR
MLFI200..-3ZR

v = velocity
m = mass
v_{max} = maximum permissible velocity

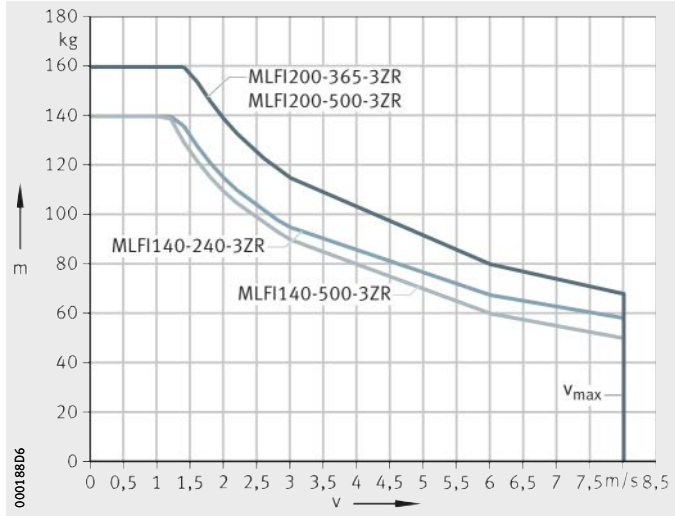

Figure 15
Mass/velocity diagram
Horizontal mounting position

MLFI140..-3ZR
MLFI200..-3ZR

v = velocity
m = mass
v_{max} = maximum permissible velocity

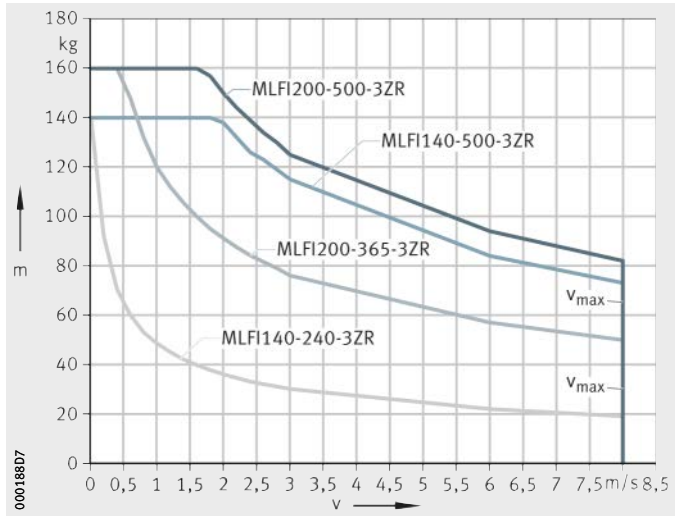

Figure 16
Mass/velocity diagram
Vertical mounting position

Actuators
with monorail guidance system and toothed belt drive

MKUVE15..-ZR

v = velocity
m = mass
v_{max} = maximum permissible velocity

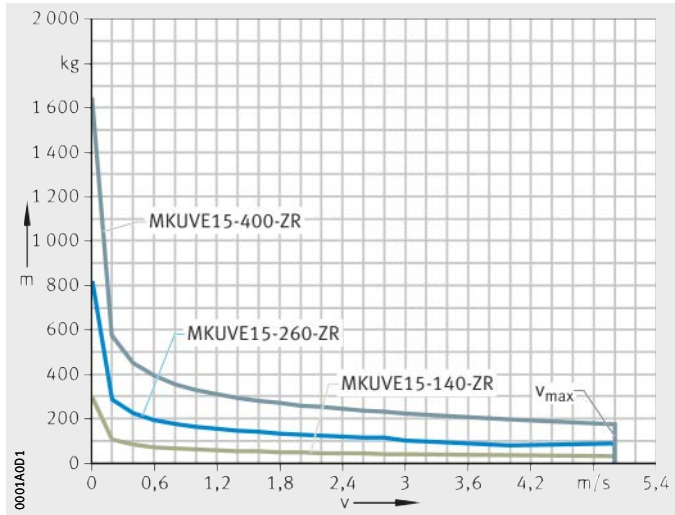

Figure 17
Mass/velocity diagram
Horizontal mounting position

MKUVE15..-ZR

v = velocity
m = mass
v_{max} = maximum permissible velocity

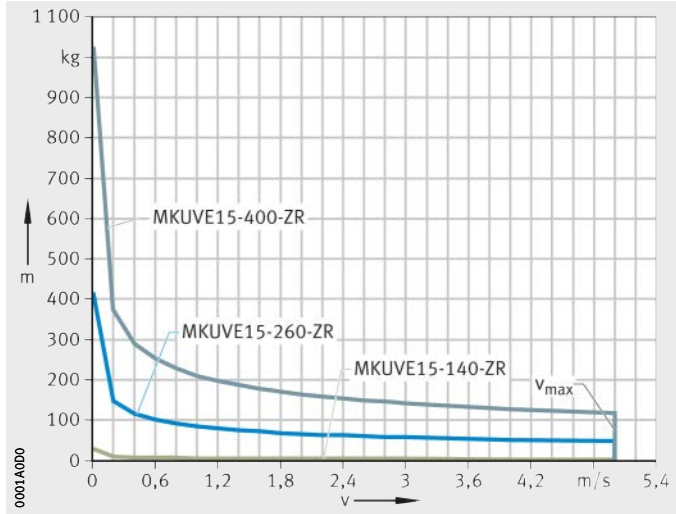

Figure 18
Mass/velocity diagram
Vertical mounting position

MKUVE20..-C-ZR
MKUVE20..-C-LN-ZR
MKUSE25..-ZR

v = velocity
m = mass
v_{max} = maximum permissible velocity

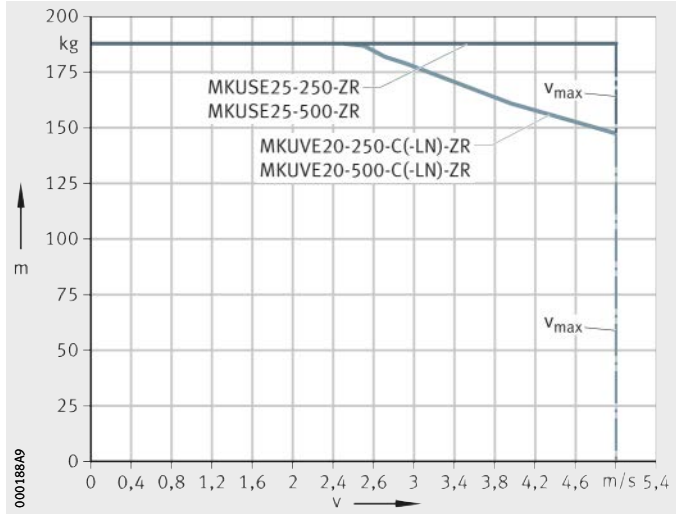

Figure 19
Mass/velocity diagram
Horizontal mounting position

MKUVE20..-C-ZR
MKUVE20..-C-LN-ZR
MKUSE25..-ZR

v = velocity
m = mass
v_{max} = maximum permissible velocity

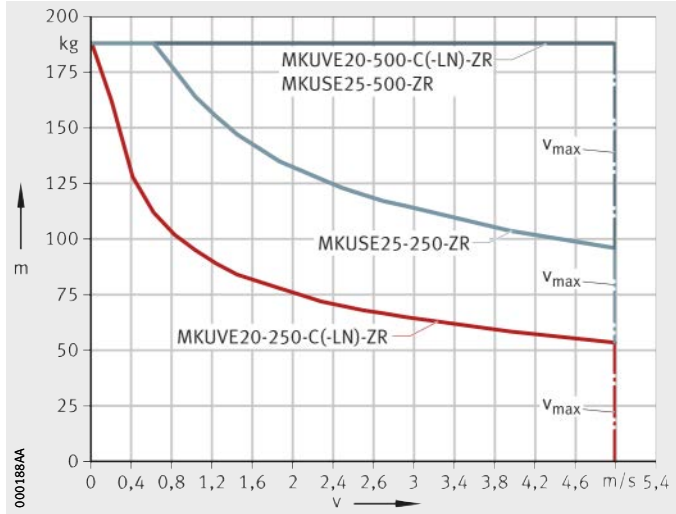

Figure 20
Mass/velocity diagram
Vertical mounting position

MDKUVE15..-3ZR
MDKUVE25..-3ZR
MDKUSE25..-3ZR
MDKUSE35-500-3ZR

v = velocity
m = mass
v_{max} = maximum permissible velocity

Figure 21
Mass/velocity diagram
Horizontal mounting position

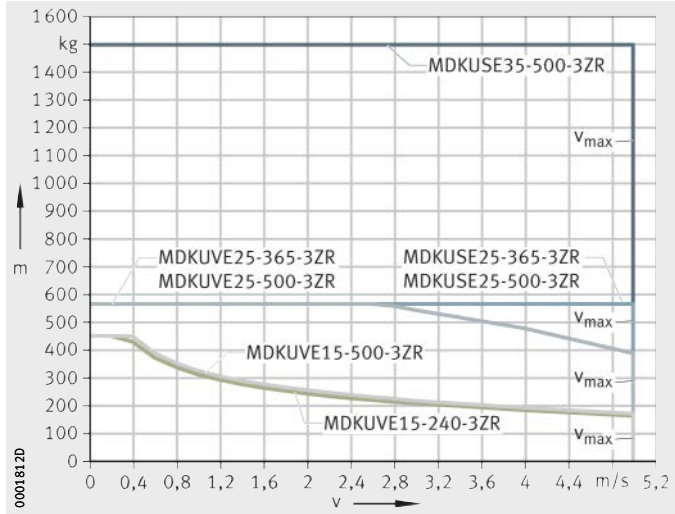

MDKUVE15..-3ZR
MDKUVE25..-3ZR
MDKUSE25..-3ZR
MDKUSE35-500-3ZR

v = velocity
m = mass
v_{max} = maximum permissible velocity

Figure 22
Mass/velocity diagram
Vertical mounting position

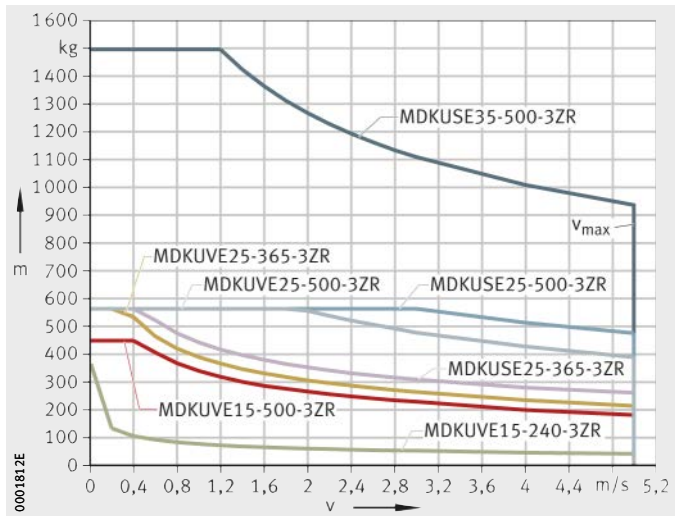

MKKUSE20-155-ZR

v = velocity
m = mass
v_{max} = maximum permissible velocity

Figure 23
Mass/velocity diagram
Horizontal mounting position

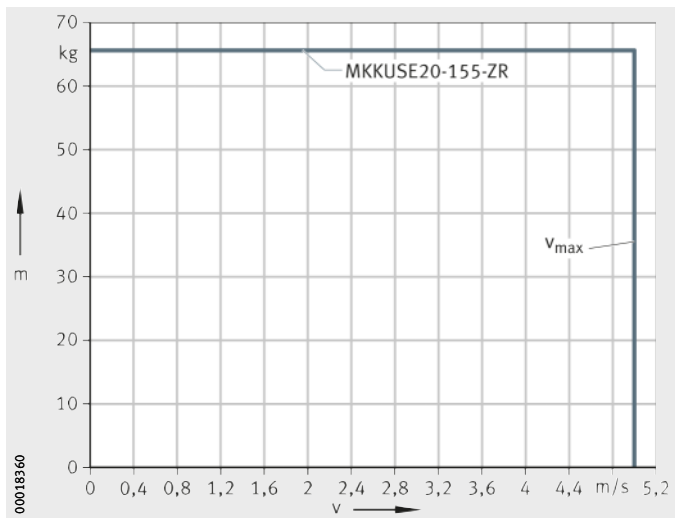

MKKUSE20-155-ZR

v = velocity
m = mass
v_{max} = maximum permissible velocity

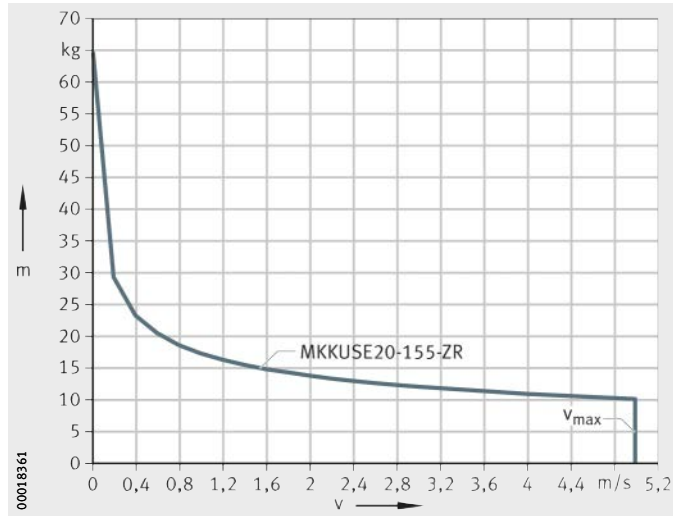

Figure 24
Mass/velocity diagram
Vertical mounting position

Actuators with monorail guidance system and ball screw drive

MKUVE15..-KGT

v = velocity
m = mass
v_{max} = maximum permissible velocity
P = pitch

Figure 25
Mass/velocity diagram
Horizontal mounting position

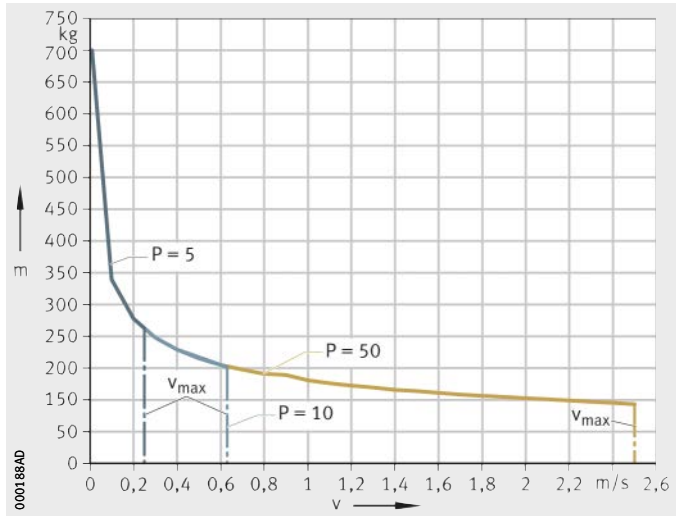

MKUVE15..-KGT

v = velocity
m = mass
v_{max} = maximum permissible velocity
P = pitch

Figure 26
Mass/velocity diagram
Vertical mounting position

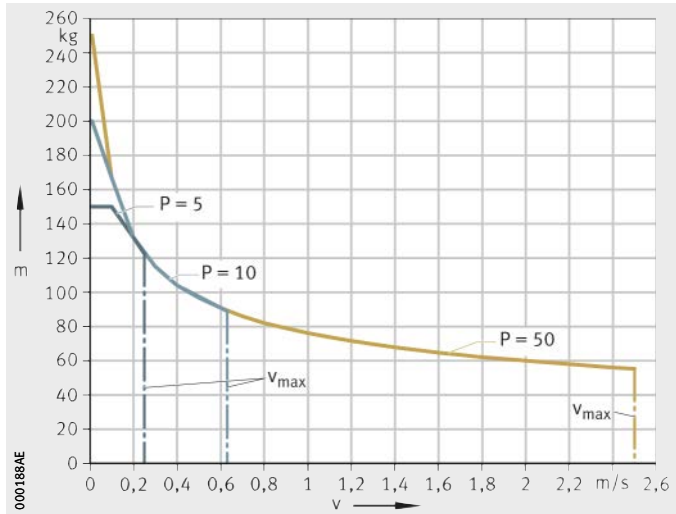

MKUVE20..-KGT

v = velocity
m = mass
v_{max} = maximum permissible velocity
P = pitch

Figure 27
Mass/velocity diagram
Horizontal mounting position

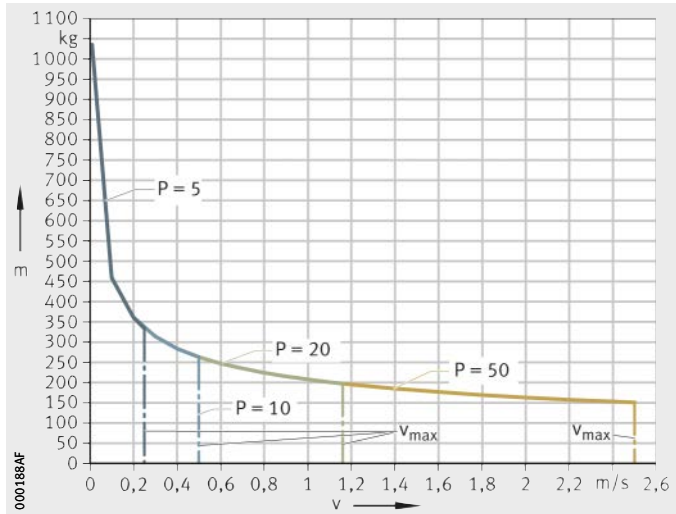

MKUVE20..-KGT

v = velocity
m = mass
v_{max} = maximum permissible velocity
P = pitch

Figure 28
Mass/velocity diagram
Vertical mounting position

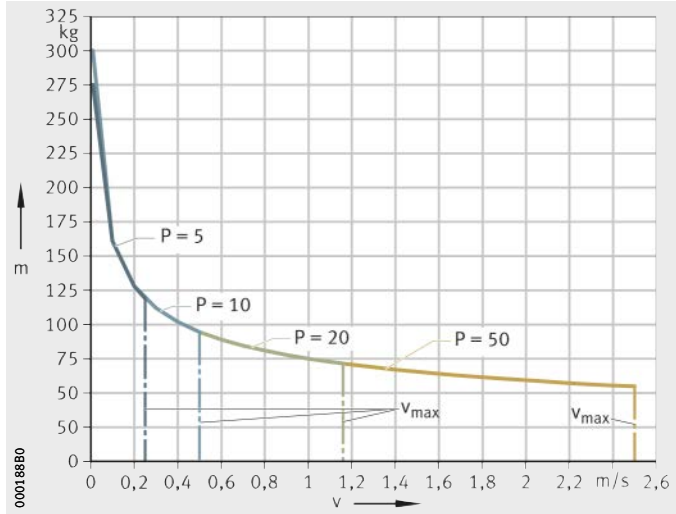

MKUSE25..-KGT

v = velocity
m = mass
v_{max} = maximum permissible velocity
P = pitch

Figure 29
Mass/velocity diagram
Horizontal mounting position

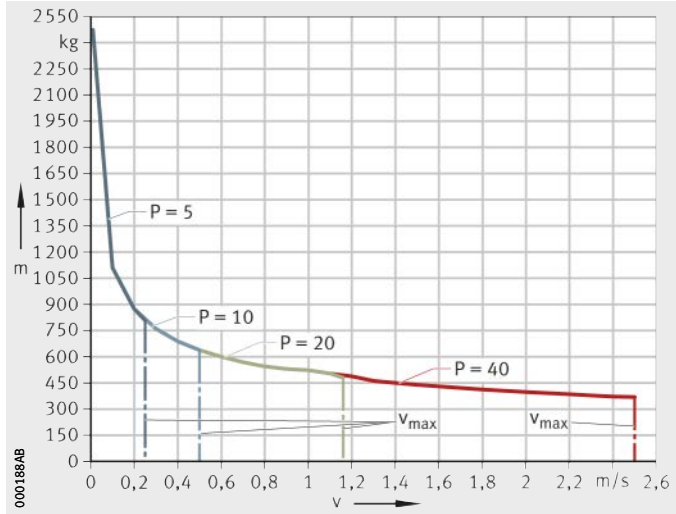

MKUSE25..-KGT

v = velocity
m = mass
v_{max} = maximum permissible velocity
P = pitch

Figure 30
Mass/velocity diagram
Vertical mounting position

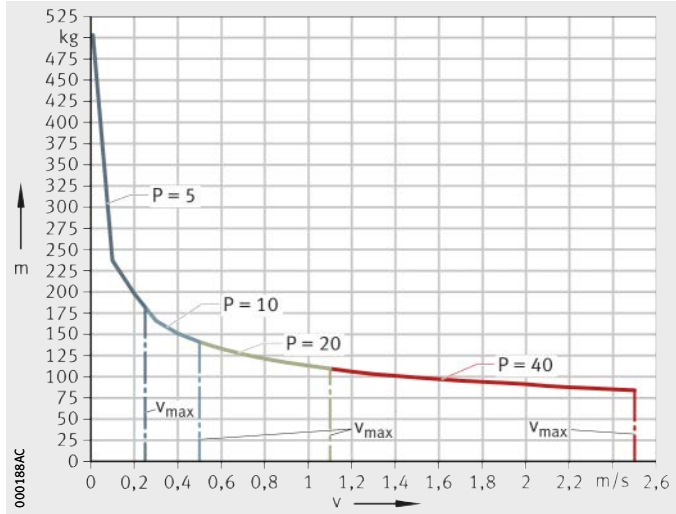

MDKUVE15..-KGT

v = velocity
m = mass
v_{max} = maximum permissible velocity
P = pitch

Figure 31
Mass/velocity diagram
Horizontal mounting position

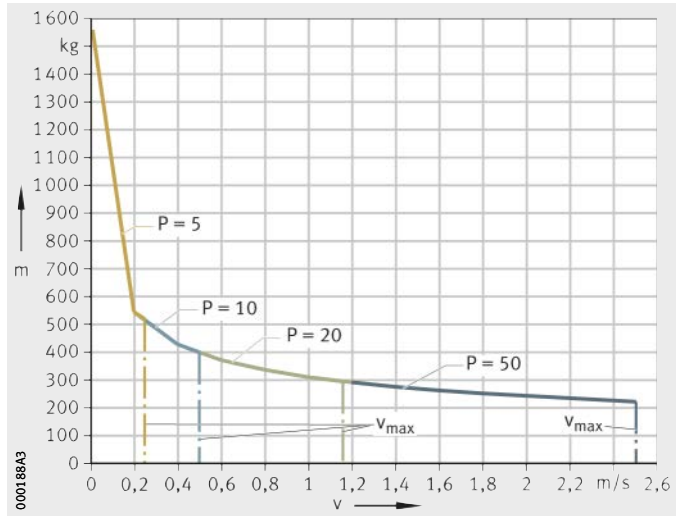

MDKUVE15-240-KGT

v = velocity
m = mass
v_{max} = maximum permissible velocity
P = pitch

Figure 32
Mass/velocity diagram
Vertical mounting position

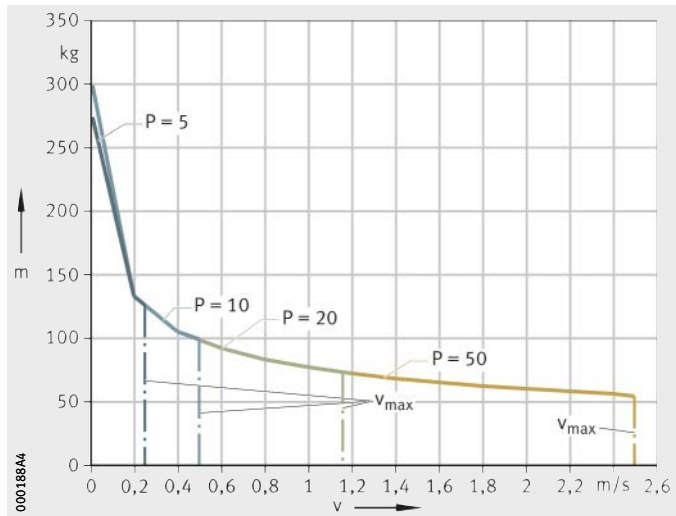

MDKUVE25..-KGT

v = velocity
m = mass
v_{max} = maximum permissible velocity
P = pitch

Figure 33
Mass/velocity diagram
Horizontal mounting position

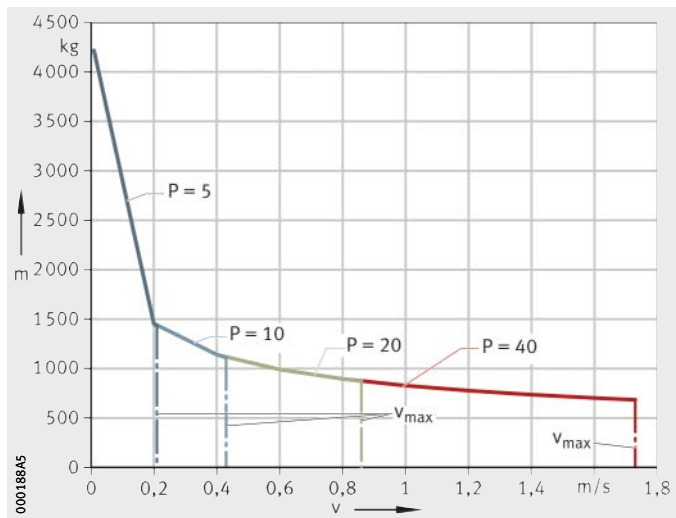

MDKUVE25..-KGT

v = velocity
m = mass
v_{max} = maximum permissible velocity
P = pitch

Figure 34
Mass/velocity diagram
Vertical mounting position

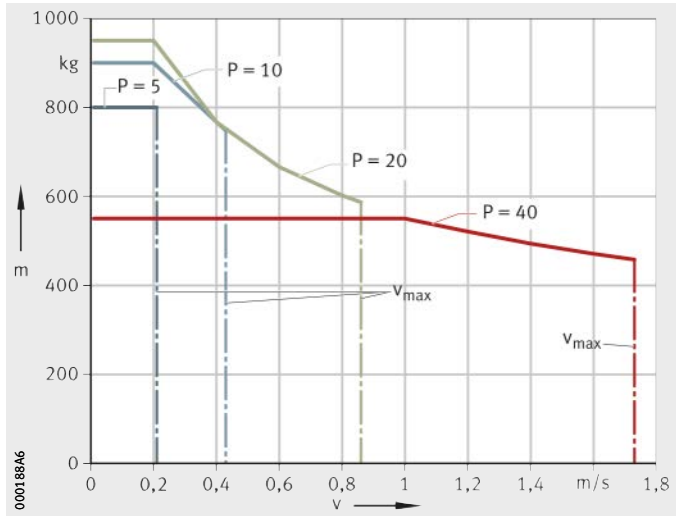

MDKUSE25..-KGT

v = velocity
m = mass
v_{max} = maximum permissible velocity
P = pitch

Figure 35
Mass/velocity diagram
Horizontal mounting position

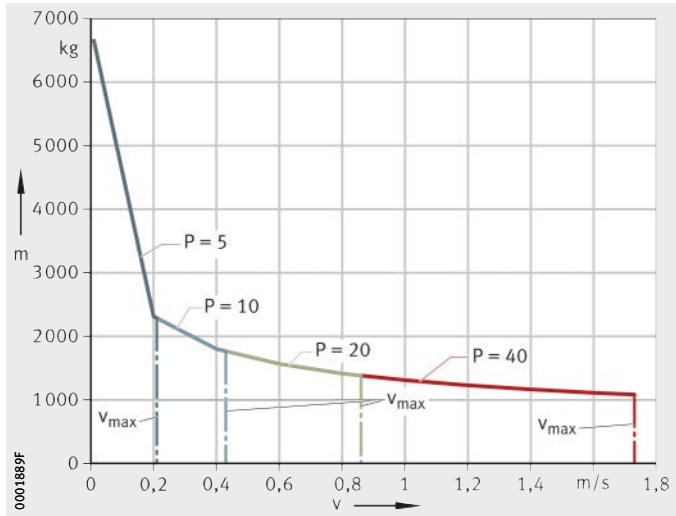

MDKUSE25..-KGT

v = velocity
m = mass
v_{max} = maximum permissible velocity
P = pitch

Figure 36
Mass/velocity diagram
Vertical mounting position

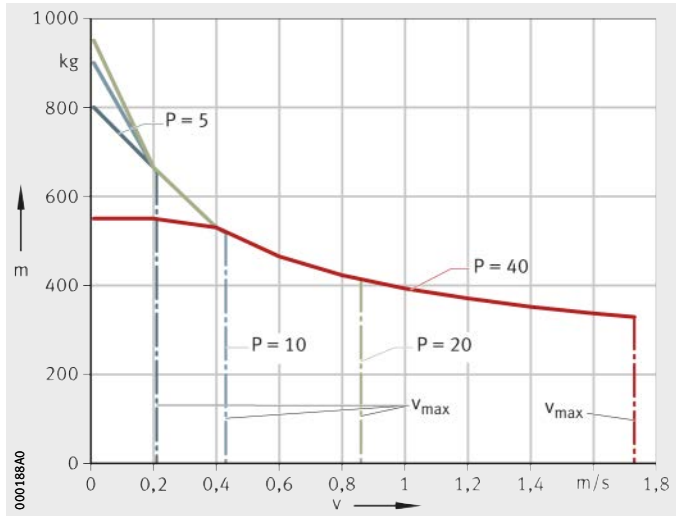

MDKUSE35..-KGT

v = velocity
m = mass
v_{max} = maximum permissible velocity
P = pitch

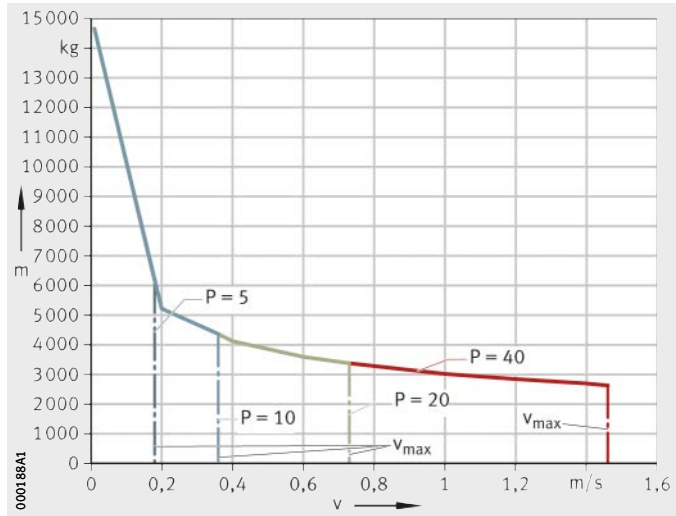

Figure 37
Mass/velocity diagram
Horizontal mounting position

MDKUSE35..-KGT

v = velocity
m = mass
v_{max} = maximum permissible velocity
P = pitch

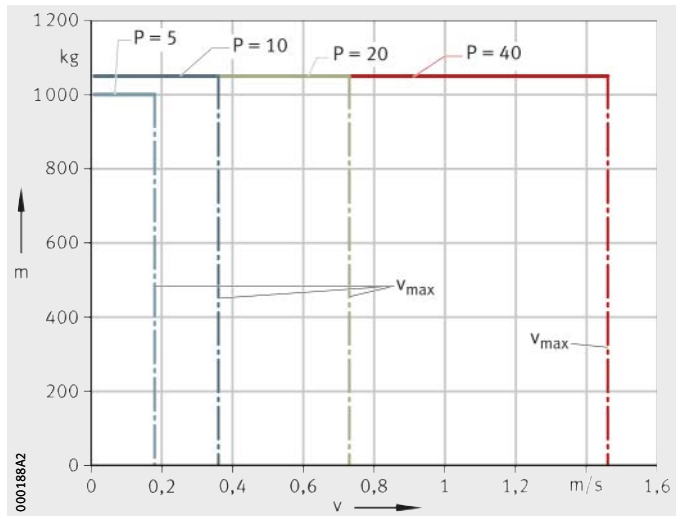

Figure 38
Mass/velocity diagram
Vertical mounting position

MTKUSE25..-ZS

v = velocity
m = mass
v_{max} = maximum permissible velocity

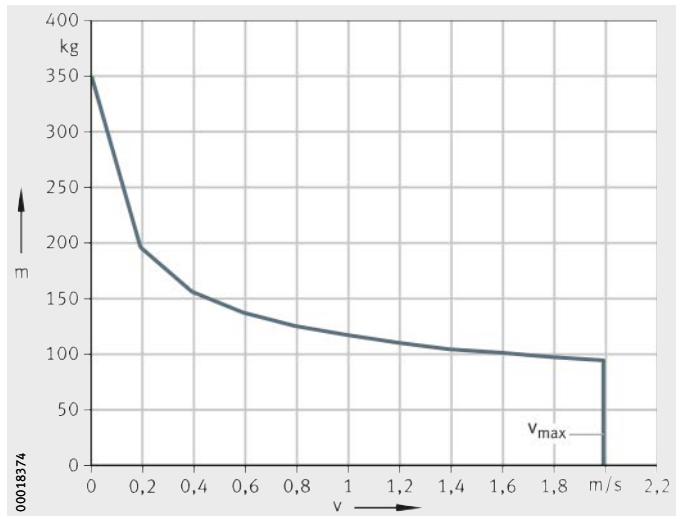

Figure 39
Mass/velocity diagram
Horizontal mounting position

Compact actuators with monorail guidance system and ball screw drive

MKUVS32..-KGT

v = velocity
m = mass
v_{max} = maximum permissible velocity

Figure 40
Mass/velocity diagram
Horizontal mounting position

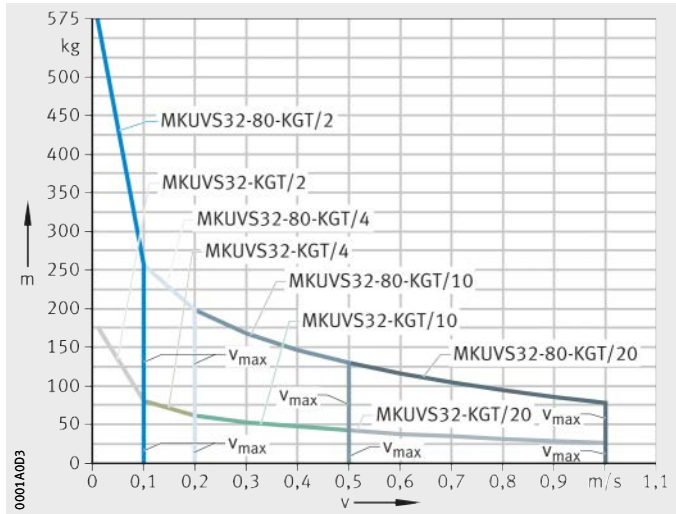

MKUVS32..-KGT

v = velocity
m = mass
v_{max} = maximum permissible velocity

Figure 41
Mass/velocity diagram
Vertical mounting position

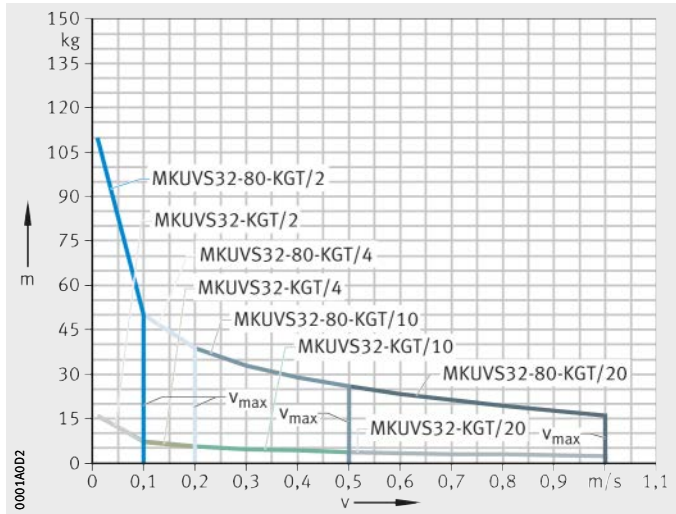

MSDKUVE15..-KGT

v = velocity
m = mass
v_{max} = maximum permissible velocity

Figure 42
Mass/velocity diagram
Horizontal mounting position

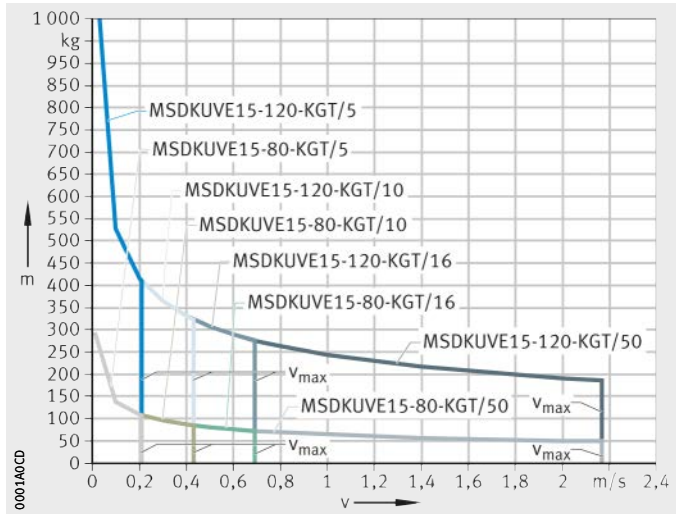

MSDKUVE15..-KGT

v = velocity
m = mass
v_{max} = maximum permissible velocity

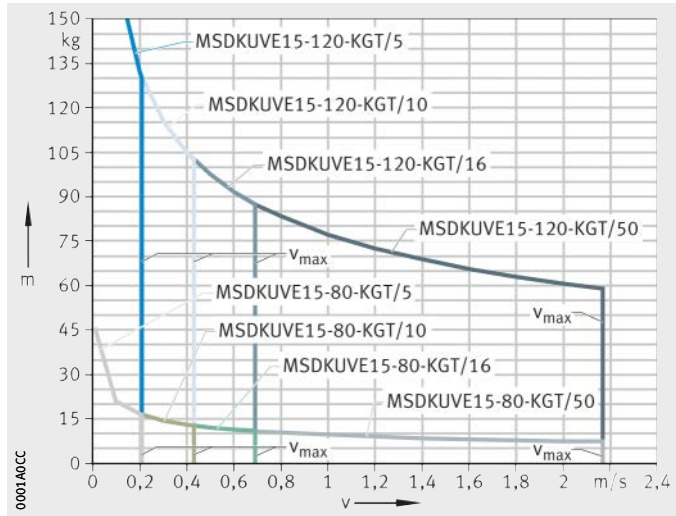

Figure 43
Mass/velocity diagram
Vertical mounting position

Linear tables with open shaft guidance system and without drive

LTS12
LTS16
LTS20

v = velocity
m = mass
v_{max} = maximum permissible velocity

Figure 44
Mass/velocity diagram
Horizontal mounting position

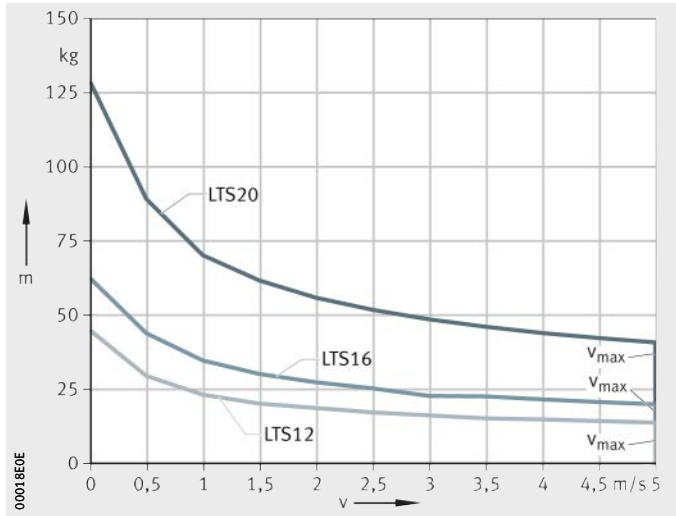

LTS12
LTS16
LTS20

v = velocity
m = mass
v_{max} = maximum permissible velocity

Figure 45
Mass/velocity diagram
Vertical mounting position

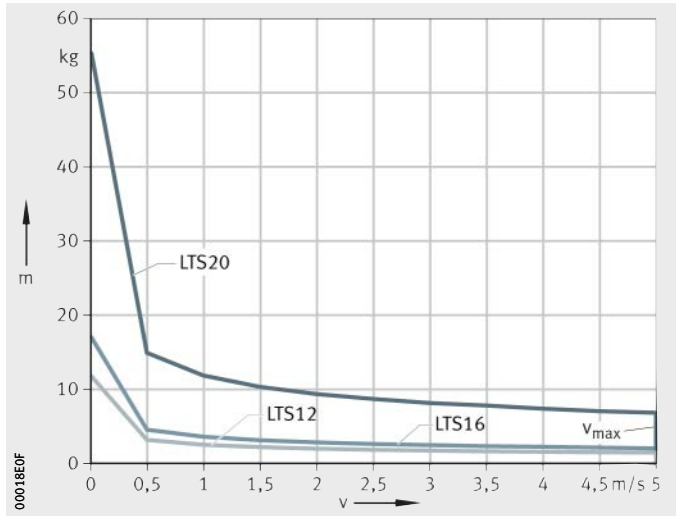

LTS25
LTS30
LTS40
LTS50

v = velocity
m = mass
v_{max} = maximum permissible velocity

Figure 46
Mass/velocity diagram
Horizontal mounting position

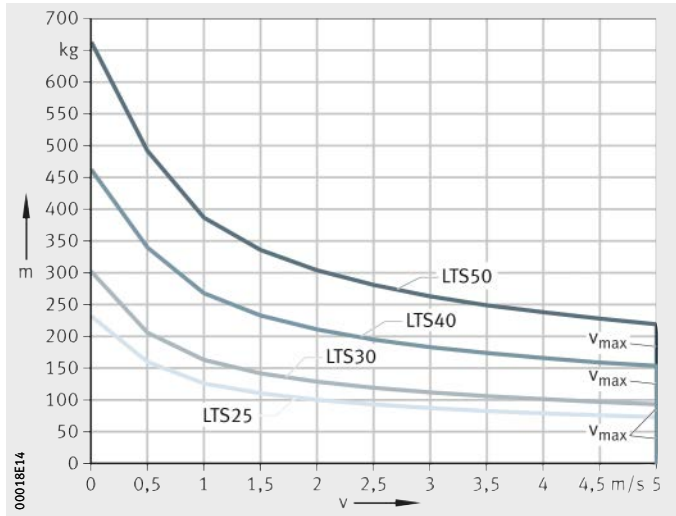

LTS25
LTS30
LTS40
LTS50

v = velocity
m = mass
v_{max} = maximum permissible velocity

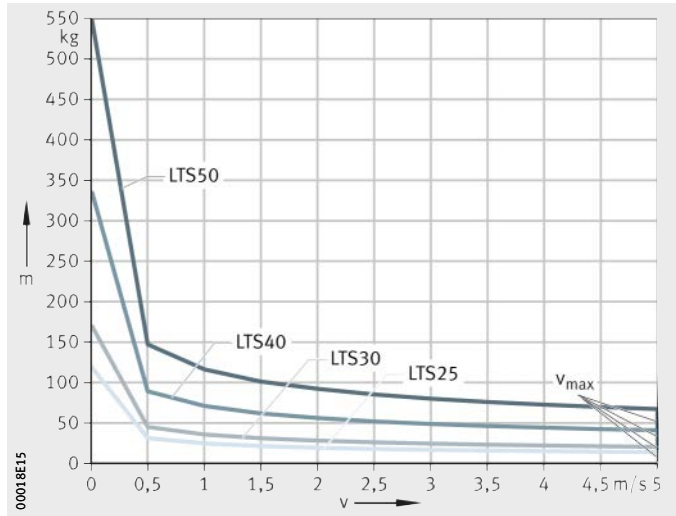

Figure 47
Mass/velocity diagram
Vertical mounting position

Linear tables with open shaft guidance system and ball screw drive

LTS16-12
LTS20-16

v = velocity
m = mass
v_{max} = maximum permissible velocity

Figure 48
Mass/velocity diagram
Horizontal mounting position

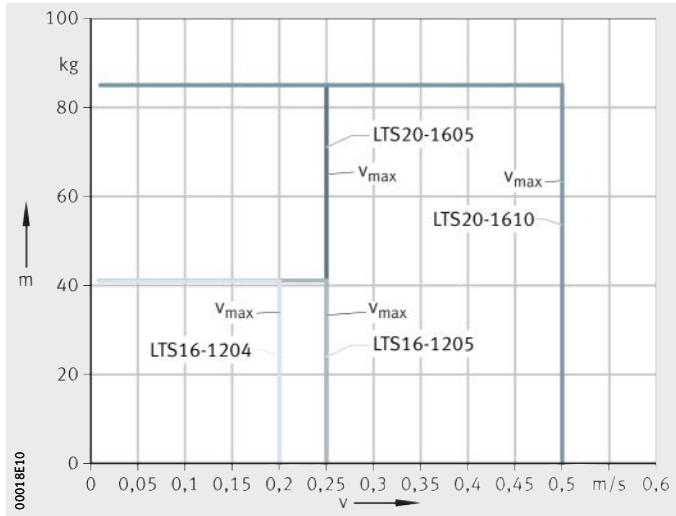

LTS16-12
LTS20-16

v = velocity
m = mass
v_{max} = maximum permissible velocity

Figure 49
Mass/velocity diagram
Vertical mounting position

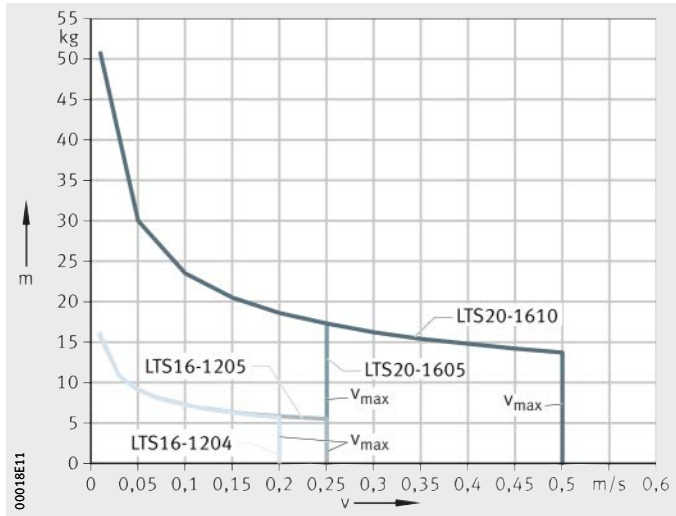

LTS25-16
LTS30-20

v = velocity
m = mass
v_{max} = maximum permissible velocity

Figure 50
Mass/velocity diagram
Horizontal mounting position

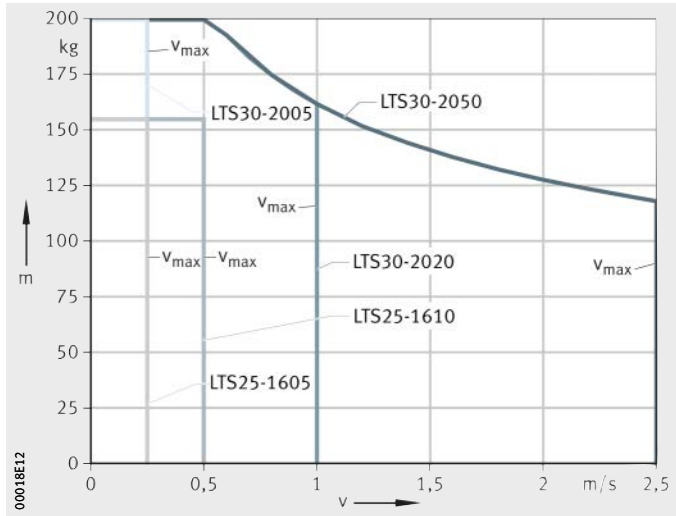

LTS25-16
LTS30-20

v = velocity
m = mass
v_{max} = maximum permissible velocity

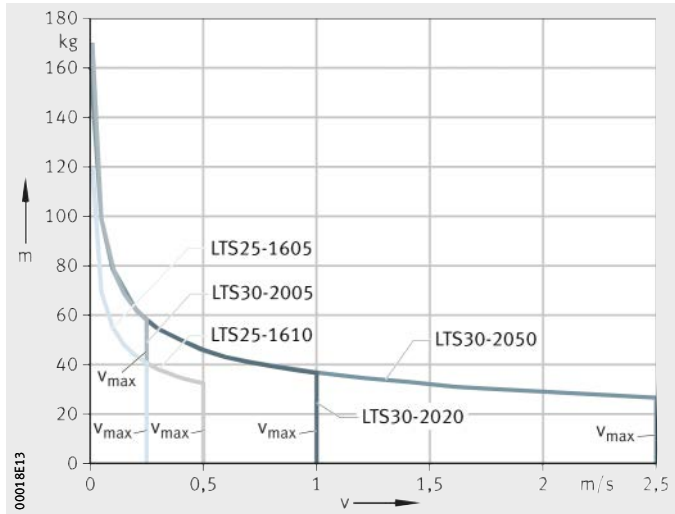

Figure 51
Mass/velocity diagram
Vertical mounting position

LTS40-25
LTS40-32
LTS50-20
LTS50-32

v = velocity
m = mass
v_{max} = maximum permissible velocity

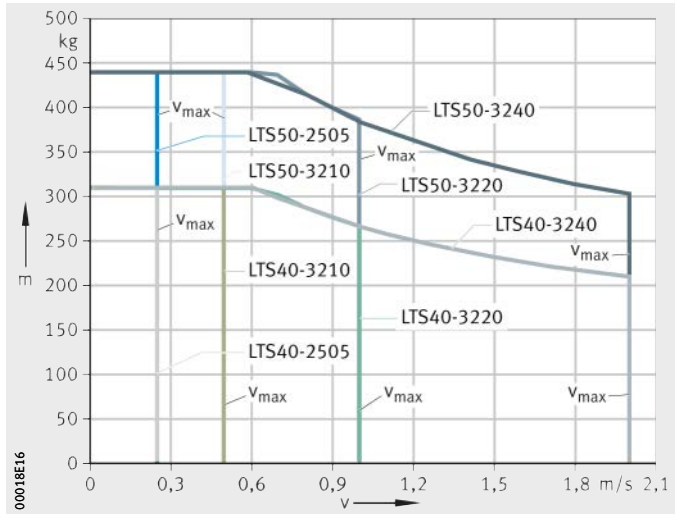

Figure 52
Mass/velocity diagram
Horizontal mounting position

LTS40-25
LTS40-32
LTS50-25
LTS50-32

v = velocity
m = mass
v_{max} = maximum permissible velocity

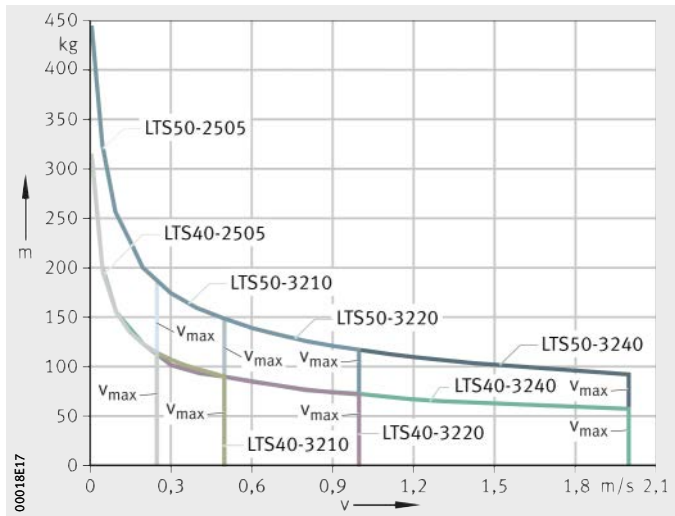

Figure 53
Mass/velocity diagram
Vertical mounting position

Linear tables with open shaft guidance system and trapezoidal screw drive

LTS..-TGT

v = velocity
m = mass
v_{max} = maximum permissible velocity

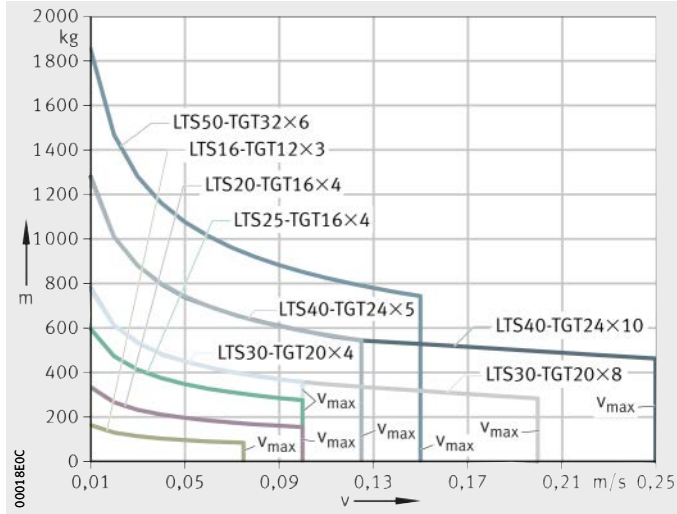

Figure 54
Mass/velocity diagram
Horizontal mounting position

LTS..-TGT

v = velocity
m = mass
v_{max} = maximum permissible velocity

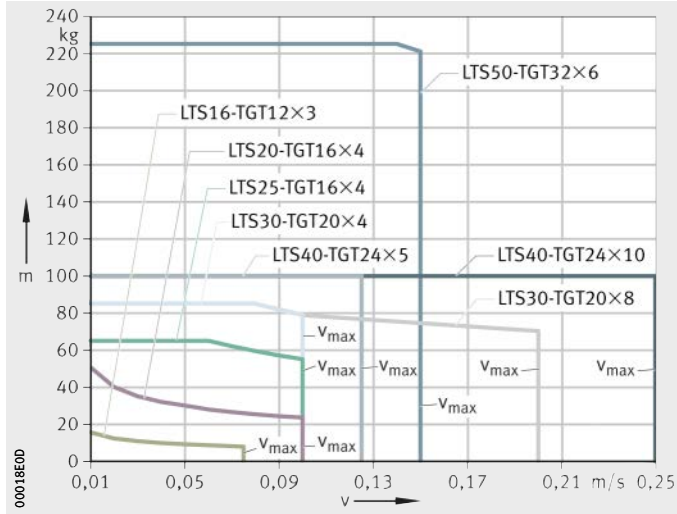

Figure 55
Mass/velocity diagram
Vertical mounting position

High precision linear tables with linear recirculating ball bearing and guideway assemblies and ball screw drive

LTP15
LTPG15

v = velocity
m = mass
v_{max} = maximum permissible velocity

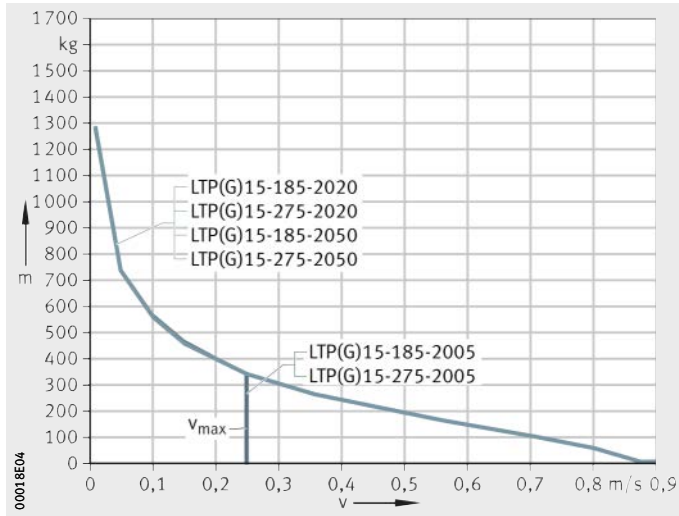

Figure 56
Mass/velocity diagram
Horizontal mounting position

LTP15
LTPG15

v = velocity
m = mass
v_{max} = maximum permissible velocity

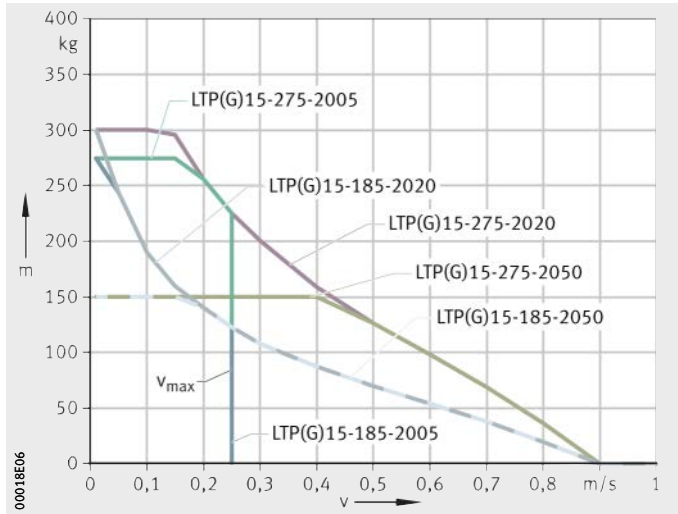

Figure 57
Mass/velocity diagram
Vertical mounting position

LTP25
LTPG25

v = velocity
m = mass
v_{max} = maximum permissible velocity

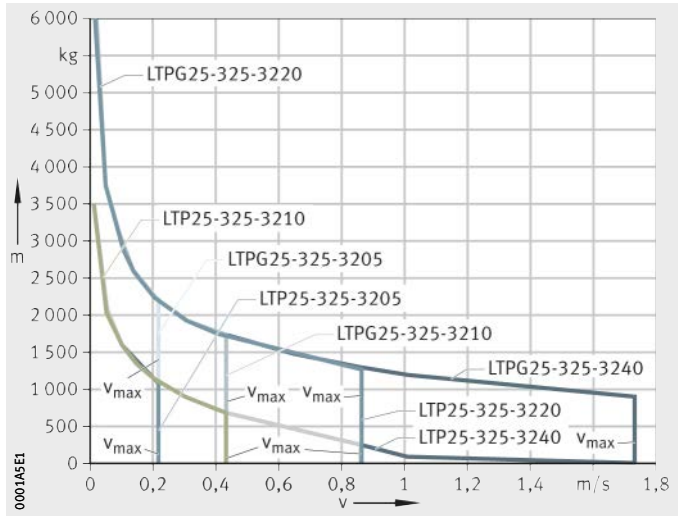

Figure 58
Mass/velocity diagram
Horizontal mounting position

LTP25
LTPG25

v = velocity
m = mass
v_{max} = maximum permissible velocity

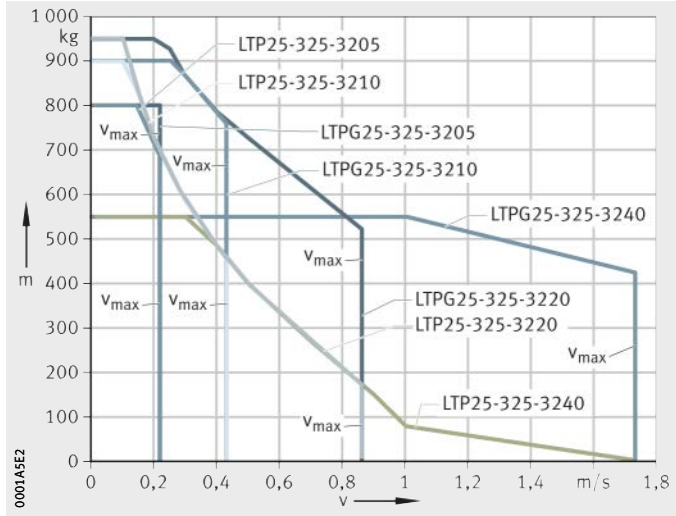

Figure 59
Mass/velocity diagram
Vertical mounting position

Dimensioning of linear actuators

The performance capacity of a driven linear unit is essentially determined by the bearings, guidance systems and drive elements used.

The required size of these elements is dependent on the following requirements:

- rating life
- load carrying capacity
- operational reliability.

As a result of the complex interaction of the bearings, guidance systems and drive elements, it is advisable in practice to use manual calculation for preselection only. Precise calculation should be carried out using software from the BEARINX® range.

Monorail guidance systems in driven linear units

The size of a monorail guidance system is determined by the demands made on its load carrying capacity, rating life and operational reliability.

Load carrying capacity

The load carrying capacity is described in terms of the basic dynamic load rating C, the basic static load rating C_0 and the static moment ratings M_{0x}, M_{0y} and M_{0z}, *Figure 1*.

The basic dynamic load rating is the load in N at which the guidance system achieves a distance of 100 km at a survival probability of 90% (C_{100}).

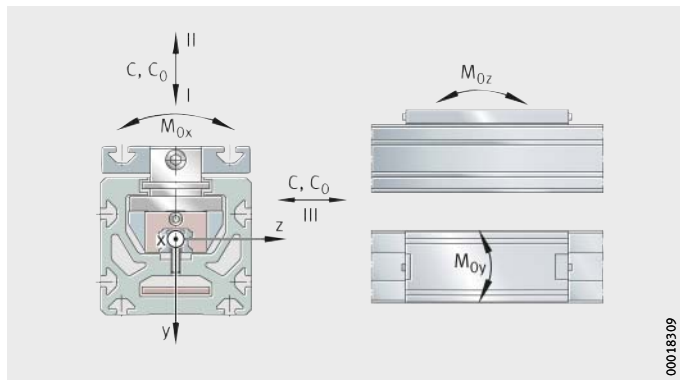

Figure 1
Load carrying capacity and load direction

Calculation of basic load ratings according to DIN

The calculation of the basic dynamic and static load ratings for each carriage in the dimension tables is based on DIN 636-1 and 2.

Differences between DIN and suppliers from the Far East

Suppliers from the Far East frequently calculate basic load ratings using a basic rating life based on a distance of only 50 km compared with 100 km to DIN.

Linear recirculating ball bearing and guideway assemblies

$$C_{50} = \mathbf{1,26} \cdot C_{100}$$

$$C_{100} = \mathbf{0,79} \cdot C_{50}$$

C_{50} N
Basic dynamic load rating C for a distance of 50 km

C_{100} N
Basic dynamic load rating C for a distance of 100 km – definition according to DIN 636.

Basic rating life

The basic rating life L or L_h is achieved or exceeded by 90% of a sufficiently large group of apparently identical bearings before the first evidence of material fatigue occurs.

$$L = \left(\frac{C}{P}\right)^3$$

$$L_h = \frac{833}{H \cdot n_{osc}} \cdot \left(\frac{C}{P}\right)^3$$

$$L_h = \frac{1666}{\bar{v}} \cdot \left(\frac{C}{P}\right)^3$$

Equivalent load and speed

The equations for calculating the basic rating life are based on the assumption that the load P and travel velocity $\bar{v}$ are constant. Non-constant operating conditions can be taken into consideration by means of equivalent operating values. These have the same effect as the loads occurring in practice.

Equivalent dynamic load

Where the load varies in steps, the equivalent dynamic load is calculated as follows:

$$P = \sqrt[3]{\frac{q_1 \cdot n_1 \cdot F_1^{\,3} + q_2 \cdot n_2 \cdot F_2^{\,3} + \ldots + q_Z \cdot n_Z \cdot F_Z^{\,3}}{q_1 \cdot n_1 + q_2 \cdot n_2 + \ldots + q_Z \cdot n_Z}}$$

Equivalent dynamic travel velocity

Where the travel velocity varies in steps, the equivalent dynamic travel velocity is calculated as follows:

$$\bar{v} = \frac{q_1 \cdot v_1 + q_2 \cdot v_2 + \ldots + q_z \cdot v_z}{100}$$

Combined load

If the direction of the load acting on an element does not coincide with one of the main load directions, an approximate value for the equivalent load is calculated as follows:

$$P = |F_y| + |F_z|$$

If an element is simultaneously subjected to a force F and a moment M, an approximate value for the equivalent dynamic load is calculated as follows:

$$P = |F| + |M| \cdot \frac{C_0}{M_0}$$

Symbols, units and definitions

C N
Basic static load rating in the direction of the force acting on the element

C_0 N
Basic static load rating in the direction of the force acting on the element

F N
Force acting on the element

F_y N
Vertical component

F_z N
Horizontal component

H m
Single stroke length for reciprocating motion

L, L_h km, h
Basic rating life in 100 km or in operating hours

M Nm
Moment acting on the element

M_0 Nm
Static moment rating

n_{osc} min^{-1}
Number of return strokes per minute

P N
Equivalent dynamic load

p –
Life exponent:
monorail guidance systems based on balls = 3

q_z %
Duration as a proportion of the total operating time

v_z m/min
Variable travel velocity

$\bar{v}$ m/min
Equivalent dynamic travel velocity.

Operating life

The operating life is the life actually achieved by a rolling bearing or a monorail guidance system. It may differ significantly from the calculated life.

The following influences can lead to premature failure through wear or fatigue:

- deviations in the operating data
- excess load due to misalignment as a result of temperature differences and manufacturing tolerances in the adjacent construction (elasticity of the adjacent construction)
- contamination of the guidance systems
- inadequate lubrication
- operating temperature too high or too low
- reciprocating motion with very small stroke length (false brinelling)
- vibration during stoppage (false brinelling)
- overloading of the guidance system, for example by shock loads (even for short periods)
- overloading of the linear table (even for short periods)
- impermissible shaft deflection in linear tables LTP
- preliminary damage (plastic deformation) occurring during assembly of the adjacent construction.

Static load carrying capacity

The static load carrying capacity of the monorail guidance system incorporated in driven linear units is limited by:

- the permissible load on the monorail guidance system
- the load carrying capacity of the guideway
- the mounting position
- the permissible load on the screw connections
- the permissible load on the adjacent construction.

For design purposes, the static load safety factor S_0 required for the application must be observed, see tables starting page 51.

Basic static load ratings and moment ratings

The basic static load ratings and static moment ratings are those loads under which the raceways and rolling elements undergo a permanent overall deformation corresponding to $^1/_{10\,000}$ of the rolling element diameter.

Static load safety factor

The static load safety factor S_0 is the security against impermissible permanent deformation at the rolling contact:

$$S_0 = \frac{C_0}{P_0}$$

$$S_0 = \frac{M_0}{M}$$

S_0 –
Static load safety factor
C_0 N
Basic static load rating in the load direction
P_0 N
Equivalent static bearing load in the load direction
M_0 Nm
Static moment rating in the load direction (M_{0x}, M_{0y}, M_{0z})
M Nm
Equivalent static moment in the load direction.

The equivalent static bearing load is determined in approximate terms from the maximum loads occurring:

$$P_0 = F_{max}$$

$$M_0 = M_{max}$$

Static load safety factor S_0 for the design of linear guidance systems, see tables, page 51.

Track roller guidance systems

The general methods for calculating the rating life are:

- the basic rating life according to DIN ISO 281
- the adjusted rating life according to DIN ISO 281
- the expanded calculation of the adjusted reference rating life according to DIN ISO 281-4.

These methods are described in Catalogue HR1, Rolling Bearings, in the chapter Load carrying capacity and life.

Rating life of track rollers

The carriages of series MLF, MLFI and MLFK are fitted with four profiled track rollers or in some sizes with three profiled track rollers.

The track rollers are subject to the corresponding principle.
The corresponding parameters are taken into consideration in the basic load ratings C, C_0 and the permissible moment ratings M_{0x}, M_{0y} and M_{0z}, *Figure 2*.

C_I N
Basic dynamic load rating in the y (compressive) direction

C_{0I} N
Basic static load rating in the y (compressive) direction

C_{II} N
Basic dynamic load rating in the y (tensile) direction

C_{0II} N
Basic static load rating in the y (tensile) direction

C_{III} N
Basic dynamic load rating in the z (lateral) direction

C_{0III} N
Basic static load rating in the z (lateral) direction

M_{0x} Nm
Static moment rating about the X axis

M_{0y} Nm
Static moment rating about the Y axis

M_{0z} Nm
Static moment rating about the Z axis.

In the case of track rollers with a profiled outer ring, calculation is carried out exclusively by means of the basic rating life according to DIN ISO 281.

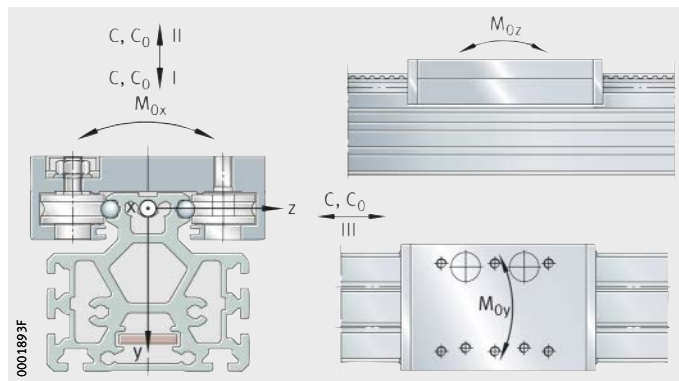

Figure 2
Load carrying capacity and load directions

Rating life for carriages with four track rollers

$$L_h = \frac{833}{H \cdot n_{osc}} \cdot \left(\frac{C_I, C_{II}, C_{III}}{P} \right)^3$$

L_h h
Basic rating life in operating hours

C_I, C_{II}, C_{III} N
Effective dynamic load rating

H m
Single stroke length for reciprocating motion

n_{osc} min^{-1}
Number of return strokes per minute

P N
Equivalent dynamic load in the corresponding load direction
(for applications with combined loads, please contact us).

Static load safety factor

The indicator of static loading is the static load safety factor S_0. It indicates the security with regard to permissible permanent deformation of the bearing.

Static load safety factor for carriages with four track rollers

$$S_0 = \frac{C_0}{P_0}$$

$$S_0 = \frac{M_0}{M}$$

S_0 N
Static load safety factor

C_0 N
Basic static load rating in the load direction
according to the dimension table

P_0 N
Equivalent static bearing load in the load direction

M_0 Nm
Permissible static moment in the x, y and z direction
according to the dimension table

M Nm
Equivalent static moment rating in the load direction (M_x, M_y, M_z).

Minimum load safety factors for actuators with track roller guidance systems, see tables, page 51.

Linear tables with linear ball bearings

The size of a linear table is determined by the requirements made on its load carrying capacity, rating life and operational reliability.

The load carrying capacity is described in terms of:

- the basic dynamic load rating C
- the basic static load rating C_0.

The calculation of the basic dynamic and static load ratings in the dimension tables is based on DIN 636-1.

The carriages in linear tables with linear ball bearings are each fitted with four linear ball bearings, *Figure 3*.
The calculation equations for these correspond to the equations for individual bearings. The corresponding parameters are taken into consideration in the basic load ratings of the linear tables C_I, C_{II} and C_{III}, or C_{0I}, C_{0II} and C_{0III}, and the moment ratings M_{0x}, M_{0y} and M_{0z}.

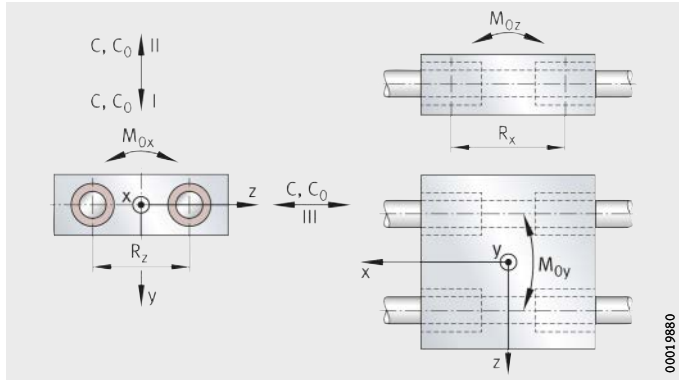

Figure 3
Load carrying capacity and load directions

Static load carrying capacity

The static load carrying capacity of the shaft guidance systems fitted in the linear tables LTE and LTS is restricted by:

- the permissible load on the linear ball bearings
- the permissible load on the adjacent construction
- the permissible deflection of the guidance shafts in linear tables LTE
- the load carrying capacity of the shaft and support rail units (aluminium support rail with screw mounted guidance shaft) in linear tables LTS
- the mounting position.

For design purposes, the static load safety factor S_0 required for the application must be observed, see tables, page 51.

Basic static load ratings and moment ratings

The basic static load ratings and static moment ratings are those loads under which the raceways and rolling elements undergo a permanent overall deformation corresponding to $^{1}/_{10\,000}$ of the rolling element diameter.

Static load safety factor

The static load safety factor S_0 is the security against permanent deformation at the rolling contact:

$$S_0 = \frac{C_0}{P_0}$$

$$S_0 = \frac{M_0}{M}$$

S_0 –
Static load safety factor

C_0 N
Basic static load rating in the load direction C_{0I}, C_{0II}, C_{0III})
according to dimension tables

P_0 N
Equivalent static bearing load in the load direction

M_0 Nm
Basic static moment rating in the load direction (M_{0x}, M_{0y}, M_{0z})
according to dimension tables

M Nm
Equivalent static moment in the load direction.

The equivalent static bearing load is determined in approximate terms from the maximum loads occurring:

$$P_0 = F_{max}$$

$$M_0 = M_{max}$$

Static load safety factor S_0 for design of linear guidance systems, see tables starting page 51.

Bearing arrangement in return units for toothed belts

The bearing arrangements in the return shaft units of actuators are dimensioned such that their operating life exceeds the operating life of the guidance systems fitted in the actuator.

For this reason, checking of the load carrying capacity and rating life of the return shaft units is only necessary in exceptional cases, such as increased preload of the toothed belt and high loads on the toothed belt.

In such cases, please contact the Schaeffler engineering service.

Support bearings for ball screw drives

Actuators and linear tables with ball screw drive are fitted on the locating bearing side with double row axial angular contact ball bearings of series ZKLF..-2RS(-PE) or axial angular contact ball bearings of series ZKLN..-2RS(-PE). Linear tables with trapezoidal screw drive are fitted with single or double row angular contact ball bearings of series 30, 33 and 72.

Basic rating life of the locating bearing arrangement

The decisive factors in determining the suitability of the linear unit for the specific application are the basic rating life, the static load safety factor and the axial limiting load of the locating bearing arrangement.

The basic rating life is calculated as follows:

$$L = \left(\frac{C_a}{P}\right)^3$$

$$L_h = \left(\frac{16\,666}{n}\right)\left(\frac{C_a}{P}\right)^3$$

L 10^6 revolutions
Basic rating life in millions of revolutions

C_a N
Equivalent dynamic bearing load

P N
Equivalent dynamic bearing load

L_h h
Basic rating life in operating hours

n min^{-1}
Operating speed.

Needle roller bearings or ball bearings are used in the non-locating bearing arrangement of the screw drive. These are adequately dimensioned such that, with correct usage, their operating life exceeds the operating life of the ball screw drive.

Resultant equivalent bearing load P for ZKLN and ZKLF

The axial angular contact ball bearings of series ZKLN and ZKLF fitted in actuators and linear tables have a defined axial preload. The resultant bearing load $F_{a\ res}$ must be determined from the axial operating load F_{aB} taking account of the axial preload, *Figure 4* and *Figure 5*.

If the load exceeds the limit values, the rolling element row without load will lift off the raceway. As a result, higher wear will occur under rapid acceleration. The calculation program BEARINX® can give a precise design in this case.

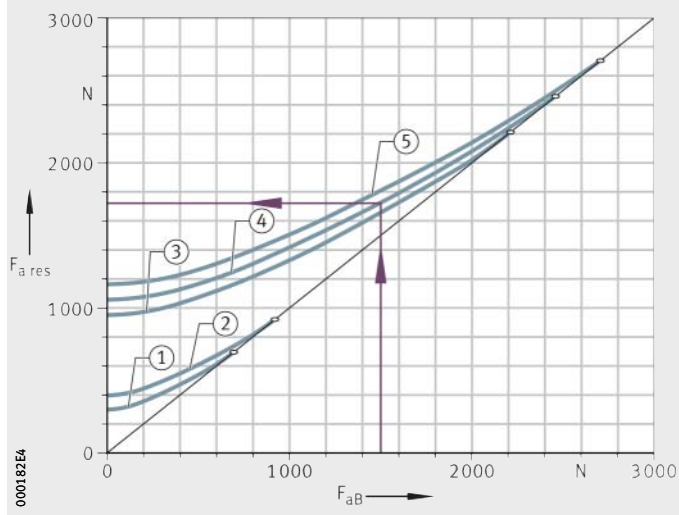

① ZKLN0624
② ZKLN1034
③ ZKLN1242
④ ZKLN1545
ZKLF1560
⑤ ZKLN1747

Figure 4
Resultant bearing load ZKLN and ZKLF up to d = 17 mm

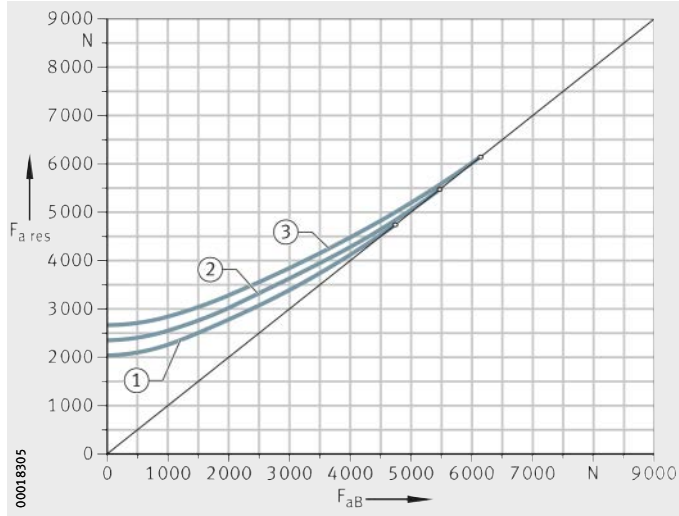

① ZKLN2052
② ZKLF2575
③ ZKLF3080

Figure 5
Resultant bearing load ZKLN and ZKLF from d = 20 mm to d = 30 mm

Axial and radial operating loads

If the linear unit is mounted as a vertical axis, this gives an equivalent dynamic bearing load $P = F_{a\,res}$. If it is mounted horizontally, the screw drive bearing arrangement is subjected to an additional load due to the inherent mass of the spindle. For the purposes of approximate calculation, this can be disregarded.

Load varying in steps

If the load values vary in steps, the equivalent load P and speed n are calculated as follows:

$$P = \sqrt[3]{\frac{q_1 \cdot n_1 \cdot P_1^3 + \ldots + q_z \cdot n_z \cdot P_z^3}{q_1 \cdot n_1 + \ldots + q_z \cdot n_z}}$$

$$n = \frac{q_1 \cdot n_1 + \ldots + q_z \cdot n_z}{100}$$

q %
Time period.

Static load safety factor

The static load safety factor S_0 indicates the security against impermissible permanent deformations in the bearing.

In the case of driven linear units with ball screw drive, it is calculated as follows, see equation:

$$S_0 = \frac{C_{0a}}{P_0}$$

S_0 –
Static load safety factor
C_{0a} N
Basic static axial load rating, see dimension tables
P_0 N
Maximum static axial load of bearing.

Permissible static axial load for ZKLF

For bearings of series ZKLF fitted in driven linear units with ball screw drive, the static axial load in the direction of the screw connections is shown in *Figure 6*.

$$P_{0\,per} \leq \frac{C_{0a}}{4}$$

Basic static load rating C_{0a}, see dimension tables.

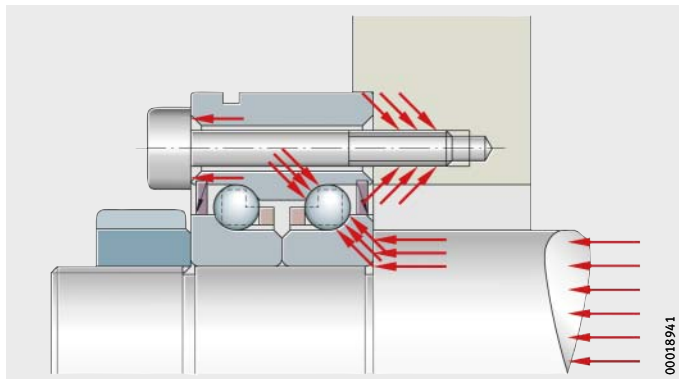

ZKLF

Figure 6
Static axial load in the direction of the screw connections

Application-oriented static load safety factor

The static load safety factor of monorail and track roller guidance systems in actuators must not be utilised to its full extent.
At all times, a minimum load safety factor S_0 must be observed, see tables, page 51.

In the case of actuators and linear tables with monorail guidance system, guidance systems with high load carrying capacity and rigidity are combined with adjacent parts made from aluminium. Since these adjacent parts are made from aluminium section or aluminium plates, the static load carrying capacity of the monorail guidance systems cannot be used to its full extent since this is only partially permitted by the screw connections.

Furthermore, geometrical inaccuracies of the aluminium parts, alignment defects in multi-axis arrangements and deformations due to load in mounting with unsupported lengths must be taken into consideration. Since it is difficult to specify these influences, minimum load safety factors determined by the application and specific to the product must be taken into consideration in the design, see tables, page 51.

Even in the case of actuators with track roller guidance systems, the load carrying capacity of the track roller guidance systems cannot be used to its full extent. In addition, the full static load carrying capacity of the track rollers cannot be supported, since the bolts in the track roller undergo deformation due to load.

Minimum load safety factor S_0

Type of actuator	Precondition	Minimum load safety factor S_0
Linear actuators and linear tables	Predominantly oscillating load with stationary guidance system	20
	All load parameters are known, a linear unit supports the useful load at both ends, deflection < 0,1% of the support spacing	8
Linear actuators with track roller guidance system and linear tables LTE and LTS	Not all load parameters are known, heavy contamination influence, a linear unit supports the useful load over its complete surface, milled, flat screw mounting surfaces	12
	All load parameters are known, no particular contamination, a linear unit supports the useful load over its complete surface, milled, flat screw mounting surfaces	6
Actuators with monorail guidance systems	Not all load parameters are known, heavy contamination influence, a linear unit supports the useful load over its complete surface, milled, flat screw mounting surfaces	12
	All load parameters are known, smooth, vibration-free running, no particular contamination, a linear unit supports the useful load over its complete surface, milled, flat screw mounting surfaces	4
Linear tables LTP and LTPG	Not all load parameters are known, heavy contamination influence, a linear unit supports the useful load over its complete surface, milled, flat screw mounting surfaces	12
	All load parameters are known, smooth, vibration-free running, a linear unit supports the useful load over its complete surface, no particular contamination, milled, flat screw mounting surfaces	4

Minimum load safety factor S_0
for overhead suspended arrangement

Type of actuator	Precondition[1)]	Minimum load safety factor S_0
Linear actuators and linear tables	Not all load parameters are known, overhead suspended arrangement, fewer than 2 linear units support a coherent mass	20
	Not all load parameters are known, overhead suspended arrangement, at least 2 linear units support a coherent mass or all load parameters are known, overhead suspended arrangement, fewer than 2 linear units support a coherent mass	8 to 12
	All load parameters are known, overhead suspended arrangement, at least 2 linear units support a coherent mass	6 to 8

1) In the case of an overhead suspended arrangement, a drop guard is recommended.

Critical speed of screw drives

Influences on the critical speed

The permissible speed of a trapezoidal or ball screw drive is restricted by the maximum permissible speed of the threaded nut (theoretical upper limit) and the critical speed of the trapezoidal or ball screw spindle. The critical speed of the threaded spindle is dependent on the type of bearing arrangement, the nominal diameter, the support spacing between the support bearings and the number of spindle supports. The critical speed is also influenced by the direction of load on the locating bearings and the tensile or compressive load.

The critical speeds of the trapezoidal or ball screw drive as a function of the actuator length are given in the relevant descriptive chapters. The size and type of the bearing arrangement are already taken into consideration, while the influence of the load direction must be taken into consideration.

Lubrication

General guidelines on lubrication

Lubrication is an important criterion in driven linear units. Lubricants reduce friction, minimise wear, prevent corrosion, protect against contamination and extend the operating life.

Ensuring correct function

The function of a linear unit is dependent on reliable lubrication. The units must therefore be relubricated at appropriate intervals.

The length of the interval is essentially dependent on the travel velocity, load, operating temperature, stroke length and environmental conditions. The cleaner the environment, the smaller the quantity of lubricant consumed.

The shorter the lubrication intervals, the easier it is to justify substantial expenditure on lubrication devices on economic grounds. Where the intervals are long, lubrication by hand or using semi-automatic devices can be advantageous.

Environmental protection

Any lubrication method for driven linear units involves loss of lubricant. The lubricant used must be collected and disposed of by methods that help to protect the environment.

The handling and use of lubricants is governed by national regulations for environmental protection and occupational safety as well as information from the lubricant manufacturers. The regulations must be observed.

Actuators with monorail guidance system

For the lubrication of monorail guidance systems in linear units, grease has proved effective as a lubricant. Oil lubrication is therefore not considered at this point.

Initial greasing

The guidance systems in linear units are initially greased with a high quality lithium complex soap grease KP2P–30 according to DIN 51825 and must be relubricated during operation.

The relubrication intervals are essentially dependent on:

- the carriage travel velocity
- the load
- the operating temperature
- the stroke length
- the environmental conditions and environmental influences
- the mounting position.

Grease lubrication

Greases used in linear units are subject to the following specification:

- lithium soap or lithium complex soap grease with base oil having a mineral oil base
- special anti-wear additives for loads $C_0/P < 8$, indicated by “P” in the DIN designation KP2K–30
- base oil viscosity ISO-VG 68 to ISO-VG 100
- consistency in accordance with NLGI grade 2.

If different greases are used, their miscibility and compatibility must be checked first.

If the quality of the grease differs from the specifications, please consult Schaeffler.

Miscibility

In general, oils with a mineral oil base and with the same classification are miscible with each other. However, the viscosities should not differ by more than one ISO VG grade. The consistencies (NLGI grade) and thickener types must match. In case of doubt, please consult the grease manufacturer.

Relubrication

For relubrication, a lithium soap or lithium complex soap grease should be used that complies with the specifications stated.

In a clean environment, lubrication intervals of more than 10 000 km can be achieved. An observation period of adequate length must be allowed for precise determination of the lubrication interval.

In relubrication, the following must be observed:

- The environment of the lubrication nipple must be clean.
- Lubrication should always be carried out with the linear actuator unit warm from operation.
- Move the carriage during lubrication.
- Relubrication should be carried out wherever possible with several partial quantities at various times instead of the complete quantity at the time of the relubrication interval.

Lubrication nipples

The position of the lubrication nipples for the individual types is given in the descriptive chapters.

Initial greasing

The carriages in actuators with monorail guidance system and toothed belt drive are sealed, have an initial greasing and can be relubricated. The ball bearings fitted in the return units of linear and clamping actuators or the tapered roller bearings in tandem actuators are sealed and lubricated for life.

Calculation of the lubrication interval

Grease operating life

Since it is not possible to calculate all the influencing factors, the precise grease operating life can only be determined under operating conditions.

However, the following approximation equation can be used to determine a guide value for many applications:

$$t_{fG} = t_f \cdot K_P \cdot K_W \cdot K_U$$

t_{fG} h
Guide value for grease operating life in operating hours

t_f h
Basic lubrication interval in operating hours, *Figure 1*, page 56

K_P, K_W, K_U –
Correction factors for load, stroke length and environment, see pages starting page 57.

Relubrication must be carried out, irrespective of the result of this calculation, after no more than 1 year.

Due to the ageing resistance of the grease, the grease operating life is restricted to a maximum of 3 years or 3 000 operating hours in the case of linear recirculating ball bearing and guideway assemblies MKUVE and MKUSE.

In case of doubt, consult the grease manufacturer.

Lubrication

Basic lubrication interval

The basic lubrication interval t_f is valid under the following conditions, *Figure 1*:

- bearing temperature < +70 °C
- load ratio $C_0/P = 20$
- no disruptive environmental influences
- stroke ratio H_v between 10 and 50.

Speed parameter GKW

The speed parameter GKW is defined as follows:

$$GKW = \frac{60}{\bar{v}} \cdot K_{LF}$$

GKW Speed parameter	–
$\bar{v}$ Mean travel velocity	m/min
K_{LF}	–

Bearing factor $K_{LF} = 4{,}5$ for greased carriages of linear recirculating ball bearing and guideway assemblies KUVE and KUSE.

t_f = basic lubrication interval
GKW = speed parameter

① Relubrication possible
② Regreasing necessary

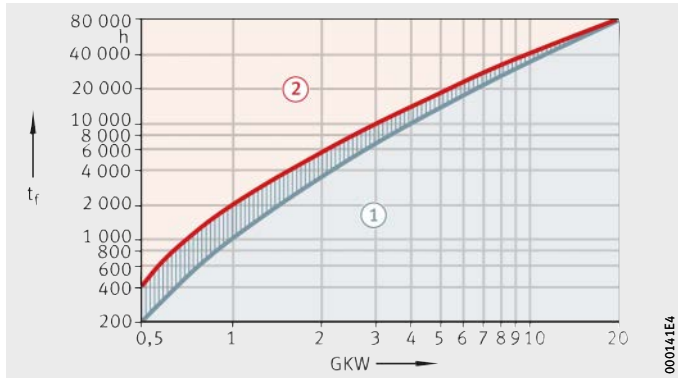

Figure 1
Calculation
of the basic lubrication interval

Correction factor for load K_P

The correction factor K_P takes account of the strain on the grease at a load ratio of $C_0/P < 20$, *Figure 2*.

K_P = correction factor for load
C_0/P = load ratio

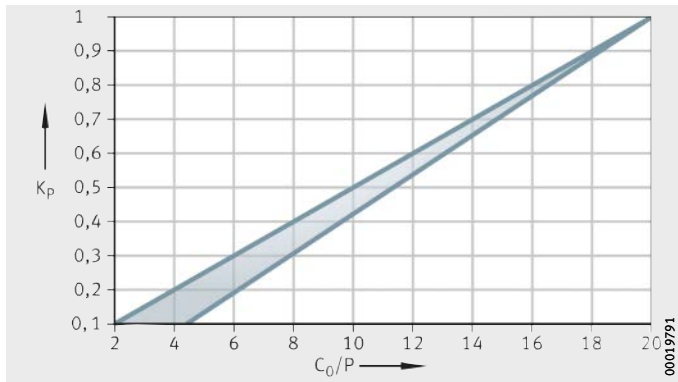

Figure 2
Correction factor for load

Correction factor for stroke length K_W

The correction factor K_W takes account of the distance to be lubricated, *Figure 3*. It is dependent on the stroke ratio.

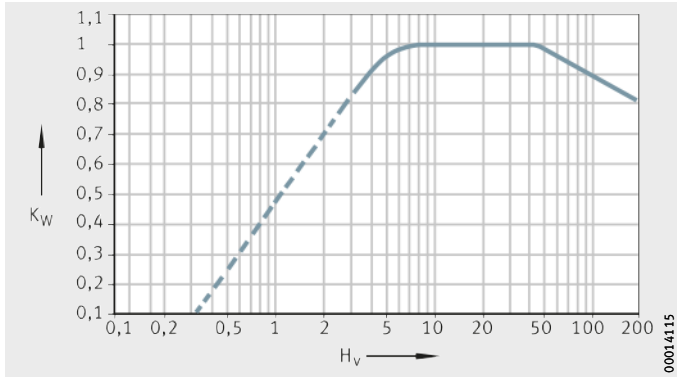

K_W = correction factor for stroke length
H_v = stroke ratio

Figure 3
Correction factor for stroke length

Stroke ratio H_v

In the case of a stroke ratio $H_v < 10$ or > 50, the grease operating life is reduced due to the risk of fretting corrosion or loss of grease.

The stroke ratio is calculated using the following equation:

$$H_v = \frac{H \cdot 10}{L_{saddle\ plate}}$$

H_v – Stroke ratio

H mm Stroke length

$L_{saddle\ plate}$ mm Effective saddle plate length according to following table.

If the stroke length is very short, the grease operating life may be shorter than the calculated guide value. In this case, special greases are recommended – please consult Schaeffler Group Industrial.

Effective saddle plate length of carriage

Actuator	Effective saddle plate length of fitted carriage $L_{saddle\ plate}$ mm
MKUVE15	39,8
MKUVE20	50,4
MKUVE25	60,7
MKUSE25	60,4
MDKUVE15	39,8
MDKUVE25	60,7
MDKUSE25	60,4
MDKUVE35	80,0
MKKUSE20..-ZR	51,9
MKKUVE20..-KGT	50,4
MTKUSE25	82,9
LTP/LTPG15	38,7
LTP25-325..-KGT	56,5
LTPG25-325..-KGT	60,4

Correction factor for environment K_U

The correction factor K_U takes account of shaking forces, vibrations (a cause of fretting corrosion) and shocks, see table.

These influences place an additional strain on the grease.

If cooling lubricant or moisture comes into contact with the guidance system, calculation is not possible.

Environmental influence and correction factor K_U

Environmental influence	Correction factor K_U
Slight	1
Moderate	0,8
Heavy	0,5

Relubrication interval

If the guide value for the grease operating life t_{fG} is less than the required operating duration of the linear unit, relubrication must be carried out.

Relubrication must be carried out at a time when the old grease can still be forced out of the carriage by the new grease.

A guide value for the relubrication interval for most applications is:

$$t_{fR} = 0,5 \cdot t_{fG}; \text{ if } t_{fG} < t_{fE}$$

t_{fR} h
Guide value for relubrication interval in operating hours

t_{fG} h
Guide value for grease operating life in operating hours

t_{fE} h
Required operating duration in hours.

Relubrication quantities

The relubrication quantities are given in the descriptive chapters of the individual actuators and linear tables.

In the case of actuators with monorail guidance system and toothed belt drive, the return shaft or drive shaft bearing arrangement is sealed and lubricated for life.

The lubrication method involves loss of lubricant. The used lubricant must be collected and disposed of by methods that help to protect the environment.

The handling and use of lubricants is governed by national regulations for environmental protection and occupational safety as well as information from the lubricant manufacturers.
These regulations must be observed.

Application in special conditions

In vacuum applications, lubricants with low vapourisation rates are required in order to maintain the vacuum atmosphere.
In the foodstuffs sector and in clean rooms, special requirements are also placed on lubricants in relation to emissions and compatibility.
For such environmental conditions, please consult Schaeffler.

Actuators with track roller guidance system

Track rollers and return units are lubricated for life, while the raceways must be lubricated.

Relubrication of the guideway raceways

The guideway raceways must be lubricated. Relubrication can be carried out by means of lubrication and wiper units.
These are mounted on the carriage or integrated in the carriage.
The guideway raceways are lubricated by an oil-soaked felt insert.

The felt inserts are soaked with oil that has the following characteristics:

- viscosity 460
- H1 authorisation for the food industry.

In the case of actuators with external track roller guidance system, lubrication nipples are inserted in the end faces of the carriage. They supply oil to the felt inserts.

In the case of actuators with internal track roller guidance system, the lubrication nipples or lubrication holes are located on the sides of the carriages. These allow the supply of oil to the felt inserts.

Lubrication intervals

The lubrication intervals for guideway raceways are dependent on the environmental influences. The cleaner the environment, the smaller the quantity of lubricant consumed.

The time and quantity can only be determined precisely under operating conditions since it is not possible to determine all the influences by calculation. An observation period of adequate length must be allowed.

Fretting corrosion is a consequence of lubricant starvation.
It can be identified by a reddish discolouration of the opposing raceway or the outer ring of the track roller. Lubricant starvation can lead to permanent damage to the actuator and therefore to failure.

It is the responsibility of the user to shorten the lubrication intervals accordingly in order to prevent fretting corrosion. In general, a thin film of oil should always be present on the guidance shafts.

Lubrication of track rollers

The track rollers in the carriages of actuators with track roller guidance system are greased with a high quality lithium complex soap grease according to DIN 51825-K3K–30 and are maintenance-free.

Miscibility

Oils with a mineral oil base of the same classification are miscible with each other. The viscosities must not differ by more than one ISO VG grade.

The miscibility of synthetic oils must also be checked. It is the user's responsibility to obtain information on this matter from the lubricant manufacturer.

Lubrication

Actuators with linear ball guidance system

For the lubrication of linear ball guidance systems in linear units, grease has proved effective as a lubricant. Oil lubrication is therefore not considered at this point.

Lubrication interval of linear ball bearings

In the case of linear tables with shaft and linear ball bearings, the lubrication interval of the guidance system is dependent on the following conditions:

- temperature
- travel velocity
- stroke length
- lubricant
- environmental conditions
- mounting position.

Based on experience, the sealed linear ball bearings fitted in the shaft guidance systems of linear tables achieve their operating life with initial greasing under the following conditions:

- loads $C_0/P > 10$
- room temperature
- travel velocity $v/v_{max} \leqq 0{,}6$.

If it is not possible to achieve these conditions, relubrication must be carried out.

Precise lubrication intervals should be determined by tests conducted under application conditions.

Actuators with screw drive

Based on experience, the relubrication interval for the nuts is between two and three hundred hours. This applies to all nuts fitted in the screw drives of actuators and linear tables.

Only one lubrication point

If the linear units and the nut in an actuator are supplied jointly via one lubrication point, the shortest relubrication interval is taken as the defining value.

Actuators with toothed belt drive

The bearing arrangements in the return units of toothed belts are sealed and lubricated for life.

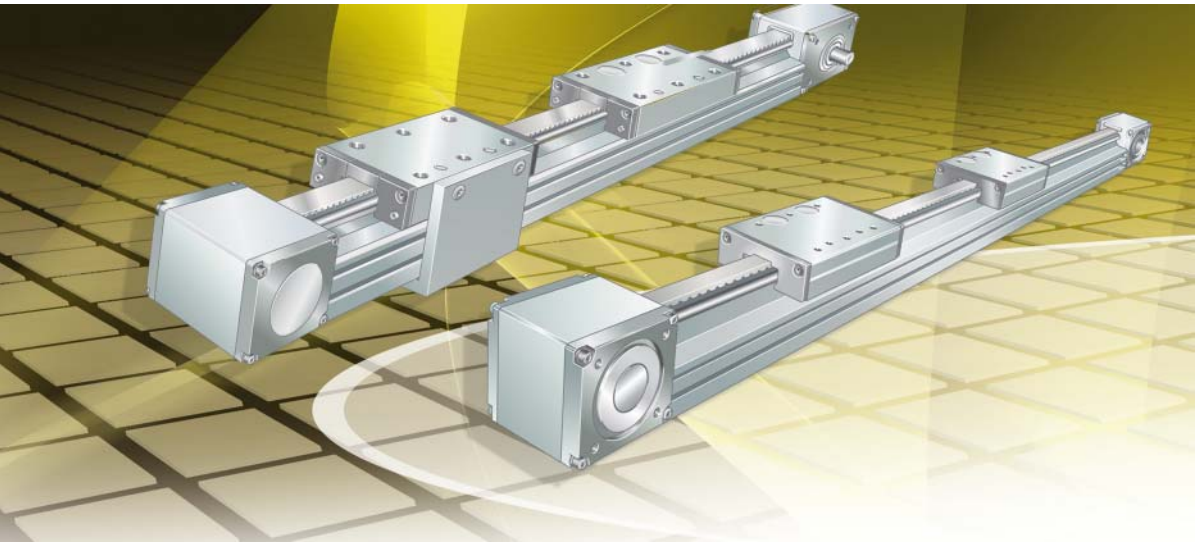

Actuators with external track roller guidance system

Actuators with toothed belt drive
Clamping actuators with toothed belt drive

Actuators
with external track roller guidance system

Actuators with toothed belt drive

Actuators MLF..-ZR are driven linear units of a lightweight construction. Their area of application is characterised by low to moderate accuracy requirements, long travel distances with consistently low displacement resistance and low to moderate loads and moments. They facilitate high travel velocities and are resistant to contamination. Their smooth running is ensured by two pairs of large sized, maintenance-free track rollers.

The carriages are guided by the track roller pairs. The rolling bearings run in a wraparound arrangement on two parallel shafts inserted in a support rail unit a self-supporting design. The external track roller pairs are adjusted clearance-free against the internal structure. The track rollers are designed as double row angular contact ball bearings with a heavy section, profiled outer ring and can support high radial and axial forces.

Drive is provided by a preloaded, wear-resistant toothed belt that is guided and wrapped at the ends by external return units.

The range is supplemented by fasteners and connectors, accessories such as couplings and coupling housings and by electric drive components such as motors, motor/gearbox units and controllers that are optimally matched to each other.

An overview of specific product characteristics for preselection of linear actuators is given on page 64.

Clamping actuators with toothed belt drive

Actuators MKLF..-ZR are designed for special applications and correspond in their basic design and technical characteristics to the actuators MLF..-ZR. While the carriages in the linear actuator MKLF..-ZR always travel in the same direction, clamping actuators have two carriages moving in synchronised opposing directions.

An overview of specific product characteristics for preselection of clamping actuators is given on page 66.

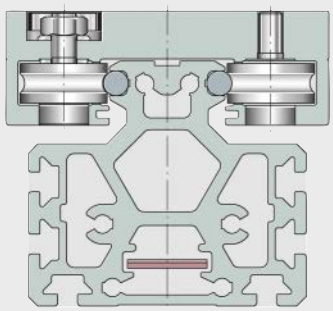

MLF..-ZR

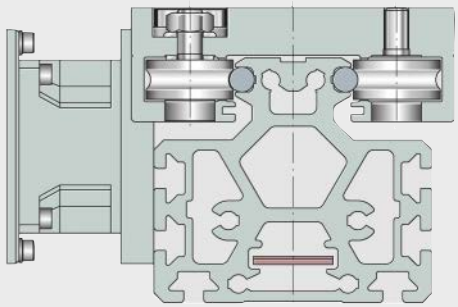

MLF..-ZR -GTRI

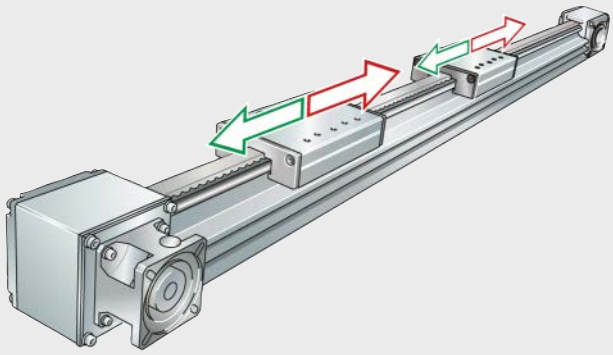

00019880

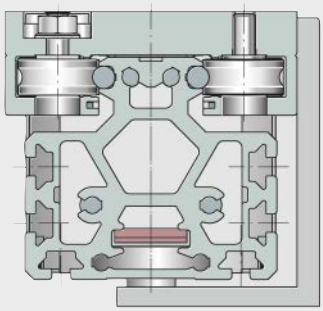

MKLF..-ZR

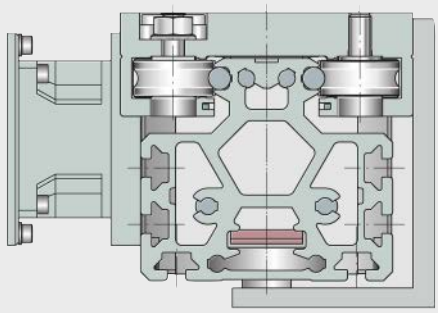

MKLF..-ZR -GTRI

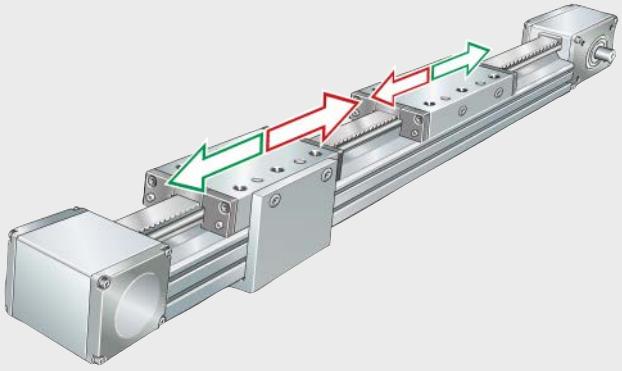

00019882

Actuators with toothed belt drive without planetary gearbox

Linear actuator	Characteristics				
	Mounting cross-section width×height mm	Length of carriage L mm	Maximum support rail length L_2		Load carrying capacity
			Single-piece mm	Multi-piece mm	
MLF32-155-ZR **MLF32-300-ZR**	86×82	155 300	8 000	24 000	From all directions
MLF52-200-ZR **MLF52-300-ZR**	130×119	200 300	8 000	24 000	From all directions
MLF52-245-E-ZR **MLF52-500-E-ZR**	145×125	245 500	8 000	24 000	From all directions
MLF52-260-EE-ZR **MLF52-500-EE-ZR**	155×125	260 500	8 000	24 000	From all directions

Actuators with toothed belt drive with planetary gearbox

Linear actuator	Characteristics			
	Mounting cross-section width×height mm	Length of carriage L mm	Maximum support rail length L_2 Single-piece mm	Load carrying capacity
MLF52-200-ZR..-GTRI **MLF52-300-ZR..-GTRI**	130×119	200 300	8 000	From all directions
MLF52-245-E-ZR..-GTRI **MLF52-500-E-ZR..-GTRI**	145×125	245 500	8 000	From all directions
MLF52-260-EE-ZR..-GTRI **MLF52-500-EE-ZR..-GTRI**	155×125	260 500	8 000	From all directions

1) Basic load ratings C and C_0 in the compressive direction of the actuator guidance system.

2) For i = 1/4.

3) For i = 1/8.

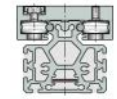

Track roller guidance system	Basic load ratings of carriage guidance system[1]		Toothed belt drive		Permissible toothed belt operating force	Maximum travel velocity	Maximum acceleration	Repeat accuracy	Operating temperature	Mounting position
	dyn. C N	stat. C_0 N	Toothed belt	Feed per revolution mm	N	m/s	m/s^2	mm	°C	
Angular contact ball bearings, adjusted clearance-free	4 100	2 400	20-AT-5	175	640	8	40	±0,1	0 to +80	Preferably horizontal, vertical also possible
Angular contact ball bearings, adjusted clearance-free	10 000	5 200	32-AT-10	270	1 750	8	40	±0,1	0 to +80	Preferably horizontal, vertical also possible
Angular contact ball bearings, adjusted clearance-free	17 800	8 900	32-AT-10	270	1 750	8	40	±0,1	0 to +80	Preferably horizontal, vertical also possible
Angular contact ball bearings, adjusted clearance-free	20 000	10 000	32-AT-10	270	1 750	8	40	±0,1	0 to +80	Preferably horizontal, vertical also possible

Track roller guidance system	Basic load ratings of carriage guidance system[1]		Toothed belt drive		Permissible toothed belt operating force	Maximum travel velocity	Maximum acceleration	Repeat accuracy	Operating temperature	Mounting position
	dyn. C N	stat. C_0 N	Toothed belt	Feed per revolution mm	N	m/s	m/s^2	mm	°C	
Angular contact ball bearings, adjusted clearance-free	10 000	5 200	32-AT-10	67,5[2] 33,75[3]	1 750	4,5[2] 2,25[3]	40	±0,1	0 to +80	Preferably horizontal, vertical also possible
Angular contact ball bearings, adjusted clearance-free	17 800	8 900	32-AT-10	67,5[2] 33,75[3]	1 750	4,5[2] 2,25[3]	40	±0,1	0 to +80	Preferably horizontal, vertical also possible
Angular contact ball bearings, adjusted clearance-free	20 000	10 000	32-AT-10	67,5[2] 33,75[3]	1 750	4,5[2] 2,25[3]	40	±0,1	0 to +80	Preferably horizontal, vertical also possible

Clamping actuators with toothed belt drive with two carriages moving in opposing directions

Clamping actuator	Characteristics			
	Mounting cross-section width×height mm	Length of carriage L mm	Maximum support rail length L_2 Single-piece mm	Load carrying capacity
MKLF32-155-ZR **MKLF32-300-ZR**	94×102	155 300	8 000	From all directions
MKLF52-200-ZR **MKLF52-300-ZR**	140×131	200 300	8 000	From all directions
MKLF52-245-E-ZR **MKLF52-500-E-ZR**	155×137	245 500	8 000	From all directions
MKLF52-260-EE-ZR **MKLF52-500-EE-ZR**	165×137	260 500	8 000	From all directions

Clamping actuators with toothed belt drive with two carriages moving in opposing directions with planetary gearbox

Clamping actuator	Characteristics			
	Mounting cross-section width×height mm	Length of carriage L mm	Maximum support rail length L_2 Single-piece mm	Load carrying capacity
MKLF52-200-ZR..-GTRI **MKLF52-300-ZR..-GTRI**	140×131	200 300	8 000	From all directions
MKLF52-245-E-ZR..-GTRI **MKLF52-500-E-ZR..-GTRI**	155×137	245 500	8 000	From all directions
MKLF52-260-EE-ZR..-GTRI **MKLF52-500-EE-ZR..-GTRI**	165×137	260 500	8 000	From all directions

1) Basic load ratings C and C_0 in the compressive direction of the actuator guidance system.

2) Per carriage.

3) For i = 1/4.

4) For i = 1/8.

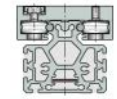

Track roller guidance system	Basic load ratings of carriage guidance system[1]		Toothed belt drive		Permissible toothed belt operating force	Maximum travel velocity	Maximum acceleration	Repeat accuracy	Operating temperature	Mounting position
	dyn. C N	stat. C_0 N	Toothed belt	Feed per revolution[2] mm	N	m/s	m/s^2	mm	°C	
Angular contact ball bearings, adjusted clearance-free	4 100	2 400	20-AT-5	175	640	8	40	±0,1	0 to +80	Preferably horizontal, vertical also possible
Angular contact ball bearings, adjusted clearance-free	10 000	5 200	32-AT-10	270	1 750	8	40	±0,1	0 to +80	Preferably horizontal, vertical also possible
Angular contact ball bearings, adjusted clearance-free	17 800	8 900	32-AT-10	270	1 750	8	40	±0,1	0 to +80	Preferably horizontal, vertical also possible
Angular contact ball bearings, adjusted clearance-free	20 000	10 000	32-AT-10	270	1 750	8	40	±0,1	0 to +80	Preferably horizontal, vertical also possible

Track roller guidance system	Basic load ratings of carriage guidance system[1]		Toothed belt drive		Permissible toothed belt operating force	Maximum travel velocity	Maximum acceleration	Repeat accuracy	Operating temperature	Mounting position
	dyn. C N	stat. C_0 N	Toothed belt	Feed per revolution[2] mm	N	m/s	m/s^2	mm	°C	
Angular contact ball bearings, adjusted clearance-free	10 000	5 200	32-AT-10	67,5[3] 33,75[4]	1 750	4,5[3] 2,25[4]	40	±0,1	0 to +80	Preferably horizontal, vertical also possible
Angular contact ball bearings, adjusted clearance-free	17 800	8 900	32-AT-10	67,5[3] 33,75[4]	1 750	4,5[3] 2,25[4]	40	±0,1	0 to +80	Preferably horizontal, vertical also possible
Angular contact ball bearings, adjusted clearance-free	20 000	10 000	32-AT-10	67,5[3] 33,75[4]	1 750	4,5[3] 2,25[4]	40	±0,1	0 to +80	Preferably horizontal, vertical also possible

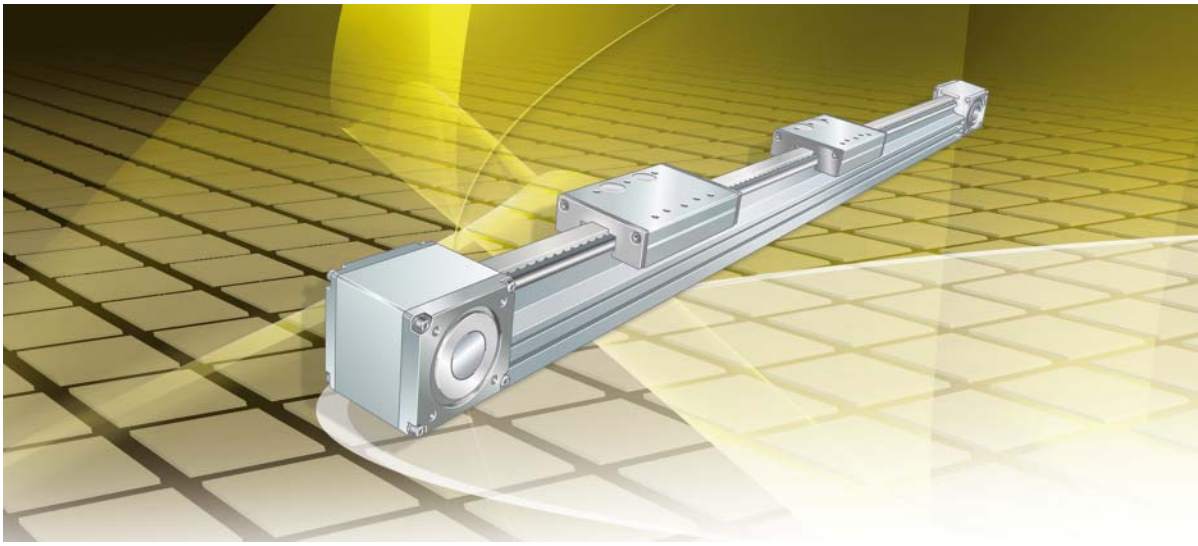

Actuators
with external track roller guidance system

Toothed belt drive

Actuators
with external track roller guidance system

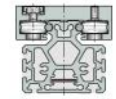

Actuators with external track roller guidance system

Basic design

External
track roller guidance system
Toothed belt drive

MLF..-ZR

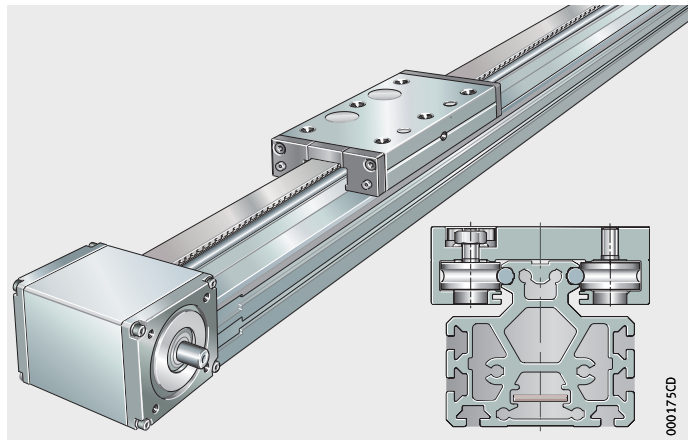

External
track roller guidance system
Toothed belt drive
Integrated planetary gearbox

MLF52..-ZR-GTRI

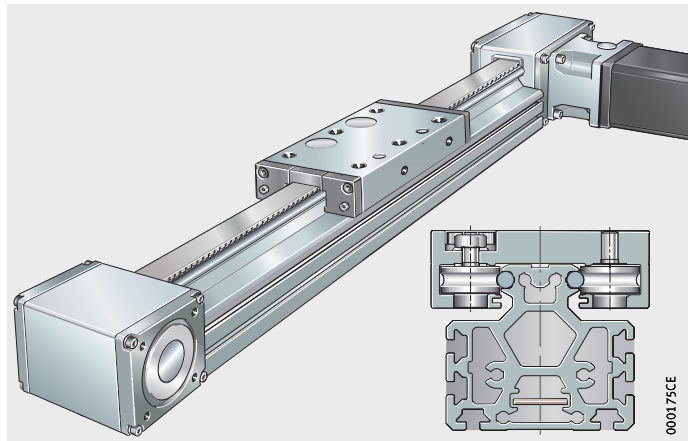

Actuators
with external track roller guidance system

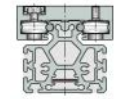

Features

Linear actuators MLF..-ZR comprise:

- a carriage available in various lengths
- an external track roller guidance system
- a support rail unit with external running shafts for the carriage
- a toothed belt drive
- two return units.

Designs

Linear actuators of series MLF..-ZR are available in various designs, see table. The possible designs and combinations vary according to the size and actuator type.

Available designs

Suffix	Description	Design
–	One driven carriage	Basic design
GTRI	Integrated planetary gearbox	Standard
FA517	Multi-piece support rail	Standard
RB	Corrosion-resistant design	Special design
W2	Second, driven carriage	Standard
WN2	Second, non-driven carriage	Standard
FBALG	Bellows	Standard

Special designs

Special designs are available by agreement. Examples of these are linear actuators:

- with more than two driven carriages
- with more than one non-driven carriage
- with additional, non-driven carriage of different length or wide carriage
- with several driven and non-driven carriages (of different length or wide carriage)
- with reinforced or antistatic toothed belt or toothed belt of high temperature design
- with T-strips inserted in the T-slots
- with bellows resistant to welding beads
- with a compressed air connection in the return units
- with a drive stud of special dimensions
- with special machining.

Carriage

The carriage has a saddle plate made from anodised profiled aluminium, four bolts, four profiled track rollers and a plastic lubrication and wiper unit on each end face.

The carriage is set clearance-free by means of two eccentric bolts. The carriage contains integral tensioners on both sides for the toothed belt. Available carriage lengths as a function of actuator sizes, see table and *Figure 1*.

Lengths of carriages

Series	Carriage length mm	Suffix
MLF32..-ZR	155	155
	300	300
MLF52..-ZR	200	200
	245	245
	260	260
	300	300
	500	500

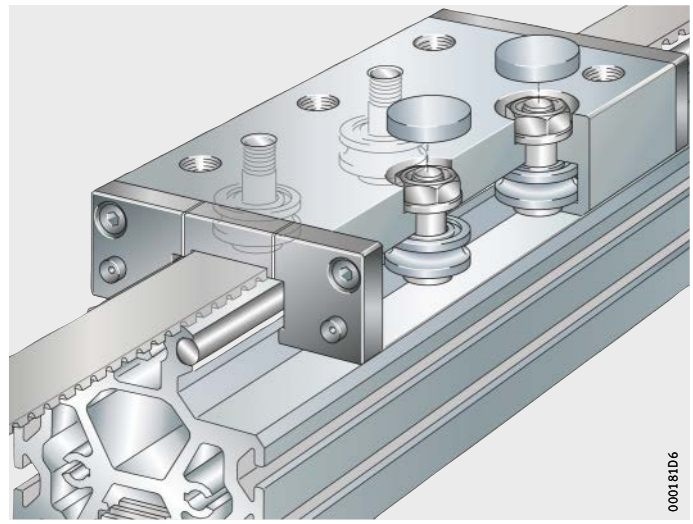

Figure 1
Carriage

Longer carriage or second carriage

The carriages of linear actuators are available in various lengths. Longer carriages allow support of higher moment loads.

Optionally, a second driven or non-driven carriage can be fitted. The non-driven carriage has a feedthrough for the toothed belt and can thus be moved freely. It is connected to the other carriage by means of the adjacent construction.

Movable or stationary carriage

A movable carriage is mounted and used as follows, *Figure 2*:

- where a long stroke length or total length is required
- predominantly for horizontal mounting.

A stationary carriage is mounted and used as follows:

- where a short stroke length required
- predominantly for vertical mounting.

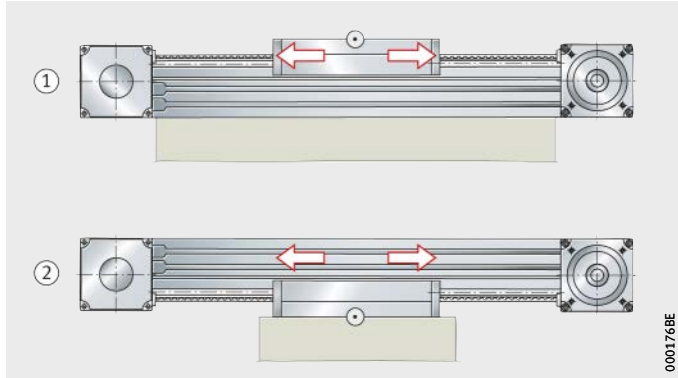

① Movable carriage
② Stationary carriage

Figure 2
Movable or stationary carriage

Lubrication

The carriage has two lubrication nipples in each end face. These are used to lubricate the guidance shafts of the support rail. The track rollers are greased and do not require lubrication.

Sealing

The carriage is sealed by means of lubrication and wiper units. The profiled track rollers have gap seal on both sides.

Location

The carriage has six threaded holes for fixing to the adjacent construction. Longer carriages have up to ten threaded holes.

Support rail unit

The support rail LFS..-M is a composite unit. It comprises a carrier profile made from anodised aluminium and rolled-in high precision running shafts ∅ 6h6 or ∅ 10h6 made from high alloy steel.

The running shafts are hardened and ground. Since the support rail has very high bending rigidity, it can be used to span large gaps.

Support rail length and segments

The maximum length of a single-piece support rail is 8 000 mm. Longer lengths can be achieved by combining several support rail segments. The support rail segments are connected at their butt joints by means of two laterally screw mounted and dowelled aluminium plates. The minimum length of a segment of a multi-piece support rail is 500 mm.

One return unit and the carriage are premounted on the first support rail segment. The other support rail segments with the screw mounted and dowelled aluminium plates, the second return unit and the toothed belt are supplied in addition and must be fitted by the customer, see page 96.

T-slots

The support rails have T-slots for standardised T-nuts.
These are used in order to fix the actuators to the adjacent construction, see page 93.

Return unit

The return units comprise a housing made from anodised aluminium profile, two covers and a shaft unit, *Figure 3*. The shaft is supported on both sides by ball bearings lubricated for life.
The belt is wrapped by means of a gear mounted on the shaft.
The return zone is protected against contamination by means of wiper brushes.

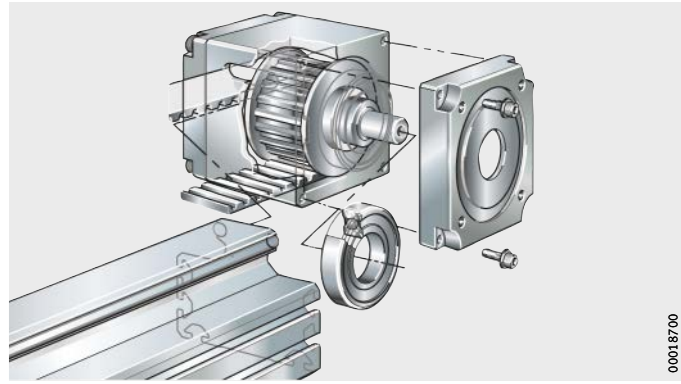

Figure 3
Return unit

Toothed belt

A reinforced toothed belt is fitted that allows the transmission of high tensile forces with a long rating life. Tensioning of the belt is carried out by means of the tensioning unit in the carriage.

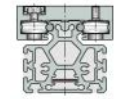

Drive

The actuators are available without a drive shaft as well as with a drive shaft on the left side, right side or passing through the unit, see table. Possible combinations and drive variants, see also page 71.

Suffixes

Drive variants	Suffix
Drive shaft on left side	AL
Drive shaft on right side	AR
No drive shaft	OZ
Drive shaft on both sides (left and right)	RL

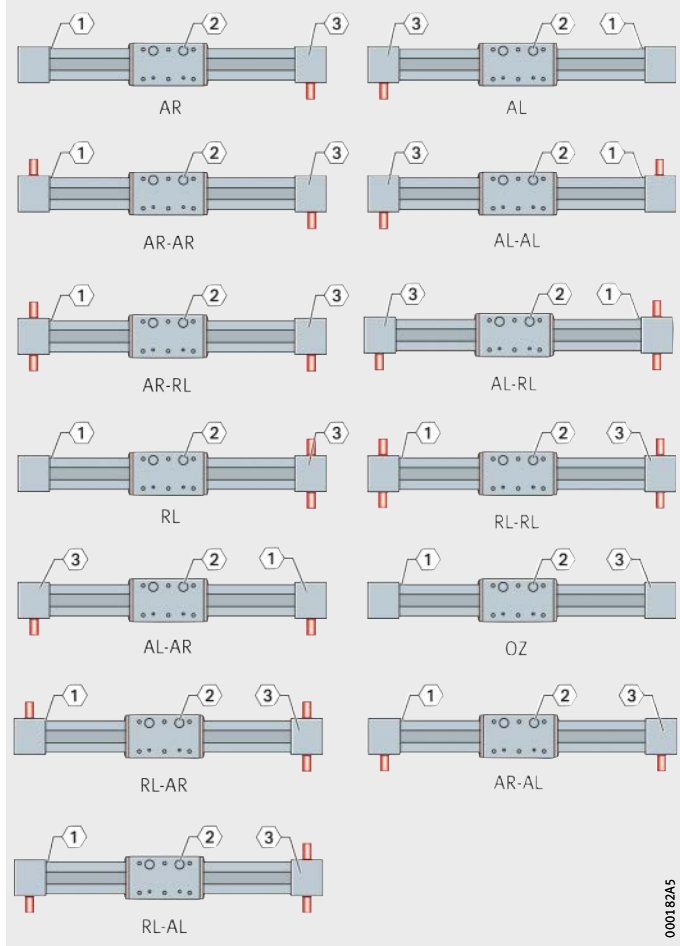

(1) Filling slot for T-nuts and T-bolts on single-piece support rails
(2) Reference side (carriage side with eccentric bolts)
(3) Drive and marking side

Figure 4
Drive variants

Drive elements

For actuators, Schaeffler also offers components such as couplings, coupling housings and planetary gearboxes as well as servo motors and servo controllers, *Figure 5*.

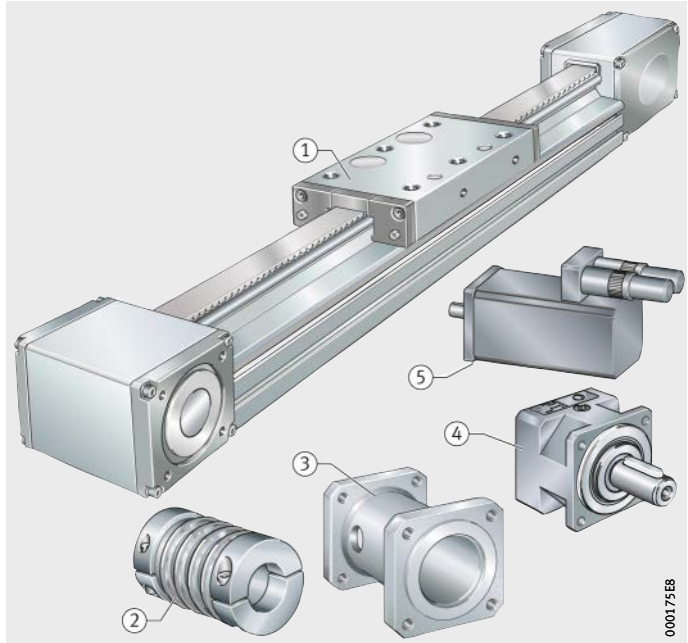

Example:
MLF52-200-ZR
① Actuator with external track roller guidance system and toothed belt drive (linear actuator given here as an example)
② Coupling KUP
③ Coupling housing KGEH
④ Planetary gearbox GETR
⑤ Servo motor MOT

Figure 5
Linear actuator with drive elements

Proven drive combinations

The combination of the necessary drive components for vertical and horizontal applications as a function of the mass to be moved, the acceleration and the travel velocity of carriages is shown in the section Proven drive combinations, page 684.

Mechanical accessories

A large number of accessories are available for linear actuators with external track roller guidance system. The allocation of accessories, see table, is valid if the data match the Technical principles, page 13, and the Design and safety guidelines, page 78.

Allocation

Linear actuator	MLF..-ZR	
Size	32	52
Fixing brackets, see page 811		
WKL-48×48×35	①	②
WKL-65×65×35	–	①
WKL-65×65×30-N	–	③
WKL-65×65×35-N	–	①
Clamping lugs, see page 829		
SPPR-28×30	①	①
T-nuts, see page 835		
MU-DIN 508 M6×8	④	④
MU-M4×8 (similar to DIN 508)	④	④
T-nut made from corrosion-resistant steel, see page 835		
MU-DIN 508 M6×8-RB	④	④
T-bolts, see page 835		
SHR DIN 787-M8×8×32	④	④
Rotatable T-nuts, see page 836		
MU-M4×8-RHOMBUS	④	④
MU-M6×8-RHOMBUS	④	④
Positionable T-nuts, see page 836		
MU-M4×8-POS	④	④
MU-M5×8-POS	④	④
MU-M6×8-POS	④	④
MU-M8×8-POS	④	④
Hexagon nuts, see page 837		
MU-ISO 4032 M8	④	④
T-strips, see page 837		
LEIS-M6/8-T-NUT-SB-ST	④ ⑥	④ ⑥
LEIS-M8/8-T-NUT-SB-ST	④ ⑥	④ ⑥
LEIS-M6/8-T-NUT-HR-ST	④ ⑤	④ ⑤
LEIS-M6/8-T-NUT-HR-ALU	④	④
LEIS-M6/8-T-NUT-ST	④	⑤
Connector sets (parallel connectors), see page 838		
VBS-PVB8	④	④
VBS-PVB8/10	④	④
Slot closing strips, see page 838		
NAD-8×4,5	④	④
NAD-8×11,5	④	④

① Suitable.
② Only for the lowest lateral T-slot in the support rail.
③ Only with M5 screws, only in the lateral T-slots in the support rail.
④ For T-slots in the support rail.
⑤ T-strips must already have been inserted at the time of despatch.
⑥ Swivel type T-strip.

Design and safety guidelines

Load carrying capacity and load safety factor

The load carrying capacities and load safety factors to be observed differ as a function of the mounting position, see page 43 and Product preselection matrix, page 64.

Deflection

The deflection of linear actuators is essentially dependent on the support spacing, the rigidity of the support rail, the adjacent construction and the bearing arrangement. As the rigidity of these components increases, the deflection of the actuators is reduced.

Diagrams

The diagram values are determined for a bearing arrangement or clamping which is in theory infinitely rigid and are subdivided into locating/non-locating and locating/locating bearing arrangements, starting *Figure 6*, page 79.

The deflection of the support rail is valid under the following conditions:

- support rail comprising carrier profile and guidance shafts
- support spacings up to 8 000 mm
- introduction of the load at the centre of the carriage if this is at the centre point between the bearing points.

The diagrams represent guide values only for the deflection of the support rail, starting *Figure 10*, page 80. The effect of deflection on the rating life of the guidance system is not taken into consideration.

It is not possible to provide deflection diagrams for actuators with two carriages since there will be different spacings between the carriages. In such cases, please consult the Schaeffler engineering service.

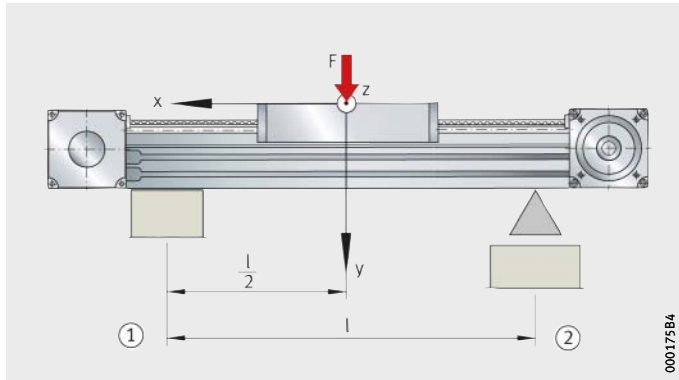

① Locating bearing arrangement
② Non-locating bearing arrangement

Figure 6
Deflection about the z axis

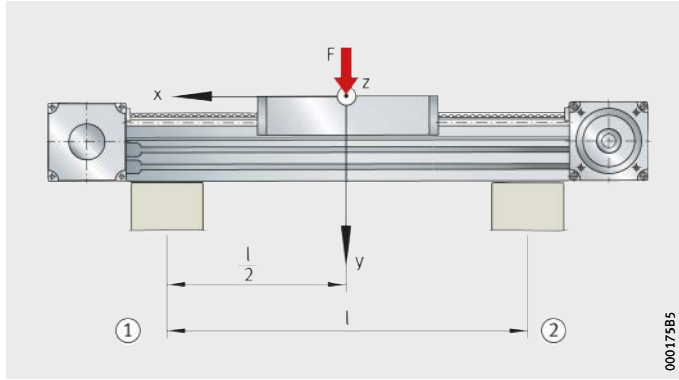

① Locating bearing arrangement
② Locating bearing arrangement

Figure 7
Deflection about the z axis

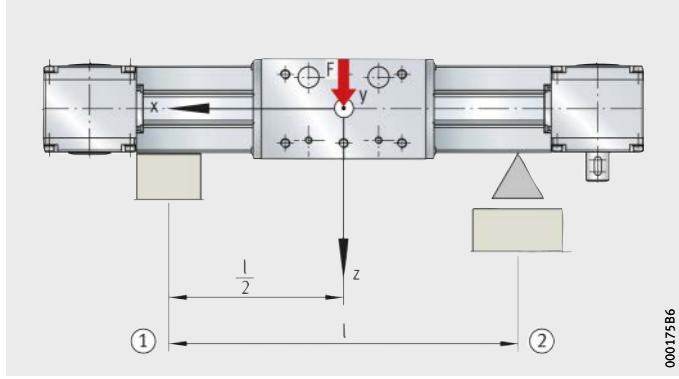

① Locating bearing arrangement
② Non-locating bearing arrangement

Figure 8
Deflection about the y axis

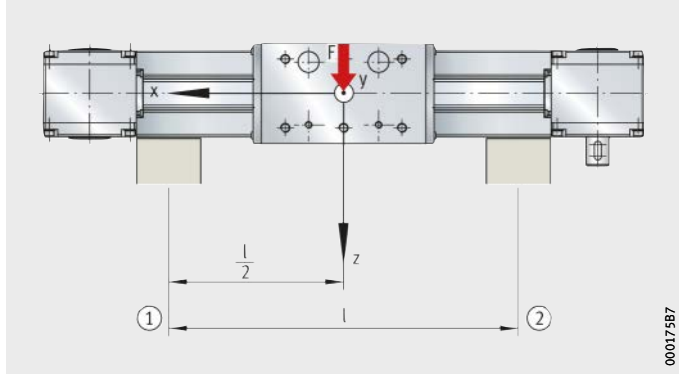

① Locating bearing arrangement
② Locating bearing arrangement

Figure 9
Deflection about the y axis

MLF32..-ZR

Locating/non-locating bearing arrangement
Δ_{vy} = deflection
l = support spacing

Figure 10
Deflection about the z axis

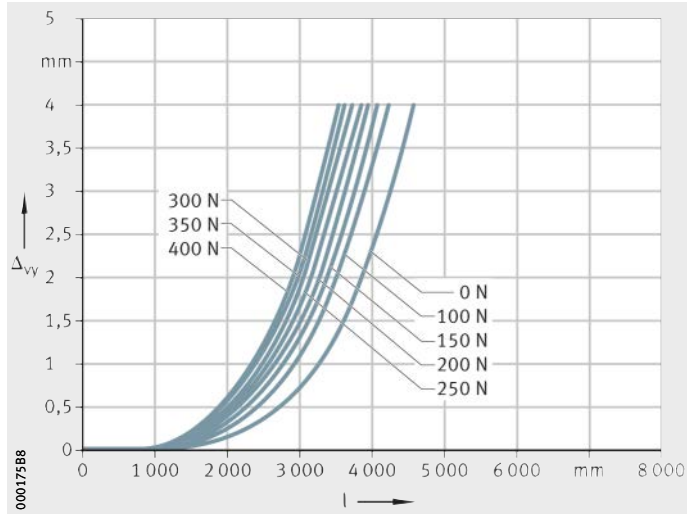

MLF32..-ZR

Locating/locating bearing arrangement
Δ_{vy} = deflection
l = support spacing

Figure 11
Deflection about the z axis

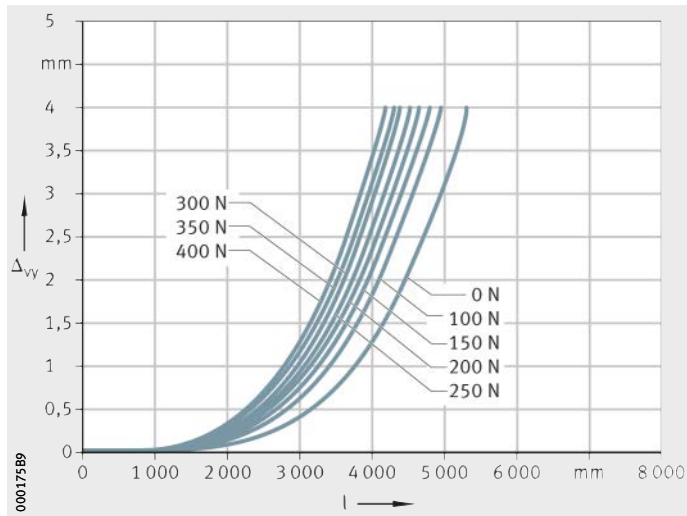

MLF32..-ZR

Locating/non-locating bearing arrangement
Δ_{vz} = deflection
l = support spacing

Figure 12
Deflection about the y axis

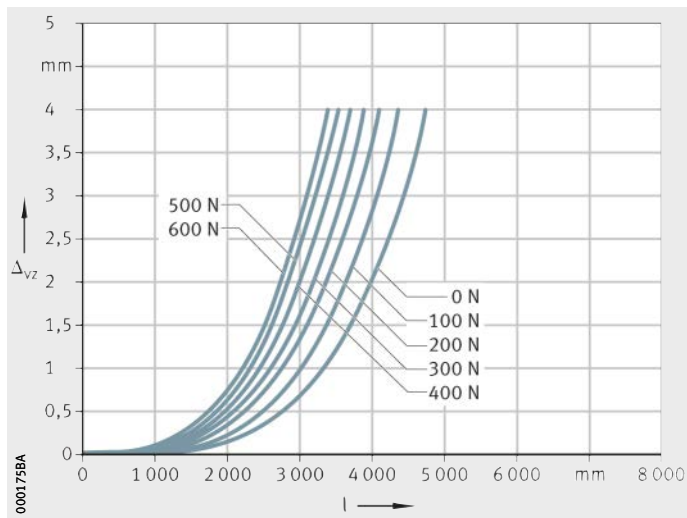

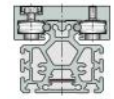

MLF32..-ZR

Locating/locating bearing arrangement
Δ_{vz} = deflection
l = support spacing

Figure 13
Deflection about the y axis

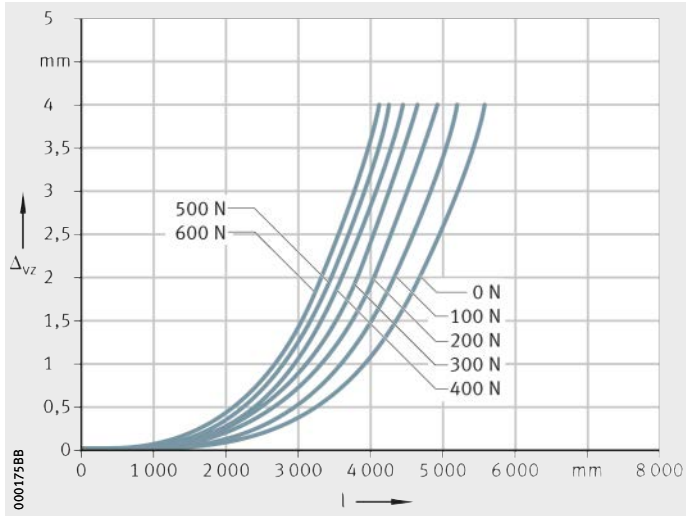

MLF52..-ZR

Locating/non-locating bearing arrangement
Δ_{vy} = deflection
l = support spacing

Figure 14
Deflection about the z axis

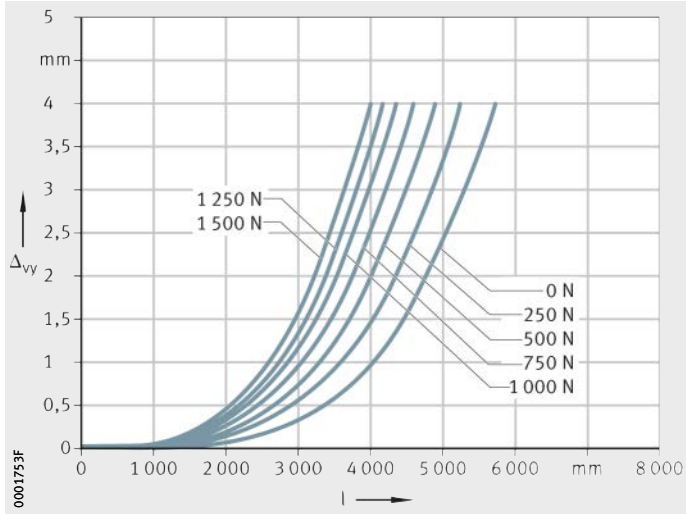

MLF52..-ZR

Locating/locating bearing arrangement
Δ_{vy} = deflection
l = support spacing

Figure 15
Deflection about the z axis

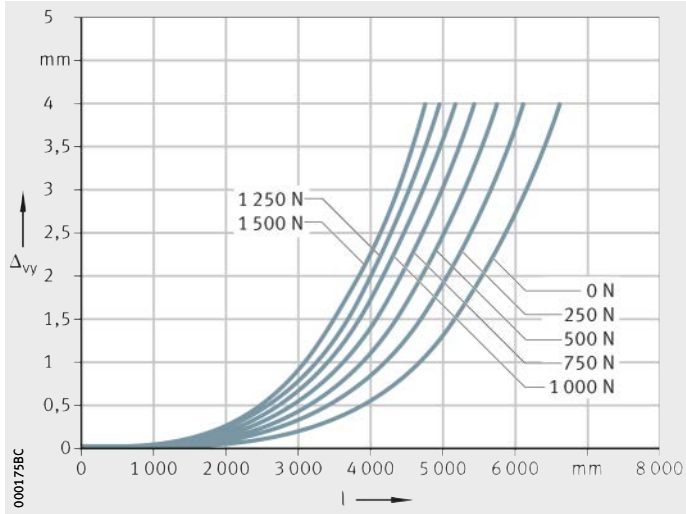

MLF52..-ZR

Locating/non-locating bearing arrangement
Δ_{vz} = deflection
l = support spacing

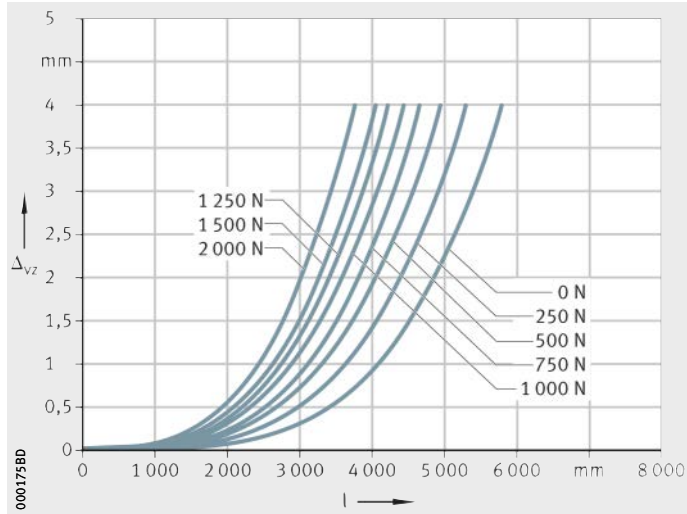

Figure 16
Deflection about the y axis

MLF52..-ZR

Locating/locating bearing arrangement
Δ_{vz} = deflection
l = support spacing

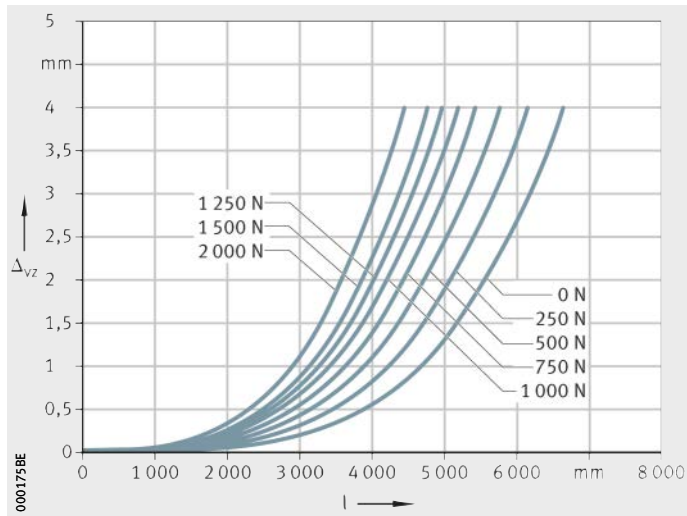

Figure 17
Deflection about the y axis

Idling drive torque

The idling drive torque M_0 of linear actuators is calculated for a constant velocity and for a horizontal (M_{0h}) or vertical (M_{0v}) mounting position, starting *Figure 18*. The idling drive torque increases with increasing travel velocity. The data in the diagrams are maximum values.

MLF32..-ZR
MLF32..-ZR..-W2
MLF32..-ZR..-WN2

v = travel velocity of carriage
M_{0h} = idling drive torque

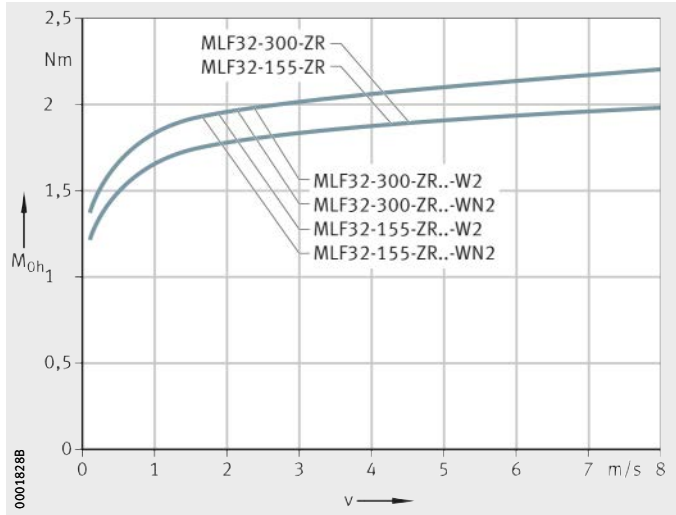

Figure 18
Idling drive torque
Horizontal mounting position

MLF32..-ZR
MLF32..-ZR..-W2
MLF32..-ZR..-WN2

v = travel velocity of carriage
M_{0v} = idling drive torque

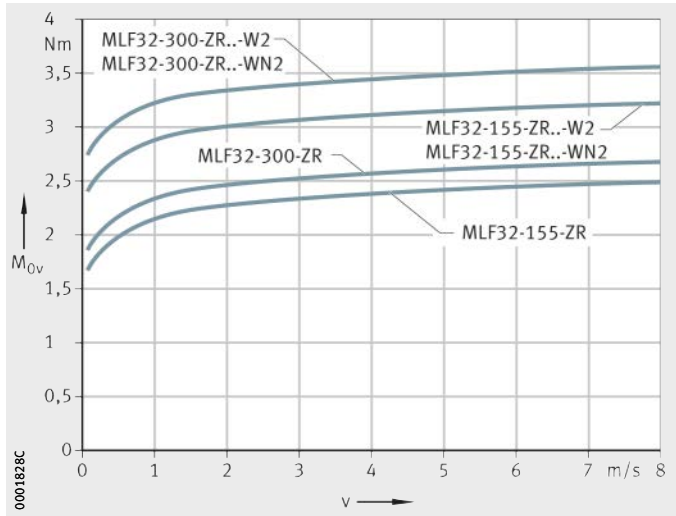

Figure 19
Idling drive torque
Vertical mounting position

MLF52..-ZR
MLF52..-ZR..-W2
MLF52..-ZR..-WN2

v = travel velocity of carriage
M_{0h} = idling drive torque

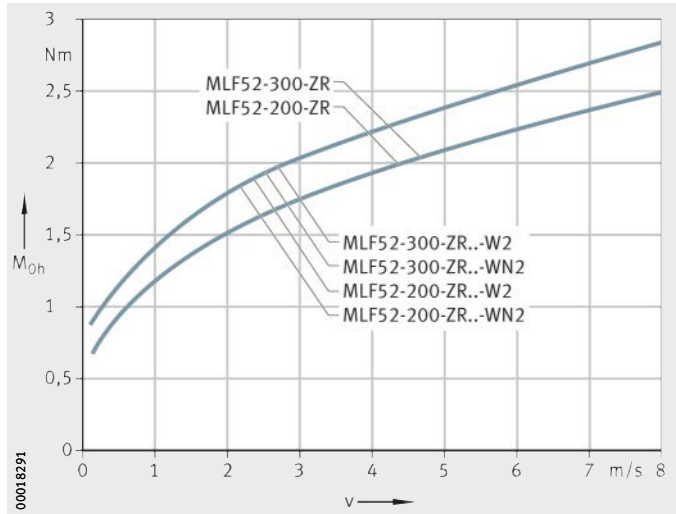

Figure 20
Idling drive torque
Horizontal mounting position

MLF52..-ZR
MLF52..-ZR..-W2
MLF52..-ZR..-WN2

v = travel velocity of carriage
M_{0v} = idling drive torque

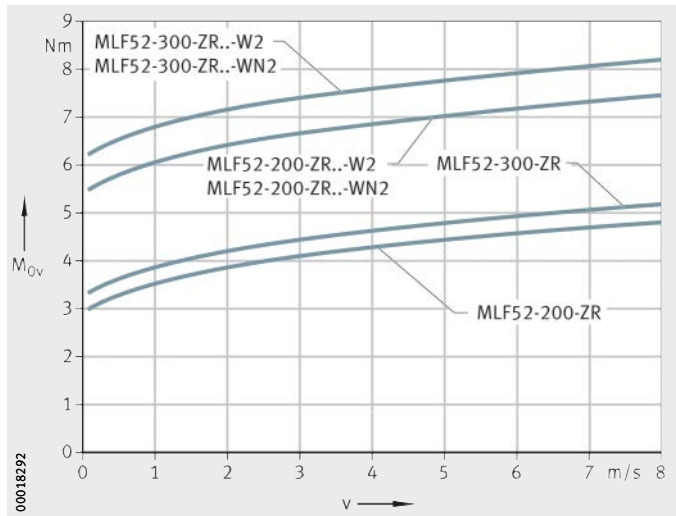

Figure 21
Idling drive torque
Vertical mounting position

MLF52..-E-ZR
MLF52..-E-ZR..-W2
MLF52..-E-ZR..-WN2

v = travel velocity of carriage
M_{0h} = idling drive torque

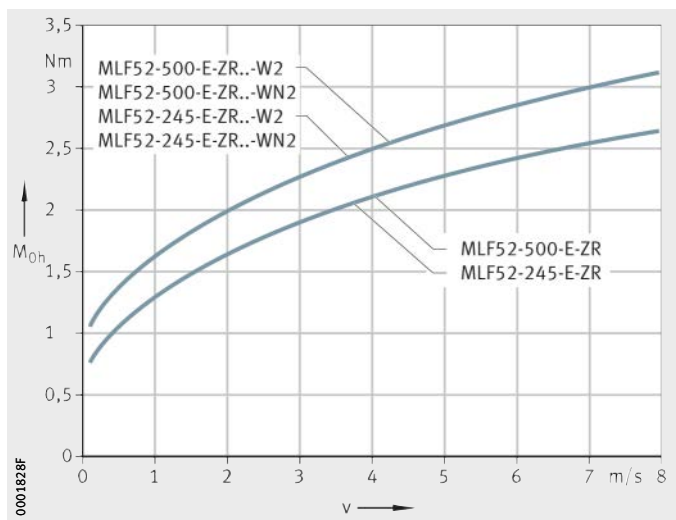

Figure 22
Idling drive torque
Horizontal mounting position

MLF52..-E-ZR
MLF52..-E-ZR..-W2
MLF52..-E-ZR..-WN2

v = travel velocity of carriage
M_{0v} = idling drive torque

Figure 23
Idling drive torque
Vertical mounting position

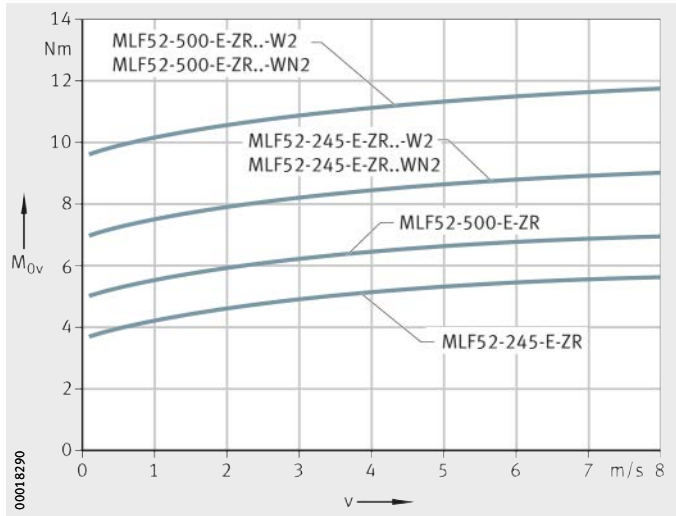

MLF52..-EE-ZR
MLF52..-EE-ZR..-W2
MLF52..-EE-ZR..-WN2

v = travel velocity of carriage
M_{0h} = idling drive torque

Figure 24
Idling drive torque
Horizontal mounting position

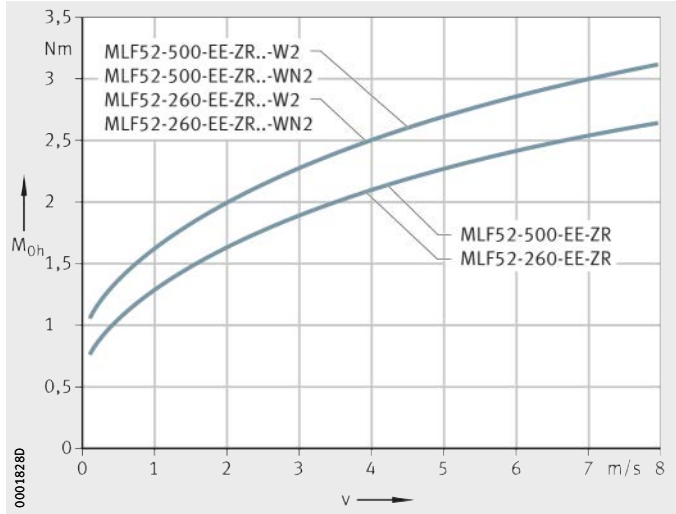

MLF52..-EE-ZR
MLF52..-EE-ZR..-W2
MLF52..-EE-ZR..-WN2

v = travel velocity of carriage
M_{0v} = idling drive torque

Figure 25
Idling drive torque
Vertical mounting position

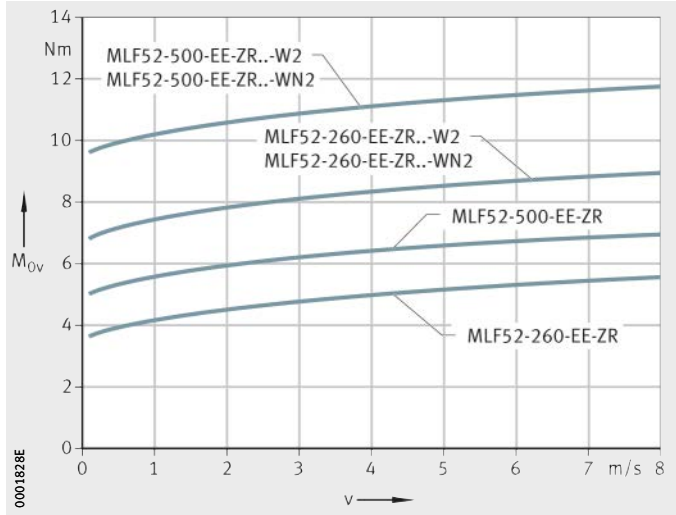

Length calculation of actuators

The length calculation of actuators is based on the required effective stroke length N_H. The effective stroke length N_H must be increased by the addition of safety spacing values on both sides of the travel distance. It is only if bellows are present that the effective length B_L must be added.

The total length L_{tot} of the actuator is determined from the support rail length L_2 and the lengths of the return units L_4. If two carriages are present, both carriage lengths L and the spacing L_{x1} must be taken into consideration.

Parameters for length calculation

G_H mm
Total stroke length

N_H mm
Effective stroke length

S mm
Safety spacing, for minimum values see table, page 87

L mm
Length of carriage

L_2 mm
Length of support rail

L_4 mm
Length of return unit

L_6 mm
Length of wiper brushes

L_{tot} mm
Total length of actuator

L_{x1} mm
Spacing between two carriages

B_L mm
Effective length of bellows

F_{BL} –
Effective length factor.

Total stroke length

The total stroke length G_H is determined from the required effective stroke length and the safety spacings, which must be at least 85 mm.

$$G_H = N_H + 2 \cdot S$$

Single-piece and multi-piece guideways

The maximum length of single-piece support rails is 8 000 mm. Longer support rails are supplied in units comprising several segments. The maximum length of a multi-piece support rail is 24 000 mm. Multi-piece support rails: the minimum length of a support rail segment is 500 mm. A maximum of three support rail segments is permissible.

Spacing L_{x1} between carriages

The minimum spacing L_{x1} between two carriages is 50 mm if the second carriage is driven (W2). If the second carriage is non-driven (WN2), the minimum spacing L_{x1} without bellows is 5 mm and with bellows it is 200 mm.

Total length L_{tot} and guideway length L_2

The following equations are designed for one and two carriages. The parameters and their position can be found in *Figure 26* and *Figure 27* as well as in the table, page 87.
If more than two carriages are present, please consult us.

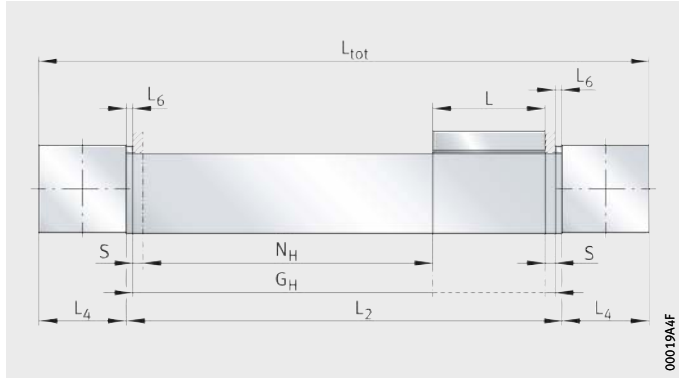

Figure 26
Length parameters for one carriage

One carriage without bellows

$$L_2 = G_H + L + 2 \cdot L_6$$

One carriage with bellows

$$L_2 = G_H \cdot F_{BL} + L + 25$$

Total length

$$L_{tot} = L_2 + 2 \cdot L_4$$

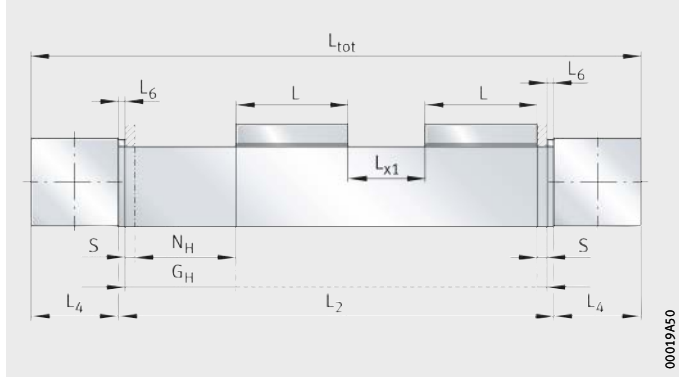

Figure 27
Length parameters for two carriages

Two carriages without bellows

$$L_2 = G_H + 2 \cdot L + L_{x1} + 2 \cdot L_6$$

Two carriages with bellows

$$L_2 = G_H \cdot F_{BL} + 2 \cdot L + L_{x1} + 25$$

Total length

$$L_{tot} = L_2 + 2 \cdot L_4$$

Length parameters

Designation	L mm	L_4 mm	L_6 mm	S mm	F_{BL}
MLF32-155-ZR	155	80	6	85	1,44
MLF32-300-ZR	300				
MLF52-200-ZR	200	115,5	6	85	1,37
MLF52-300-ZR	300				
MLF52-245-E-ZR	245	115,5	6	85	1,37
MLF52-500-E-ZR	500				
MLF52-260-EE-ZR	260	115,5	6	85	1,37
MLF52-500-EE-ZR	500				

Effective length of bellows

The effective length of bellows is the length occupied by the bellows in the fully compressed state. Calculation is based on the total stroke length G_H, *Figure 28*, equation.

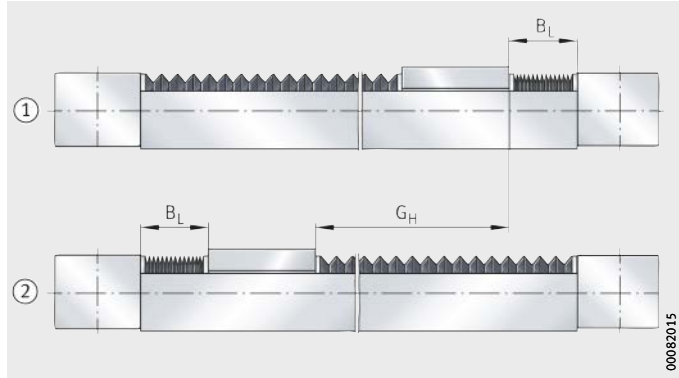

① Carriage against the right end stop
② Carriage against the left end stop

Figure 28
Effective length calculation

$$B_L = \frac{G_H \cdot (F_{BL} - 1) + 25}{2}$$

B_L mm
Effective length of bellows
G_H mm
Total stroke length
F_{BL} –
Effective length factor, see table, page 87.

The maximum length L_2 of support rails for actuators with bellows is 3 500 mm. Longer support rails with bellows are available by agreement.

Mass calculation

The total mass of an actuator is calculated from the mass of the actuator without a carriage, the carriage with the special design: multi-piece guideway (FA517), integrated gearbox (GTRI) and second carriage (W2, WN2), *Figure 29*. Insert the values from the table in the following equation. The values m_{LAW} and m_{BOL} are mandatory.

$$m_{tot} = m_{LAW} + m_{BOL} + m_1 + m_2 + m_3$$

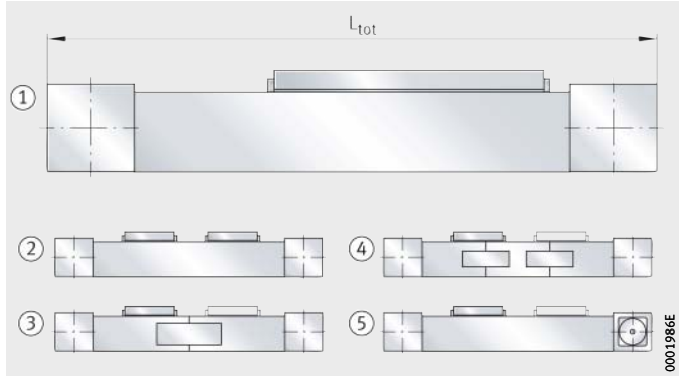

① Basic design
② Second carriage (W2, WN2)
③ Two-piece support rail (FA517.1)
④ Three-piece support rail (FA517.2)
⑤ Integrated gearbox (GTRI/4, GTRI/8)

Figure 29
Basic and additional designs

Values for mass calculation

Designation	Mass	
	Carriage m_{LAW} ≈kg	Actuator without carriage m_{BOL} ≈kg
MLF32-155-ZR	0,73	$(L_{tot} - 160) \cdot 0{,}0064 + 3{,}11$
MLF32-300-ZR	1,38	
MLF52-200-ZR	2	$(L_{tot} - 231) \cdot 0{,}0120 + 7{,}91$
MLF52-300-ZR	2,93	
MLF52-245-E-ZR	3,4	
MLF52-500-E-ZR	6,67	
MLF52-260-EE-ZR	4,12	
MLF52-500-EE-ZR	7,47	

Values for mass calculation (continued)

Designation	Mass Design				
	m_1		m_2		m_3
	FA517.1 ≈kg	FA517.2 ≈kg	GTRI/4 ≈kg	GTRI/8 ≈kg	W2 (WN2) ≈kg
MLF32-155-ZR	1,22	2,46	–	–	0,73
MLF32-300-ZR					1,38
MLF52-200-ZR	1,84	3,68	0,7	0,35	2
MLF52-300-ZR					2,93
MLF52-245-E-ZR					3,4
MLF52-500-E-ZR					6,67
MLF52-260-EE-ZR					4,12
MLF52-500-EE-ZR					7,47

Lubrication

The guidance system in linear actuators must be lubricated during operation.

The profiled track rollers sealed on both sides by gap seals are greased with a high quality lithium soap grease and the track roller sizes used are classified as lubricated for life.

The bearing arrangement of the toothed belt return units is maintenance-free.

Lubrication of the guideway

The raceways are lubricated by means of lubrication and wiper units containing oil-soaked felt inserts. These inserts are supplied from the factory already soaked with oil (H1 authorisation for the food industry).

The lubrication and wiper units are integrated in the MLF carriage and must be supplied with oil via lubrication nipples.

For relubrication of the guideway raceways, oils with a viscosity of 460 mm^2/s are recommended.

Relubrication intervals

The relubrication intervals are essentially dependent on the following factors:

- the travel velocity of the carriage
- the load
- the operating temperature
- the stroke length
- the environmental conditions and environmental influences
- the mounting position.

Lubrication intervals

The lubrication intervals are dependent on the environmental influences. The cleaner the environment, the smaller the quantity of lubricant consumed. The time and quantity can only be determined precisely under operating conditions since it is not possible to determine all the influences by calculation.
An observation period of adequate length must be allowed.

Fretting corrosion is a consequence of lubricant starvation and is visible as a reddish discolouration of the opposing raceway or the outer ring of the track roller. Lubricant starvation can lead to permanent damage to the system and therefore to its failure. It must be ensured that the lubrication intervals are reduced accordingly in order to prevent fretting corrosion.

When actuators are lubricated, the right and left lubrication point on each carriage must always be used. In order to ensure that a significant oil reserve is formed for dispensing oil to the raceways, all lubrication points on a carriage must always be used.

Relubrication quantities

Relubrication should be carried out wherever possible with several partial quantities at various times instead of the complete quantity at the time of the relubrication interval. Grease quantities, see table.

Grease quantities

Linear actuator	Relubrication quantity per lubrication nipple and per end face ≈g
MLF32..-ZR	1 to 2
MLF52..-ZR	2 to 3
MLF52..-E-ZR	2 to 3
MLF52..-EE-ZR	2 to 3

Relubrication procedure

Relubrication should be carried out whilst the carriage is moving and warm from operation over a minimum stroke length corresponding to one carriage length.

During lubrication, it must be ensured that the grease gun, grease, lubrication nipple and the environment of the lubrication nipple are clean.

Lubrication nipples for relubrication

In the case of actuators, the running shafts are relubricated by means of oil-soaked felt lubrication inserts in the lubrication and wiper units fitted on both end faces of the compact carriage, which can be reoiled via drive fit lubrication nipples NIP A1, *Figure 30*.

MLF..-ZR

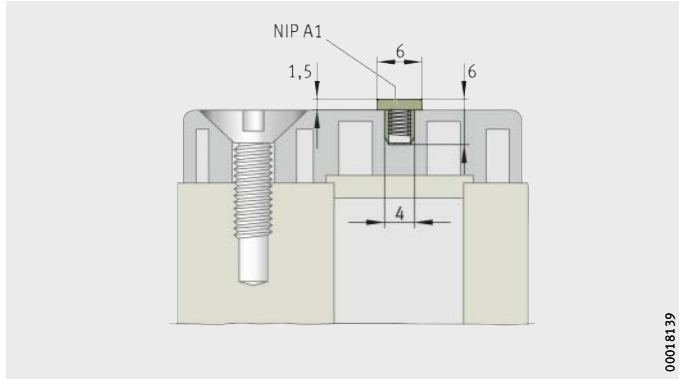

Figure 30
Mounting situation of the drive fit lubrication nipple NIP A1

Relubrication points

The felt lubrication inserts in the lubrication and wiper units fitted are reoiled via drive fit lubrication nipples NIP A1. Lubrication can be carried out from both end faces of the carriage, see table and *Figure 31*. All MLF sizes contain lubrication and wiper units each with two lubrication nipples in order to allow coating of both running shafts.

MLF..-ZR

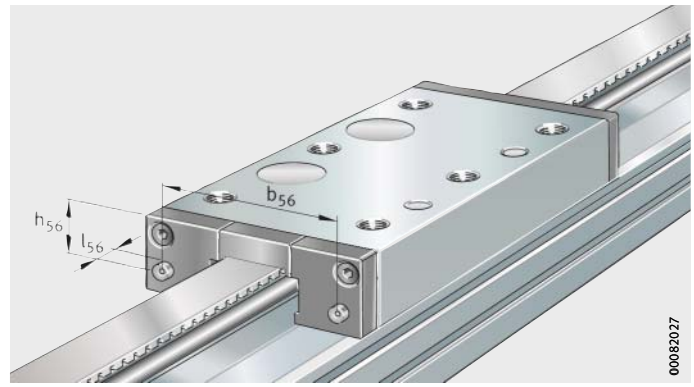

Figure 31
Lubrication points

Position of relubrication points

Designation		Mounting dimensions		
Actuator	Clamping actuator	b_{56} mm	h_{56} mm	l_{56} mm
MLF32..-ZR	MKLF32..-ZR	72,2	20,5	1,5
MLF52..-ZR	MKLF52..-ZR	105	29,2	1,5
MLF52..-E-ZR	MKLF52..-E-ZR	90	35,3	1,5
MLF52..-EE-ZR	MKLF52..-EE-ZR	90	35,3	1,5

T-slots

The slots in the support rail are designed for T-bolts according to DIN 787 and T-nuts according to DIN 508, *Figure 32*.
T-nuts and T-bolts are inserted using filling slots in the support rail.

MLF

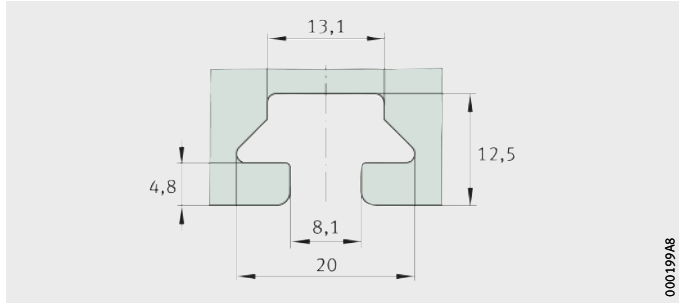

Figure 32
Dimensions of T-slots

Filling openings

The filling openings are located on three sides of the linear actuator: on both sides and underneath, *Figure 33*.

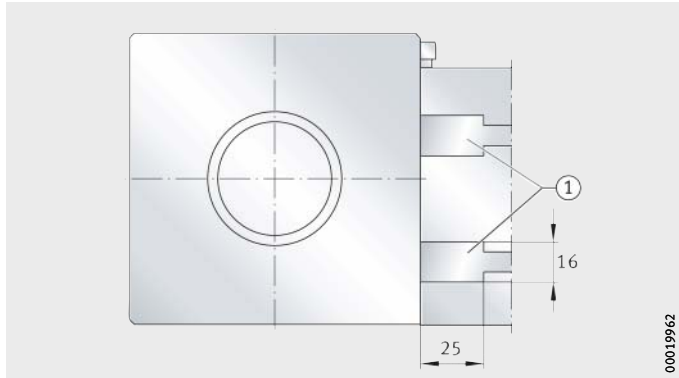

① Filling opening

Figure 33
Filling opening in support rail

Connectors for switching tags

Switching tags can be screw mounted to the carriage in order to activate switches. The position and size are dependent on the size, *Figure 34* and table.

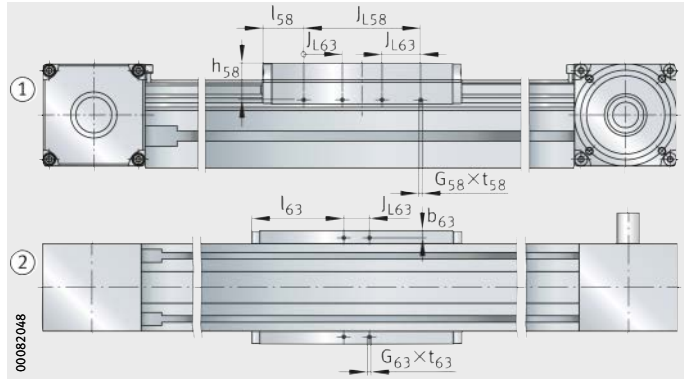

Figure 34
Connectors for switching tags on the carriage

Mounting dimensions for switching tags

Actuator	Mounting dimensions (both sides) Lateral			
	J_{L58} mm	J_{L63} mm	l_{58} mm	h_{58} mm
M(K)LF32-155-ZR	91	30	32	28,7
M(K)LF32-300-ZR			104,5	
M(K)LF52-200-ZR	120	–	40	41,1
M(K)LF52-300-ZR			90	
M(K)LF52-245-E-ZR	–	–	–	–
M(K)LF52-500-E-ZR				
M(K)LF52-260-EE-ZR	–	–	–	–
M(K)LF52-500-EE-ZR				

Mounting dimensions for switching tags (continued)

Actuator	Mounting dimensions (both sides)				
			Underside		
	G_{58} G_{63} mm	$t_{58\,max}$ $t_{63\,max}$ mm	J_{L63} mm	b_{63} mm	l_{63} mm
M(K)LF32-155-ZR	M3	10	–	–	–
M(K)LF32-300-ZR					
M(K)LF52-200-ZR	M3	10	30	3	85
M(K)LF52-300-ZR					135
M(K)LF52-245-E-ZR	M3	10	30	10,5	107,5
M(K)LF52-500-E-ZR					235
M(K)LF52-260-EE-ZR	M3	10	30	15,5	115
M(K)LF52-500-EE-ZR					235

Mounting position and mounting arrangement

Due to their construction and the linear guidance system fitted, actuators are suitable for all mounting positions and mounting arrangements. Possible mounting arrangements are shown starting *Figure 35*.

In addition to the horizontal mounting with the carriage facing “upwards” described as “common”, these actuators are also suitable in many cases for a vertical mounting position.

Mounting of actuators with a carriage to one side or suspended overhead is only possible under certain circumstances in the case of a longer stroke length or total stroke length. In such cases, please consult the Schaeffler engineering service.

The carriage and load must be secured against autonomous travel or dropping if the actuators are used in a vertical or tilted mounting position. This can be achieved, for example, by means of a brake or counterweight. The drop guard must function in manual operation as well as in motor operation, especially if the motor has no current.

Safety guidelines (especially in relation to personal protection) must be observed.

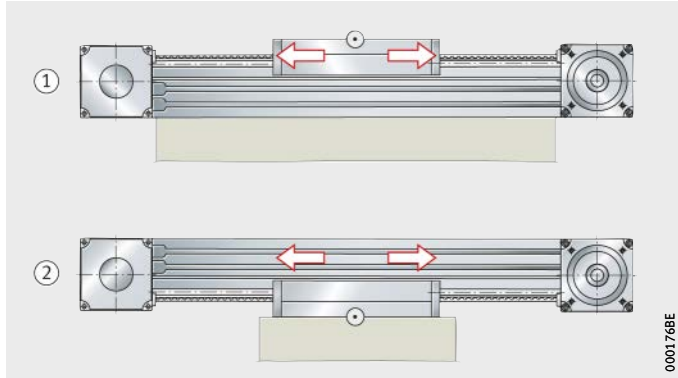

① Movable carriage
② Stationary carriage

Figure 35
Movable or stationary carriage

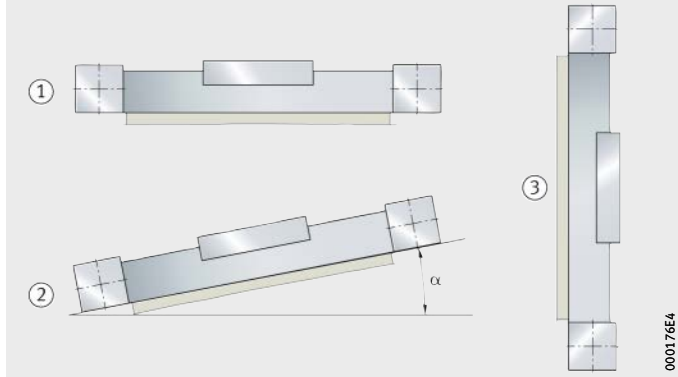

① Horizontal
② Tilted
③ Vertical

Figure 36
Mounting positions

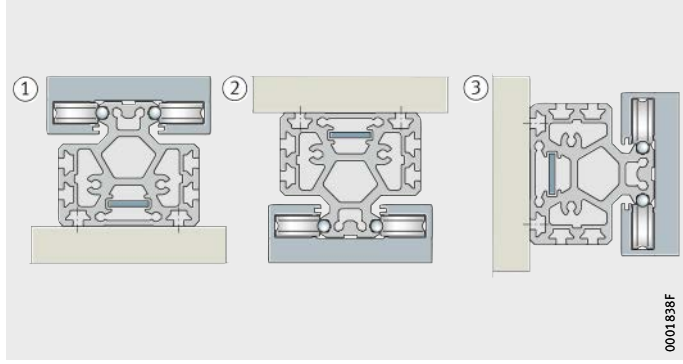

① Mounting position 0°
② Mounting position 180°
③ Mounting position 90°

Figure 37
Mounting positions

Mounting

The normal steps in the mounting of an actuator are as follows:

- location of the support rail on the adjacent construction
- mounting of the components to be moved on the carriage or carriages.

Actuators longer than 8 000 mm

Actuators longer than 8 000 mm are supplied as multi-piece units, *Figure 38*. These are supplied partially assembled after function checking. At their destination, these actuators must then be assembled in accordance with the fitting manual supplied.

Any parts necessary for joining of the support rail segments and screw mounting of the second return unit are also supplied. This include retaining plates, fixing screws, nuts and dowels.

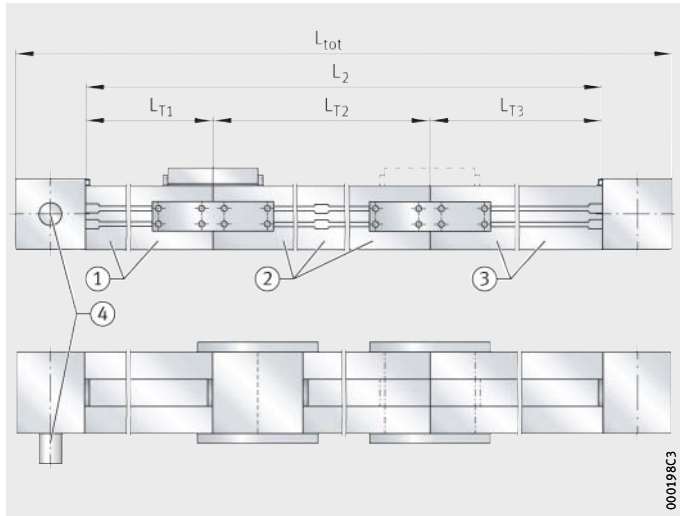

① Support rail segment 1, L_{T1} is always the first segment after the drive
② Support rail segment 2
③ Support rail segment 3
④ Drive

Figure 38
Actuators longer than 8 000 mm, L_{T1} is always on the drive side

Support rails in multi-piece actuators must be supported at their joints both during assembly and during operation.

Interchange of actuator components

For the fitting and assembly of actuator components, a fitting and maintenance manual is available for each series of actuator. Please consult the Schaeffler engineering service.

Maintenance

Failure to carry out maintenance, incorrect maintenance, assembly errors and lubrication errors as well as inadequate protection against contamination can lead to premature failure of actuators.

Maintenance work is restricted in general to relubrication, cleaning and regular visual inspection for damage.

Maintenance intervals, especially the intervals between relubrication, are influenced by:

- travel velocity
- load
- temperature
- stroke length
- environmental conditions and influences.

Guidance parts relevant to function must be greased and supplied with lubricant via appropriate lubrication points.

Cleaning

If heavy contamination is present, actuators must be cleaned in order to ensure reliable function. Suitable cleaning tools include paintbrushes, soft brushes and soft cloths.

Abrasives, petroleum ether and oils must not be used.

Accuracy
Length tolerances

The length tolerances of actuators are shown in *Figure 39* and the table.

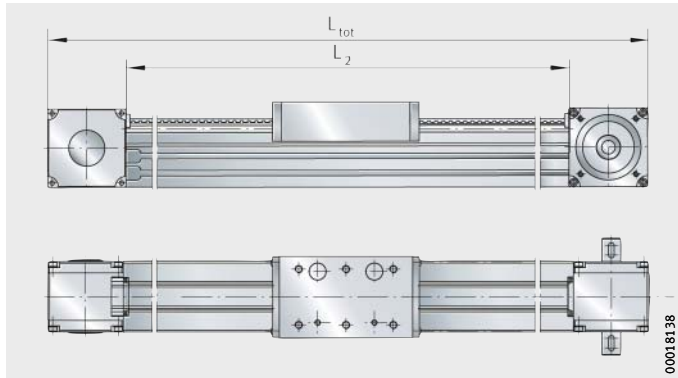

L_{tot} = total length
L_2 = length of support rail

Figure 39
Length tolerances

Tolerances

Total length L_{tot} of actuator mm		Tolerance mm
Single-piece actuator	$L_{tot} < 1000$	±2
	$1000 \leqq L_{tot} < 2000$	±3
	$2000 \leqq L_{tot} < 4000$	±4
	$4000 \leqq L_{tot}$	±5
Multi-piece actuator[1)]	$24000 \leqq L_{tot}$	±0,1% of L_{tot}

1) Not possible for actuators MLF52..-ZR..-GTRI and MKLF..-ZR.

Straightness of support rails

The support rails in actuators are precision straightened and the tolerances are better than DIN 17615.

The tolerances are arithmetic mean values and are stated for individual series and sizes, see table.

Tolerances

Length L_2 of support rail	MLF32..-ZR MKLF32..-ZR			MLF52..-ZR MKLF52..-ZR		
	t_2	t_3	Torsion	t_2	t_3	Torsion
mm	mm	mm	mm	mm	mm	mm
$L_2 \leqq 1\,000$	0,5	0,2	0,3	0,4	0,2	0,3
$1\,000 < L_2 \leqq 2\,000$	1	0,3	0,6	0,8	0,3	0,6
$2\,000 < L_2 \leqq 3\,000$	1,5	0,4	0,9	1,2	0,4	0,9
$3\,000 < L_2 \leqq 4\,000$	2	0,5	1,2	1,5	0,5	1,2
$4\,000 < L_2 \leqq 5\,000$	2,5	0,6	1,5	1,9	0,6	1,5
$5\,000 < L_2 \leqq 6\,000$	3	0,7	1,8	2,5	0,7	1,8
$6\,000 < L_2 \leqq 7\,000$	3,5	0,8	2,1	2,9	1	2,1
$7\,000 < L_2$	4	0,9	2,4	3,4	1,2	2,4

Figure 40 shows the method for determining the straightness of the support rail.

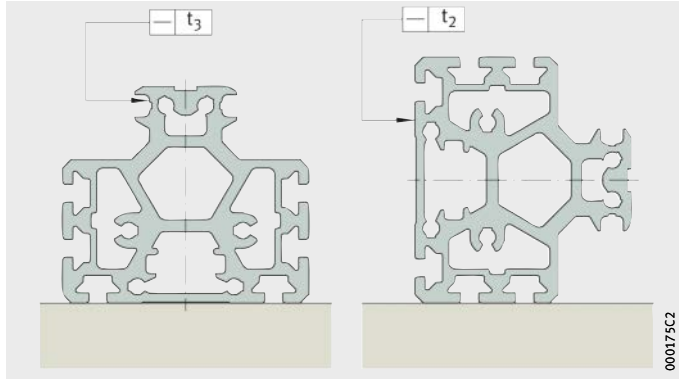

t_2, t_3 = straightness tolerance

Figure 40
Measurement method for straightness tolerances

Ordering example, ordering designation

Available designs of linear actuators MLF, see table.

Available designs

Design	Linear actuator with external track roller guidance system		
Size	Size code		
Carriage length	Length	L	mm
Type of drive	Toothed belt	ZR	
Drive variants	Drive shaft	●	
	Integrated planetary gearbox[1)]	GTRI	
Additional function	Integrated planetary gearbox[1)]	GTRI	
	Gear reduction ratio	i	
Additional, driven carriage	Second, driven carriage	W2	
	Spacing between carriages L_{x1}		mm
Additional, non-driven carriage	Second, non-driven carriage	WN2	
	Spacing between carriages L_{x1}		mm
Anti-corrosion protection[2)]	Corrosion-resistant design	RB	
Cover	Bellows	FBALG	
Location of carriage	Threaded holes		
Support rail	Single-piece		
	Two-piece[2)]	FA517.1	
	Support rail segment lengths	L_{T1}	mm
		L_{T2}	mm
	Three-piece[2)]	FA517.2	
	Support rail segment lengths	L_{T1}	mm
		L_{T2}	mm
		L_{T3}	mm
Lengths	Total length	L_{tot}	mm
	Total stroke length	G_H	mm

● Standard scope of delivery.

■ Design not available.

1) Not suitable for combination with multi-piece support rail.

2) Not suitable for combination with integrated planetary gearbox (GTRI).

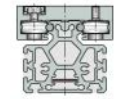

Designation and suffixes MLF			
32	52	52-E	52-EE
155, 300	200, 300	245, 500	260, 500
ZR	ZR	ZR	ZR
AL, AR, RL, AL-AL, AL-AR, AL-RL, AR-AL, AR-AR, AR-RL, RL-AL, RL-AR, RL-RL, OZ			
■	AL, AR, AL-AL, AL-AR, AL-RL, AR-AL, AR-AR, AR-RL		
■	GTRI	GTRI	GTRI
■	4; 8	4; 8	4; 8
W2	W2	W2	W2
State value for L_{x1} ($L_{x1} \geqq 50$ mm)			
WN2	WN2	WN2	WN2
State value for L_{x1} $L_{x1} \geqq 5$ mm for actuators without bellows, $L_{x1} \geqq 20$ mm for actuators with bellows			
RB	RB	RB	RB
FBALG	FBALG	FBALG	FBALG
●	●	●	●
●	●	●	●
FA517.1			
State value for L_{T1} and L_{T2}, see page 106. If these lengths are not stated, L_{T1} and L_{T2} will be determined by Schaeffler.			
FA517.2			
State value for L_{T1}, L_{T2} and L_{T3}, see page 106. If these lengths are not stated, L_{T1}, L_{T2} and L_{T3} will be determined by Schaeffler.			
to be calculated from total stroke length, see page 86			
to be calculated from effective stroke length, see page 86			

External track roller guidance system, toothed belt drive

Linear actuator with external track roller guidance system	MLF
Size code	52
Carriage length L	200 mm
Drive by toothed belt	ZR
Drive shaft on left side	AL
Carriage with threaded holes	–
Three-piece support rail with support rail segment lengths $L_{T1} = L_{T2} = L_{T3} = 5\,504$ mm	FA517.2
Total length L_{tot}	16 743 mm
Total stroke length G_H	16 300 mm

Ordering designation

MLF52-200-ZR-AL-FA517.2/16743-16300
($L_{T1} = L_{T2} = L_{T3} = 5\,504$ mm), *Figure 41*

Note total length of carriage. Support rail segment lengths L_{T1}, L_{T2} and L_{T3} must be stated.

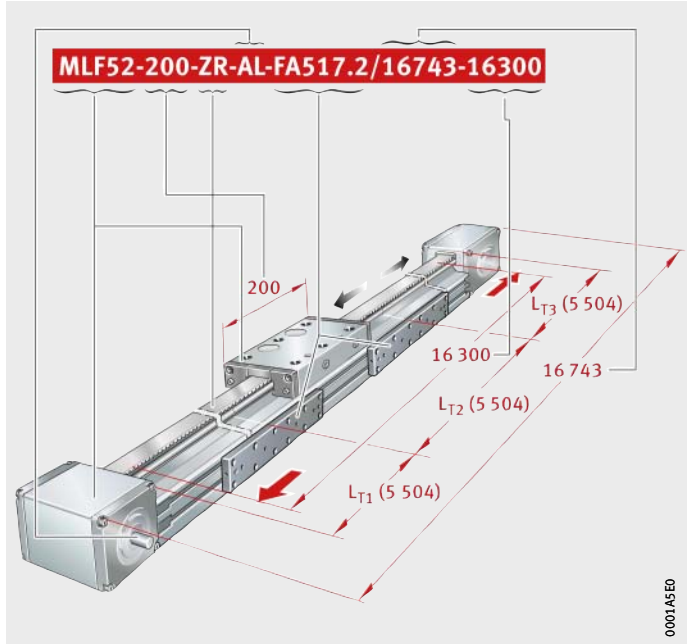

Figure 41
Ordering designation

External track roller guidance system, toothed belt drive, planetary gearbox

Linear actuator with external track roller guidance system	MLF
Size code	52
Carriage length L	200 mm
Drive by toothed belt	ZR
Drive shaft on left side	AL
Integrated gearbox	GTRI
Gear reduction ratio	8
Second, non-driven carriage	WN2
Spacing between carriages L_{x1}	300 mm
Carriage with threaded holes	–
Total length L_{tot}	7 243 mm
Total stroke length G_H	6 300 mm

Ordering designation **MLF52-200-ZR-AL-GTRI/8-WN2/7243-6300**
(L_{x1} = 300 mm), *Figure 42*

Note total length of carriage. Spacing L_{x1} between carriages must be stated.

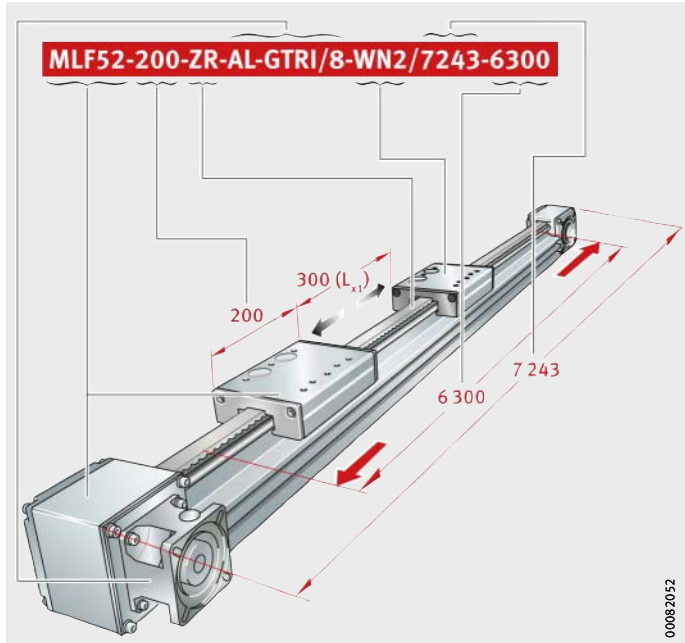

Figure 42
Ordering designation

Actuators

External track roller guidance system
Toothed belt drive
Basic design
Bellows (FBALG)

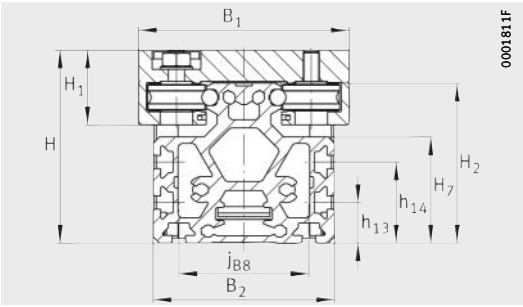

MLF..-ZR

Dimension table · Dimensions in mm

Designation	Dimensions			Mounting dimensions												
	B_1	H	L	B_2	B_4	B_{72}	D_{86} G7	D_{87}	d_{85} h7	d_{86}	G_{43}	G_{87}	H_1	H_2	H_4	H_7
MLF32-155-ZR	86	82	155	75	74	2	70	80	20	61	M8	M6	32	66,5	81,5	47
MLF32-300-ZR			300													
MLF52-200-ZR	130	119	200	112	111	2	95	115	20	76	M10	M8	46,1	98,6	118,3	65,4
MLF52-300-ZR			300													
MLF52-245-E-ZR	145	125	245	112	111	2	95	115	20	76	M10	M8	53,8	98,6	118,3	65,4
MLF52-500-E-ZR			500													
MLF52-260-EE-ZR	155	125	260	112	111	2	95	115	20	76	M12	M8	55	98,6	118,3	65,4
MLF52-500-EE-ZR			500													

Calculation of lengths L_2 and L_{tot}, see page 86.

1) Only for actuators without bellows.

2) ① Drive fit lubrication nipple NIP A1, see page 92.
② Filling openings in carrier profile, see page 93.
③ Switching tag connectors on carriage, see page 94.

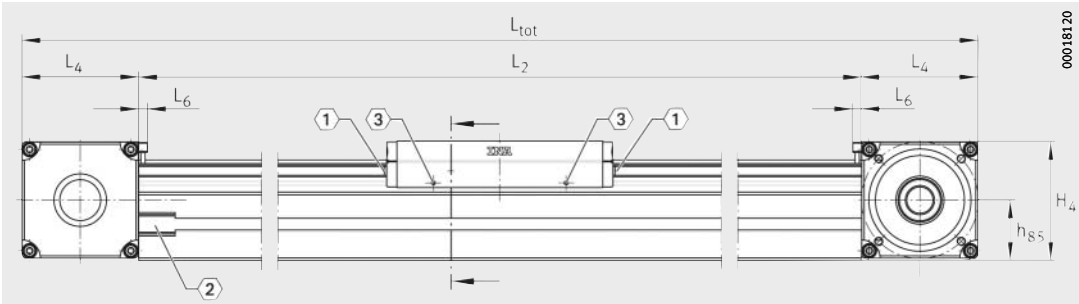

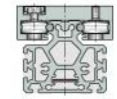

MLF..-ZR
1, 2, 3 [2)]

h_{13}	h_{14}	h_{85} ±0,5	J_{B43} ±0,1	J_{L43}	J_{L44}	j_{B8}	L_4	L_6 [1)]	L_{88}	N_{B85}	N_{L85}	N_{T85}	T_{86}	t_{43} max.	t_{87} max.
25	–	41,5	59	100	– 245	43	80	6	25	6^{P9}	16	3,5	$2,3^{+0,3}$	14	12
25	50	60,6	90	110	– 210	80	115,5	6	31	6^{P9}	25	3,5	$4^{+0,5}$	20	15
25	50	60,6	105	160	– 415	80	115,5	6	31	6^{P9}	25	3,5	$4^{+0,5}$	24	15
25	50	60,6	115	180	– 420	80	115,5	6	31	6^{P9}	25	3,5	$4^{+0,5}$	24	15

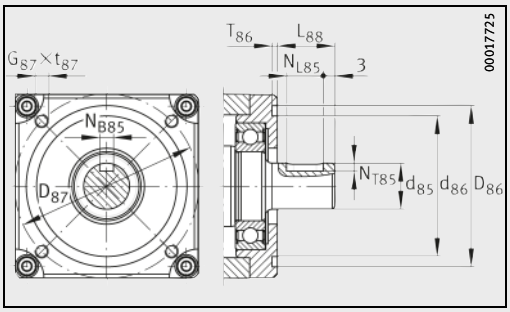

MLF..-ZR · Drive flange, drive shaft

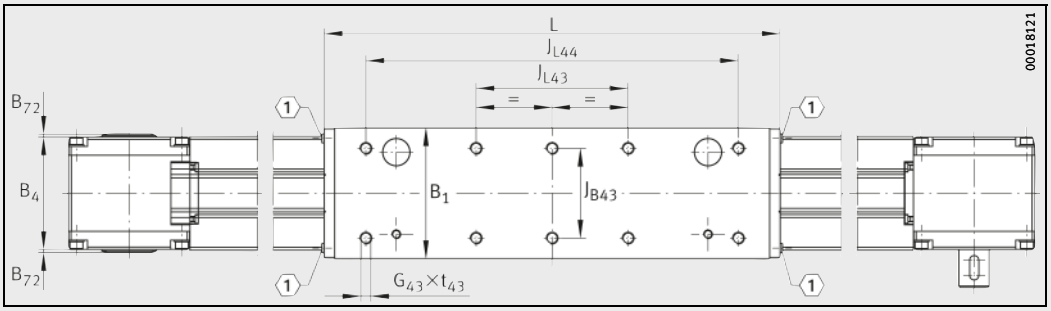

MLF..-ZR · Top view
1 [2)]

Actuators

External track roller guidance system
Toothed belt drive
Multi-piece support rail

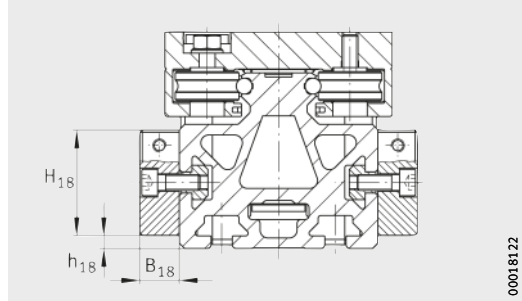

MLF32..-ZR..-FA517
MLF52..-ZR..-FA517

Dimension table · Dimensions in mm

Designation		Mounting dimensions			
Two segments	Three segments	B_{18}	H_{18}	h_{18}	L_{18}
MLF32-155-ZR-FA517.1	**MLF32-155-ZR-FA517.2**	15	40	5	300
MLF32-300-ZR-FA517.1	**MLF32-300-ZR-FA517.2**				
MLF52-200-ZR-FA517.1	**MLF52-200-ZR-FA517.2**	15	45	15	400
MLF52-300-ZR-FA517.1	**MLF52-300-ZR-FA517.2**				
MLF52-245-E-ZR-FA517.1	**MLF52-245-E-ZR-FA517.2**	15	45	15	400
MLF52-500-E-ZR-FA517.1	**MLF52-500-E-ZR-FA517.2**				
MLF52-260-EE-ZR-FA517.1	**MLF52-260-EE-ZR-FA517.2**	15	45	15	400
MLF52-500-EE-ZR-FA517.1	**MLF52-500-EE-ZR-FA517.2**				

Other geometrical features, see page 104 and page 105.

1) Support rails: segment lengths (L_{Tn} ≧ 500 mm), see page 86.

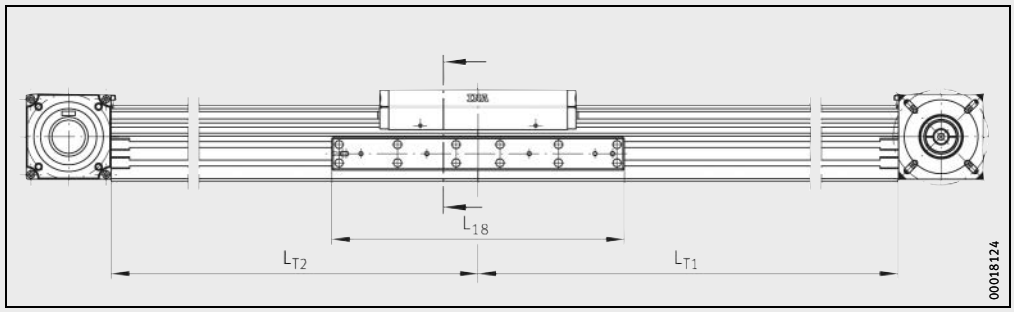

MLF..-ZR..-FA517.1 · Two segments[1)]

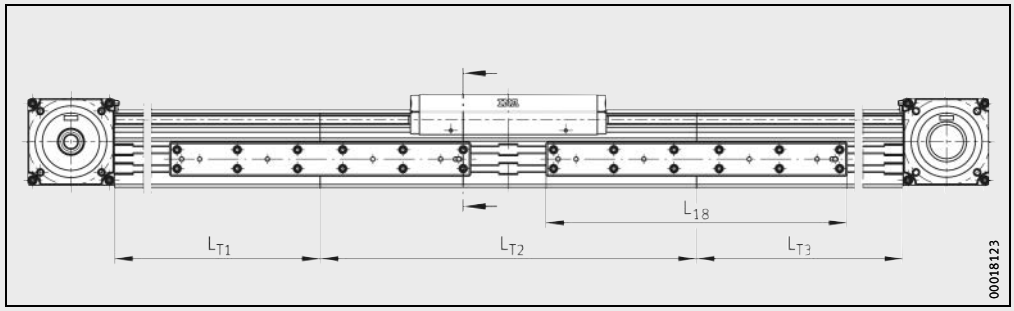

MLF..-ZR..-FA517.2 · Three segments[1)]

Actuators

External track roller guidance system
Toothed belt drive
Integrated planetary gearbox

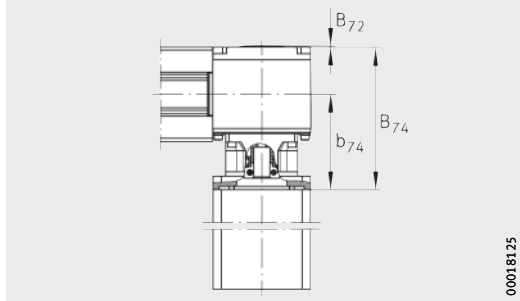

MLF52..-ZR..-GTRI

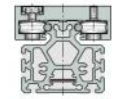

Dimension table · Dimensions in mm

Designation	Dimensions of planetary gearbox										
	B_{72}	B_{74}	b_{74}	D_{85} F7 max.	D_{86} F10	D_{87} min.	D_{87} max.	d_{87}	H_{74}	T_{85} max.	T_{87}
MLF52-200-ZR-GTRI/4	2	168	112,5	19	100	102	130	8,5	115	50,5	16
MLF52-200-ZR-GTRI/8		158	102,5	14	80	85	100	6,6	85	40,5	10
MLF52-300-ZR-GTRI/4	2	168	112,5	19	100	102	130	8,5	115	50,5	16
MLF52-300-ZR-GTRI/8		158	102,5	14	80	85	100	6,6	85	40,5	10
MLF52-245-E-ZR-GTRI/4	2	168	112,5	19	100	102	130	8,5	115	50,5	16
MLF52-245-E-ZR-GTRI/8		158	102,5	14	80	85	100	6,6	85	40,5	10
MLF52-500-E-ZR-GTRI/4	2	168	112,5	19	100	102	130	8,5	115	50,5	16
MLF52-500-E-ZR-GTRI/8		158	102,5	14	80	85	100	6,6	85	40,5	10
MLF52-260-EE-ZR-GTRI/4	2	168	112,5	19	100	102	130	8,5	115	50,5	16
MLF52-260-EE-ZR-GTRI/8		158	102,5	14	80	85	100	6,6	85	40,5	10
MLF52-500-EE-ZR-GTRI/4	2	168	112,5	19	100	102	130	8,5	115	50,5	16
MLF52-500-EE-ZR-GTRI/8		158	102,5	14	80	85	100	6,6	85	40,5	10

Other geometrical features, see page 104 and page 105.

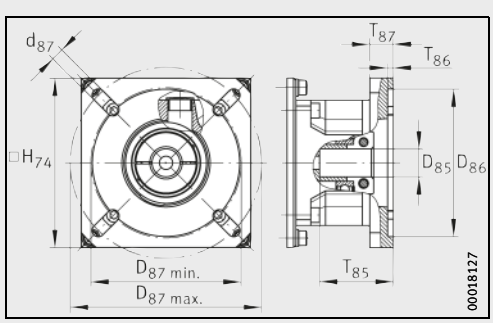

Planetary gearbox with reduction ratio i = 4
with drive flange

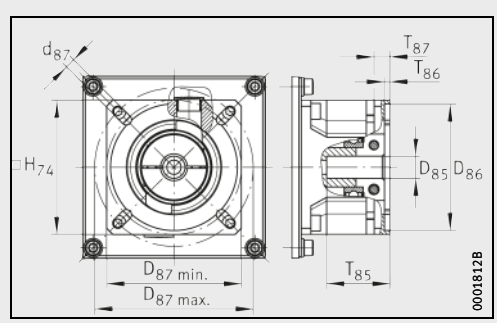

Planetary gearbox with reduction ratio i = 8
with drive flange

Actuators

External track roller guidance system
Toothed belt drive
Second, driven carriage
Second, non-driven carriage

Dimension table · Dimensions in mm

Second, driven carriage			Second, non-driven carriage		
Designation	With bellows $L_{x1\ min}$	Without bellows $L_{x1\ min}$	Designation	With bellows $L_{x1\ min}$	Without bellows $L_{x1\ min}$
MLF32-155-ZR-W2	50	50	**MLF32-155-ZR-WN2**	20	5
MLF32-300-ZR-W2	50	50	**MLF32-300-ZR-WN2**	20	5
MLF52-200-ZR-W2	50	50	**MLF52-200-ZR-WN2**	20	5
MLF52-300-ZR-W2	50	50	**MLF52-300-ZR-WN2**	20	5
MLF52-245-E-ZR-W2	50	50	**MLF52-245-E-ZR-WN2**	20	5
MLF52-500-E-ZR-W2	50	50	**MLF52-500-E-ZR-WN2**	20	5
MLF52-260-EE-ZR-W2	50	50	**MLF52-260-EE-ZR-WN2**	20	5
MLF52-500-EE-ZR-W2	50	50	**MLF52-500-EE-ZR-WN2**	20	5

Other geometrical features, see page 104 and page 105.

1) L_{x1} = spacing between carriages, $L_{x1\ min}$ = minimum spacing between two carriages.

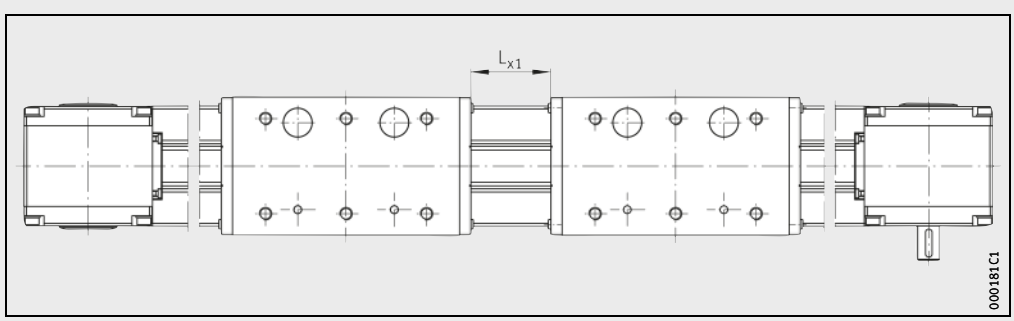

MLF..-ZR-W2, MLF..-ZR-WN2[1)]

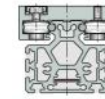

Actuators

External track roller guidance system
Toothed belt drive
Performance data

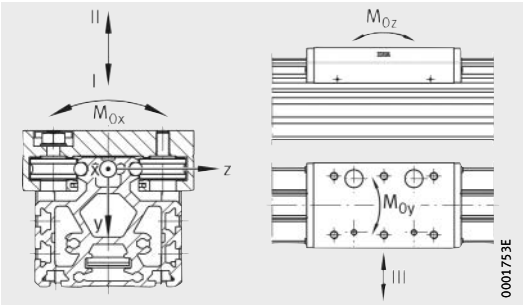

Load directions

Performance data

Designation	Carriage guidance system for each carriage								
	Basic load ratings per carriage						Permissible static moment ratings per carriage[1]		
	Load direction I Compressive load		Load direction II Tensile load		Load direction III Lateral load				
	dyn. C N	stat. C_0 N	dyn. C N	stat. C_0 N	dyn. C N	stat. C_0 N	$M_{0x\ per}$ Nm	$M_{0y\ per}$ Nm	$M_{0z\ per}$ Nm
MLF32-155-ZR (-W2, -WN2, -FA517)	4 100	2 400	4 100	2 400	6 600	4 200	30	130	70
MLF32-300-ZR (-W2, -WN2, -FA517)								425	210
MLF52-200-ZR (-W2, -WN2, -FA517)	10 000	5 200	10 000	5 200	16 800	10 000	110	290	150
MLF52-200-ZR-GTRI/4 (-W2, -WN2)									
MLF52-200-ZR-GTRI/8 (-W2, -WN2)									
MLF52-300-ZR (-W2, -WN2, -FA517)	10 000	5 200	10 000	5 200	16 800	10 000	110	760	390
MLF52-300-ZR-GTRI/4 (-W2, -WN2)									
MLF52-300-ZR-GTRI/8 (-W2, -WN2)									
MLF52-245-E-ZR (-W2, -WN2, -FA517)	17 800	8 900	17 800	8 900	28 400	15 500	180	800	460
MLF52-245-E-ZR-GTRI/4 (-W2, -WN2)									
MLF52-245-E-ZR-GTRI/8 (-W2, -WN2)									
MLF52-500-E-ZR (-W2, -WN2, -FA517)	17 800	8 900	17 800	8 900	28 400	15 500	180	3 050	1 670
MLF52-500-E-ZR-GTRI/4 (-W2, -WN2)									
MLF52-500-E-ZR-GTRI/8 (-W2, -WN2)									
MLF52-260-EE-ZR (-W2,-WN2, -FA517)	20 000	10 000	20 000	10 000	32 400	18 200	215	1 100	620
MLF52-260-EE-ZR-GTRI/4 (-W2, -WN2)									
MLF52-260-EE-ZR-GTRI/8 (-W2, -WN2)									
MLF52-500-EE-ZR (-W2, -WN2, -FA517)	20 000	10 000	20 000	10 000	32 400	18 200	215	3 100	1 650
MLF52-500-EE-ZR-GTRI/4 (-W2, -WN2)									
MLF52-500-EE-ZR-GTRI/8 (-W2, -WN2)									

Optionally available by agreement with bellows (FBALG).

1) The values are single loads and apply when the underside of the actuator is fully supported.
If there are several carriages per actuator or combined loads are present, these must be reduced.

2) Maximum permissible drive torque on drive stud.

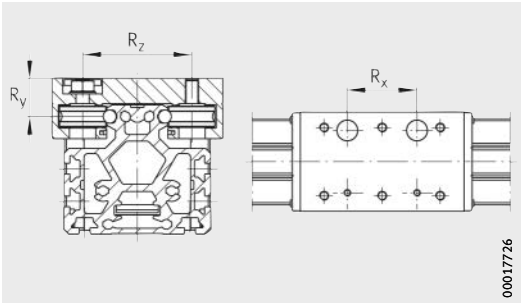

Mounting geometry of track rollers

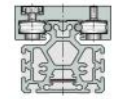

Track rollers	Spacings R_x mm	Spacings R_y mm	Spacings R_z mm	Moment of inertia of area of carrier profile I_y cm^4	Moment of inertia of area of carrier profile I_z cm^4	Drive: Feed per revolution mm	Drive: Maximum drive torque[2)] Nm	Toothed belt: Type	Toothed belt: Mass m kg/m	Toothed belt: Permissible operating force N	Toothed gears and gearboxes: Mass moment of inertia $kg \cdot cm^2$
4×LFR50/8-6-2Z	60	20,5	54	104	76	175	18	20AT5	0,068	640	2,2
	205										
4×LFR5201-10-2Z	60	29,3	83	386	301	270	73,5	32AT10	0,2	1 750	12,6
						67,5	18				2,54
						33,75	7,5				0,85
4×LFR5201-10-2Z	160	29,3	83	386	301	270	73,5	32AT10	0,2	1 750	12,6
						67,5	18				2,54
						33,75	7,5				0,85
4×LFR5301-10-2Z	105	35,3	90	386	301	270	73,5	32AT10	0,2	1 750	12,6
						67,5	18				2,54
						33,75	7,5				0,85
4×LFR5301-10-2Z	360	35,3	90	386	301	270	73,5	32AT10	0,2	1 750	12,6
						67,5	18				2,54
						33,75	7,5				0,85
4×LFR5302-10-2Z	120	35,3	95	386	301	270	73,5	32AT10	0,2	1 750	12,6
						67,5	18				2,54
						33,75	7,5				0,85
4×LFR5302-10-2Z	360	35,3	95	386	301	270	73,5	32AT10	0,2	1 750	12,6
						67,5	18				2,54
						33,75	7,5				0,85

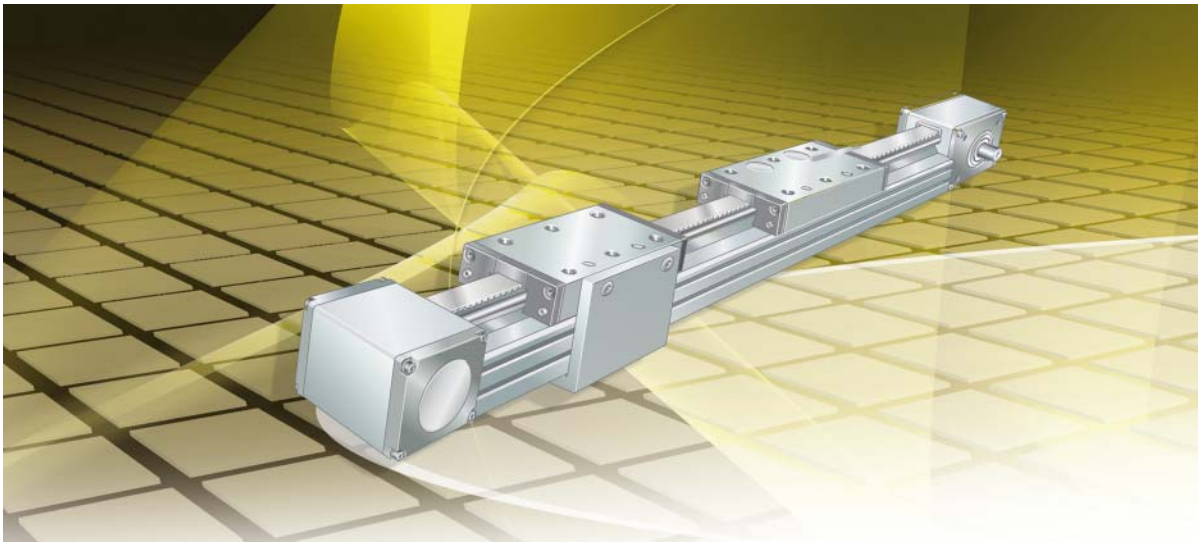

Clamping actuators with external track roller guidance system

Toothed belt drive

Clamping actuators with external track roller guidance system

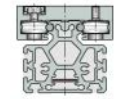

Clamping actuators with external track roller guidance system

Basic design

External
track roller guidance system
Toothed belt drive

MKLF..-ZR

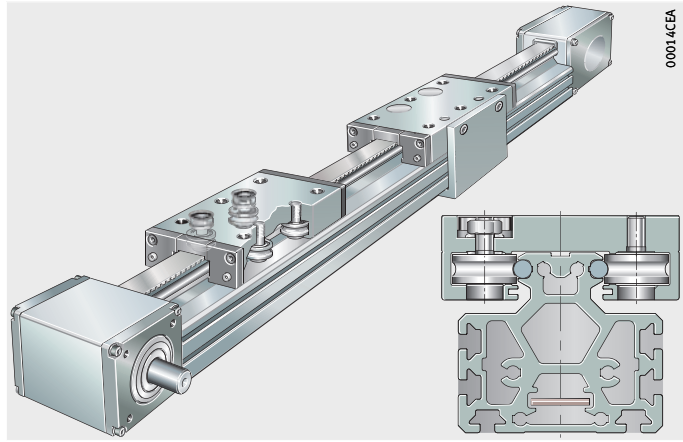

External
track roller guidance system
Toothed belt drive
Integrated planetary gearbox

MKLF52..-ZR..-GTRI

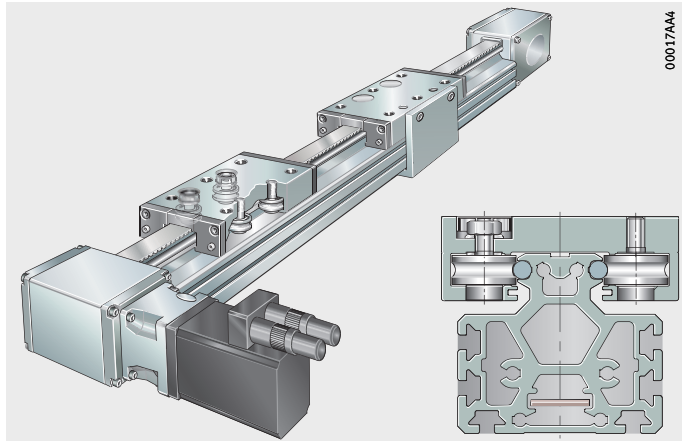

Clamping actuators with external track roller guidance system

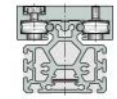

Features

Actuators MKLF..-ZR are designed for special applications and correspond in their basic design and technical characteristics to the actuators MLF..-ZR. While the carriages in the linear actuator always travel in the same direction, clamping actuators have two carriages moving in synchronised opposing directions.

With the exception of the special designs, the information on the features of clamping actuators matches the information on the features of linear actuators, see page 71.

Designs

Clamping actuators of series MKLF..-ZR are available in various designs, see table. The possible designs and combinations vary according to the size and actuator type.

Available designs

Suffix	Description	Design
–	Two carriages moving in opposing directions	Basic design
GTRI	Integrated planetary gearbox	Standard
RB	Corrosion-resistant design	Special design

Special designs

Special designs are available by agreement. Examples of these are clamping actuators:

- with an additional, non-driven carriage
- with an additional, non-driven carriage of different length and/or wide carriage
- with several driven and non-driven carriages (of different length and/or wide carriage)
- with reinforced or antistatic toothed belt or toothed belt of high temperature design
- with T-strips inserted in the T-slots of the support rail
- with bellows resistant to welding beads
- with extended carriages
- with a compressed air connection in the return units
- with a drive stud of special dimensions
- with special machining.

Clamping actuators
with external track roller guidance system

Drive

The actuators are available without a drive shaft as well as with a drive shaft on the left side, right side or passing through the unit, see table. Possible combinations and drive variants, see also page 115.

Suffixes

Drive variants	Suffix
Drive shaft on left side	AL
Drive shaft on right side	AR
No drive shaft	OZ
Drive shaft on both sides (left and right)	RL

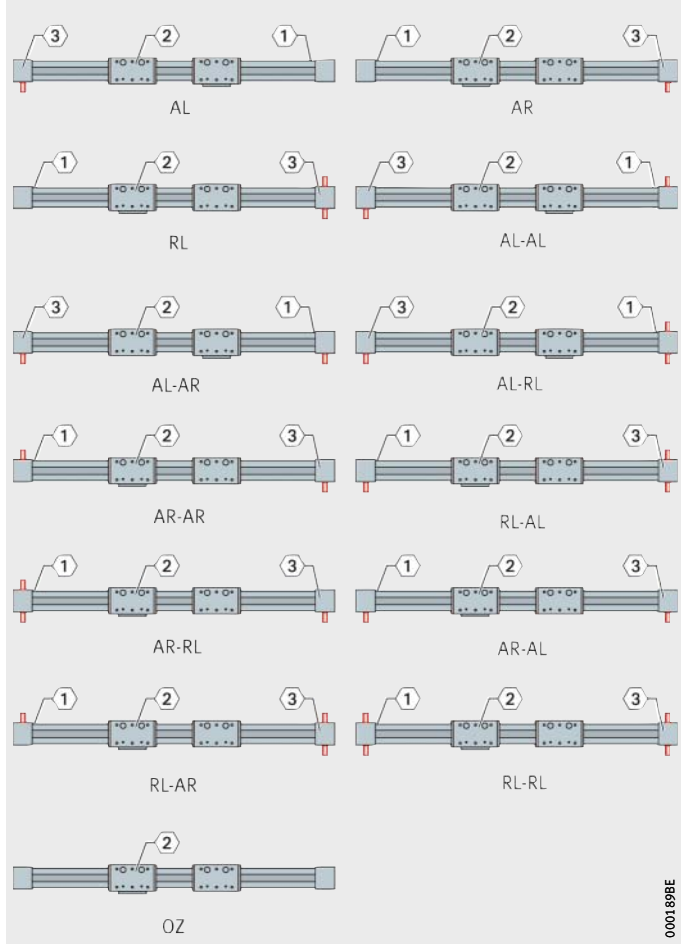

(1) Filling slot for T-nuts and T-bolts
(2) Reference side (carriage side with eccentric bolts)
(3) Drive and marking side

Figure 1
Drive variants

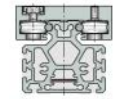

Mechanical accessories

A large number of accessories are available for clamping actuators with external track roller guidance system. The allocation of accessories, see table, is valid if the data match the Technical principles, page 13, and the Design and safety guidelines, page 118.

Allocation

Linear actuator	MKLF..-ZR	
Size	32	52
Fixing brackets, see page 811		
WKL-48×48×35	①	②
WKL-65×65×35	–	①
WKL-65×65×30-N	–	③
WKL-65×65×35-N	–	①
Clamping lugs, see page 829		
SPPR-28×30	①	①
T-nuts, see page 835		
MU-DIN 508 M6×8	④	④
MU-M4×8 (similar to DIN 508)	④	④
T-nut made from corrosion-resistant steel, see page 835		
MU-DIN 508 M6×8-RB	④	④
T-bolts, see page 835		
SHR DIN 787-M8×8×32	④	④
Rotatable T-nuts, see page 836		
MU-M4×8-RHOMBUS	④	④
MU-M6×8-RHOMBUS	④	④
Positionable T-nuts, see page 836		
MU-M4×8-POS	④	④
MU-M5×8-POS	④	④
MU-M6×8-POS	④	④
MU-M8×8-POS	④	④
Hexagon nuts, see page 837		
MU-ISO 4032 M8	④	④
T-strips, see page 837		
LEIS-M6/8-T-NUT-SB-ST	⑥	⑥
LEIS-M8/8-T-NUT-SB-ST	⑥	⑥
LEIS-M6/8-T-NUT-HR-ST	④⑤	④⑤
LEIS-M6/8-T-NUT-HR-ALU	④	④
LEIS-M6/8-T-NUT-ST	④	⑤
Connector sets (parallel connectors), see page 838		
VBS-PVB8	④	④
VBS-PVB8/10	④	④
Slot closing strips, see page 838		
NAD-8×4,5	④	④
NAD-8×11,5	④	④

① Suitable.
② Only for the lowest lateral T-slot in the support rail.
③ Only with M5 screws, only in the lateral T-slots in the support rail.
④ For T-slots in the support rail.
⑤ T-strips must already have been inserted at the time of despatch.
⑥ Swivel type T-strip.

Design and safety guidelines

See section Actuators with external track roller guidance system, page 68. The following pages describe exclusively the differences between the clamping actuators MKLF and the linear actuators MLF.

Idling drive torque

The idling drive torque M_0 of linear actuators is calculated for a constant velocity and for a horizontal (M_{0h}) or vertical (M_{0v}) mounting position, starting *Figure 2*. The idling drive torque increases with increasing travel velocity. The data in the diagrams are maximum values.

MKLF32..-ZR

v = travel velocity of carriage
M_{0h} = idling drive torque

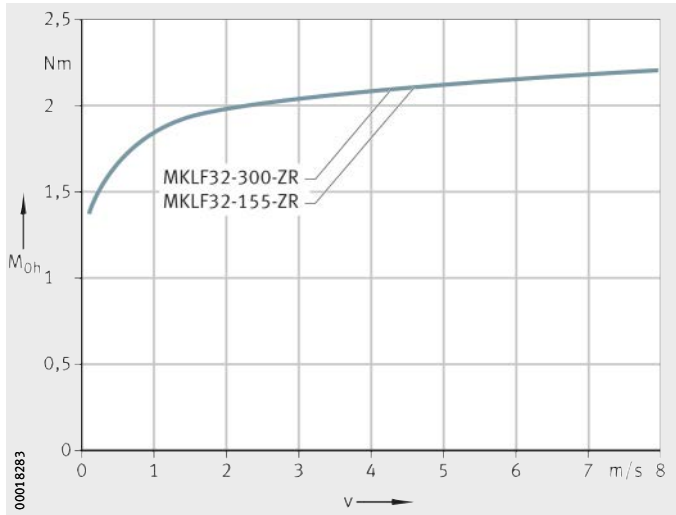

Figure 2
Idling drive torque
Horizontal mounting position

MKLF32..-ZR

v = travel velocity of carriage
M_{0v} = idling drive torque

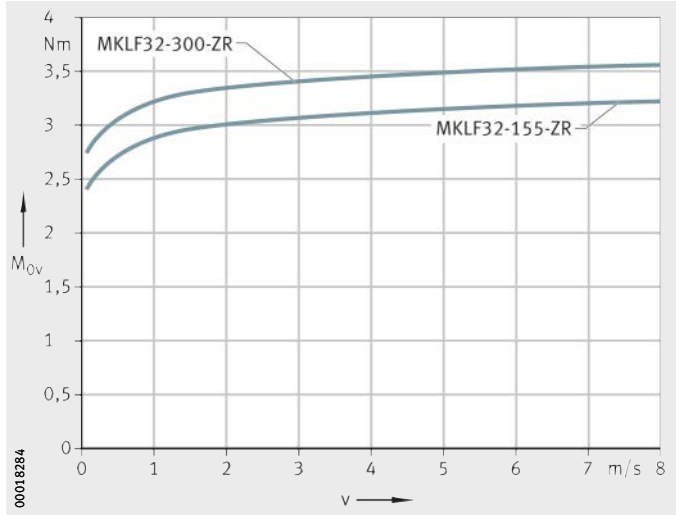

Figure 3
Idling drive torque
Vertical mounting position

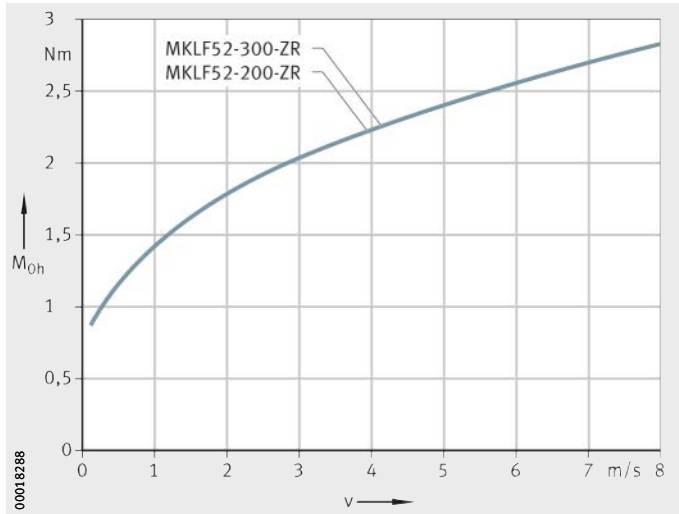

MKLF52-300-ZR
MKLF52-200-ZR

v = travel velocity of carriage
M_{0h} = idling drive torque

Figure 4
Idling drive torque
Horizontal mounting position

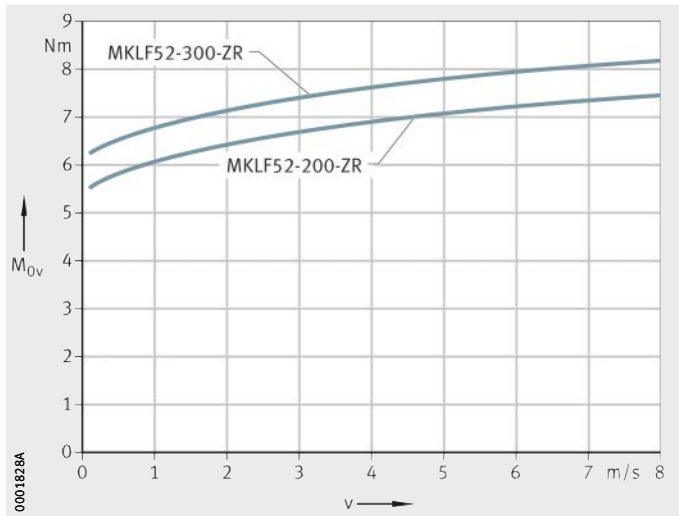

MKLF52-300-ZR
MKLF52-200-ZR

v = travel velocity of carriage
M_{0v} = idling drive torque

Figure 5
Idling drive torque
Vertical mounting position

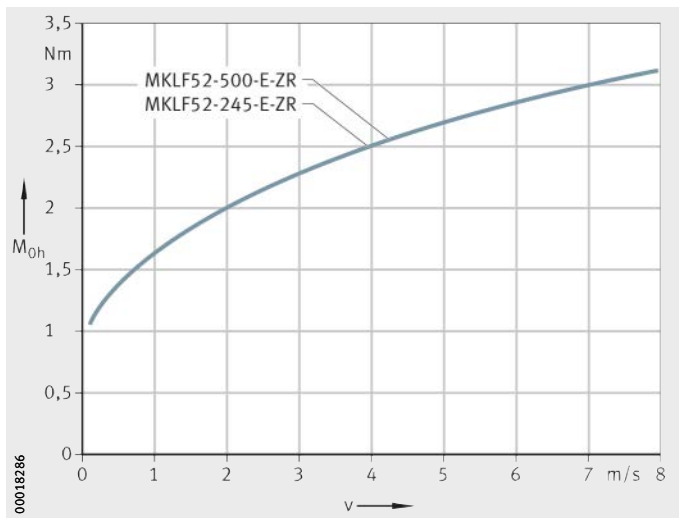

MKLF52-500-E-ZR
MKLF52-245-E-ZR

v = travel velocity of carriage
M_{0h} = idling drive torque

Figure 6
Idling drive torque
Horizontal mounting position

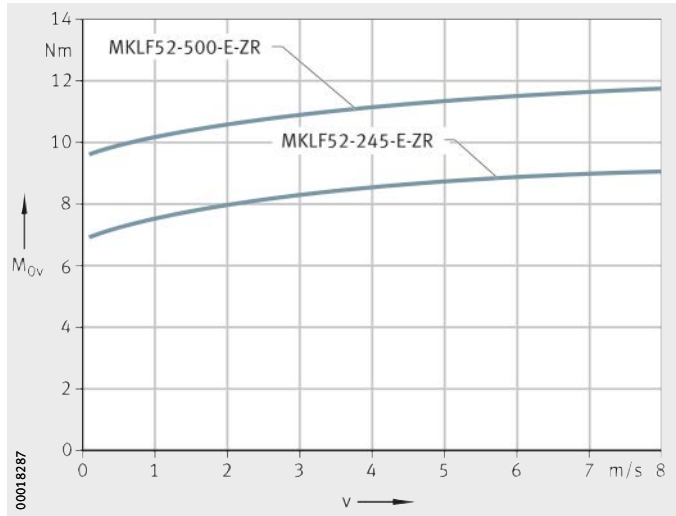

MKLF52-500-E-ZR
MKLF52-245-E-ZR

v = travel velocity of carriage
M_{0v} = idling drive torque

Figure 7
Idling drive torque
Vertical mounting position

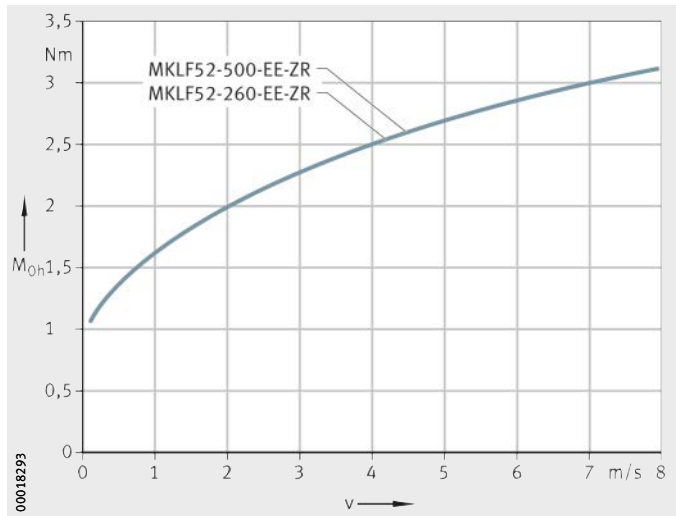

MKLF52-500-EE-ZR
MKLF52-260-EE-ZR

v = travel velocity of carriage
M_{0h} = idling drive torque

Figure 8
Idling drive torque
Horizontal mounting position

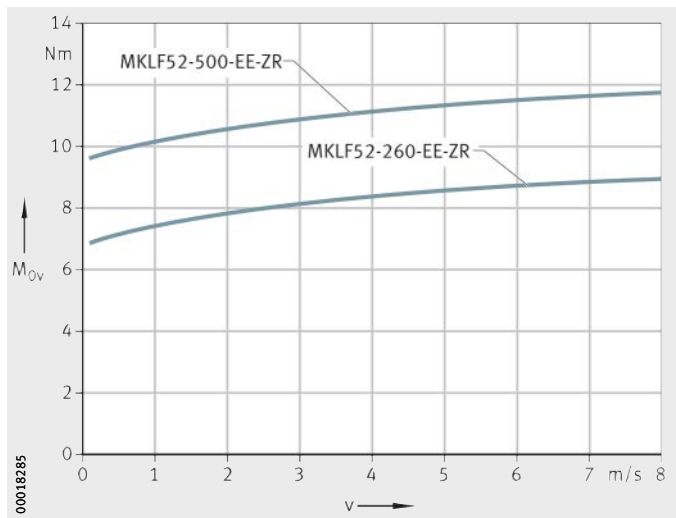

MKLF52-500-EE-ZR
MKLF52-260-EE-ZR

v = travel velocity of carriage
M_{0v} = idling drive torque

Figure 9
Idling drive torque
Vertical mounting position

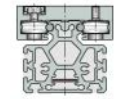

Length calculation of clamping actuators

The length calculation of clamping actuators is based on the required effective stroke length N_H. The effective stroke length N_H is the minimum necessary stroke length of a carriage.
The two effective stroke lengths N_H must be increased by the addition of safety spacing values on both sides.

The total length L_{tot} of the clamping actuator is determined from the support rail length L_2, the lengths of the return units L_4 and the minimum spacing between the carriages $L_{k\ min}$.

Parameters for length calculation

G_H mm
Total stroke length

N_H mm
Effective stroke length per carriage

S mm
Safety spacing, for minimum values see table, page 122

L mm
Length of carriage

L_2 mm
Length of support rail

L_4 mm
Length of return unit

L_6 mm
Length of wiper brushes

L_{tot} mm
Total length of actuator

L_k mm
Spacing between the carriages when moved together.

Total stroke length

The total stroke length G_H is determined from the two required effective stroke lengths and the safety spacings, which must be at least 85 mm.

$$G_H = 2 \cdot N_H + 2 \cdot S$$

Support rails

Clamping actuators are only available with a single-piece support rails. The maximum length of a guideway is 8 000 mm.

Minimum spacing L_k between carriages

The minimum spacing L_k between the carriages when moved together is 20 mm.

Total length L_{tot} and guideway length L_2

The following equations are designed for the clamping actuator. The parameters and their position can be found in *Figure 10* and the table.

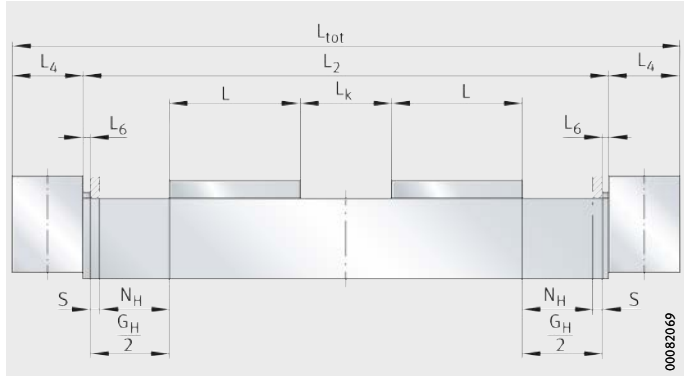

Figure 10
Length features of the actuator

Two carriages without bellows

$$L_2 = G_H + 2 \cdot L + L_k + 2 \cdot L_6$$

Total length

$$L_{tot} = L_2 + 2 \cdot L_4$$

Length parameters

Designation	L mm	L_4 mm	L_6 mm	S mm
MKLF32-155-ZR	155	80	6	85
MKLF32-300-ZR	300			
MKLF52-200-ZR	200	115,5	6	85
MKLF52-300-ZR	300			
MKLF52-245-E-ZR	245	115,5	6	85
MKLF52-500-E-ZR	500			
MKLF52-260-EE-ZR	260	115,5	6	85
MKLF52-500-EE-ZR	500			

Mass calculation

The total mass of a clamping actuator is calculated from the mass of the actuator without a carriage, the carriage and the special design: integrated gearbox (GTRI). Insert the values from the table in the following equation. The values m_{LAW} and m_{BOL} are mandatory.

$$m_{tot} = m_{LAW} + m_{BOL} + m_2$$

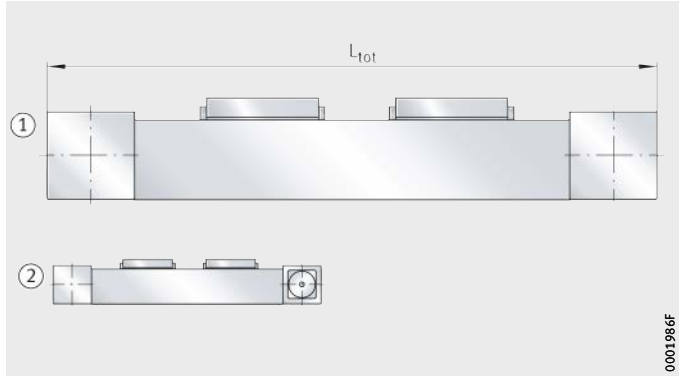

① Basic design
② Integrated gearbox (GTRI/4, GTRI/8)

Figure 11
Basic and additional designs

Values for mass calculation

Designation	Mass	
	Carriage m_{LAW} ≈kg	Actuator without carriage m_{BOL} ≈kg
MKLF32-155-ZR	1,8	$(L_{tot} - 160) \cdot 0{,}0063 + 3{,}11$
MKLF32-300-ZR	3,17	
MKLF52-200-ZR	4,82	$(L_{tot} - 231) \cdot 0{,}0116 + 7{,}91$
MKLF52-300-ZR	6,9	
MKLF52-245-E-ZR	7,69	
MKLF52-500-E-ZR	14,34	
MKLF52-260-EE-ZR	9,06	
MKLF52-500-EE-ZR	15,86	

Values for mass calculation (continued)

Designation	Mass Design m_2	
	GTRI/4 ≈kg	GTRI/8 ≈kg
MKLF32-155-ZR	–	–
MKLF32-300-ZR	–	–
MKLF52-200-ZR	0,7	0,35
MKLF52-300-ZR		
MKLF52-245-E-ZR		
MKLF52-500-E-ZR		
MKLF52-260-EE-ZR		
MKLF52-500-EE-ZR		

Lubrication

The information on lubrication of clamping actuators MKLF matches the information on the lubrication of linear actuators MLF, see page 90.

Grease quantities

Clamping actuator	Relubrication quantity per lubrication nipple and per end face ≈g
MKLF32..-ZR	1 to 2
MKLF52..-ZR	2 to 3
MKLF52..-E-ZR	2 to 3
MKLF52..-EE-ZR	2 to 3

T-slots

The slots in the support rail are designed for T-bolts according to DIN 787 and T-nuts according to DIN 508, *Figure 12*.
T-nuts and T-bolts are inserted using filling slots in the support rail.

MKLF

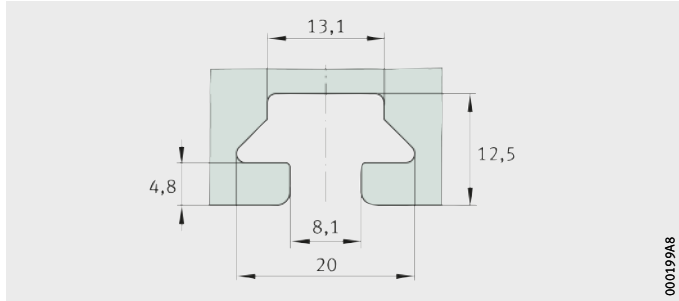

Figure 12
Dimensions of T-slots

Filling openings

The filling openings are located on three sides of the clamping actuator: on both sides and underneath, *Figure 13*.

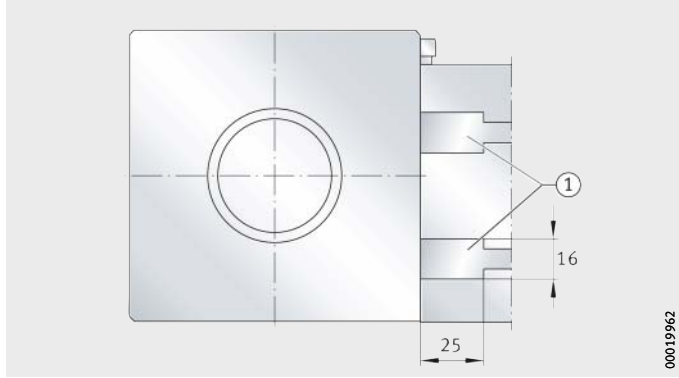

① Filling opening

Figure 13
Filling opening in support rail

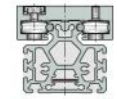

Accuracy The information on the accuracy of clamping actuators MKLF matches the information on the accuracy of linear actuators MLF, see page 98.

Clamping actuators with external track roller guidance system

Ordering example, ordering designation

Available designs of clamping actuators MKLF, see table.

Available designs

Design	Clamping actuator with external track roller guidance system		
Size	Size code		
Carriage length	Length	L	mm
Type of drive	Toothed belt	ZR	
Drive variants	Drive shaft	●	
	Integrated planetary gearbox	GTRI	
Additional function	Integrated planetary gearbox	GTRI	
	Gear reduction ratio	i	
Anti-corrosion protection[1)]	Corrosion-resistant design	RB	
Location of carriage	Threaded holes		
Lengths	Minimum spacing between the carriages	L_k	mm
	Total length	L_{tot}	mm
	Total stroke length	G_H	mm

● Standard scope of delivery.

■ Design not available.

1) Not suitable for combination with integrated planetary gearbox (GTRI).

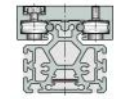

Designation and suffixes MKLF			
32	52	52-E	52-EE
155, 300	200, 300	245, 500	260, 500
ZR	ZR	ZR	ZR
AL, AR, RL, AL-AL, AL-AR, AL-RL, AR-AL, AR-AR, AR-RL, RL-AL, RL-AR, RL-RL, OZ			
■	AL, AR, AL-AL, AL-AR, AL-RL, AR-AL, AR-AR, AR-RL		
■	GTRI	GTRI	GTRI
■	4; 8	4; 8	4; 8
RB	RB	RB	RB
●	●	●	●
Customer specification L_k (where $L_k \geqq 20$ mm)			
to be calculated from total stroke length, see page 121			
to be calculated from effective stroke length, see page 121			

External track roller guidance system, toothed belt drive

Clamping actuator with external track roller guidance system	MKLF
Size code	52
Carriage length L	200 mm
Drive by toothed belt	ZR
Drive shaft on left side	AL
Corrosion-resistant design	RB
Carriage with threaded holes	–
Spacing between carriages when moved together L_k	250 mm
Total length L_{tot}	2 393 mm
Total stroke length G_H	1 500 mm

Ordering designation

MKLF52-200-ZR-AL-RB/2393-1500 (L_k = 250 mm), *Figure 14*

Note total length of each carriage. Spacing L_k between the carriages when moved together must be stated.

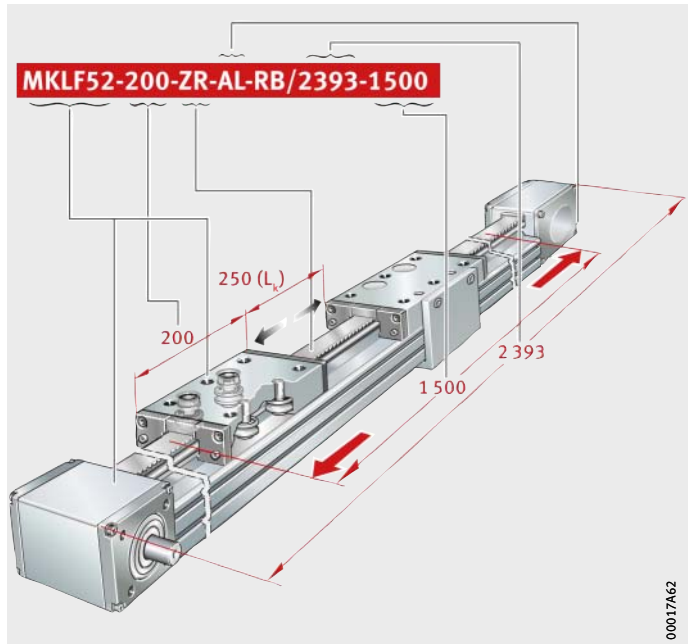

Figure 14
Ordering designation

External track roller guidance system, toothed belt drive, planetary gearbox

Clamping actuator with external track roller guidance system	MKLF
Size code	52
Carriage length L	200 mm
Drive by toothed belt	ZR
Drive shaft on left side	AL
Integrated gearbox	GTRI
Gear reduction ratio	4
Carriage with threaded holes	–
Spacing between carriages when moved together L_k	500 mm
Total length L_{tot}	2 143 mm
Total stroke length G_H	1 000 mm

Ordering designation

MKLF52-200-ZR-AL-GTRI/4/2143-1000 (L_k = 500 mm), *Figure 15*

Note total length of each carriage. Minimum spacing L_k between the carriages when moved together must be stated.

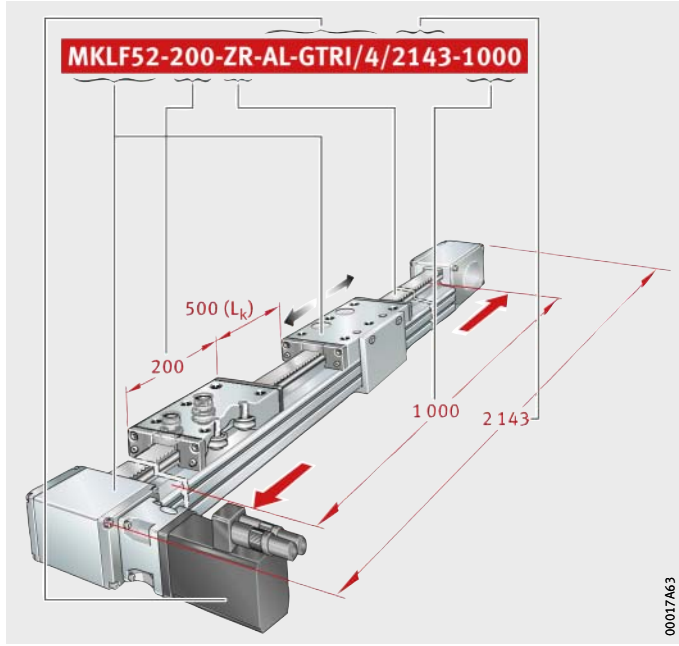

Figure 15
Ordering designation

Clamping actuators

External track roller guidance system
Toothed belt drive
Two carriages moving in opposing directions
Basic design

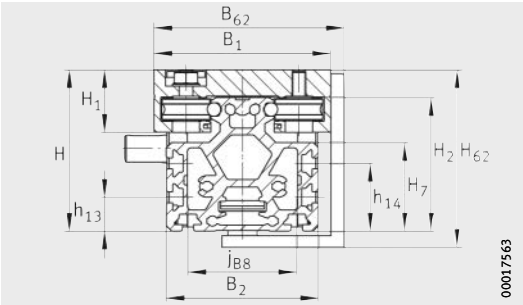

MKLF..-ZR

Dimension table · Dimensions in mm

Designation	Dimensions			Mounting dimensions												
	B_2	H	L	B_1	B_4	B_{62}	B_{72}	d_{85} h7	d_{86}	D_{86} G7	D_{87}	G_{43}	G_{87}	h_{13}	h_{14}	h_{85} ±0,5
MKLF32-155-ZR	75	82	155	86	74	94	2	20	61	70	80	M8	M6	25	–	41,5
MKLF32-300-ZR			300													
MKLF52-200-ZR	112	119	200	130	111	140	2	20	76	95	115	M10	M8	25	50	60,6
MKLF52-300-ZR			300													
MKLF52-245-E-ZR	112	125	245	145	111	155	2	20	76	95	115	M10	M8	25	50	60,6
MKLF52-500-E-ZR			500													
MKLF52-260-EE-ZR	112	125	260	155	111	165	2	20	76	95	115	M12	M8	25	50	60,6
MKLF52-500-EE-ZR			500													

Calculation of lengths L_2 and L_{tot}, see page 121.

1) ① Drive fit lubrication nipple NIP A1, see page 92.
② Filling openings in carrier profile, see page 124.
③ Usable switching tag connectors only on carriage without wraparound, see page 94.

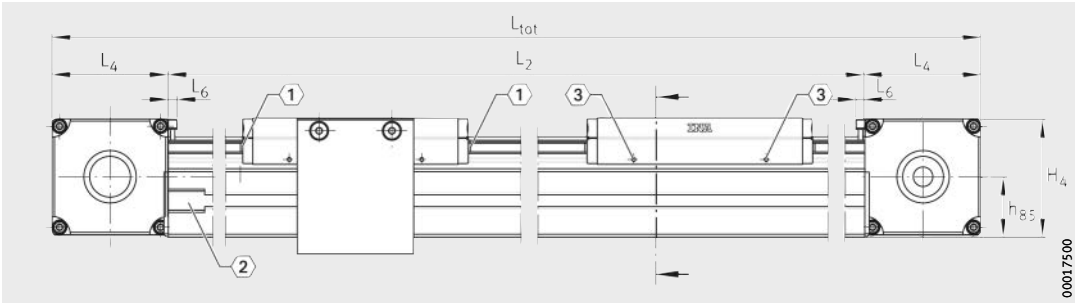

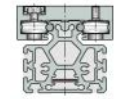

MKLF..-ZR
1, 2, 3 [1)]

H_1	H_2	H_4	H_7	H_{62}	j_{B8}	J_{B43} ±0,1	J_{L43}	J_{L44}	L_4	L_6	L_{62}	L_{88}	N_{B85}	N_{L85}	N_{T85}	t_{43} max.	t_{87} max.	T_{86}
32	66,5	81,5	47	102	43	59	100	– 245	80	6	80	25	6^{P9}	16	3,5	14	12	$2,3^{+0,3}$
46,1	98,6	118,3	65,4	131	80	90	110	– 210	115,5	6	120	31	6^{P9}	25	3,5	20	15	$4^{+0,5}$
53,8	98,6	118,3	65,4	137	80	105	160	– 415	115,5	6	120	31	6^{P9}	25	3,5	24	15	$4^{+0,5}$
70	98,6	118,3	65,4	137	80	115	180	– 420	115,5	6	120	31	6^{P9}	25	3,5	24	15	$4^{+0,5}$

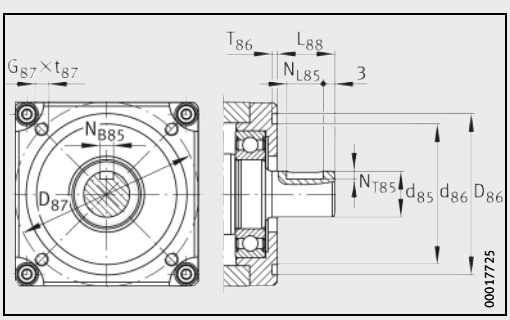

MKLF..-ZR · Drive flange, drive shaft

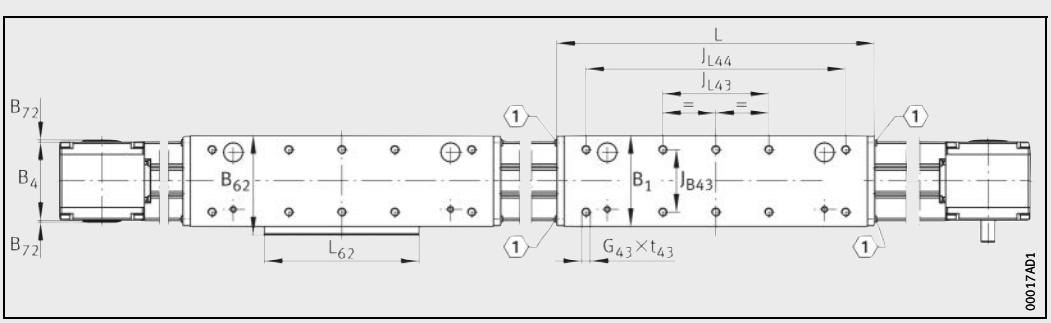

MKLF..-ZR · Top view of long carriage
1 [1)]

Clamping actuators

External track roller guidance system
Toothed belt drive
Two carriages moving in opposing directions
Integrated planetary gearbox

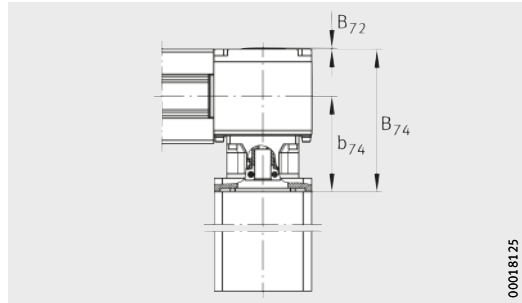

MKLF52..-ZR..-GTRI

Dimension table · Dimensions in mm

Designation	Dimensions of planetary gearbox										
	B_{72}	B_{74}	b_{74}	D_{85} F7 max.	D_{86} F10	D_{87} min.	D_{87} max.	d_{87}	H_{74}	T_{85} max.	T_{87}
MKLF52-200-ZR-GTRI/4	2	168	112,5	19	100	102	130	8,5	115	50,5	16
MKLF52-200-ZR-GTRI/8		158	102,5	14	80	85	100	6,6	85	40,5	10
MKLF52-300-ZR-GTRI/4	2	168	112,5	19	100	102	130	8,5	115	50,5	16
MKLF52-300-ZR-GTRI/8		158	102,5	14	80	85	100	6,6	85	40,5	10
MKLF52-245-E-ZR-GTRI/4	2	168	112,5	19	100	102	130	8,5	115	50,5	16
MKLF52-245-E-ZR-GTRI/8		158	102,5	14	80	85	100	6,6	85	40,5	10
MKLF52-500-E-ZR-GTRI/4	2	168	112,5	19	100	102	130	8,5	115	50,5	16
MKLF52-500-E-ZR-GTRI/8		158	102,5	14	80	85	100	6,6	85	40,5	10
MKLF52-260-EE-ZR-GTRI/4	2	168	112,5	19	100	102	130	8,5	115	50,5	16
MKLF52-260-EE-ZR-GTRI/8		158	102,5	14	80	85	100	6,6	85	40,5	10
MKLF52-500-EE-ZR-GTRI/4	2	168	112,5	19	100	102	130	8,5	115	50,5	16
MKLF52-500-EE-ZR-GTRI/8		158	102,5	14	80	85	100	6,6	85	40,5	10

1) **Other geometrical features, see page 130 and page 131.**

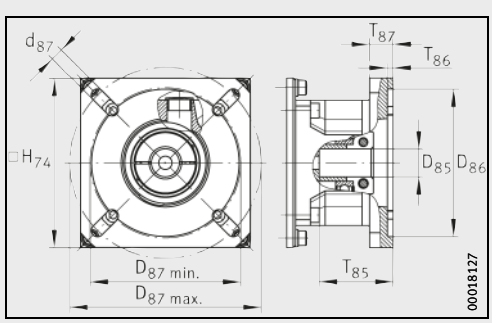

Planetary gearbox with reduction ratio i = 4
with drive flange

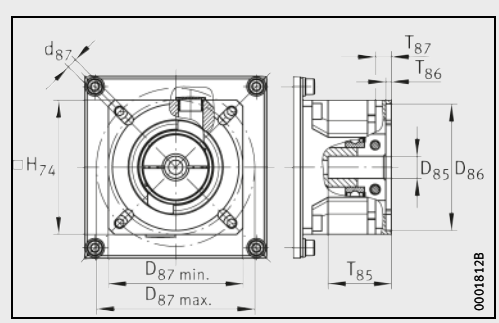

Planetary gearbox with reduction ratio i = 8
with drive flange

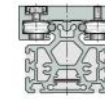

Clamping actuators

External track roller guidance system
Toothed belt drive
Two carriages moving in opposing directions
Performance data

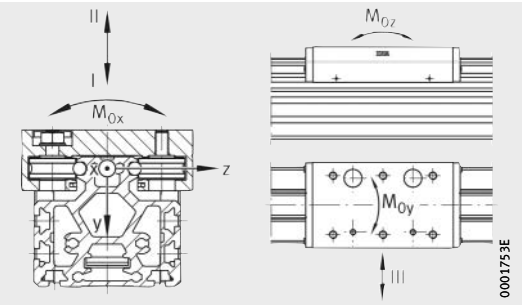

Load directions

Performance data

Designation	Carriage guidance system for each carriage									
	Basic load ratings per carriage						Permissible static moment ratings per carriage[1]			Track rollers
	Load direction I Compressive load		Load direction II Tensile load		Load direction III Lateral load					
	dyn. C N	stat. C_0 N	dyn. C N	stat. C_0 N	dyn. C N	stat. C_0 N	$M_{0x\ per}$ Nm	$M_{0y\ per}$ Nm	$M_{0z\ per}$ Nm	
MKLF32-155-ZR	4 100	2 400	4 100	2 400	6 600	4 200	30	130	70	4×LFR50/8-6-2Z
MKLF32-300-ZR								425	210	
MKLF52-200-ZR	10 000	5 200	10 000	5 200	16 800	10 000	110	290	150	4×LFR5201-10-2Z
MKLF52-200-ZR-GTRI/4										
MKLF52-200-ZR-GTRI/8										
MKLF52-300-ZR	10 000	5 200	10 000	5 200	16 800	10 000	110	760	390	4×LFR5201-10-2Z
MKLF52-300-ZR-GTRI/4										
MKLF52-300-ZR-GTRI/8										
MKLF52-245-E-ZR	17 800	8 900	17 800	8 900	28 400	15 500	180	800	460	4×LFR5301-10-2Z
MKLF52-245-E-ZR-GTRI/4										
MKLF52-245-E-ZR-GTRI/8										
MKLF52-500-E-ZR	17 800	8 900	17 800	8 900	28 400	15 500	180	3 050	1 670	4×LFR5301-10-2Z
MKLF52-500-E-ZR-GTRI/4										
MKLF52-500-E-ZR-GTRI/8										
MKLF52-260-EE-ZR	20 000	10 000	20 000	10 000	32 400	18 200	215	1 100	620	4×LFR5302-10-2Z
MKLF52-260-EE-ZR-GTRI/4										
MKLF52-260-EE-ZR-GTRI/8										
MKLF52-500-EE-ZR	20 000	10 000	20 000	10 000	32 400	18 200	215	3 100	1 650	4×LFR5302-10-2Z
MKLF52-500-EE-ZR-GTRI/4										
MKLF52-500-EE-ZR-GTRI/8										

1) The values are single loads and apply when the underside of the actuator is fully supported.
If there are several carriages per actuator or combined loads are present, these must be reduced.

2) Moment of inertia of area of “closed” support rail (= support rail without free milled area on base).
In comparison with these values, the moment of inertia of area I_y of the side with the free milled area on the base is reduced to an insignificant degree and the moment of inertia of area I_z is reduced by approx. 10%.

3) Maximum permissible drive torque on drive stud.

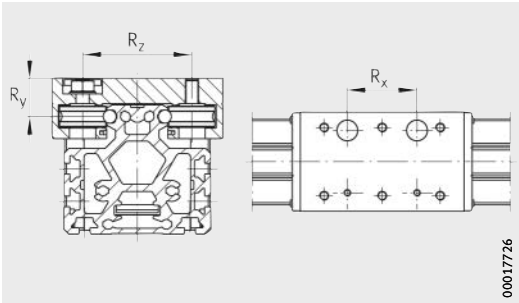

Mounting geometry of track rollers

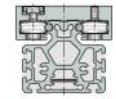

Spacings			Moment of inertia of area of carrier profile[2)]		Drive							
					Ratio	Feed per revolution per carriage	Maximum drive torque[3)]	Maximum drive speed	Toothed belt			Toothed gears and gearboxes
									Type	Mass m	Permissible operating force	Mass moment of inertia
R_x	R_y	R_z	I_y	I_z								
mm	mm	mm	cm^4	cm^4		mm	Nm	min^{-1}		kg/m	N	$kg \cdot cm^2$
60 / 205	20,5	54	104	76	–	175	18	2 740	20AT5	0,068	640	2,2
60	29,3	83	386	301	–	270	73,5	1 780	32AT10	0,2	1 750	12,6
					4	67,5	18	4 000				2,54
					8	33,75	7,5	4 000				0,85
160	29,3	83	386	301	–	270	73,5	1 780	32AT10	0,2	1 750	12,6
					4	67,5	18	4 000				2,54
					8	33,75	7,5	4 000				0,85
105	35,3	90	386	301	–	270	73,5	1 780	32AT10	0,2	1 750	12,6
					4	67,5	18	4 000				2,54
					8	33,75	7,5	4 000				0,85
360	35,3	90	386	301	–	270	73,5	1 780	32AT10	0,2	1 750	12,6
					4	67,5	18	4 000				2,54
					8	33,75	7,5	4 000				0,85
120	35,3	95	386	301	–	270	73,5	1 780	32AT10	0,2	1 750	12,6
					4	67,5	18	4 000				2,54
					8	33,75	7,5	4 000				0,85
360	35,3	95	386	301	–	270	73,5	1 780	32AT10	0,2	1 750	12,6
					4	67,5	18	4 000				2,54
					8	33,75	7,5	4 000				0,85

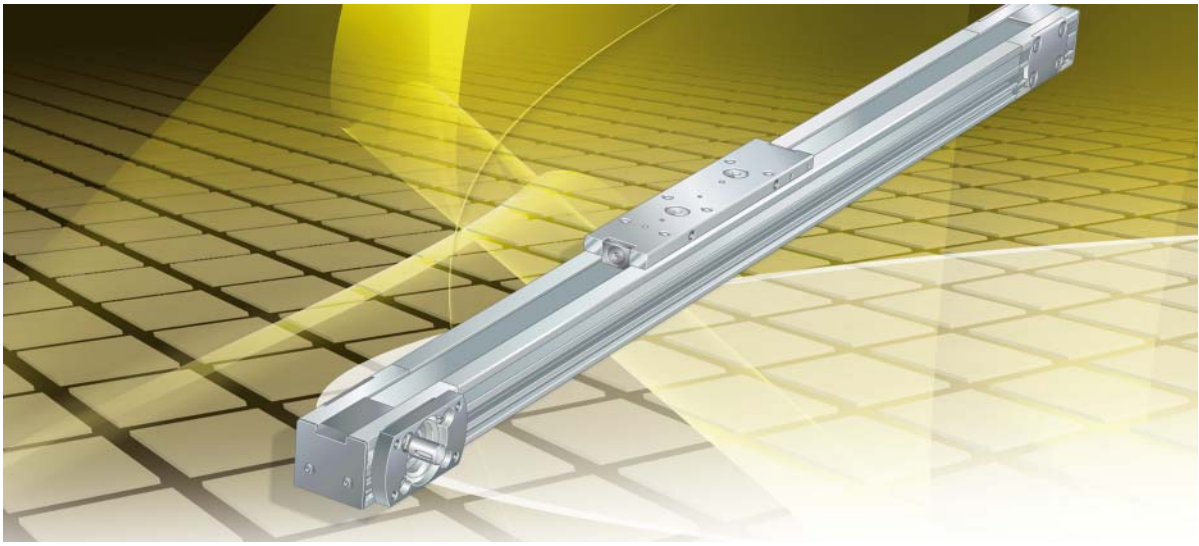

Actuators
with internal track roller guidance system

Toothed belt drive

Actuators
with internal track roller guidance system

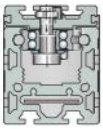

Linear actuator	Characteristics				
	Mounting cross-section width×height	Length of carriage	Maximum support rail length		Load carrying capacity
		L	L_2		
			Single-piece	Multi-piece	
	mm	mm	mm	mm	
MLFI20-130-ZR **MLFI20-250-ZR**	40×45	130 250	2 000	–	From all directions
MLFI25-130-ZR..-N **MLFI25-250-ZR..-N** **MLFI25-500-ZR..-N**	58×56	130 250 500	4 000	–	From all directions
MLFI34-260-ZR	65×85	260	6 000	–	From all directions
MLFI50-250-C-ZR..-N **MLFI50-500-C-ZR..-N**	88×110	250 500	8 000	24 000	From all directions
MLFI140-240-3ZR..-N **MLFI140-500-3ZR..-N**	180×105	240 500	8 000	24 000	From all directions
MLFI200-365-3ZR..-N **MLFI200-500-3ZR..-N**	260×145	365 500	8 000	24 000	From all directions
MLFI50-250-C-LN-ZR..-N **MLFI50-500-C-LN-ZR..-N**	88×110	250 500	8 000	24 000	From all directions

1) Basic load ratings C and C_0 in the compressive direction of the actuator guidance system.

Track roller guidance system	Basic load ratings of carriage guidance system[1)]		Toothed belt drive		Permissible toothed belt operating force	Maximum travel velocity	Maximum acceleration	Repeat accuracy	Operating temperature	Mounting position
	dyn. C N	stat. C_0 N	Toothed belt	Feed per revolution mm	N	m/s	m/s^2	mm	°C	
Angular contact ball bearings, adjusted clearance-free	850 1 100	400 560	20-AT-3	81	175	4	20	±0,1	0 to +80	Preferably horizontal, vertical also possible
Angular contact ball bearings, adjusted clearance-free	1 750 3 400	950 2 050	25-AT-5	85	420	4	20	±0,1	0 to +80	Preferably horizontal, vertical also possible
Angular contact ball bearings, adjusted clearance-free	10 300	5 400	W-8-PU-32-STD	144	1 400	8	40	–	0 to +80	Preferably horizontal, vertical also possible
Angular contact ball bearings, adjusted clearance-free	6 500 11 400	3 360 5 200	50-AT-10	200	1 880	8	40	±0,1	0 to +80	Preferably horizontal, vertical also possible
Angular contact ball bearings, adjusted clearance-free	17 500	8 000	3×40-AT-10	160	4 500	8	40	±0,1	0 to +80	Both horizontal and vertical
Angular contact ball bearings, adjusted clearance-free	21 000	9 400	3×50-AT-10	230	5 640	8	40	±0,1	0 to +80	Both horizontal and vertical
Angular contact ball bearings, adjusted clearance-free	9 500 19 500	4 400 9 200	50-BATK-10	200	1 880	8	40	±0,1	0 to +80	Preferably horizontal, vertical also possible

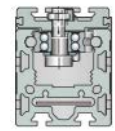

Actuators with internal track roller guidance system

Basic design

Internal track roller guidance system

Toothed belt drive

MLFI20..-ZR, MLFI25..-ZR, MLFI34..-ZR

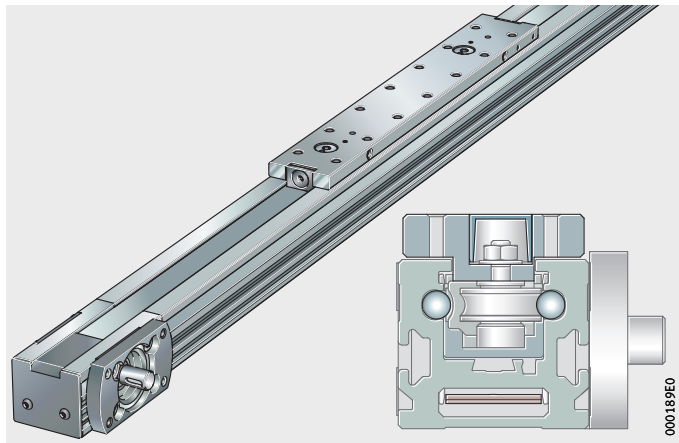

MLFI50..-C-ZR

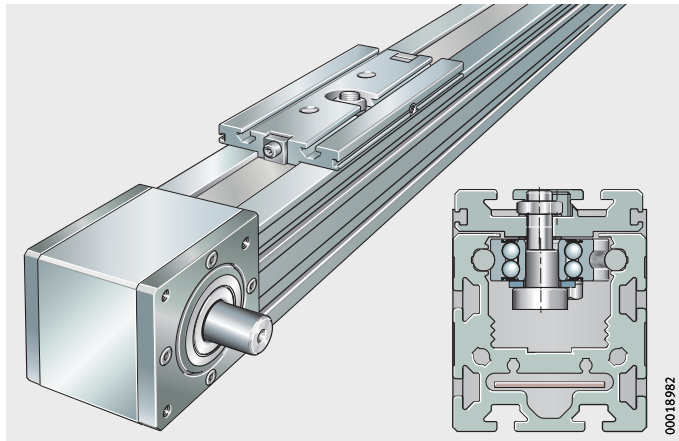

MLFI..-3ZR

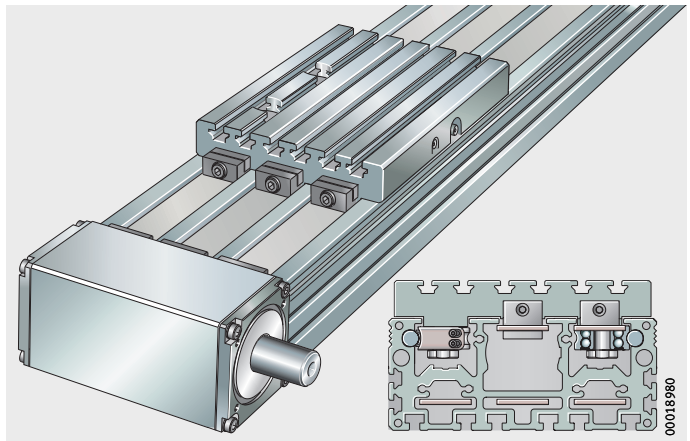

Actuators
with internal track roller guidance system

Features

Linear actuators MLFI..-ZR and MLFI..-3ZR comprise:

- a carriage available in various lengths
- an internal track roller guidance system
- a support rail unit with internal running shafts for the carriage
- a toothed belt drive
- two return units (in the case of sizes MLFI25 and MLFI34, the return unit is integrated).

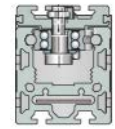

Actuators MLFI..-(3)ZR are driven linear units of a lightweight construction. Their area of application is characterised by low to moderate accuracy requirements, long travel distances with consistently low displacement resistance and low to moderate loads and moments. They facilitate high travel velocities and are resistant to contamination. Their smooth running characteristics are ensured by two pairs of large sized, maintenance-free track rollers.

The carriages have three or four track rollers and run on two parallel internal shafts inserted in the support rail. The track rollers on a carriage are set clearance-free. A track roller is a double row angular contact ball bearing with a heavy section, profiled outer ring.

Drive is provided by a preloaded, wear-resistant toothed belt that is guided and wrapped at the ends by external or internal return units.

Accessories available for the actuators include fasteners and connectors, couplings and coupling housings and electric drive components such as motors, motor/gearbox units and controllers.

The track rollers are mounted internally and are completely covered by the toothed belt guided in the guideway. This design with internal profiled track rollers gives a wide range of actuator cross-sections, from small rectangular or square cross-sections up to large rectangular cross-sections.

Designs

Linear actuators of series MLFI..-(3)ZR are available in various designs, see table. The possible designs and combinations vary according to the size and actuator type.

Available designs

Suffix	Description	Design
–	One driven carriage	Basic design
LN	Low Noise design, only for MLFI50..-C-ZR	Standard
FA517	Multi-piece support rail	Standard
RB	Corrosion-resistant design	Special design
W2	Second, driven carriage	Standard
N	Two fixing slots in carriage	Standard

Special designs

Special designs are available by agreement. Examples of these are linear actuators:

- with more than two driven carriages
- with two (or more) driven carriages of different length
- with reinforced or antistatic toothed belt or toothed belt of high temperature design
- without drive
- with T-strips inserted in the T-slots of the support rail
- with extended carriages
- with a compressed air connection in the support rail or in the return units
- with a drive stud of special dimensions
- with special machining.

Combinations

Possible combinations are:

- linear actuator with two driven carriages and a multi-piece support rail
- linear actuator in the Low-Noise design and with two driven carriages and a multi-piece support rail.

Carriage

The carriage has a saddle plate made from anodised aluminium. It is guided by three or four profiled track rollers of series LFR. The carriage is set clearance-free by means of eccentric bolts in the track rollers.

The carriage contains integral tensioners on both sides for the toothed belt. The available carriage lengths are dependent on the actuator sizes, see table and *Figure 1*, page 143.

Lengths of carriages

Series	Carriage length mm	Suffix
MLFI20..-ZR	130	130
	250	250
MLFI25..-ZR	130	130
	250	250
	500	500
MLFI34..-ZR	260	260
MLFI50..-C-ZR	250	250
	500	500
MLFI140..-3ZR	240	240
	500	500
MLFI200..-3ZR	365	365
	500	500

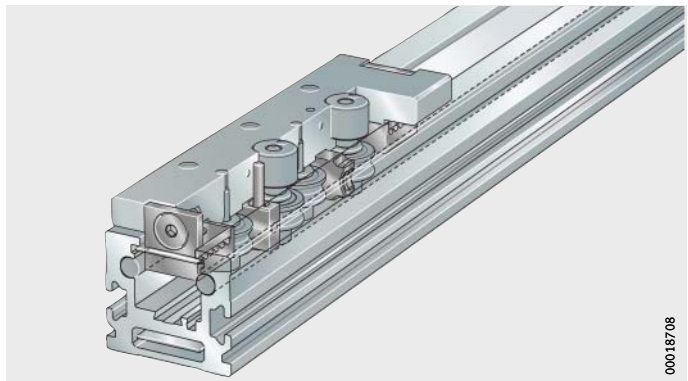

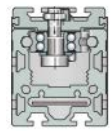

Figure 1
Carriage

Longer carriage or second carriage

The carriages of linear actuators are available in various lengths. Longer carriages allow support of higher moment loads.

Optionally, a second driven carriage can be fitted.

Movable or stationary carriage

A movable carriage is mounted and used as follows, *Figure 2*:

- where a long stroke length or total length is required
- predominantly for horizontal mounting.

A stationary carriage is mounted and used as follows, *Figure 2*:

- where a short stroke length is required
- predominantly for vertical mounting.

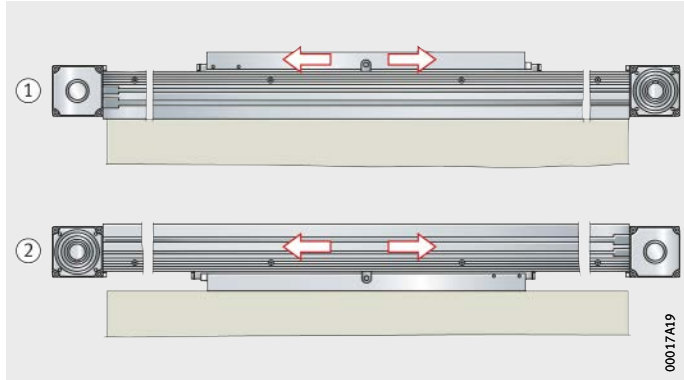

① Movable carriage
② Stationary carriage

Figure 2
Movable or stationary carriage

Lubrication

The carriage is fitted with lubrication nipple units. These are used to lubricate the guidance shafts of the guideway. The track rollers are greased and do not require lubrication.

Location

For location on the adjacent construction, the carriages have two or more T-slots to which the structure to be moved is fixed.
Exceptions: In the case of MLFI20..-ZR and MLFI34..-ZR, the carriage has threaded holes.

Support rail unit

The support rail unit is a composite unit. It comprises a carrier profile made from anodised aluminium with two rolled-in high precision running shafts to grade h6 made from high alloy steel.

The running shafts are hardened and ground. Since the support rail has very high bending rigidity, it can be used to span large gaps.

Guideway length

The maximum guideway length is dependent on the size, see Product matrix, page 138.

Longer lengths can be achieved starting from size MLFI50 by combining several support rail segments. The support rail segments are connected at their butt joints by means of two laterally screw mounted and dowelled aluminium plates.

One return unit and the carriage are premounted on the first support rail segment. The other support rail segments with the screw mounted and dowelled aluminium plates, the second return unit and the toothed belt are supplied in addition and must be fitted by the customer, see section Mounting, page 179.

T-slots

Support rails and carriages (with the exception of MFLI20 and MLFI34) have T-slots for standardised T-nuts. These are used in order to fix the actuators to the adjacent construction, page 175.

Return unit

The return units of the linear actuator MLFI20 comprise a support rail segment that has been adapted, *Figure 3*. The return units of the linear actuators MLFI25 and MLFI34 are integrated in the support rail. The return units of the linear actuators MLFI50, MLFI140 and MLFI200 are incorporated in a housing made from profiled anodised aluminium.

In all return units, the shafts are supported on both sides by ball bearings lubricated for life. The toothed belt is wrapped by means of a gear mounted on the shaft.

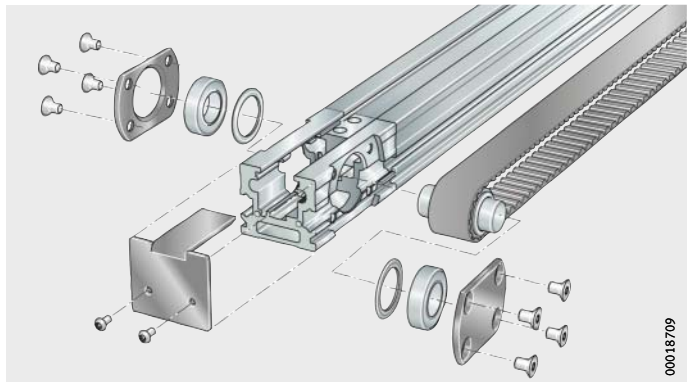

Figure 3
Return unit of MLFI20..-ZR

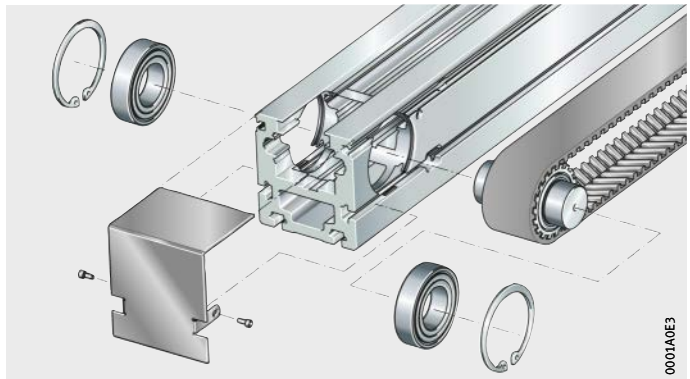

Figure 4
Return unit
of MLFI25..-ZR, MLFI34..-ZR

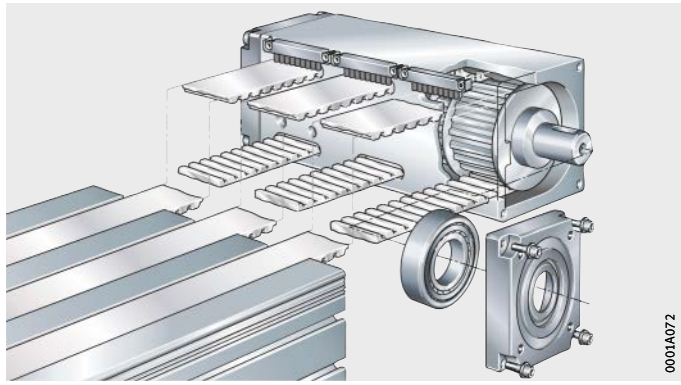

Figure 5
Return unit of MLFI..-3ZR

Toothed belt

A reinforced toothed belt is fitted that allows the transmission of high tensile forces with a long rating life. Tensioning of the belt is carried out by means of the tensioning unit in the carriage.

Drive

The actuators are available without a drive shaft as well as with a drive shaft on the left side, right side or passing through the unit, see table. Possible combinations and drive variants, see also section Designs, page 141.

Suffixes

Drive variants	Suffix
Drive shaft on left side	AL
Drive shaft on right side	AR
No drive shaft	OZ
Drive shaft on both sides (left and right)	RL

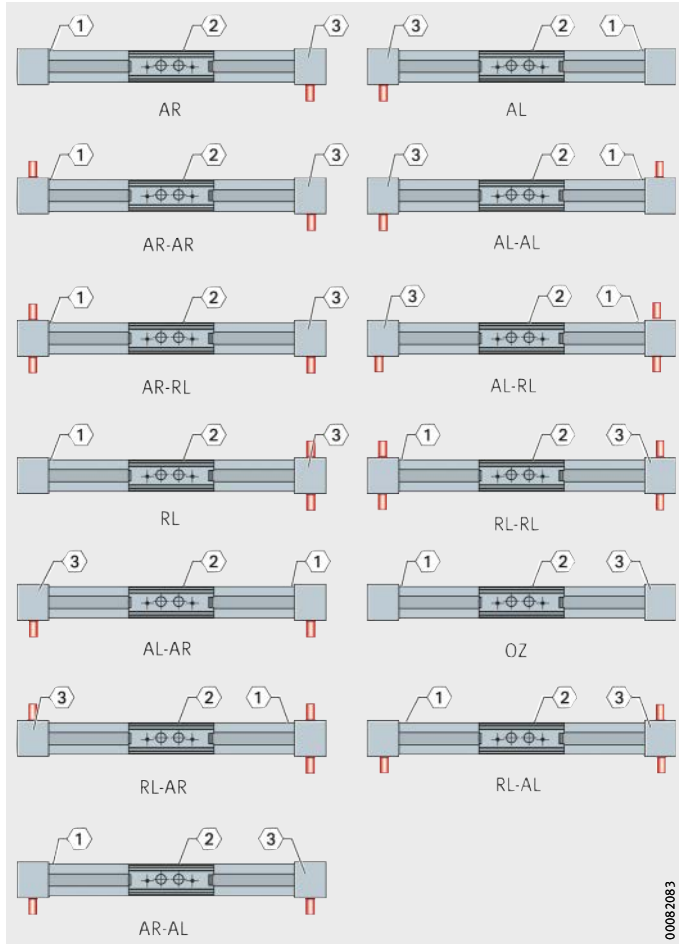

(1) Filling slot for T-nuts and T-bolts on single-piece support rails
(2) Reference side (carriage side with eccentric bolts)
(3) Drive and marking side

Figure 6
Drive variants

Drive elements

For actuators, Schaeffler also supplies components such as couplings, coupling housings and planetary gearboxes as well as servo motors and servo controllers, *Figure 7*.

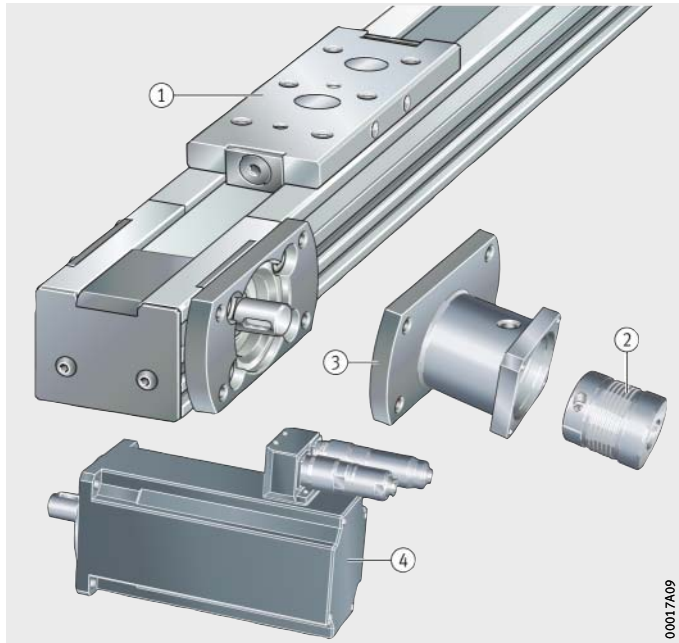

Example:
MLFI20-130-ZR
① Actuator with internal track roller guidance system and toothed belt drive (linear actuator given here as an example)
② Coupling KUP
③ Coupling housing KGEH
④ Servo motor MOT

Figure 7
Linear actuator with drive elements

Proven drive combinations

The combination of the necessary drive components for vertical and horizontal applications as a function of the mass to be moved, the acceleration and the travel velocity of carriages is shown on page 681.

Mechanical accessories

A large number of accessories are available for linear actuators with internal track roller guidance system. The allocation of accessories, see table, is valid if the data match the Technical principles, page 13, and the Design and safety guidelines, page 150.

Allocation

Linear actuator	MLFI..-ZR				MLFI..-3ZR	
Size	20	25	34	50	140	200
Fixing brackets, see page 811						
WKL-48×48×35	–	–	–	–	②	②
WKL-65×65×35	–	–	–	–	②	–
WKL-65×65×30-N	–	–	①	②③	②	②
WKL-65×65×35-N	–	–	–	②	②	–
WKL-90×90×35-N	–	–	–	①	②	–
WKL-98×98×35	–	–	–	–	–	②
Clamping lugs, see page 829						
SPPR-12×20	①	–	–	–	–	–
SPPR-13,5×20	–	–	–	①	–	–
SPPR-22×20	–	–	–	–	①	–
SPPR-24×20	–	①	①	–	–	–
SPPR-23×30	–	–	–	①	–	–
SPPR-26×30	–	–	–	–	–	①
SPPR-28×30	–	–	–	–	①	①
T-nuts, see page 835						
MU-DIN 508 M4×5	–	⑤	⑤	–	⑥	–
MU-M3×5 (similar to DIN 508)	–	⑤	⑤	–	⑥	–
MU-DIN 508 M6×8	–	–	–	⑤	⑦	⑦
MU-M4×8 (similar to DIN 508)	–	–	–	⑤	⑦	⑦
MU-DIN 508 M8×10	–	–	–	–	–	⑧
MU-M6×10 (similar to DIN 508)	–	–	–	–	–	⑧
T-nuts made from corrosion-resistant steel, see page 835						
MU-DIN 508 M4×5-RB	–	⑤	⑤	–	⑥	–
MU-DIN 508 M6×8-RB	–	–	–	⑤	⑦	⑦
MU-DIN 508 M8×10-RB	–	–	–	–	–	⑧

① Suitable.
② Only for the lowest lateral T-slot in the support rail.
③ Only with M5 screws, only in the lateral T-slots in the support rail.
④ For T-slots in the support rail.
⑤ For T-slots in the support rail and carriage.
⑥ For 5 mm wide T-slots in the support rail.
⑦ For 8 mm wide T-slots in the support rail and carriage.
⑧ For 10 mm wide T-slots in the support rail.

Allocation
(continued)

Linear actuator	MLFI..-ZR, MLFI..-3ZR					
Size	20	25	34	50	140	200
T-bolts, see page 835						
SHR DIN 787-M5×5×25	④	⑤	④	–	⑥	–
SHR DIN 787-M8×8×32	–	–	–	⑤	⑦	⑦
SHR DIN 787-M10×10×40	–	–	–	–	–	⑧
Rotatable T-nuts, see page 836						
MU-M3×5-RHOMBUS	④	⑤	④	–	⑥	–
MU-M4×8-RHOMBUS	–	–	–	⑤	⑦	⑦
MU-M6×8-RHOMBUS	–	–	–	⑤	⑦	⑦
MU-M8×10-RHOMBUS	–	–	–	–	–	⑧
Positionable T-nuts, see page 836						
MU-M4×5-POS	④	⑤	④	–	⑥	–
MU-M5×5-POS	④	⑤	④	–	⑥	–
MU-M4×8-POS	–	–	–	⑤	⑦	⑦
MU-M5×8-POS	–	–	–	⑤	⑦	⑦
MU-M6×8-POS	–	–	–	⑤	⑦	⑦
MU-M8×8-POS	–	–	–	⑤	⑦	⑦
Hexagon nuts, see page 837						
MU-ISO 4032 M5	④	⑤	④	–	⑥	–
MU-ISO 4032 M8	–	–	–	⑤	⑦	⑦
MU-ISO 4032 M10	–	–	–	–	–	⑧
T-strips, see page 837						
LEIS-M4/5-T-NUT-SB-ST	④	⑤	④	–	⑥	–
LEIS-M4/5-T-NUT-HR-ALU	④⑨	⑤⑨	④⑨	–	⑥⑨	–
LEIS-M6/8-T-NUT-SB-ST	–	–	–	⑤	⑦	⑦
LEIS-M8/8-T-NUT-SB-ST	–	–	–	⑤	⑦	⑦
LEIS-M6/8-T-NUT-HR-ST	–	–	–	⑤⑨	⑦⑨	⑦⑨
LEIS-M6/8-T-NUT-HR-ALU	–	–	–	⑤⑨	⑦⑨	⑦⑨
LEIS-M4/5-T-NUT-ST	–	⑤⑨	④⑨	⑤⑨	⑥⑨	⑥⑨
LEIS-M6/8-T-NUT-ST	–	–	–	⑤⑨	⑦⑨	⑦⑨
LEIS-M8/10-T-NUT-ST	–	–	–	–	–	⑧⑨
Connector sets (parallel connectors), see page 838						
VBS-PVB8	–	–	–	⑤	⑦	⑦
VBS-PVB10	–	–	–	–	–	⑧
VBS-PVB8/10	–	–	–	⑤	⑦	⑦
Slot closing strips, see page 838						
NAD-5×5,7	④	⑤	④	–	⑥	–
NAD-8×4,5	–	–	–	⑤	⑦	⑦
NAD-8×11,5	–	–	–	⑤	⑦	⑦
NAD-10×6,5	–	–	–	–	–	⑧

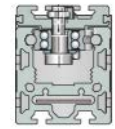

① Suitable.
④ For T-slots in the support rail.
⑤ For T-slots in the support rail and carriage.
⑥ For 5 mm wide T-slots in the support rail.
⑦ For 8 mm wide T-slots in the support rail and carriage.
⑧ For 10 mm wide T-slots in the support rail.
⑨ These must be inserted in the T-slots at the manufacturing plant.

Design and safety guidelines

Load carrying capacity and load safety factor

The load carrying capacities and load safety factors to be observed differ as a function of the mounting position, see section Technical principles, page 12 and Product preselection matrix, page 138.

Deflection

The deflection of linear actuators is essentially dependent on the support spacing, the rigidity of the support rail, the adjacent construction and the bearing arrangement. As the rigidity of these components increases, the deflection of the actuators is reduced.

Diagrams

The diagram values are determined for a bearing arrangement or clamping which is in theory infinitely rigid and are subdivided into locating/non-locating and locating/locating bearing arrangements, starting *Figure 8*, page 151.

The deflection of the support rail is valid under the following conditions:

- support rail unit comprising carrier profile and guidance shafts
- support spacings up to 8 000 mm
- introduction of the load at the centre of the carriage if this is at the centre point between the bearing points.

The diagrams represent guide values only for the deflection of the support rail, starting *Figure 12*, page 152. The effect of deflection on the rating life of the guidance system is not taken into consideration.

It is not possible to provide deflection diagrams for actuators with two carriages since there will be different spacings between the carriages. In such cases, please consult the Schaeffler Group Industrial engineering service.

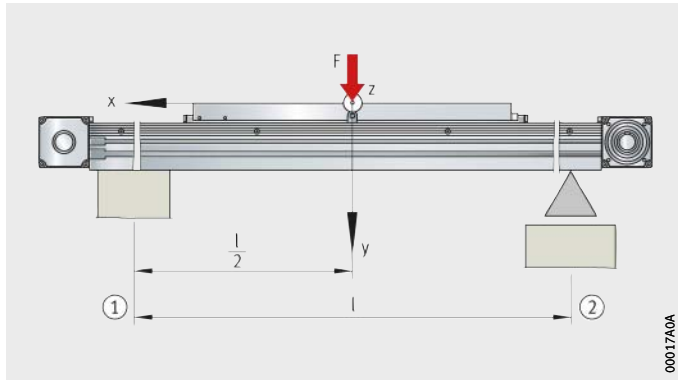

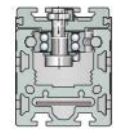

① Locating bearing arrangement
② Non-locating bearing arrangement

Figure 8
Deflection about the z axis

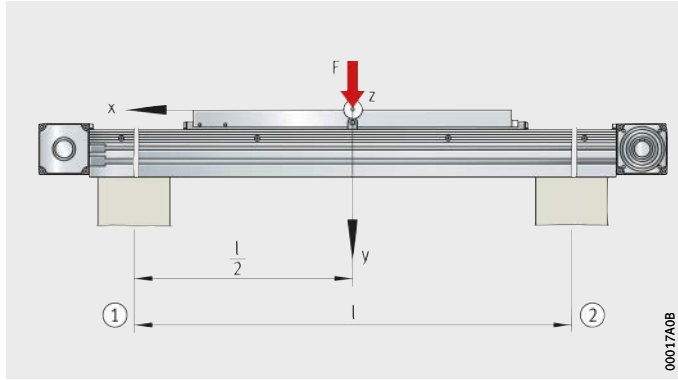

① Locating bearing arrangement
② Locating bearing arrangement

Figure 9
Deflection about the z axis

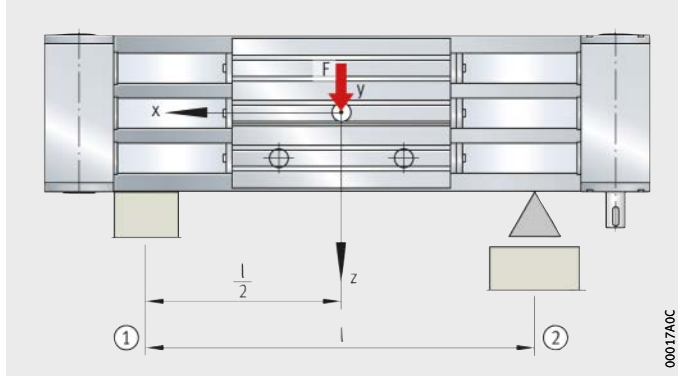

① Locating bearing arrangement
② Non-locating bearing arrangement

Figure 10
Deflection about the y axis

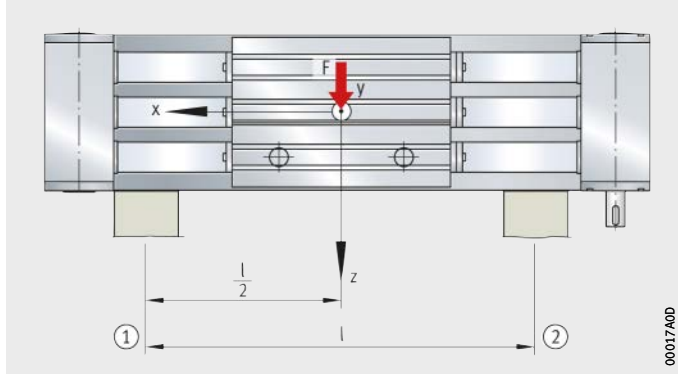

① Locating bearing arrangement
② Locating bearing arrangement

Figure 11
Deflection about the y axis

MLFI20..-ZR

Locating/non-locating bearing arrangement
Δ_{vy} = deflection
l = support spacing

Figure 12
Deflection about the z axis

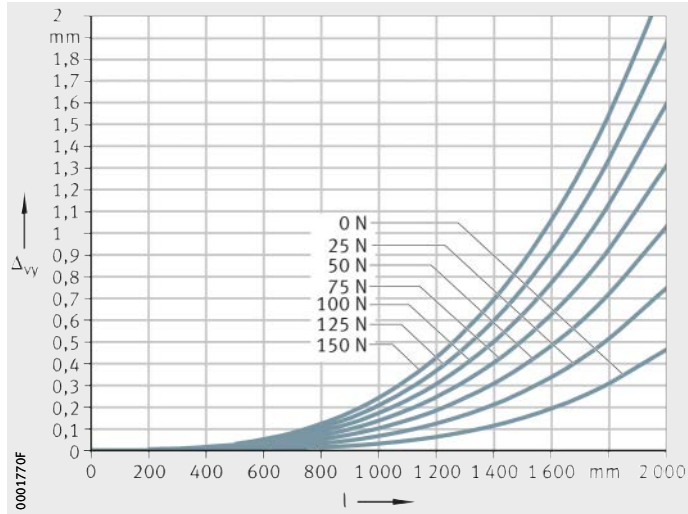

MLFI20..-ZR

Locating/locating bearing arrangement
Δ_{vy} = deflection
l = support spacing

Figure 13
Deflection about the z axis

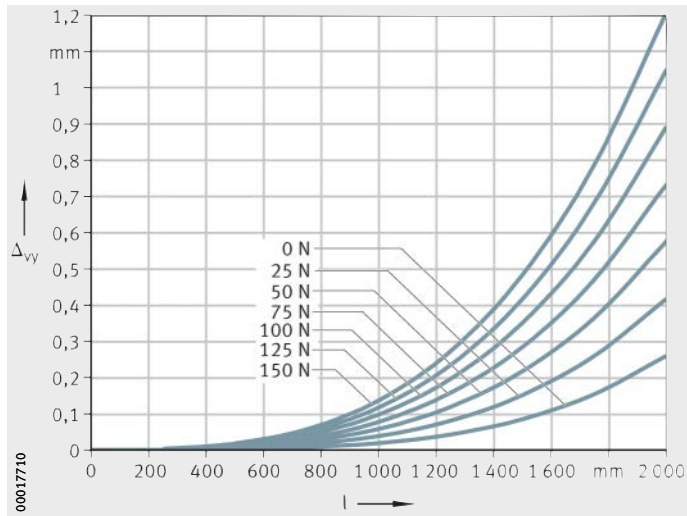

MLFI20..-ZR

Locating/non-locating bearing arrangement
Δ_{vz} = deflection
l = support spacing

Figure 14
Deflection about the y axis

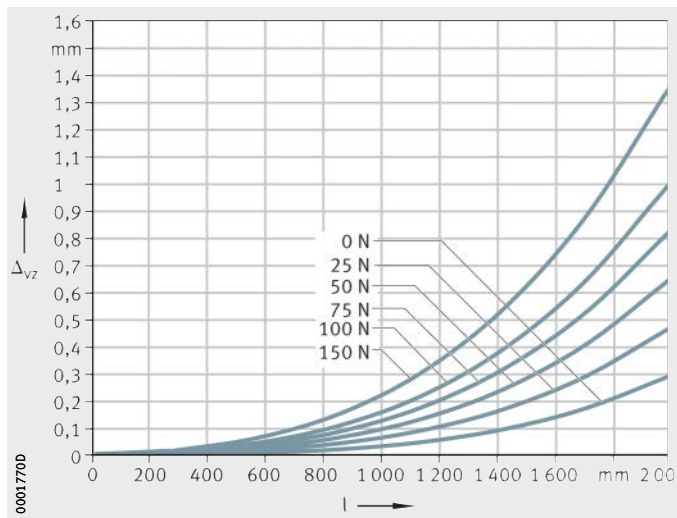

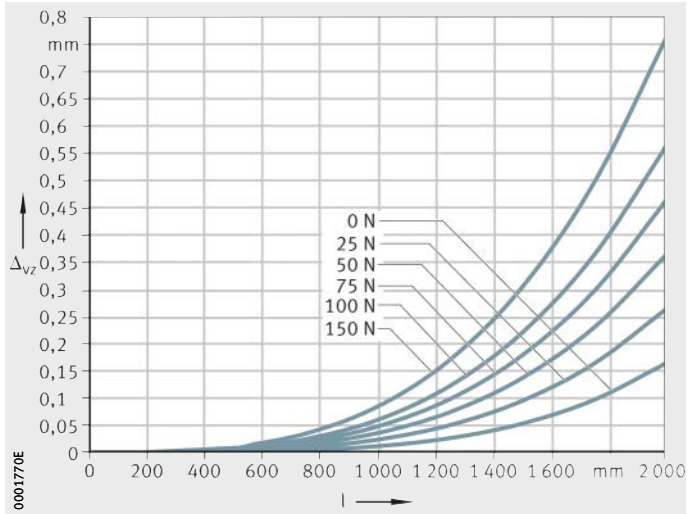

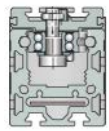

MLFI20..-ZR

Locating/locating bearing arrangement
Δ_{vz} = deflection
l = support spacing

Figure 15
Deflection about the y axis

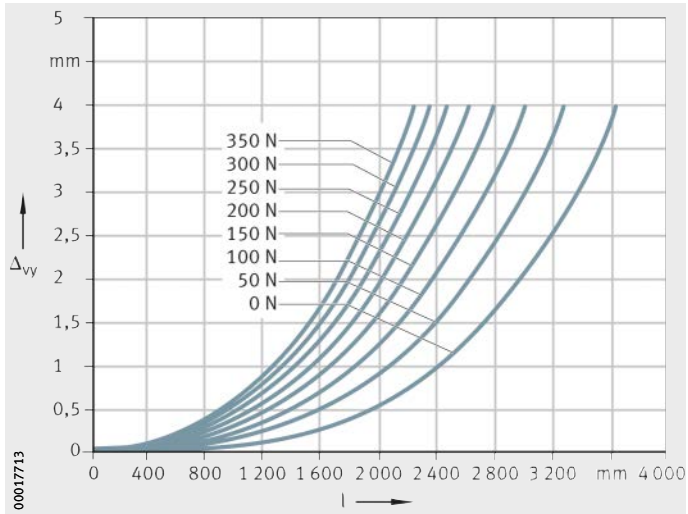

MLFI25..-ZR

Locating/non-locating bearing arrangement
Δ_{vy} = deflection
l = support spacing

Figure 16
Deflection about the z axis

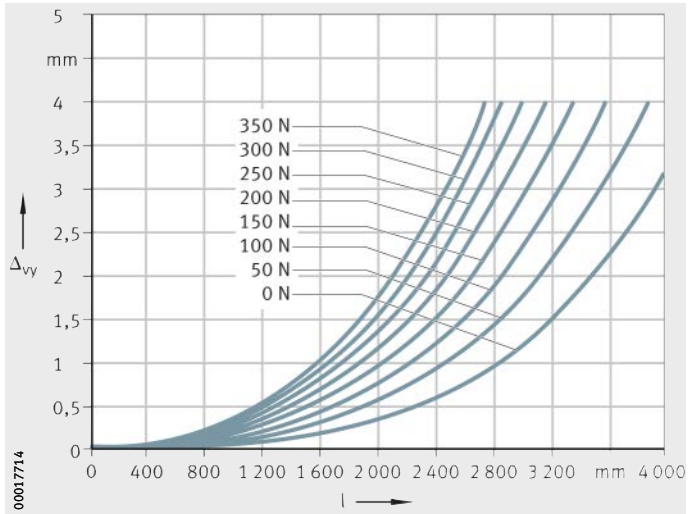

MLFI25..-ZR

Locating/locating bearing arrangement
Δ_{vy} = deflection
l = support spacing

Figure 17
Deflection about the z axis

MLFI25..-ZR

Locating/non-locating bearing arrangement
Δ_{vz} = deflection
l = support spacing

Figure 18
Deflection about the y axis

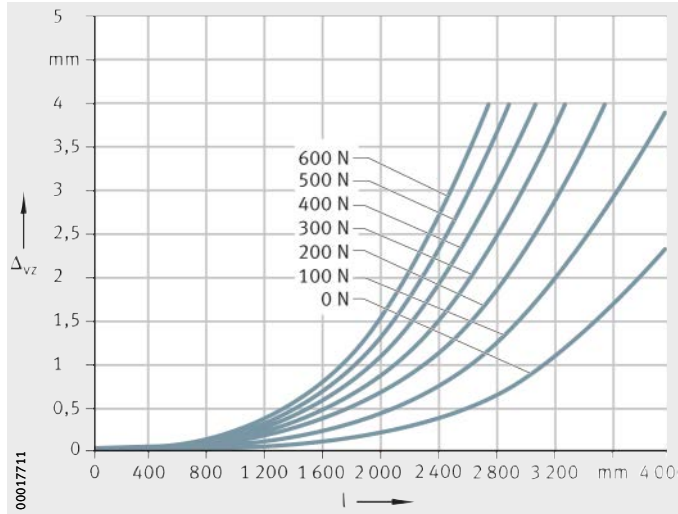

MLFI25..-ZR

Locating/locating bearing arrangement
Δ_{vz} = deflection
l = support spacing

Figure 19
Deflection about the y axis

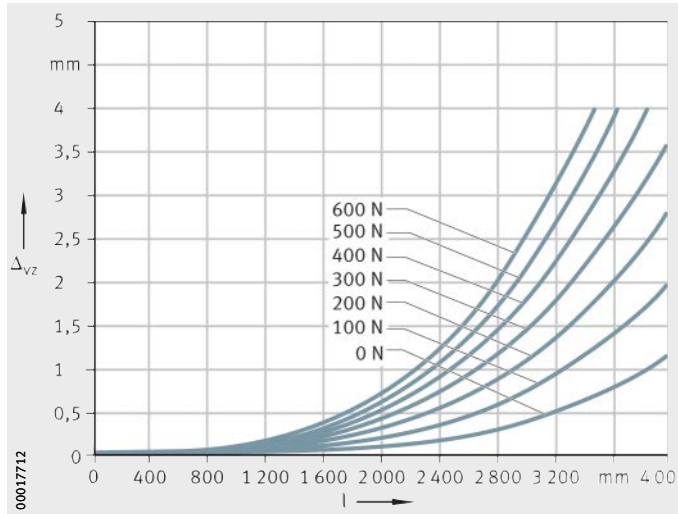

MLFI34..-ZR

Locating/non-locating bearing arrangement
Δ_{vy} = deflection
l = support spacing

Figure 20
Deflection about the z axis

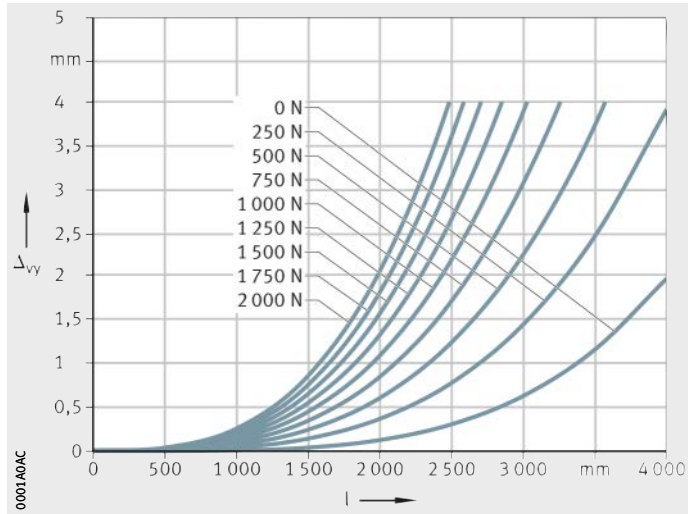

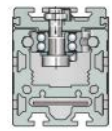

MLFI34..-ZR

Locating/locating bearing arrangement
Δ_{vy} = deflection
l = support spacing

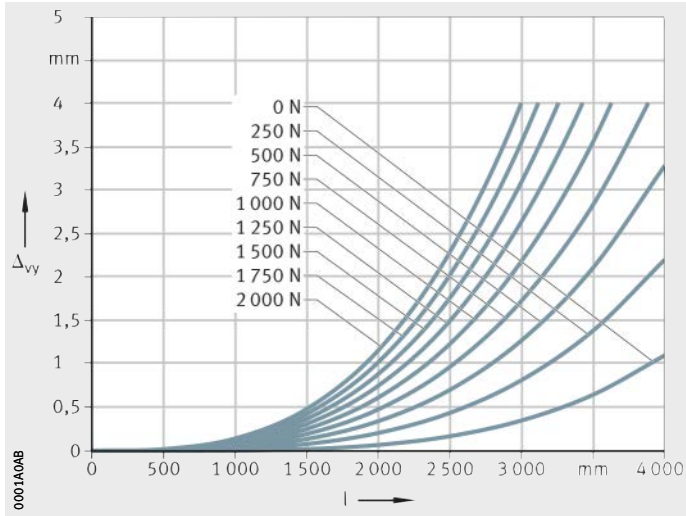

Figure 21
Deflection about the z axis

MLFI34..-ZR

Locating/non-locating bearing arrangement
Δ_{vz} = deflection
l = support spacing

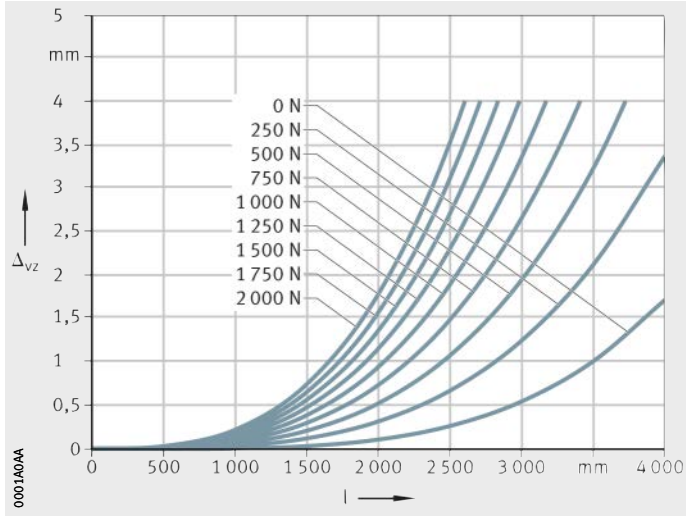

Figure 22
Deflection about the y axis

MLFI34..-ZR

Locating/locating bearing arrangement
Δ_{vz} = deflection
l = support spacing

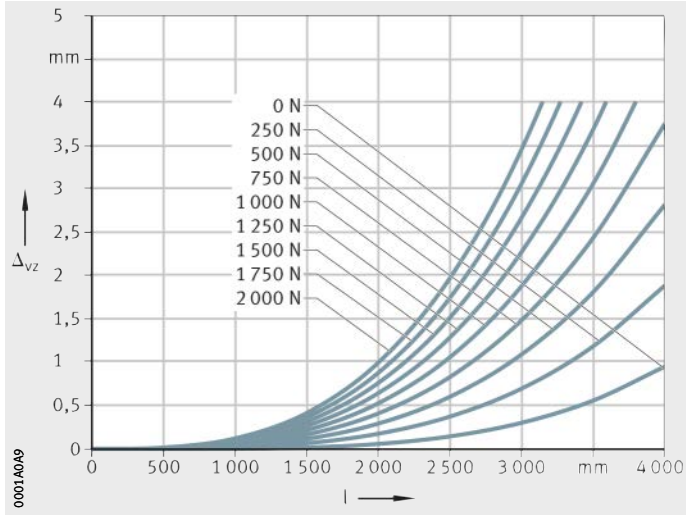

Figure 23
Deflection about the y axis

MLFI50..-C..-ZR

Locating/non-locating bearing arrangement
Δ_{vy} = deflection
l = support spacing

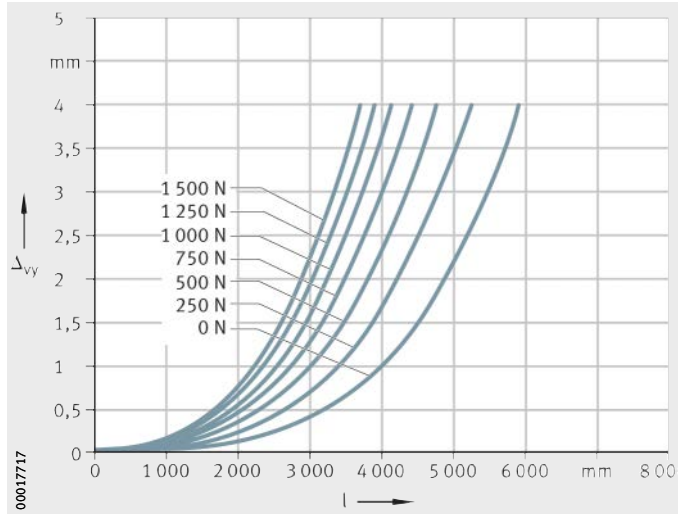

Figure 24
Deflection about the z axis

MLFI50..-C..-ZR

Locating/locating bearing arrangement
Δ_{vy} = deflection
l = support spacing

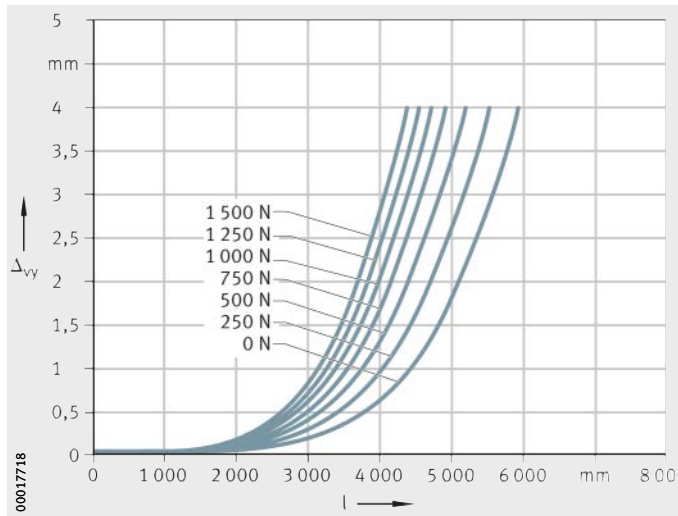

Figure 25
Deflection about the z axis

MLFI50..-C..-ZR

Locating/non-locating bearing arrangement
Δ_{vz} = deflection
l = support spacing

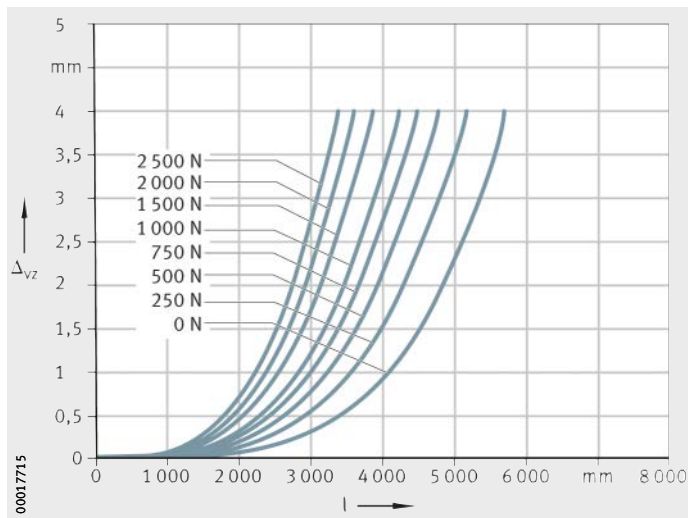

Figure 26
Deflection about the y axis

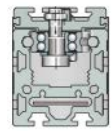

MLFI50..-C..-ZR

Locating/locating bearing arrangement
Δ_{vz} = deflection
l = support spacing

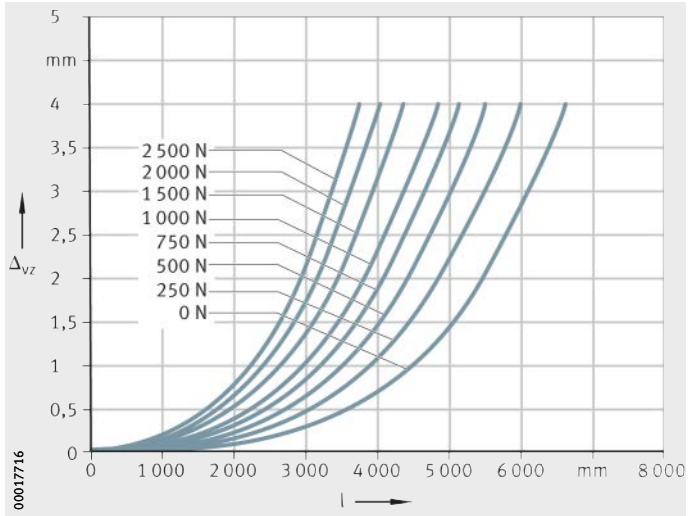

Figure 27
Deflection about the y axis

MLFI140..-3ZR

Locating/non-locating bearing arrangement
Δ_{vy} = deflection
l = support spacing

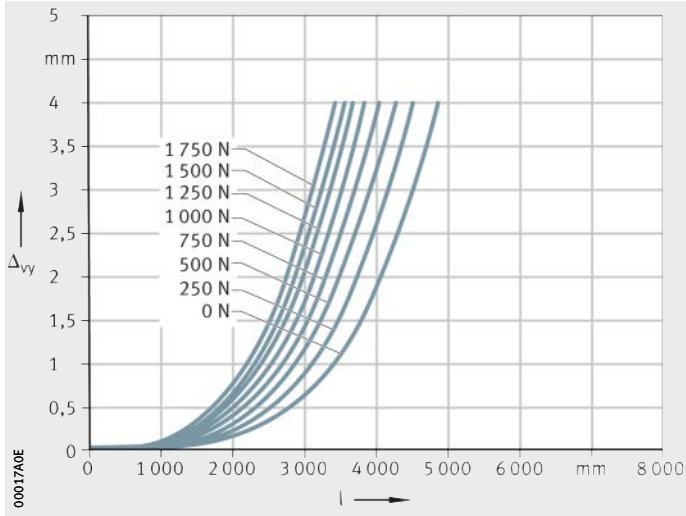

Figure 28
Deflection about the z axis

MLFI140..-3ZR

Locating/locating bearing arrangement
Δ_{vy} = deflection
l = support spacing

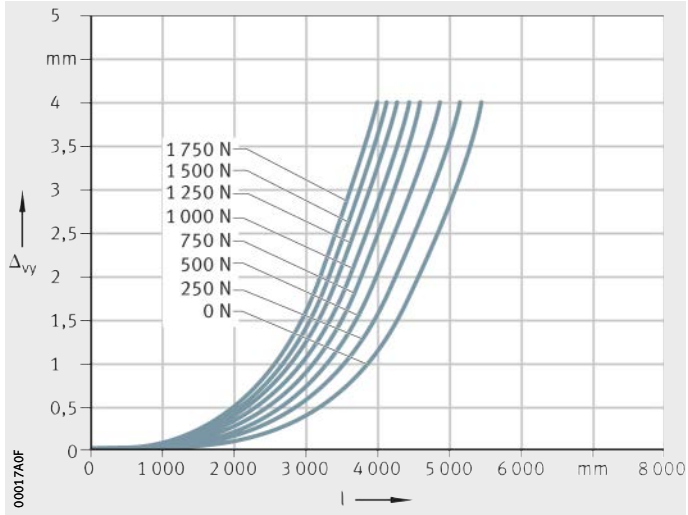

Figure 29
Deflection about the z axis

MLFI140..-3ZR

Locating/non-locating bearing arrangement
Δ_{vz} = deflection
l = support spacing

Figure 30
Deflection about the y axis

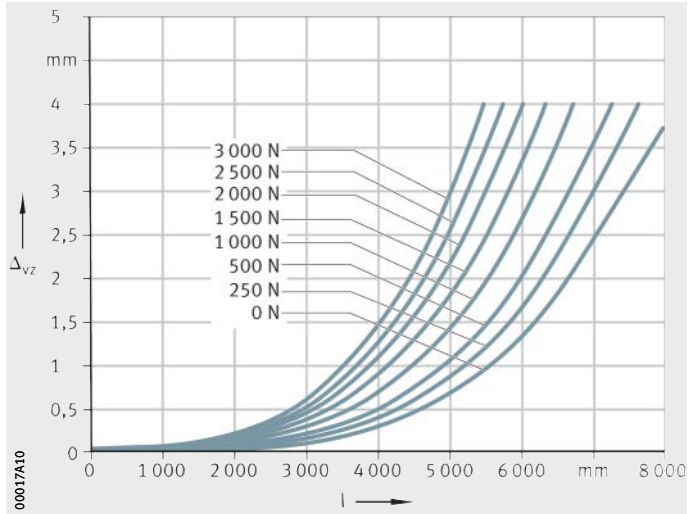

MLFI140..-3ZR

Locating/locating bearing arrangement
Δ_{vz} = deflection
l = support spacing

Figure 31
Deflection about the y axis

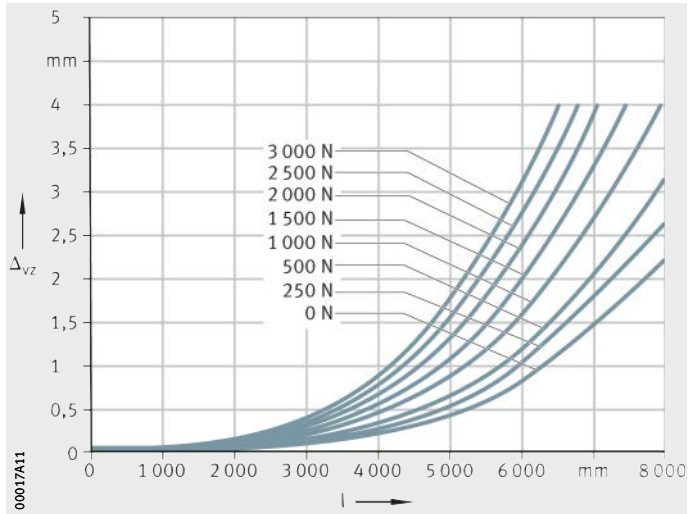

MLFI200..-3ZR

Locating/non-locating bearing arrangement
Δ_{vy} = deflection
l = support spacing

Figure 32
Deflection about the z axis

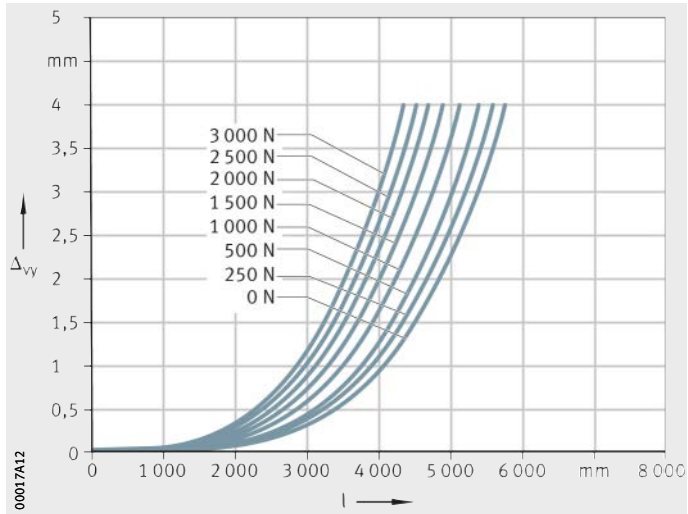

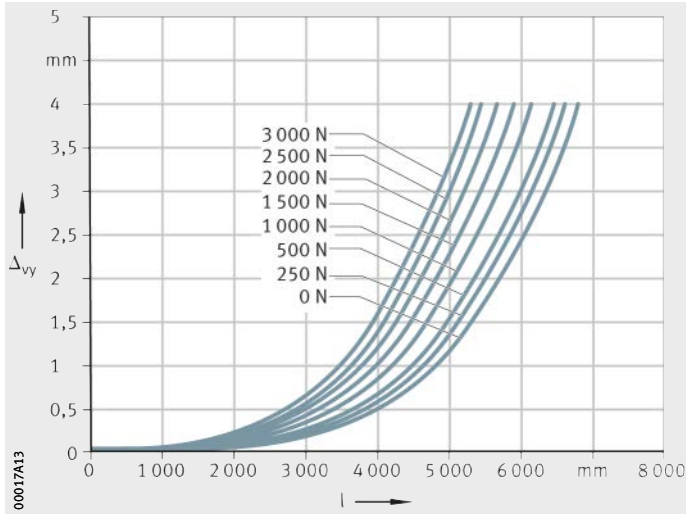

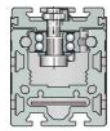

MLFI200..-3ZR

Locating/locating bearing arrangement
Δ_{vy} = deflection
l = support spacing

Figure 33
Deflection about the z axis

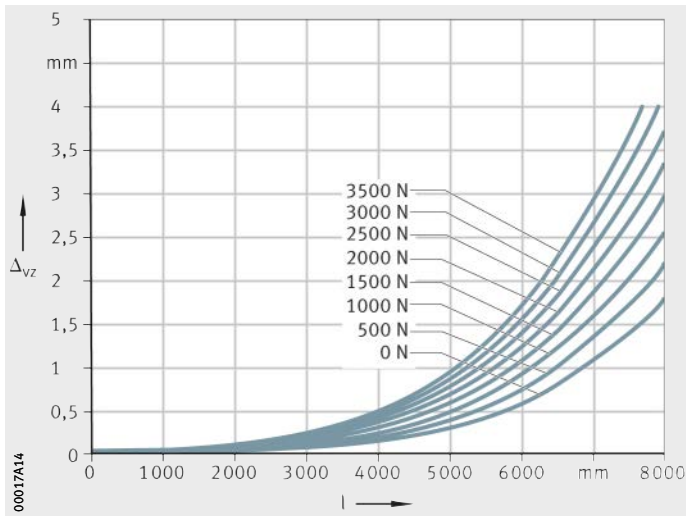

MLFI200..-3ZR

Locating/non-locating bearing arrangement
Δ_{vz} = deflection
l = support spacing

Figure 34
Deflection about the y axis

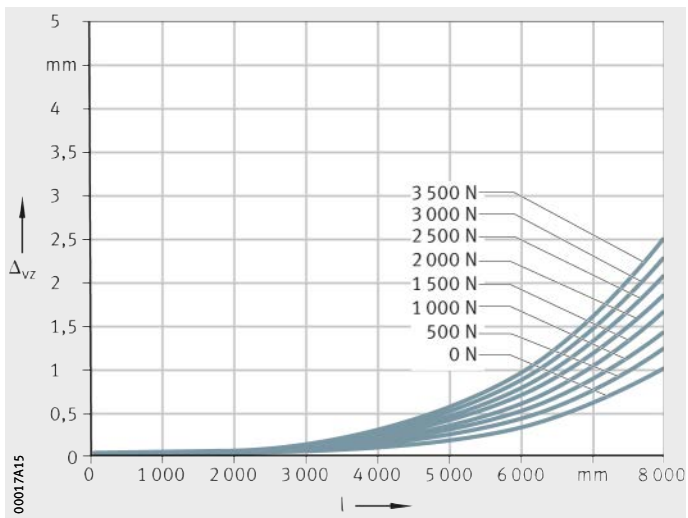

MLFI200..-3ZR

Locating/locating bearing arrangement
Δ_{vz} = deflection
l = support spacing

Figure 35
Deflection about the y axis

Idling drive torque

The idling drive torque M_0 of linear actuators is calculated for a constant velocity and for a horizontal (M_{0h}) or vertical (M_{0v}) mounting position, starting *Figure 36*. The idling drive torque increases with increasing travel velocity. The data in the diagrams are maximum values.

MLFI20..-ZR
MLFI20..-ZR..-W2

v = travel velocity of carriage
M_{0h} = idling drive torque

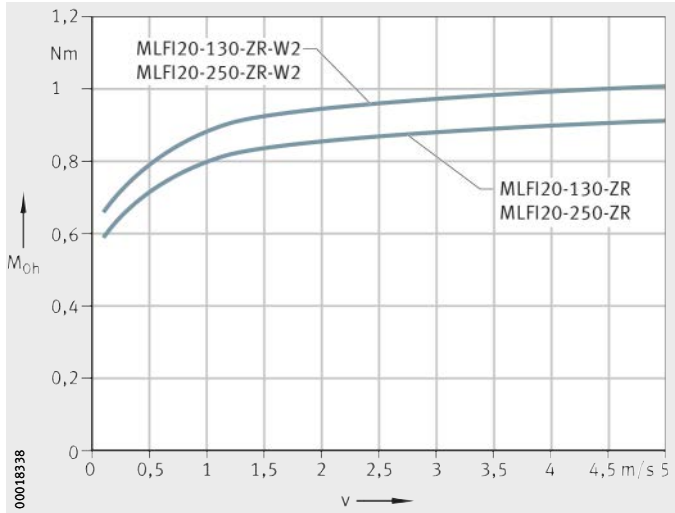

Figure 36
Idling drive torque
Horizontal mounting position

MLFI20..-ZR
MLFI20..-ZR..-W2

v = travel velocity of carriage
M_{0v} = idling drive torque

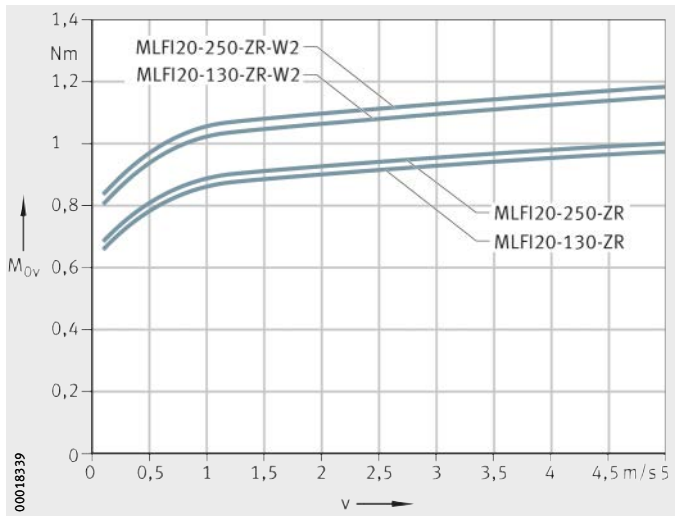

Figure 37
Idling drive torque
Vertical mounting position

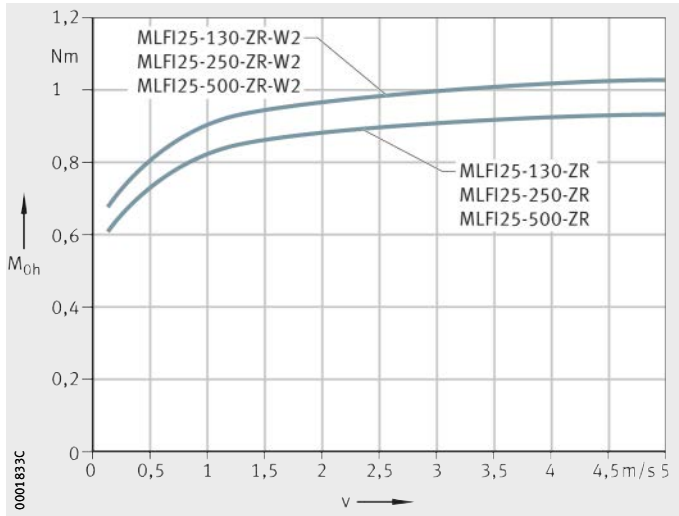

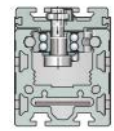

MLFI25..-ZR
MLFI25..-ZR..-W2

v = travel velocity of carriage
M_{0h} = idling drive torque

Figure 38
Idling drive torque
Horizontal mounting position

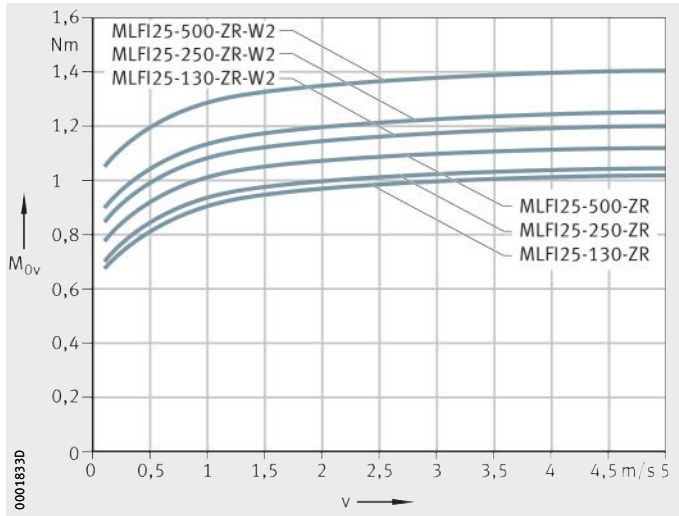

MLFI25..-ZR
MLFI25..-ZR..-W2

v = travel velocity of carriage
M_{0v} = idling drive torque

Figure 39
Idling drive torque
Vertical mounting position

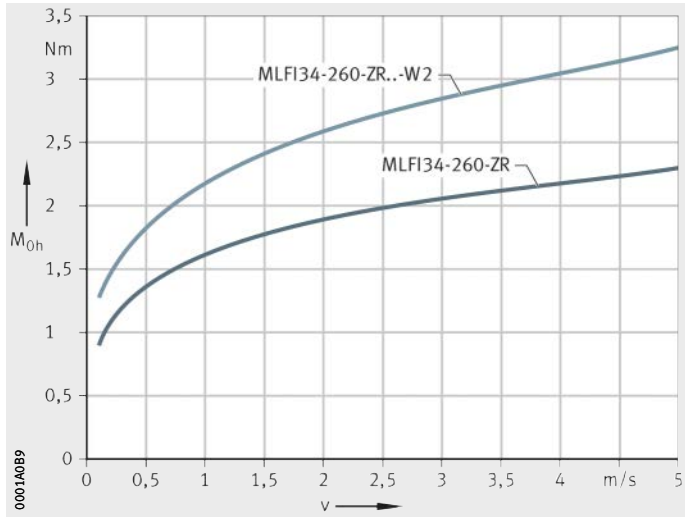

MLFI34..-ZR
MLFI34..-ZR..-W2

v = travel velocity of carriage
M_{0h} = idling drive torque

Figure 40
Idling drive torque
Horizontal mounting position

MLFI34.-ZR
MLFI34..-ZR..-W2

v = travel velocity of carriage
M_{0v} = idling drive torque

Figure 41
Idling drive torque
Vertical mounting position

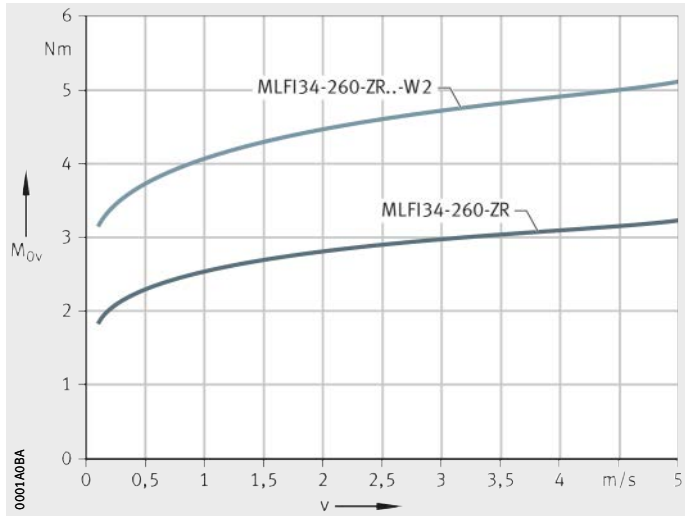

MLFI50..-C-ZR
MLFI50..-C-ZR..-W2

v = travel velocity of carriage
M_{0h} = idling drive torque

Figure 42
Idling drive torque
Horizontal mounting position

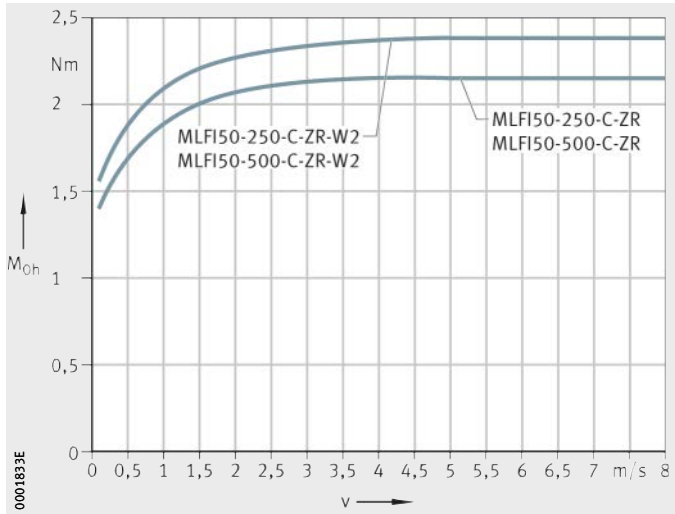

MLFI50..-C-ZR
MLFI50..-C-ZR..-W2

v = travel velocity of carriage
M_{0v} = idling drive torque

Figure 43
Idling drive torque
Vertical mounting position

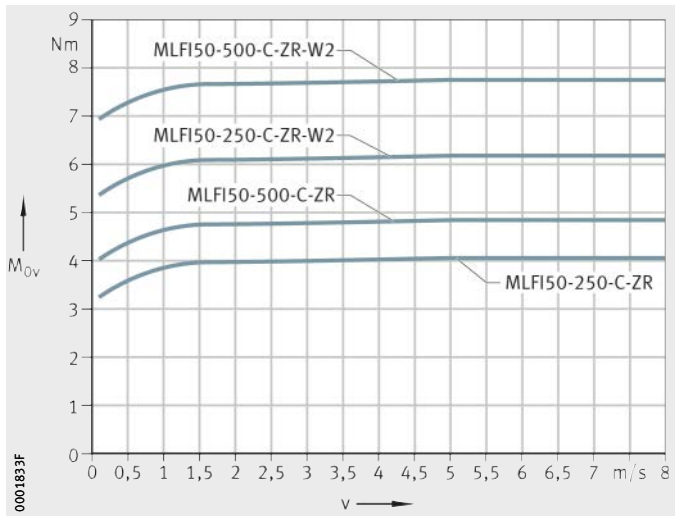

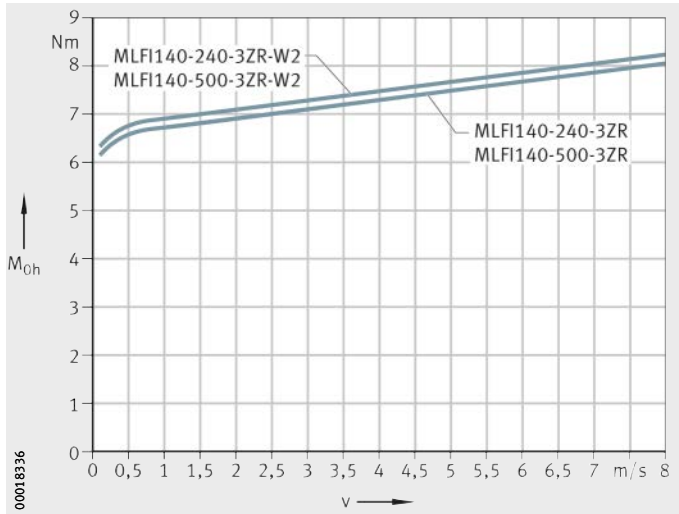

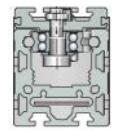

MLFI140..-3ZR
MLFI140..-3ZR..-W2

v = travel velocity of carriage
M_{0h} = idling drive torque

Figure 44
Idling drive torque
Horizontal mounting position

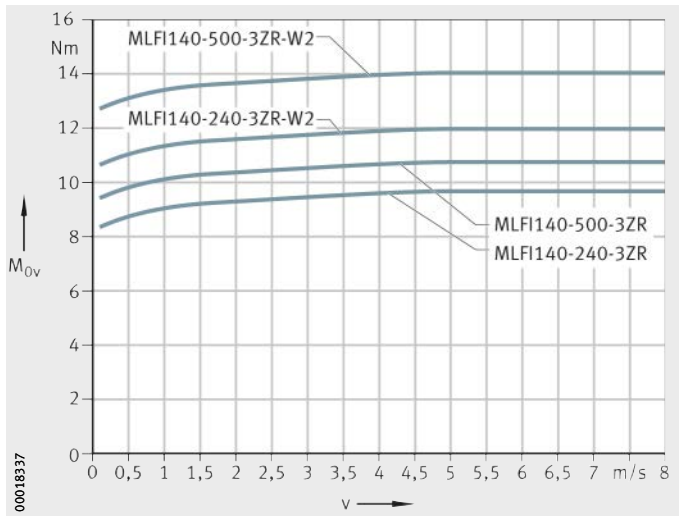

MLFI140..-3ZR
MLFI140..-3ZR..-W2

v = travel velocity of carriage
M_{0v} = idling drive torque

Figure 45
Idling drive torque
Vertical mounting position

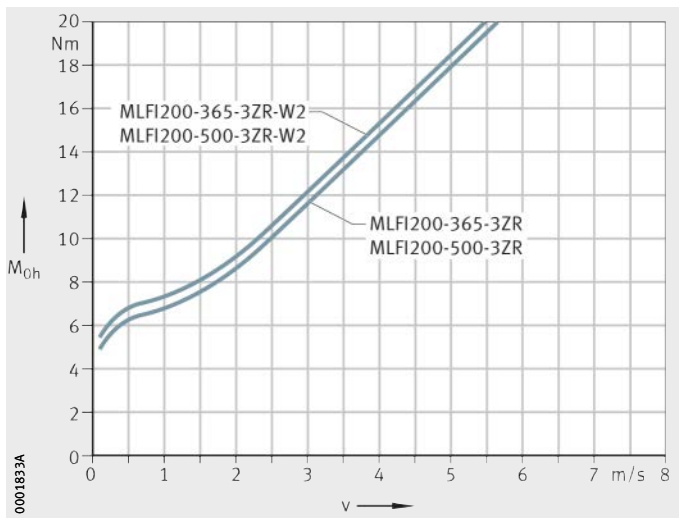

MLFI200..-3ZR
MLFI200..-3ZR..-W2

v = travel velocity of carriage
M_{0h} = idling drive torque

Figure 46
Idling drive torque
Horizontal mounting position

MLFI200..-3ZR
MLFI200..-3ZR..-W2

v = travel velocity of carriage
M_{0v} = idling drive torque

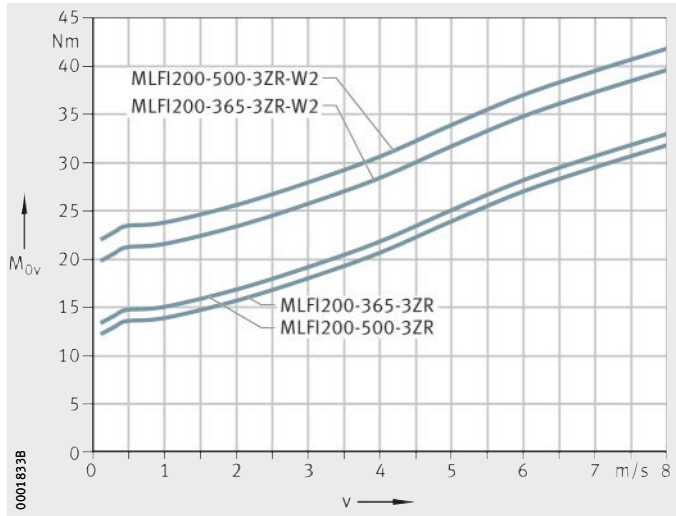

Figure 47
Idling drive torque
Vertical mounting position

Length calculation of actuators

The length calculation of actuators is based on the required effective stroke length N_H. The effective stroke length N_H must be increased by the addition of safety spacing values on both sides of the travel distance.

The total length L_{tot} of the actuator is determined from the total length L_2, the lengths of the return units L_4 on both sides and the carriage length L or the carriage length L_1.
If two carriages are present, both carriage lengths and the spacing L_{x1} between the carriages must be taken into consideration.

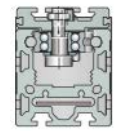

Parameters for length calculation

G_H mm
Total stroke length

N_H mm
Effective stroke length

S mm
Safety spacing, for minimum values see table

L mm
Length of carriage

L_1 mm
Total length of carriage

L_2 mm
Length of support rail

L_4 mm
Length of return unit

L_6 mm
Length of wiper brushes

L_{21} mm
Length of cover plate

L_{tot} mm
Total length of actuator

L_{x1} mm
Spacing between two carriages.

Total stroke length

The total stroke length G_H is determined from the required effective stroke length and the safety spacings.

$$G_H = N_H + 2 \cdot S$$

Single-piece and multi-piece support rails

The maximum length of single-piece support rails, the maximum length of a support rail and the safety spacings S are dependent on size, see table. Actuators of size MLFI50 and above can be supplied in a multi-piece design, see table. The shortest segment length for MLFI50 is 500 mm, while in the case of MLFI140 and MLFI200 it is 1 000 mm.

Safety spacing S, maximum single-piece support rail length L_2

Actuator	Maximum support rail length L_2 (FA517) mm	Maximum length of single-piece support rails L_2 mm	Support rail segment length	Safety spacing S mm
MLFI20..-ZR	2 000	2 000	1	40
MLFI25..-ZR	4 000	4 000	1	
MLFI34..-ZR	6 000	6 000	1	80
MLFI50..-C-ZR	24 000	8 000	3	85
MLFI140..-3ZR	24 000	8 000	3	
MLFI200..-3ZR	24 000	8 000	3	

Spacing L_{x1} between carriages

The minimum spacing L_{x1} between two carriages is 50 mm for sizes MLFI20, MLFI25, MLFI34 and MLFI50. For sizes MLFI140 and MLFI200, the minimum spacing L_{x1} is 100 mm.

Total length L_{tot} and support rail length L_2

The following equations are designed for one and two carriages. The parameters and their position can be found in *Figure 48* and *Figure 50* as well as in the table, page 168.
If more than two carriages are present, please consult us.

MLFI20..-ZR

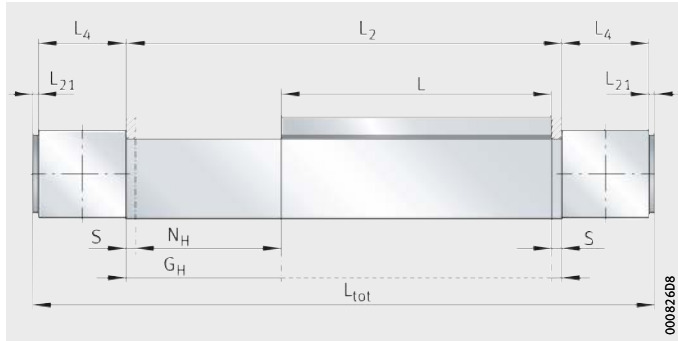

Figure 48
Length parameters for one carriage

One carriage
Size: MLFI20

$$L_2 = G_H + L + 30$$

Total length
Sizes: MLFI20

$$L_{tot} = L_2 + 2 \cdot L_4 + 2 \cdot L_{21}$$

MLFI25..-ZR
MLFI34..-ZR

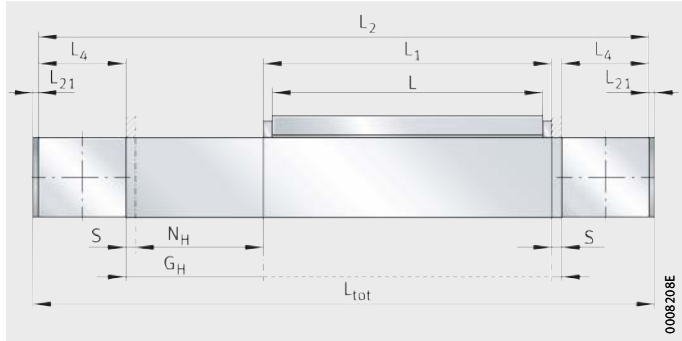

Figure 49
Length parameters for one carriage

One carriage
Size: MLFI25

$$L_2 = G_H + L + 2 \cdot L_4$$

One carriage
Size: MLFI34

$$L_2 = G_H + L_1 + 2 \cdot L_4$$

Total length
Sizes: MLFI25, MLFI34

$$L_{tot} = L_2 + 2 \cdot L_{21}$$

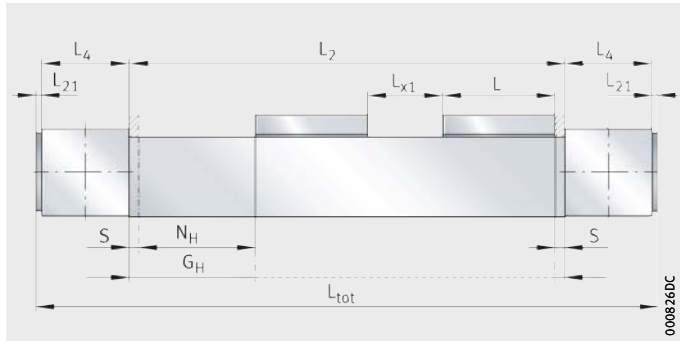

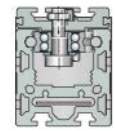

MLFI20..-ZR..-W2

Figure 50
Length parameters for two carriages

Two carriages
Size: MLFI20

$$L_2 = G_H + 2 \cdot L + L_{x1} + 30$$

Total length
Sizes: MLFI20

$$L_{tot} = L_2 + 2 \cdot L_4 + 2 \cdot L_{21}$$

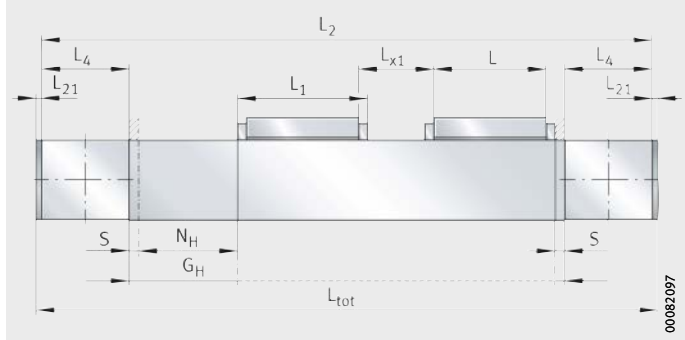

MLFI25..-ZR..-W2
MLFI34..-ZR..-W2

Figure 51
Length parameters for two carriages

Two carriages
Size: MLFI25

$$L_2 = G_H + 2 \cdot L + 2 \cdot L_4 + L_{x1}$$

Two carriages
Size: MLFI34

$$L_2 = G_H + L_1 + L + 2 \cdot L_4 + L_{x1}$$

Total length
Sizes: MLFI25, MLFI34

$$L_{tot} = L_2 + 2 \cdot L_{21}$$

MLFI50..-ZR
MLFI140..-3ZR
MLFI200..-3ZR

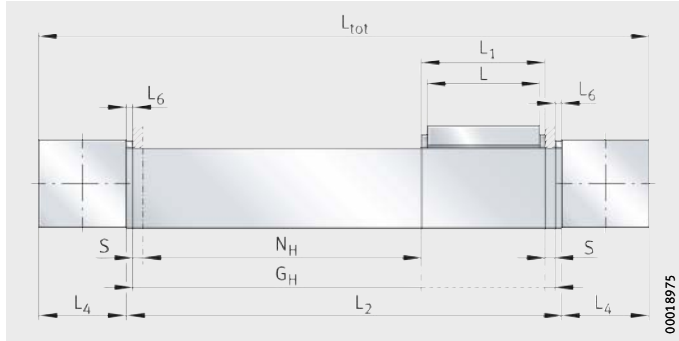

Figure 52
Length parameters for one carriage

One carriage
Sizes: MLFI50, MLFI140, MLFI200

$$L_2 = G_H + L_1 + 2 \cdot L_6$$

Total length
Sizes: MLFI50, MLFI140, MLFI200

$$L_{tot} = L_2 + 2 \cdot L_4$$

MLFI50..-ZR..-W2
MLFI140..-3ZR..-W2
MLFI200..-3ZR..-W2

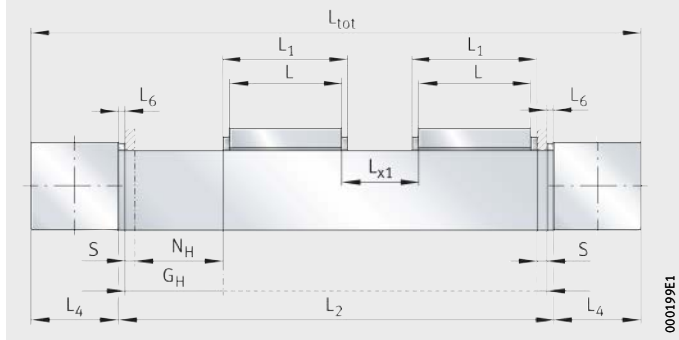

Figure 53
Length parameters for two carriages

Two carriages
Sizes: MLFI50, MLFI140, MLFI200

$$L_2 = G_H + L + L_1 + L_{x1} + 2 \cdot L_6$$

Total length
Sizes: MLFI50, MLFI140, MLFI200

$$L_{tot} = L_2 + 2 \cdot L_4$$

Length parameters

Designation	L mm	L_1 mm	L_4 mm	L_6 mm	L_{21} mm	S mm
MLFI20-130-ZR	130	–	76	–	2	40
MLFI20-250-ZR	250					
MLFI25-130-ZR-N	130	–	65	–	2,5	40
MLFI25-250-ZR-N	250					
MLFI25-500-ZR-N	500					
MLFI34-260-ZR	260	298	69	–	1,3	85
MLFI50-250-C-ZR-N	250	260	97	6	–	85
MLFI50-250-C-LN-ZR-N						
MLFI50-500-C-ZR-N	500	510	97	6	–	85
MLFI50-500-C-LN-ZR-N						
MLFI140-240-3ZR-N	240	282	80	6	–	85
MLFI140-500-3ZR-N	500	542				
MLFI200-365-3ZR-N	365	405	115,5		–	85
MLFI200-500-3ZR-N	500	540				

Mass calculation

The total mass of an actuator is calculated from the mass of the actuator without a carriage, the carriage and the special design: multi-piece support rail (FA517) and second carriage (W2), *Figure 54*. Insert the values from the table in the following equation. The values m_{LAW} and m_{BOL} are mandatory.

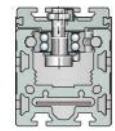

$$m_{tot} = m_{LAW} + m_{BOL} + m_1 + m_3$$

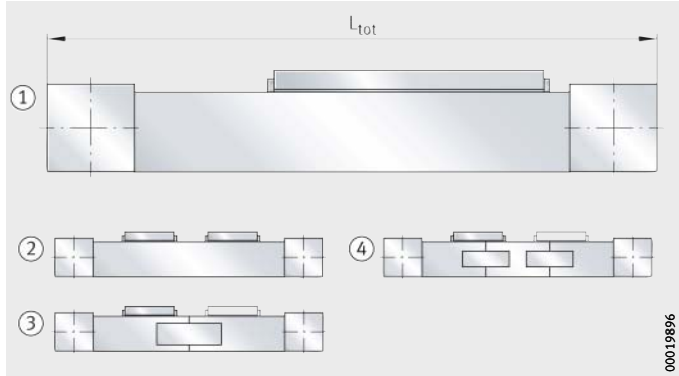

① Basic design
② Second carriage (W2)
③ Two-piece support rail (FA517.1)
④ Three-piece support rail (FA517.2)

Figure 54
Basic and additional designs

Values for mass calculation

Designation	Mass	
	Carriage m_{LAW} ≈kg	Actuator without carriage m_{BOL} ≈kg
MLFI20-130-ZR	0,25	$(L_{tot} - 152) \cdot 0{,}0022 + 0{,}72$
MLFI20-250-ZR	0,38	
MLFI25-130-ZR..-N	0,41	$(L_{tot} - 130) \cdot 0{,}003 + 0{,}76$
MLFI25-250-ZR..-N	1,2	
MLFI25-500-ZR..-N	1,7	
MLFI34-260-ZR	1,4	$(L_{tot} \cdot 0{,}007) + 1{,}4$
MLFI50-250-C-ZR..-N	2,27	$(L_{tot} - 194) \cdot 0{,}0112 + 4{,}7$
MLFI50-500-C-ZR..-N	3,22	
MLFI140-240-3ZR..-N	5,5	$(L_{tot} - 160) \cdot 0{,}0154 + 7{,}33$
MLFI140-500-3ZR..-N	8,87	
MLFI200-365-3ZR..-N	13,3	$(L_{tot} - 231) \cdot 0{,}0309 + 18{,}6$
MLFI200-500-3ZR..-N	16,5	

Values for mass calculation
(continued)

Designation	Mass Design		
	m_1		m_3
	FA517.1 ≈kg	FA517.2 ≈kg	W2 ≈kg
MLFI20-130-ZR	–	–	0,25
MLFI20-250-ZR	–	–	0,38
MLFI25-130-ZR..-N	–	–	0,41
MLFI25-250-ZR..-N	–	–	1,2
MLFI25-500-ZR..-N	–	–	1,7
MLFI34-260-ZR	–	–	1,4
MLFI50-250-C-ZR..-N	1,4	2,78	2,27
MLFI50-500-C-ZR..-N			3,32
MLFI140-240-3ZR..-N	1,84	3,69	5,5
MLFI140-500-3ZR..-N			8,87
MLFI200-365-3ZR..-N		3,68	13,3
MLFI200-500-3ZR..-N			16,5

Lubrication

The guidance system in linear actuators must be lubricated during operation.

The profiled track rollers sealed on both sides are greased with a high quality lithium soap grease and the track roller sizes used are classified as lubricated for life.

The bearing arrangement of the toothed belt return units is maintenance-free.

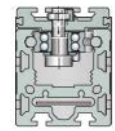

Lubrication of the guideway

The raceways are lubricated by means of lubrication and wiper units containing oil-soaked felt inserts. These inserts are supplied from the factory already soaked with oil (H1 authorisation for the food industry).

For relubrication of the guideway raceways, oils of viscosity 460 mm^2/s are recommended.

The lubrication and wiper units are integrated in the MLFI carriage and must be supplied with oil via lubrication nipples.

Relubrication intervals

The relubrication intervals are essentially dependent on the following factors:

- the travel velocity of the carriage
- the load
- the operating temperature
- the stroke length
- the environmental conditions and environmental influences
- the mounting position.

Lubrication intervals

The lubrication intervals are dependent on the environmental influences. The cleaner the environment, the smaller the quantity of lubricant consumed. The time and quantity can only be determined precisely under operating conditions since it is not possible to determine all the influences by calculation.
An observation period of adequate length must be allowed.

Fretting corrosion is a consequence of lubricant starvation and is visible as a reddish discolouration of the opposing raceway or the outer ring of the track roller. Lubricant starvation can lead to permanent damage to the system and therefore to its failure. It must be ensured that the lubrication intervals are reduced accordingly in order to prevent fretting corrosion.

Relubrication quantities

Relubrication should be carried out wherever possible with several partial quantities at various times instead of the complete quantity at the time of the relubrication interval. Grease quantities, see table.

Grease quantities

Linear actuator	Relubrication quantity per lubrication nipple and per end face ≈g
MLFI20-130-ZR MLFI20-250-ZR	1 to 2
MLFI25-130-ZR..-N MLFI25-250-ZR..-N MLFI25-500-ZR..-N	2 to 3
MLFI34-260-ZR	2 to 3
MLFI50-250-C-ZR..-N MLFI50-500-C-ZR..-N	2 to 3
MLFI140-240-3ZR..-N MLFI140-500-3ZR..-N	2 to 3
MLFI200-365-3ZR..-N MLFI200-500-3ZR..-N	4 to 5
MLFI50-250-C-LN-ZR..-N MLFI50-500-C-LN-ZR..-N	2 to 3

Relubrication procedure

Relubrication should be carried out whilst the carriage is moving and warm from operation over a minimum stroke length corresponding to one carriage length.

During lubrication, it must be ensured that the grease gun, grease, lubrication nipple and the environment of the lubrication nipple are clean.

Lubrication nipples for relubrication

The running shafts in the actuators are relubricated via lubrication devices in the carriage. Actuators of sizes 20 und 34 have drive fit lubrication nipples, *Figure 55*. Actuators of size 25 have access holes closed off by grub screws. Larger actuators have countersunk funnel type lubrication nipples.

MLFI20..-ZR
MLFI25..-ZR
MLFI34..-ZR
MLFI50..-C-ZR
MLFI140..-3ZR
MLFI200..-3ZR

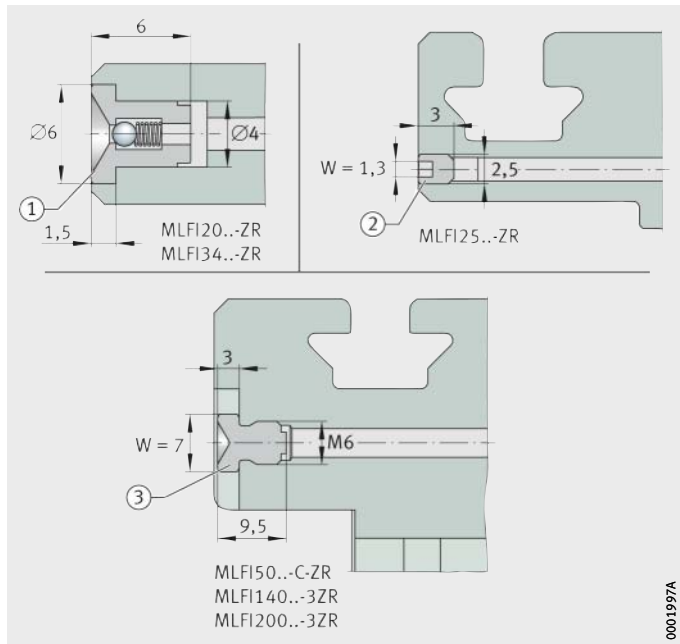

① Drive fit lubrication nipple NIP A1
② Closed off threaded hole Grub screw M2,5 DIN 913
③ Screwed-in funnel type lubrication nipple NIP DIN 3405-A M6

Figure 55
Lubrication nipple and screw plug

For relubrication, the carriage in MLFI50..-C-ZR, MLFI140..-3ZR or MLFI200..-3ZR can be connected to a semi-automatic or fully automatic central lubrication system. In this case, the funnel type lubrication nipples must be unscrewed and replaced by screw-in connectors M6×1. The central lubrication system is connected by means of pipes or hoses.

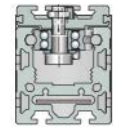

Relubrication points

The felt lubrication inserts in the lubrication and wiper units fitted are reoiled via drive fit lubrication nipples NIP A1 or via funnel type lubrication nipples to DIN 3405-A M6. Lubrication can be carried out from both end faces of the carriage, see *Figure 56* and table, page 174.

MLFI20..-ZR
MLFI34..-ZR

① Drive fit lubrication nipple NIP A1

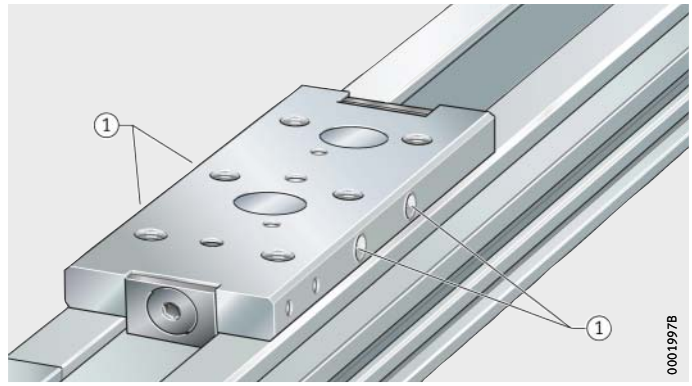

Figure 56
Lubrication points

MLFI25..-ZR

① Lubrication hole closed off using grub screw

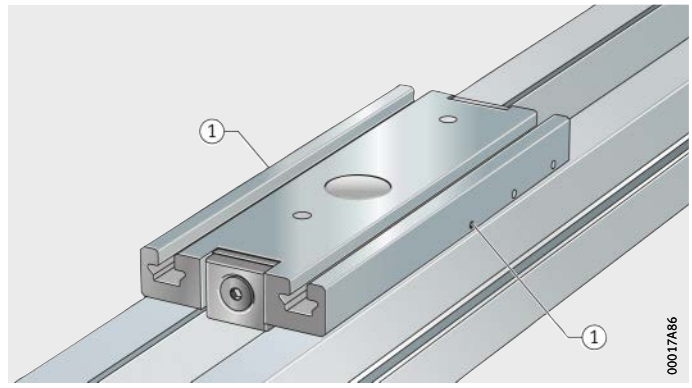

Figure 57
Lubrication points on short carriage

MLFI140..-3ZR
MLFI200..-3ZR

① Funnel type lubrication nipple DIN 3405-A M6

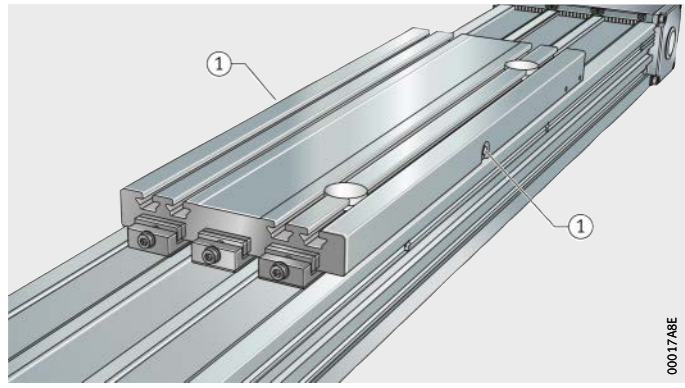

Figure 58
Lubrication points

During lubrication of linear actuators, all lubrication points on one longitudinal side of a carriage must always be provided with lubricant.

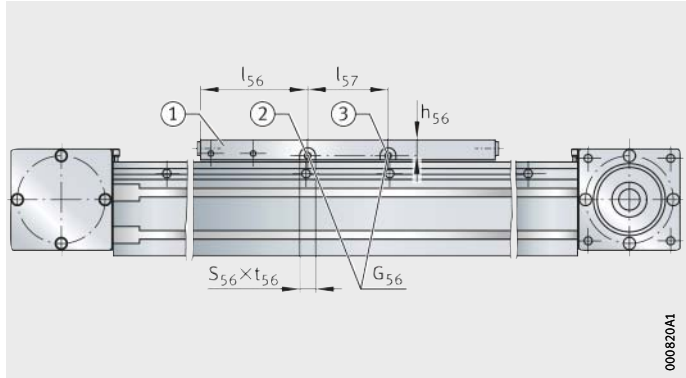

① Carriage
② Relubrication point A
③ Relubrication point B

Figure 59
Lubrication points

Position of relubrication points

Designation	Mounting dimensions					
	l_{57} mm	h_{56} mm	l_{56} mm	S_{56} mm	t_{56} mm	G_{56} mm
MLFI20-130-ZR	42,5	4,25	42,5	–	–	–
MLFI20-250-ZR	162,5					
MLFI25-130-ZR	–	11,5	7,5	–	≦5	M2,5
MLFI25-250-ZR	145		45			
MLFI25-500-ZR	395		55			
MLFI34-260-ZR	99,5	10,5	80,3	–	–	–
MLFI50-250-C..-ZR	–	13,5	125	15	5,6	M6
MLFI50-500-C..-ZR	297		101,5			
MLFI140-240-3ZR	–	20	120	15	3,5	M6
MLFI140-500-3ZR			250			
MLFI200-365-3ZR	–	28	182,5	15	3,5	M6
MLFI200-500-3ZR			250			

T-slots

The T-slots in the support rail and the carriage are designed for T-bolts according to DIN 787 and T-nuts according to DIN 508 (with the exception of T-slot size 4,5), *Figure 60*.
T-nuts and T-bolts are inserted using filling slots in the support rail.

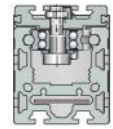

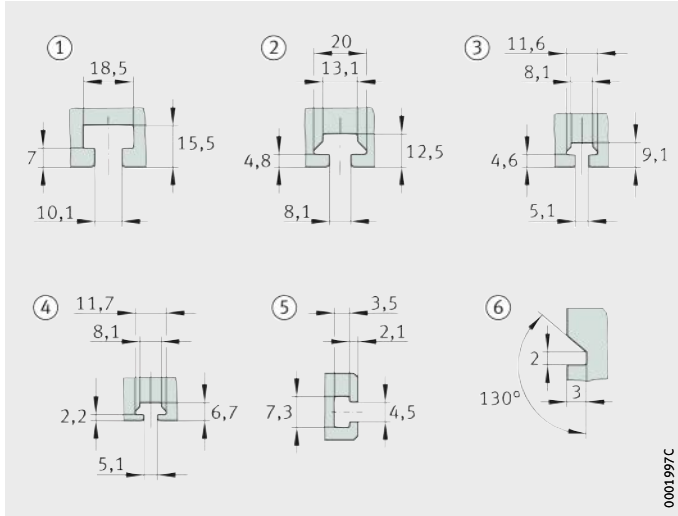

① T-slot size 10
② T-slot size 8
③ T-slot size 5
④ T-slot size 5,1
⑤ T-slot size 4,5
⑥ Clamping slot for clamping lug, only MLFI20..-ZR

Figure 60
Sizes of T-slots in support rail and carriage

Dimensions of T-slots

Designation	Support rail		Carriage	
	Lateral	Bottom	Top	Lateral
MLFI20..-ZR	④	–	–	–
MLFI25..-ZR	③	③	③	–
MLFI34..-ZR	③	③	–	–
MLFI50..-C-ZR	②	②	②	⑤
MLFI140..-3ZR	③	②	②	③
	②	②	②	③
MLFI200..-3ZR	②	①	②	②

Filling openings

The filling openings, *Figure 61* and table, are always located on the opposing side to the drive.

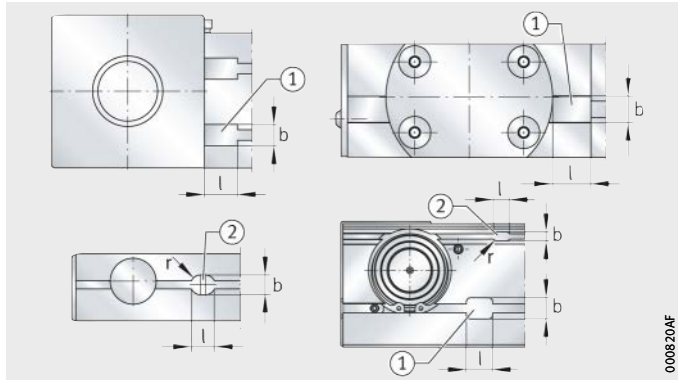

① Rectangular filling opening
② Oval filling opening

Figure 61
Filling openings in support rail

Dimensions of filling openings in support rails

Designation	T-slot	Rectangular ①		Oval ②		
		b	l	b	l	r
MLFI20..-ZR	5	10	12	–	–	–
MLFI25..-ZR..-N	5	–	–	12	15	6
MLFI34..-ZR	5	15	12	5,2	5	2,5
MLFI50..-C-ZR..-N	8	16	25	–	–	–
MLFI140..-3ZR..-N	5	12	25	–	–	–
	8	16				
MLFI200..-3ZR..-N	8	16	25	–	–	–
	10	18,5				

Connectors for switching tags

Switching tags can be screw mounted to the carriage in order to activate switches in the adjacent construction. The position and size are dependent on the size, *Figure 62*, *Figure 63* and table.

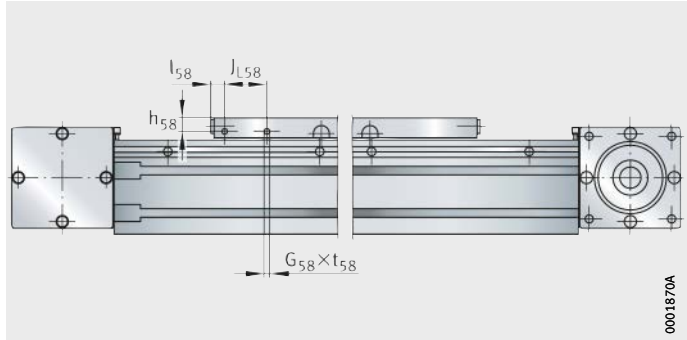

Figure 62
Connectors for switching tags on the carriage

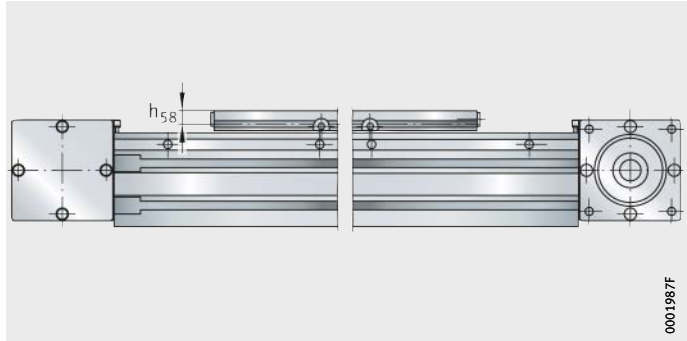

Figure 63
Connectors for switching tags on carriage of series MLFI50-C-ZR

Mounting dimensions for switching tags

Series Actuator	Mounting dimensions				
	J_{L58} mm	l_{58} mm	h_{58} mm	G_{58} mm	$t_{58\ max}$ mm
MLFI20-130-ZR	20	5,5	5	M3	7
MLFI20-250-ZR					
MLFI25-130-ZR	40	10	11,2	M3	6
MLFI25-250-ZR		105			
MLFI25-500-ZR		230			
MLFI34-260-ZR	15	122,5	8,2	M3	10
MLFI50-250-C..-ZR	–	–	12	–	–
MLFI50-500-C..-ZR					
MLFI140-240-3ZR	40	10	23,3	M5	12
MLFI140-500-3ZR					
MLFI200-365-3ZR	40	10	29	M5	12
MLFI200-500-3ZR					

Mounting position and mounting arrangement

Due to their construction and the linear guidance system fitted, actuators are suitable for all mounting positions and mounting arrangements. Possible mounting positions, *Figure 64* and *Figure 65*.

The actuators can be used in the “common” horizontal mounting position and also in a vertical mounting position.
In particular, the actuators MLFI140..-3ZR and MLFI200..-3ZR with a triple toothed belt drive and the associated level of security offer good characteristics for the vertical mounting position.

Mounting of actuators with a carriage to one side or suspended overhead is possible. In such cases, please consult the Schaeffler engineering service.

The load carrying capacities and load safety factors to be observed differ as a function of the mounting position, see page 12 and Product preselection matrix, page 138.

The carriage and load must be secured against autonomous travel or dropping if the actuators are used in a vertical or tilted mounting position. This can be achieved, for example, by means of a brake or counterweight. The drop guard must function in manual operation as well as in motor operation, especially if the motor has no current.

Safety guidelines (especially in relation to personal protection) must be observed.

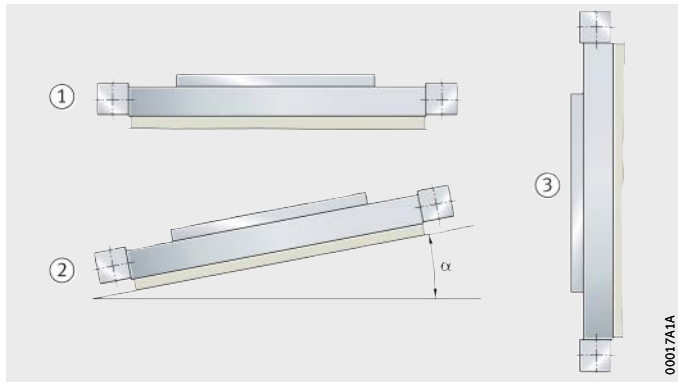

① Horizontal
② Tilted
③ Vertical

Figure 64
Mounting positions

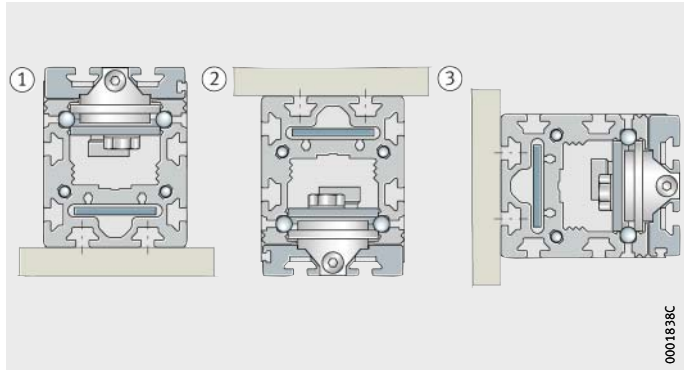

① Mounting position 0°
② Mounting position 180°
③ Mounting position 90°

Figure 65
Mounting positions

Mounting

The normal steps in the mounting of an actuator are as follows:

- location of the support rail on the adjacent construction
- mounting of the components to be moved on the carriage or carriages.

Actuators longer than 8 000 mm

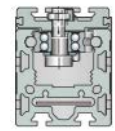

Actuators longer than 8 000 mm are supplied as multi-piece units, *Figure 66*. These are supplied partially assembled after function checking. At their destination, these actuators must then be assembled in accordance with the fitting manual supplied.

Any parts necessary for joining of the support rail segments and screw mounting of the second return unit are also supplied. This include retaining plates, fixing screws, nuts and dowels.

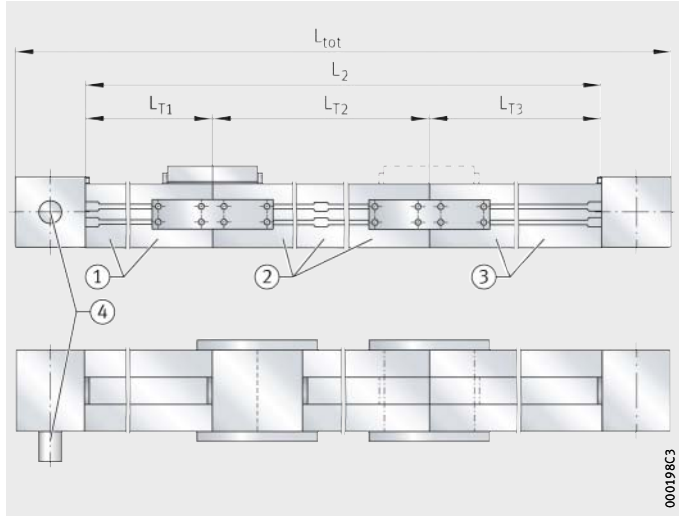

① Support rail segment 1, L_{T1} is always the first segment after the drive
② Support rail segment 2
③ Support rail segment 3
④ Drive

Figure 66
Actuators longer than 8 000 mm, L_{T1} is always on the drive side

Support rails in multi-piece actuators must be supported at their joints both during assembly and during operation.

Interchange of actuator components

For the fitting and assembly of actuator components, a fitting and maintenance manual is available for each series of actuator. Please consult the Schaeffler engineering service.

Maintenance

Failure to carry out maintenance, incorrect maintenance, assembly errors and lubrication errors as well as inadequate protection against contamination can lead to premature failure of actuators.

Maintenance work is restricted in general to relubrication, cleaning and regular visual inspection for damage.

Maintenance intervals, especially the intervals between relubrication, are influenced by:

- the travel velocity of the carriage
- the load
- the temperature
- the stroke length
- the environmental conditions and influences.

Guidance parts relevant to function must be greased and supplied with lubricant via appropriate lubrication points.

Cleaning

If heavy contamination is present, actuators must be cleaned in order to ensure reliable function. Suitable cleaning tools include paintbrushes, soft brushes and soft cloths.

Abrasives, petroleum ether and oils must not be used.

Accuracy
Length tolerances

The length tolerances of actuators are shown in *Figure 67* and the table.

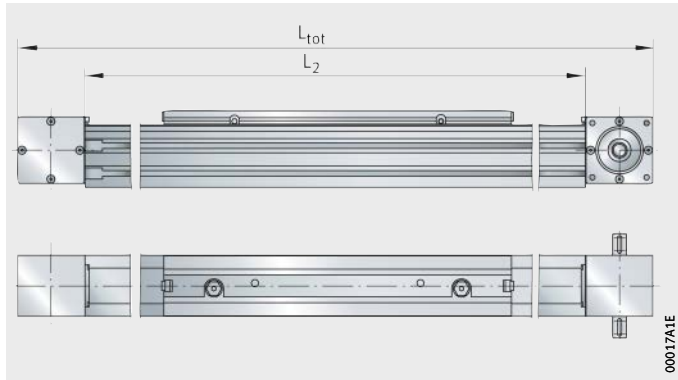

L_{tot} = total length
L_2 = length of support rail

Figure 67
Length tolerances

Tolerances

Total length L_{tot} of actuator mm		Tolerance mm
Single-piece actuator	$L_{tot} < 1\,000$	±2
	$1\,000 \leqq L_{tot} < 2\,000$	±3
	$2\,000 \leqq L_{tot} < 4\,000$	±4
	$4\,000 \leqq L_{tot}$	±5
Multi-piece actuator[1)]	$24\,000 \leqq L_{tot}$	±0,1% of L_{tot}

[1)] Not possible for actuators MLFI20..-ZR, MLFI34..-ZR and MLFI25..-ZR..-N.

Straightness of support rails

The support rails in actuators are precision straightened and the tolerances are better than DIN 17615.

The tolerances are arithmetic mean values and are stated for individual series and sizes, see table.

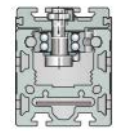

Tolerances

Length L_2 of support rail	MLFI20..-ZR			MLFI25..-ZR			MLFI50..-C..-ZR		
	t_2	t_3	Torsion	t_2	t_3	Torsion	t_2	t_3	Torsion
mm	mm	mm	mm	mm	mm	mm	mm	mm	mm
$L_2 \leqq 1\,000$	0,4	0,3	0,8	0,4	0,3	0,3	0,4	0,3	0,8
$1\,000 < L_2 \leqq 2\,000$	0,8	0,5	1	0,8	0,6	0,6	0,8	0,5	1
$2\,000 < L_2 \leqq 3\,000$	–	–	–	1,2	0,9	0,9	1,2	0,7	1,2
$3\,000 < L_2 \leqq 4\,000$	–	–	–	1,5	1,2	1,2	1,5	1	1,6
$4\,000 < L_2 \leqq 5\,000$	–	–	–	–	–	–	1,9	1,2	1,8
$5\,000 < L_2 \leqq 6\,000$	–	–	–	–	–	–	2,5	1,5	2
$6\,000 < L_2 \leqq 7\,000$	–	–	–	–	–	–	2,9	1,8	2,2
$7\,000 < L_2$	–	–	–	–	–	–	3,4	2,1	2,4

Tolerances continued

Length L_2 of support rail	MLFI140..-3ZR			MLFI200..-3ZR			MLFI34..-ZR		
	t_2	t_3	Torsion	t_2	t_3	Torsion	t_2	t_3	Torsion
mm	mm	mm	mm	mm	mm	mm	mm	mm	mm
$L_2 \leqq 1\,000$	0,6	0,5	0,5	0,8	0,7	0,5	0,4	0,3	0,3
$1\,000 < L_2 \leqq 2\,000$	1	0,7	1	1,2	0,9	1	0,8	0,6	0,6
$2\,000 < L_2 \leqq 3\,000$	1,4	0,9	1,5	1,6	1,1	1,5	1,2	0,9	0,9
$3\,000 < L_2 \leqq 4\,000$	1,7	1,2	2	1,9	1,4	2	1,5	1,2	1,2
$4\,000 < L_2 \leqq 5\,000$	2,1	1,4	2,5	2,3	1,6	2,5	1,9	1,5	1,5
$5\,000 < L_2 \leqq 6\,000$	2,7	1,7	3	2,9	1,9	3	2,5	1,8	1,8
$6\,000 < L_2 \leqq 7\,000$	3,1	2	3,5	3,3	2,2	3,5	–	–	–
$7\,000 < L_2$	3,6	2,3	4	3,8	2,5	4	–	–	–

Figure 68 shows the method for determining the straightness of the support rail.

t_2, t_3 = straightness tolerance

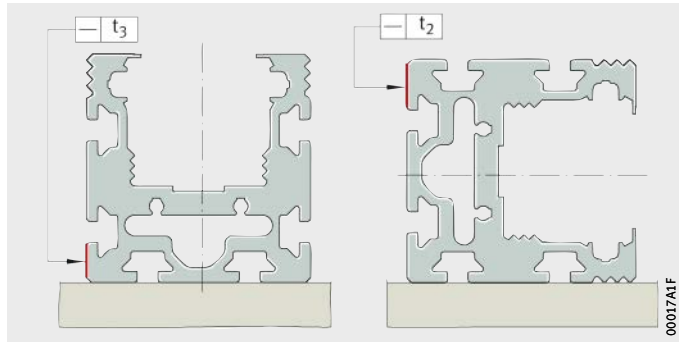

Figure 68
Measurement method for straightness tolerances

Ordering example, ordering designation

Available designs of linear actuators MLFI, see table.

Available designs

Design	Linear actuator with internal track roller guidance system		
Size	Size code		
Carriage length	Length	L	mm
Design	Basic	●	
	Low Noise	LN	
Drive variants	Toothed belt	ZR	
	3 toothed belts	3 ZR	
Drive variants	Drive shaft	●	
Additional carriage	Second, driven carriage	W2	
	Spacing between carriages	L_{x1}	mm
Anti-corrosion protection	Corrosion-resistant design	RB	
Location of carriage	Threaded holes		
	T-slots	N	
Support rail	Single-piece		
	Two-piece	FA517.1	
	Support rail segment lengths	L_{T1}	mm
		L_{T2}	mm
	Three-piece	FA517.2	
	Support rail segment lengths	L_{T1}	mm
		L_{T2}	mm
		L_{T3}	mm
Lengths	Total length	L_{tot}	mm
	Total stroke length	G_H	mm

● Standard scope of delivery.

■ Design not available.

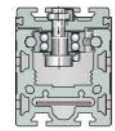

Designation and suffixes MLFI					
20	25	34	50	140	200
130, 250	130, 250, 500	260	250, 500	240, 500	365, 500
●	●	●	C	●	●
■	■	■	C-LN	■	■
ZR	ZR	ZR	ZR	■	■
■	■	■	■	3 ZR	3 ZR
AL, AR, RL, AL-AL, AL-AR, AL-RL, AR-AL, AR-AR, AR-RL, RL-AL, RL-AR, RL-RL, OZ					
W2	W2	W2	W2	W2	W2
State value for L_{x1} ($L_{x1} \geqq 50$ mm)				State value for L_{x1} ($L_{x1} \geqq 100$ mm)	
■	RB	■	RB	■	■
●	■	●	■	■	■
■	N	■	N	N	N
●	●	●	●	●	●
■	■	■	FA517.1		
			State value for L_{T1} and L_{T2}, see page 165. If these lengths are not stated, L_{T1} and L_{T2} will be determined by Schaeffler.		
■	■	■	FA517.2		
			State value for L_{T1}, L_{T2} and L_{T3}, see page 165. If these lengths are not stated, L_{T1}, L_{T2} and L_{T3} will be determined by Schaeffler.		
to be calculated from total stroke length, see page 165					
to be calculated from effective stroke length, see page 165					

Internal track roller guidance system, toothed belt drive

Example 1

Linear actuator with internal track roller guidance system	MLFI
Size code	50
Carriage length L	250 mm
Basic design	C
Drive by toothed belt	ZR
Drive shaft on left side	AL
Corrosion-resistant design	RB
Carriage with T-slots	N
Two-piece support rail with support rail segment lengths L_{T1} = 4 472 mm and L_{T2} = 4 000 mm	FA517.1
Total length L_{tot}	8 666 mm
Total stroke length G_H	8 200 mm

Ordering designation

MLFI50-250-C-ZR-AL-RB-N-FA517.1/8666-8200
(L_{T1} = 4 472 mm and L_{T2} = 4 000 mm), *Figure 69*

Note total length of carriage. Support rail segment lengths L_{T1} and L_{T2} must be stated.

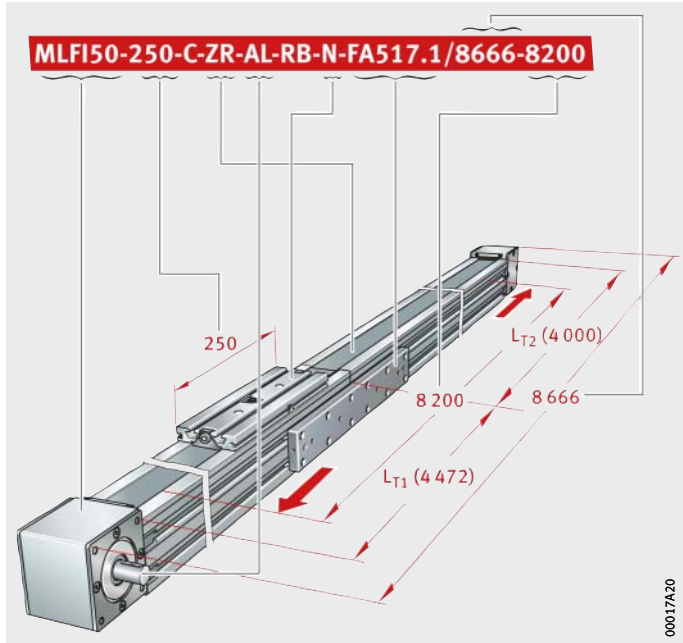

Figure 69
Ordering designation

Example 2	Linear actuator with internal track roller guidance system	MLFI
	Size code	20
	Carriage length L	130 mm
	Basic design	–
	Drive by toothed belt	ZR
	Drive shaft on left side	AL
	Carriage with threaded holes	–
	Total length L_{tot}	1 960 mm
	Total stroke length G_H (effective stroke length + 2×S)	1 644 mm

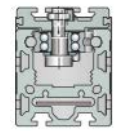

Ordering designation **MLFI20-130-ZR-AL/1960-1644**, *Figure 70*

Note! Note total length of carriage.

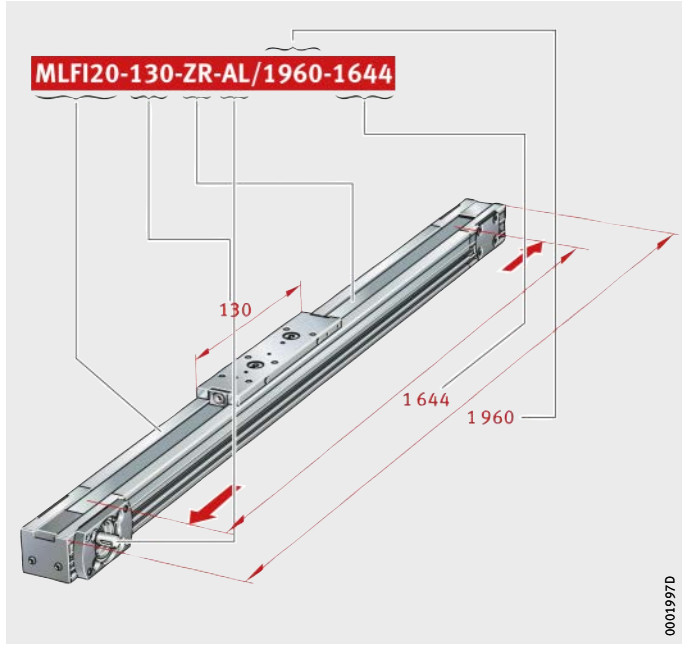

Figure 70
Ordering designation

Example 3	Linear actuator with internal track roller guidance system	MLFI
	Size code	200
	Carriage length L	365 mm
	Basic design	–
	Drive by 3 toothed belts	3ZR
	Drive shaft on left side	AL
	Carriage with T-slots	N
	Total length L_{tot}	4 648 mm
	Total stroke length G_H (effective stroke length + 2×S)	4 000 mm

Ordering designation **MLFI200-365-3ZR-AL-N/4648-4000**, *Figure 71*

Note! Note total length of carriage.

Figure 71
Ordering designation

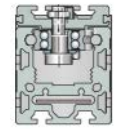

Actuators

Internal track roller guidance system
Toothed belt drive
Basic design

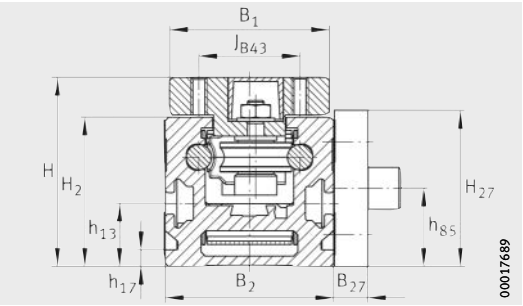

MLFI20..-ZR

Dimension table · Dimensions in mm

Designation	Dimensions			Mounting dimensions										
	B_2	H	L	B_1	B_{27}	d_{85}	d_{86}	D_{86} H7	G_{43}	G_{87}	h_{13}	h_{17}	h_{85}	h_{87}
MLFI20-130-ZR	40	45	130	38	8	10	25	34	M5	M5	15	4[1]	18,8	27
MLFI20-250-ZR			250											

Calculation of lengths L_2 and L_{tot}, see page 165.

1) Slot for location using clamping lug SPPR 12×20.

2) ① Lubrication nipple NIP A1, see page 172.
② Filling openings in carrier profile, see page 175.
③ Switching tag connectors on carriage, see page 177.

3) Integrated return unit.

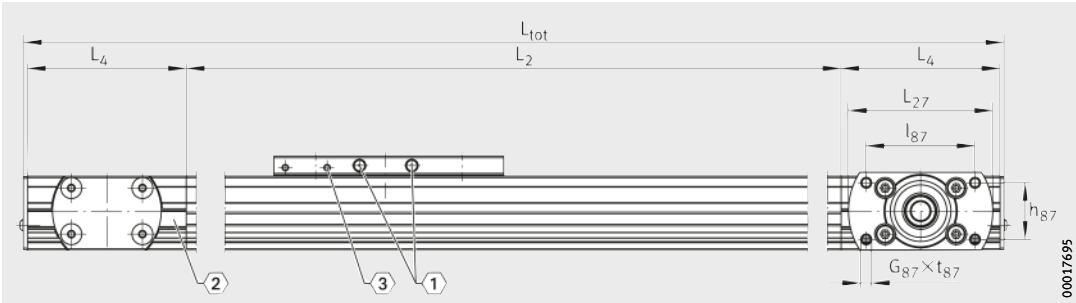

MLFI20-130-ZR
1, 2, 3 [2)]

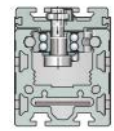

H_2	H_{27}	J_{B43}	J_{L43}	J_{L44}	J_{L45}	l_{87}	L_4	L_{21}	L_{27}	L_{88}	N_{B85}	N_{L85}	N_{T85}	t_{43} max.	t_{87} max.	T_{86}
35,5	37,3	24	$70^{+0,2}$	– / 140	– / 210	52	76	2	69	7,8	3^{P9}	10	1,8	8	8	3

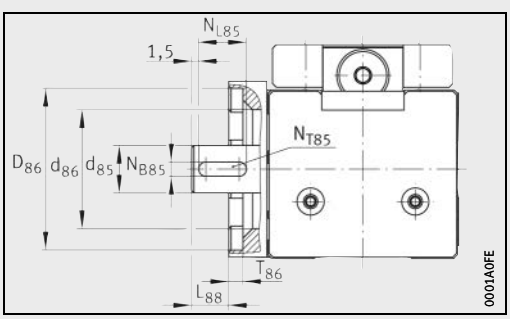

MLFI20..-ZR · Drive flange, drive shaft

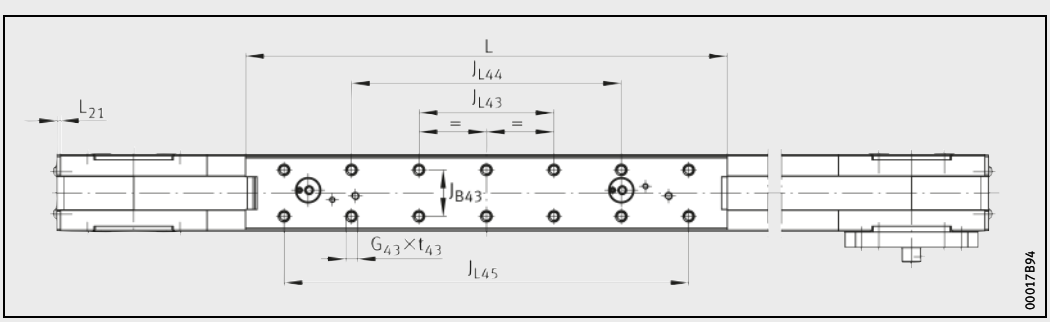

MLFI20-250-ZR · Top view

Actuators

Internal track roller guidance system
Toothed belt drive
Basic design

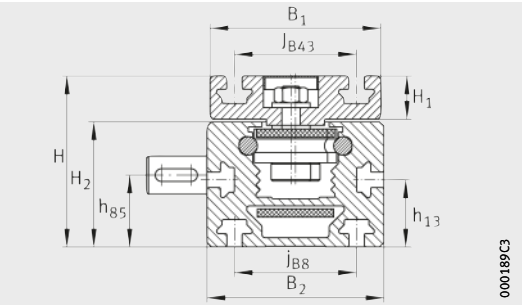

MLFI25..-ZR-N

Dimension table · Dimensions in mm

Designation	Dimensions				Mounting dimensions											
	B_2	H	L	L_1	B_1	d_{85}	D_{86} H7	G_{43}	G_{87}	h_{13}	h_{14}	h_{56}	h_{85}	h_{87}	H_1	H_2
MLFI25-130-ZR-N	58	56	130	–	56	12	28	–	M5	22	–	11	24,2	23	14,2	41
MLFI25-250-ZR-N			250													
MLFI25-500-ZR-N			500													
MLFI34-260-ZR	65	85	260	298	63	16	47	M6	M6	22	62,7	30	43,5	51	14,2	70

Calculation of lengths L_2 and L_{tot}, see page 165.

1) ① Lubrication nipple NIP A1, see page 172.
② Filling openings in carrier profile, see page 175.
③ Switching tag connectors on carriage, see page 177.

2) Integrated return unit.

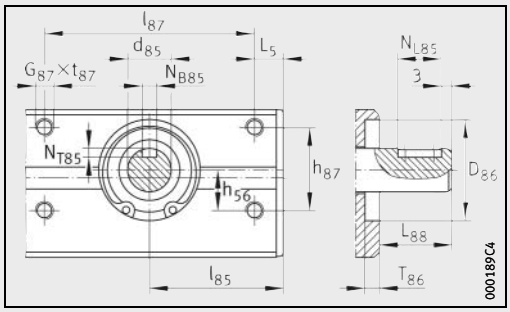

MLFI25..-ZR-N · Drive flange, drive shaft

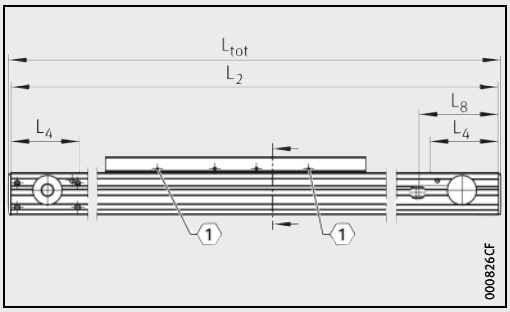

MLFI25..-ZR-N · Top view
① 1)

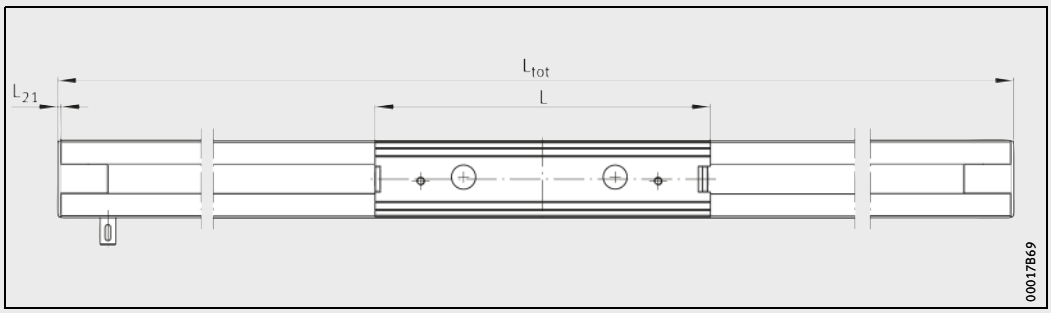

MLFI25..-ZR-N · Top view

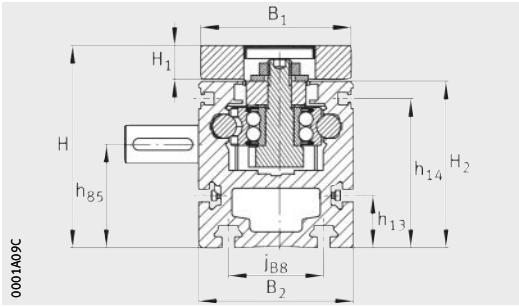

MLFI34-260-ZR

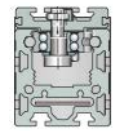

j_{B8}	J_{B43}	J_{L43}	J_{L44}	l_{85}	l_{87}	L_4	L_5	L_8	L_{21}	L_{88}	N_{B85}	N_{L85}	N_{T85}	t_{43} max.	t_{87} max.	T_{86}
40	40	–	–	37,5	58	65	8,5	76	2,5	20,5	4^{P9}	12	2,5	–	10	$3{,}7^{+0{,}2}$
40	45	80	240	39,3	60	69	9,3	77,5	1,3	31	5	25	3	14	12	1,6

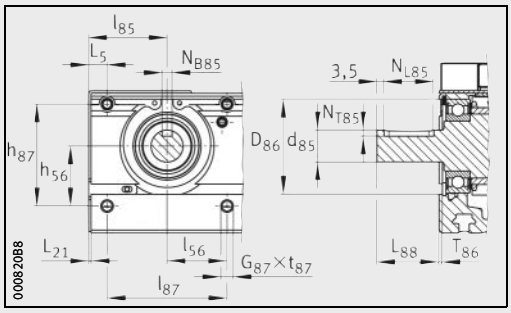

MLFI34-260-ZR · Drive flange, drive shaft

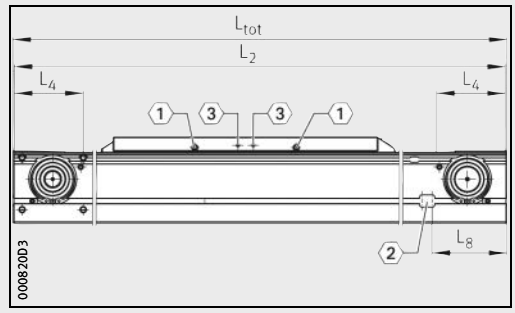

MLFI34-260-ZR
1, 2, 3 [1) 2)]

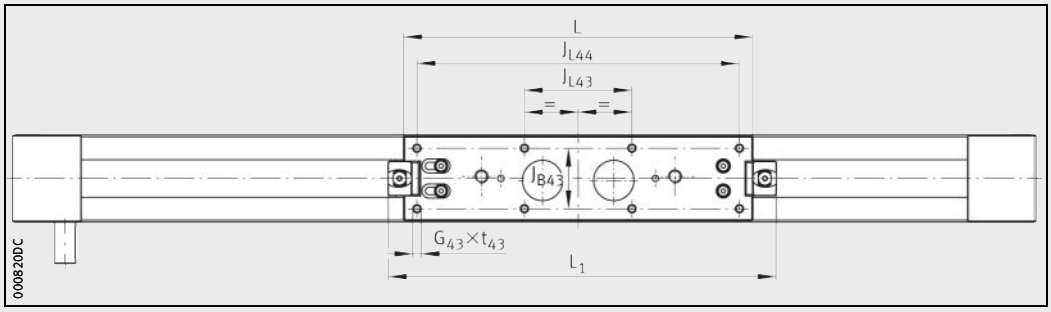

MLFI34-260-ZR · Top view

Actuators

Internal track roller guidance system
Toothed belt drive
Basic design
Low Noise actuators

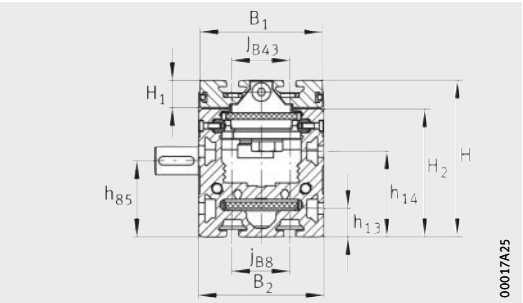

MLFI50..-C-ZR-N

Dimension table · Dimensions in mm

Designation	Dimensions			Mounting dimensions									
	B_2	H	L	B_1	B_4 max.	d_{85} h7	d_{86}	D_{86} G7	D_{87}	G_{87}	h_{13}	h_{14}	h_{85}
MLFI50-250-C-ZR-N	88	110	250	86	89,2	20	61	68	110	M6	20	60	53,4
MLFI50-250-C-LN-ZR-N													
MLFI50-500-C-ZR-N	88	110	500	86	89,2	20	61	68	110	M6	20	60	53,4
MLFI50-500-C-LN-ZR-N													

Calculation of lengths L_2 and L_{tot}, see page 165.

1) Utilisation of the T-slots is restricted by the holes.

2) ① Lubrication nipple NIP DIN 3415-A M6, see page 172.
② Filling openings in carrier profile, see page 175.
③ Switching tag connectors on carriage, see page 177.

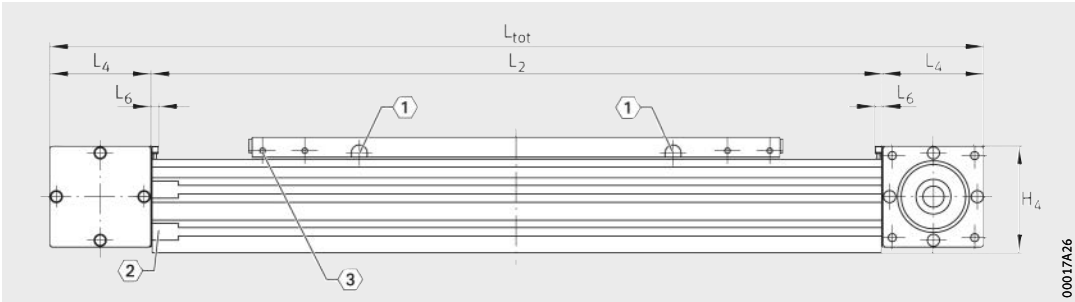

MLFI50-500-C-ZR-N
1, 2, 3 [2)]

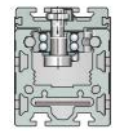

H_1	H_2	H_4	j_{B8}	J_{B43}	l_{41} [1)]	l_{42} [1)]	L_1	L_4	L_6	L_{88}	N_{B85}	N_{L85}	N_{T85}	S_{41} [1)]	t_{87} max.	T_{86}
19	90	101,4	40	40	58,8	81,5	260	97	6	31	6^{P9}	25	3,5	28	24	$2,3^{+0,3}$
19	90	101,4	40	40	144	288	510	97	6	31	6^{P9}	25	3,5	28	24	$2,3^{+0,3}$

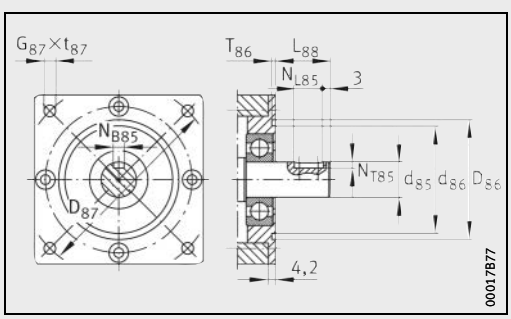

MLFI50..-C-ZR-N · Drive flange, drive shaft

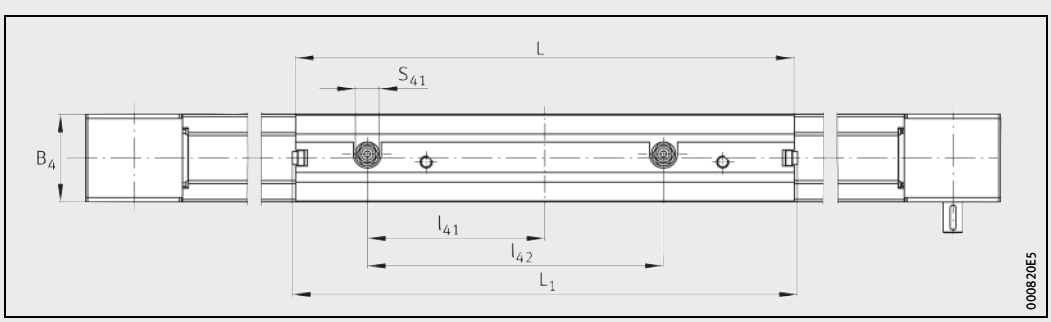

MLFI50-500-C-ZR-N · Top view

Actuators

Internal track roller guidance system
Triple toothed belt drive
Basic design

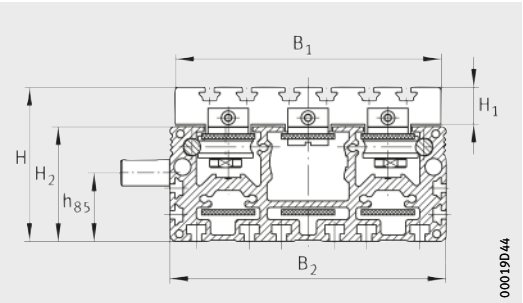

MLFI..-3ZR-N

Dimension table · Dimensions in mm

Designation	Dimensions			Mounting dimensions												
	B_2	H	L	B_1	B_4	B_{72}	d_{85} h7	d_{86}	D_{86} G7	D_{87}	G_{87}	h_{13}	h_{14}	h_{85}	H_1	H_2
MLFI140-240-3ZR-N	180	105	240	176	195	2	25	61	70	80	M6	25	45	44	29,3	74,5
MLFI140-500-3ZR-N			500													
MLFI200-365-3ZR-N	260	145	365	250	263	2	32	76	95	115	M8	25	50	63	35	108
MLFI200-500-3ZR-N			500													

Calculation of lengths L_2 and L_{tot}, see page 165.

[1] ① Lubrication nipple NIP DIN 3405-A M6, see page 172.
② Filling openings in carrier profile, see page 175.
③ Switching tag connectors on carriage, see page 177.

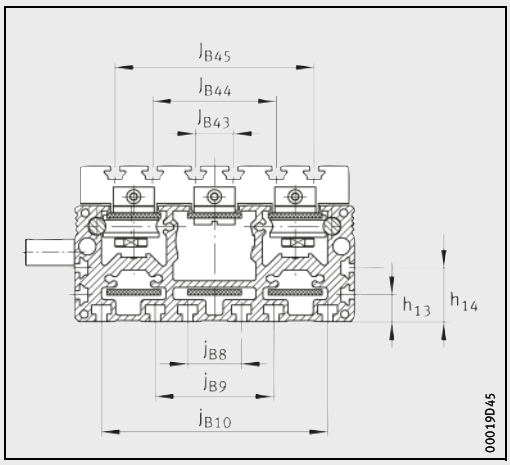

MLFI..-3ZR-N

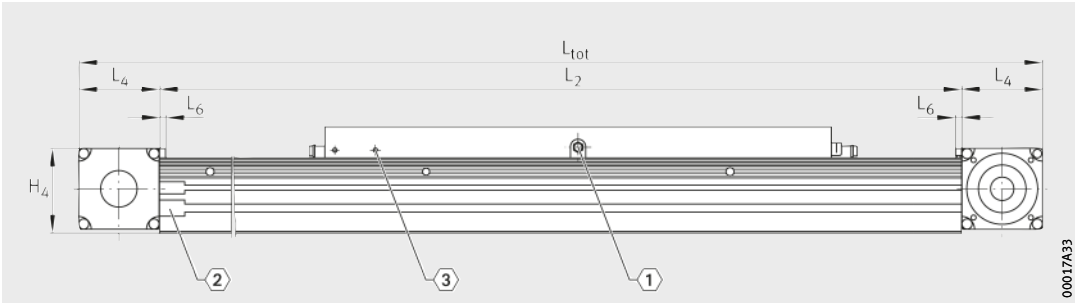

MLFI..-3ZR-N
1, 2, 3 [1)]

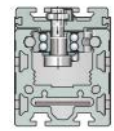

H_4	j_{B8}	j_{B9}	j_{B10}	J_{B43}	J_{B44}	J_{B45}	l_{41}	L_1	L_4	L_6	L_{88}	N_{B85}	N_{L85}	N_{T85}	S_{41}	t_{87} max.	T_{86}
84	70	140	–	80	130	–	94	282	80	6	45	8^{P9}	25	4	30	12	$2,3^{+0,3}$
							354	542									
120,5	50	110	210	35	115	185	209	405	115,5	6	60	10^{P9}	32	5	36,5	15	$4^{+0,5}$
							344	540									

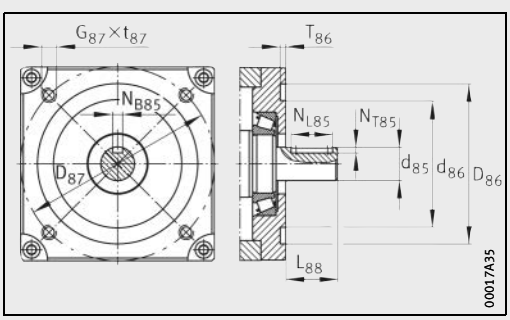

MLFI..-3ZR-N · Drive flange, drive shaft

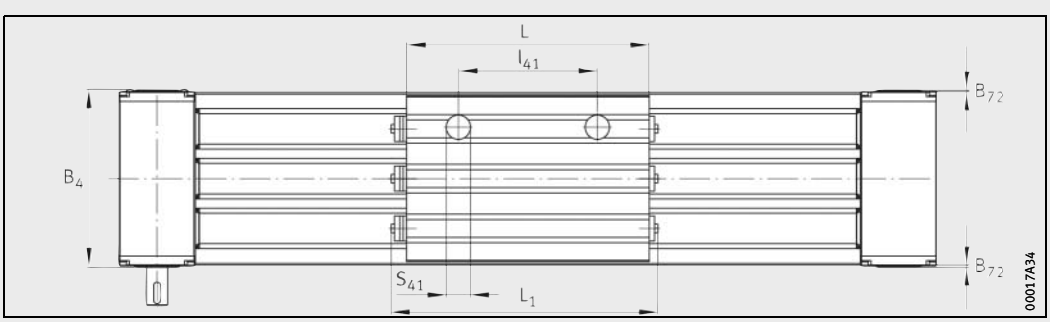

MLFI..-3ZR-N · Top view

Actuators

Internal track roller guidance system
Toothed belt drive
Multi-piece support rail

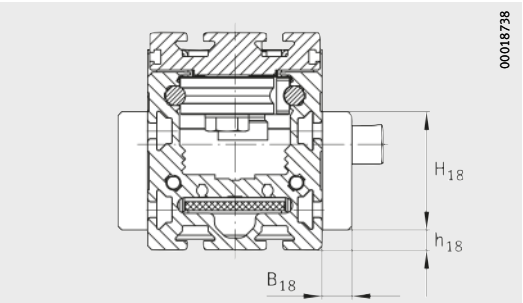

MLFI50..-C-ZR-N-FA517

Dimension table · Dimensions in mm

Designation	
Two segments[1)]	Three segments[1)]
MLFI50-250-C-ZR-N-FA517.1	**MLFI50-250-C-ZR-N-FA517.2**
MLFI50-500-C-ZR-N-FA517.1	**MLFI50-500-C-ZR-N-FA517.2**
MLFI50-250-C-LN-ZR-N-FA517.1	**MLFI50-250-C-LN-ZR-N-FA517.2**
MLFI50-500-C-LN-ZR-N-FA517.1	**MLFI50-500-C-LN-ZR-N-FA517.2**
MLFI140-240-3ZR-N-FA517.1	**MLFI140-240-3ZR-N-FA517.2**
MLFI140-500-3ZR-N-FA517.1	**MLFI140-500-3ZR-N-FA517.2**
MLFI200-365-3ZR-N-FA517.1	**MLFI200-365-3ZR-N-FA517.2**
MLFI200-500-3ZR-N-FA517.1	**MLFI200-500-3ZR-N-FA517.2**

Other geometrical features, see page 188 and page 189.

1) Support rails: segment lengths (L_{Tn} ≧ 500 mm), see page 165.

2) ① The segment lengths L_{Tn} must always be designated in ascending order starting from the drive side.

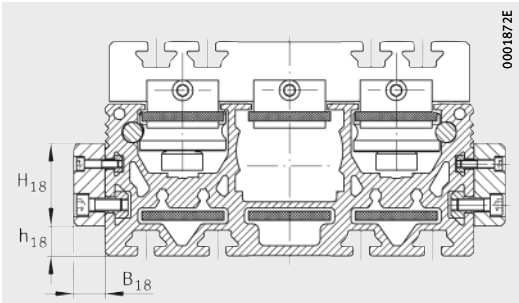

MLFI140..-3ZR-N-FA517

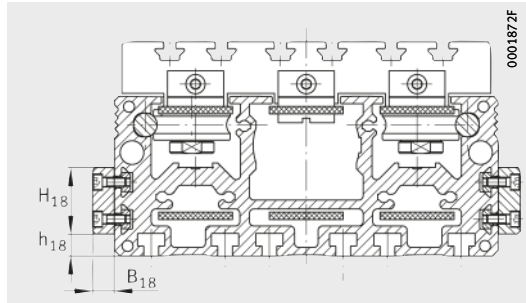

MLFI200..-3ZR-N-FA517

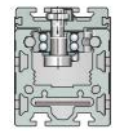

Mounting dimensions			
B_{18}	h_{18}	H_{18}	L_{18}
15	10	60	400
15	2	50	400
15	15	45	400

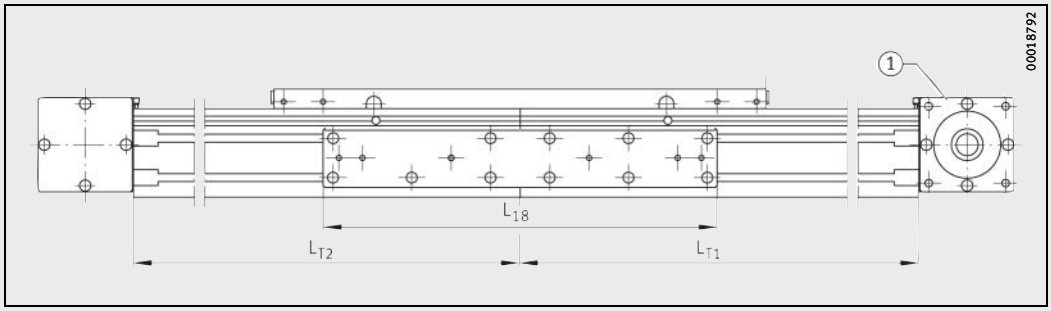

MLFI50..-C..-ZR-N-FA517.1, MLFI..-3ZR-N-FA517.1 · Two segments
1 2)

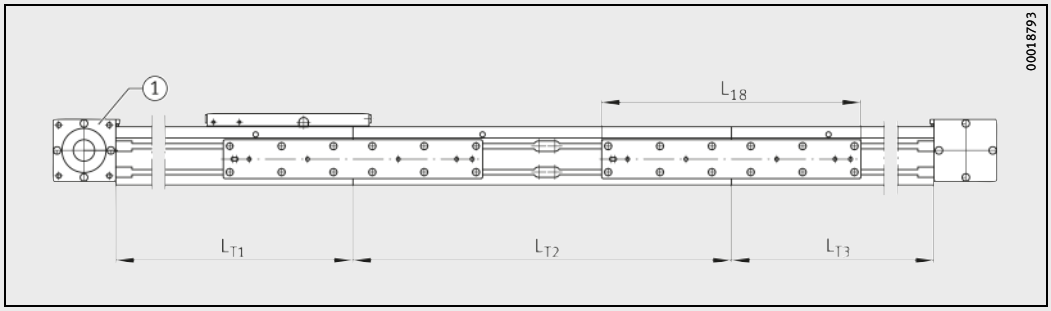

MLFI50..-C..-ZR-N-FA517.2, MLFI..-3ZR-N-FA517.2 · Three segments
1 2)

Actuators

Internal track roller guidance system
Toothed belt drive
Performance data

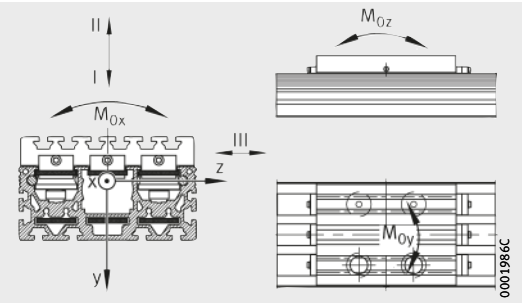

Load directions

Performance data

Designation	Carriage unit guidance system for each carriage unit								
	Basic load ratings per carriage unit						Permissible static moment ratings per carriage unit[1]		
	Load direction I Compressive load		Load direction II Tensile load		Load direction III Lateral load				
	dyn. C N	stat. C_0 N	dyn. C N	stat. C_0 N	dyn. C N	stat. C_0 N	$M_{0x\ per}$ Nm	$M_{0y\ per}$ Nm	$M_{0z\ per}$ Nm
MLFI20-130-ZR (-W2)	850	400	850	400	1 500	1 100	4,7	15,5	9
MLFI20-250-ZR (-W2)	1 100	560	1 100	560	2 000	1 400		114	48
MLFI25-130-ZR-N (-W2)	1 750	955	1 750	955	6 000	3 800	15	65	33
MLFI25-250-ZR-N (-W2)	3 400	2 050	3 400	2 050	7 000	4 150	32	290	135
MLFI25-500-ZR-N (-W2)								825	390
MLFI34-260-ZR (-W2)	10 300	5 400	10 300	5 400	5 100	2 500	120	480	255
MLFI50-250-C-ZR-N (-W2, -FA517)	6 500	3 360	6 500	3 360	3 300	1 500	82	216	150
MLFI50-500-C-ZR-N (-W2, -FA517)	11 400	5 200	11 400	5 200	8 000	3 500	129	1 590	810
MLFI50-250-C-LN-ZR-N (-W2, -FA517)	6 500	3 360	6 500	3 360	3 300	1 500	82	216	150
MLFI50-500-C-LN-ZR-N (-W2, -FA517)	11 400	5 200	11 400	5 200	8 000	3 500	129	1 590	810
MLFI140-240-3ZR-N (-W2, -FA517)	17 500	8 000	17 500	8 000	27 600	14 800	610	700	380
MLFI140-500-3ZR-N (-W2, -FA517)								2 630	1 450
MLFI200-365-3ZR-N (-W2, -FA517)	21 000	9 400	21 000	9 400	35 000	19 500	1 000	2 000	980
MLFI200-500-3ZR-N (-W2, -FA517)								3 360	1 700

1) The values are single loads and apply when the underside of the actuator is fully supported.
If there are several carriages per actuator or combined loads are present, these must be reduced.

2) Maximum permissible drive torque on drive stud.

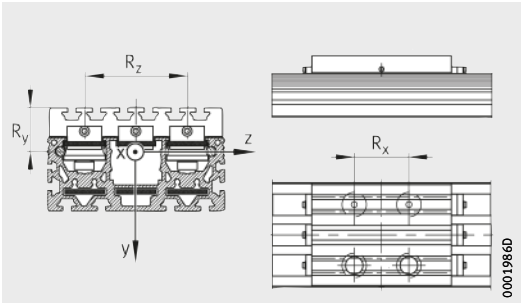

Mounting geometry of track rollers

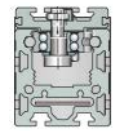

Track rollers	Spacings R_x mm	Spacings R_y mm	Spacings R_z mm	Moment of inertia of area of carrier profile I_y cm^4	Moment of inertia of area of carrier profile I_z cm^4	Drive: Feed per revolution mm	Drive: Maximum drive torque[2)] Nm	Toothed belt: Type	Toothed belt: Mass m kg/m	Toothed belt: Permissible operating force N	Toothed gears: Mass moment of inertia $kg \cdot cm^2$
4×LFR50/5-6-2Z	42,5 162,5	19	3	11,96	7,7	81	2,3	20AT3	0,044	175	0,024
3×LFR50/8-6-2Z	57	22,7	3	46	17	85	5,6	25AT5	0,082	420	0,1
4×LFR50/8-6-2Z	113 363										
4×LFR5201-10-2Z	53	33,9	3	84	107	144	32	W8PU32STD	0,36	1 400	–
4×LFR5201-10-2Z	82,3 332,3 82,3 332,3	32	8,5	300	198	200	68,8	50AT10 50BATK10	0,315 0,3	1 880	5
4×LFR5301-10-2Z	94 354	44,5	104,5	1 636	200	160	115	40AT10	0,75	4 500	8,2
4×LFR5204-16-2Z	209 344	56,3	155	7 069	899	230	207	50AT10	0,945	5 640	35,2

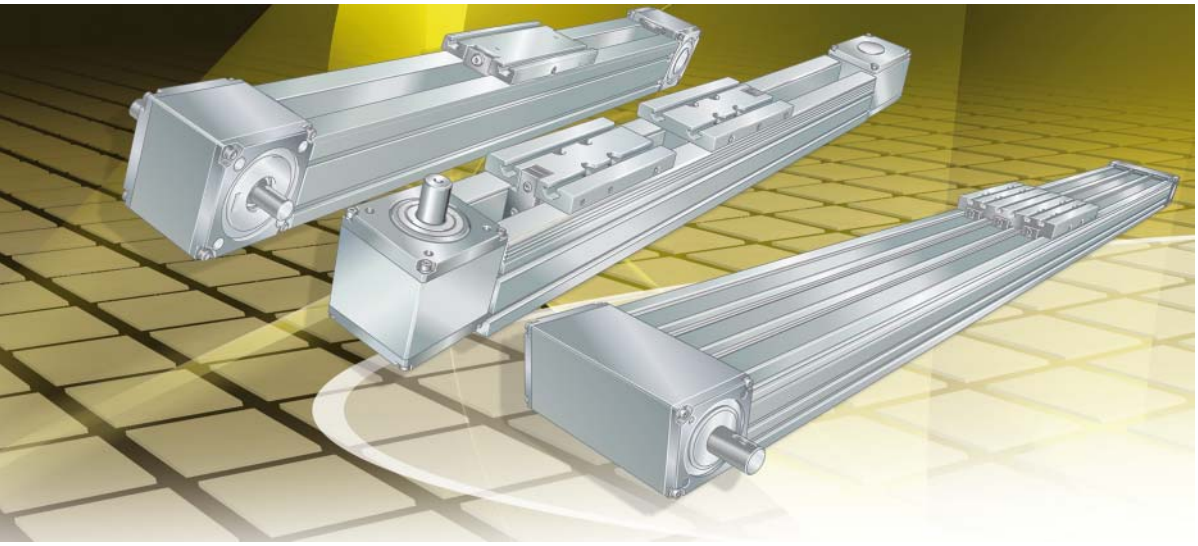

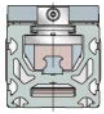

Actuators with monorail guidance system and toothed belt drive

Linear actuators
Tandem actuators
Clamping actuators

Actuators with monorail guidance system and toothed belt drive

Linear actuators

In the case of linear actuators MKUVE..-ZR and MKUSE..-ZR, the carriage units are guided on a linear recirculating ball bearing and guideway assembly. They fulfil moderate accuracy requirements and are suitable for moderate loads and moments.
Their area of application lies mainly in positioning and handling functions in automation technology and electronic component manufacture.

An overview of specific product characteristics for preselection of linear actuators is given on page 204.

Tandem actuators

In the case of tandem actuators MDKUVE..-3ZR and MDKUSE..-3ZR, the carriage unit is supported on two parallel linear recirculating ball bearing and guideway assemblies. Due to their design, these are suitable for high loads and moments. Based on their rigid design, the area of application of tandem actuators as components lies in peripheral systems for machine tools, machining systems, handling and assembly equipment as well as in joining systems.

An overview of specific product characteristics for preselection of tandem actuators is given on page 206.

Clamping actuator

In the case of the clamping actuator MKKUSE..-ZR, the carriage units are guided on a linear recirculating ball bearing and guideway assembly. They fulfil moderate accuracy requirements and are suitable for moderate loads and moments. Their area of application lies mainly in positioning and handling functions in automation technology and electronic component manufacture.

An overview of specific product characteristics for preselection of tandem actuators is given on page 206.

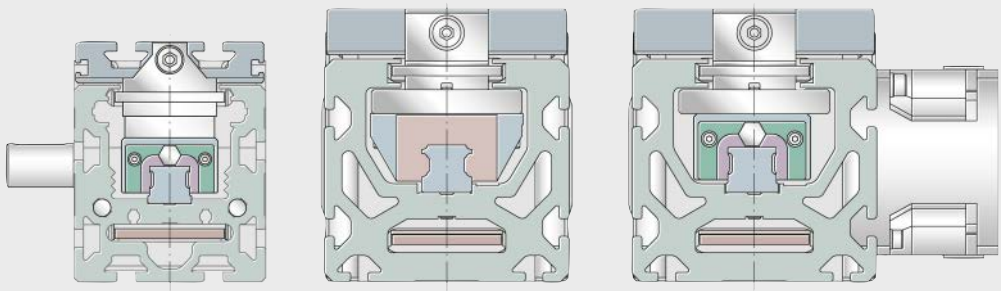

MKUVE..-ZR MKUSE..-ZR MKUVE..-ZR-GTRI

00019870

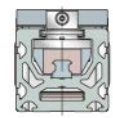

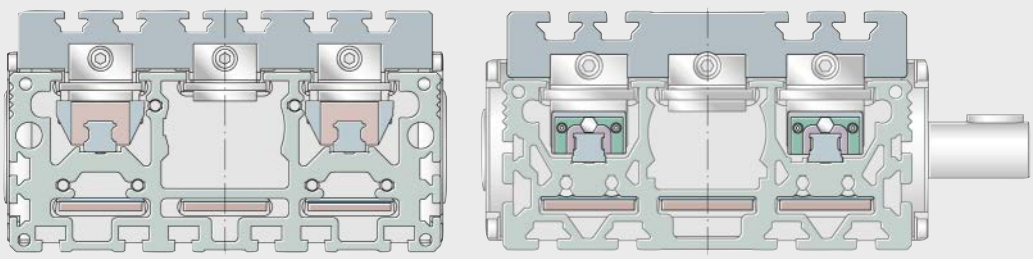

MDKUSE..-3ZR MDKUVE..-3ZR

00019871

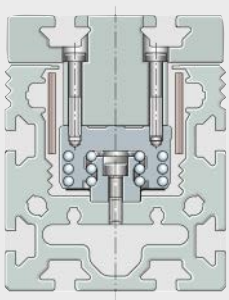

MKKUSE..-ZR

00082130

Actuators without planetary gearbox

Linear actuator	Characteristics				
	Mounting cross-section width×height	Length of carriage unit L	Maximum support rail length L_2		Load carrying capacity
			Single-piece	Multi-piece	
	mm	mm	mm	mm	
MKUVE15-140-ZR **MKUVE15-260-ZR** **MKUVE15-400-ZR**	65×85	140 260 400	6 000	–	From all directions
MKUVE20-250-C-ZR..-N **MKUVE20-500-C-ZR..-N**	88×110	250 500	8 000	24 000	From all directions
MKUVE25-250-ZR..(-N) **MKUVE25-500-ZR..(-N)** **MKUSE25-250-ZR..(-N)** **MKUSE25-500-ZR..(-N)**	112×125	250 500	8 000	24 000	From all directions
MKUVE20-250-C-LN-ZR..-N **MKUVE20-500-C-LN-ZR..-N**	88×110	250 500	8 000	24 000	From all directions
MKUVE25-250-LN-ZR..(-N) **MKUVE25-500-LN-ZR..(-N)**	112×125	250 500	8 000	24 000	From all directions
MKUVE25-250-HS-ZR..(-N) **MKUVE25-500-HS-ZR..(-N)**	112×125	250 500	6 000	–	From all directions

Actuators with planetary gearbox

Linear actuator	Characteristics			
	Mounting cross-section width×height	Length of carriage unit L	Maximum support rail length L_2 Single-piece	Load carrying capacity
	mm	mm	mm	
MKUVE25-250-ZR..-GTRI..(-N) **MKUVE25-500-ZR..-GTRI..(-N)** **MKUSE25-250-ZR..-GTRI..(-N)** **MKUSE25-500-ZR..-GTRI..(-N)**	112×125	250 500	8 000	From all directions

1) Basic load ratings C and C_0 in the compressive direction of the actuator guidance system.

Guidance system	Basic load ratings of carriage guidance system[1)]		Toothed belt drive		Permissible toothed belt operating force	Maximum travel velocity	Maximum acceleration	Repeat accuracy	Operating temperature	Mounting position
	dyn. C	stat. C_0	Toothed belt	Feed per revolution						
	N	N		mm	N	m/s	m/s^2	mm	°C	
KUVE, preloaded clearance-free	7 200 11 700	14 500 29 000	W-8-PU-32-STD	144	1 400	5	30	±0,1	0 to +80	Preferably horizontal, vertical also possible
KUVE, preloaded clearance-free	21 300	54 000	50-AT-10	200	1 880	5	30	±0,1	0 to +80	Preferably horizontal, vertical also possible
KUVE or KUSE, preloaded clearance-free	29 000 45 400	74 000 134 000	50-AT-10	250	1 880	5	30	±0,1	0 to +80	Preferably horizontal, vertical also possible
KUVE, preloaded clearance-free	19 100	46 000	50-BATK-10	200	1 880	5	30	±0,1	0 to +80	Preferably horizontal, vertical also possible
KUVE, preloaded clearance-free	26 300	64 000	50-BATK-10	250	1 880	5	30	±0,1	0 to +80	Preferably horizontal, vertical also possible
KUVE, preloaded clearance-free	29 000	74 000	50-BATK-10	250	1 880	10	50	±0,1	0 to +80	Preferably horizontal, vertical also possible

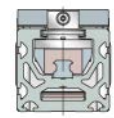

Guidance system	Basic load ratings of carriage guidance system[1)]		Toothed belt drive		Permissible toothed belt operating force	Maximum travel velocity	Maximum acceleration	Repeat accuracy	Operating temperature	Mounting position
	dyn. C	stat. C_0	Toothed belt	Feed per revolution						
	N	N		mm	N	m/s	m/s^2	mm	°C	
KUVE or KUSE, preloaded clearance-free	29 000 45 400	74 000 134 000	50-AT-10	250	1 880	4,16	30	±0,1	0 to +80	Both horizontal and vertical

Tandem actuators

Tandem actuator	Characteristics				
	Mounting cross-section width×height	Length of carriage unit L	Maximum support rail length L_2		Load carrying capacity
			Single-piece	Multi-piece	
	mm	mm	mm	mm	
MDKUVE15-240-3ZR..-N **MDKUVE15-500-3ZR..-N**	180×105	240 500	6 000	18 000	From all directions
MDKUVE25-365-3ZR..-N **MDKUVE25-500-3ZR..-N** **MDKUSE25-365-3ZR..-N** **MDKUSE25-500-3ZR..-N**	260×145	365 500	6 000	18 000	From all directions
MDKUVE35-500-3ZR..-N	415×200	500	6 000	18 000	From all directions

Clamping actuator

Clamping actuator	Characteristics			
	Mounting cross-section width×height	Length of carriage unit L	Maximum support rail length L_2 Single-piece	Load carrying capacity
	mm	mm	mm	
MKKUSE20-155-ZR..-N	88×110	155	4 000	From all directions

1) Basic load ratings C and C_0 in the compressive direction of the actuator guidance system.

Guidance system	Basic load ratings of carriage guidance system[1)]		Toothed belt drive		Permissible toothed belt operating force	Maximum travel velocity	Maximum acceleration	Repeat accuracy	Operating temperature	Mounting position
	dyn. C N	stat. C_0 N	Toothed belt	Feed per revolution mm	N	m/s	m/s^2	mm	°C	
KUVE, preloaded clearance-free	19 000	58 000	3×40-AT-105	160	4 500	5	30	±0,1	0 to +80	Both horizontal and vertical
KUVE or KUSE, preloaded clearance-free	47 200 73 900	148 000 268 000	3×50-AT-10	230	5 640	5	30	±0,1	0 to +80	Both horizontal and vertical
KUVE, preloaded clearance-free	100 000	148 000	3×100-ATK-10-L	370	15 000	5	30	±0,1	0 to +80	Both horizontal and vertical

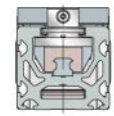

Guidance system	Basic load ratings of carriage guidance system[1)]		Toothed belt drive		Permissible toothed belt operating force	Maximum travel velocity	Maximum acceleration	Repeat accuracy	Operating temperature	Mounting position
	dyn. C N	stat. C_0 N	Toothed belt	Feed per revolution mm	N	m/s	m/s^2	mm	°C	
KUSE, preloaded clearance-free	22 000	52 000	32-AT-5	160	650	5	30	±0,1	0 to +80	Preferably horizontal, vertical also possible

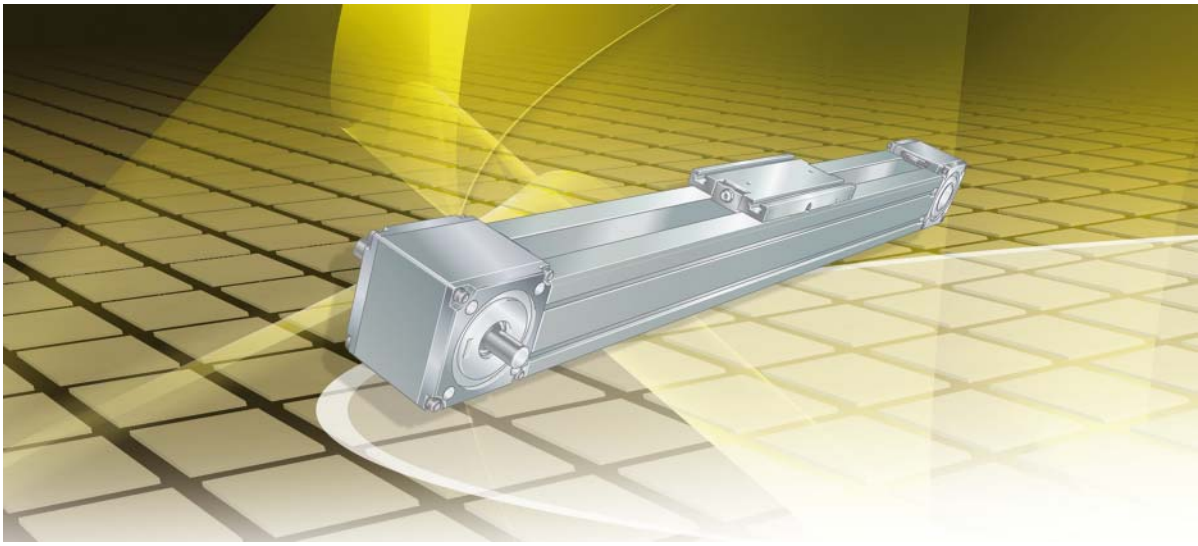

Actuators with toothed belt drive

Actuators with toothed belt drive

Basic design

One linear recirculating ball bearing and guideway assembly

Toothed belt drive

MKUVE15..-ZR

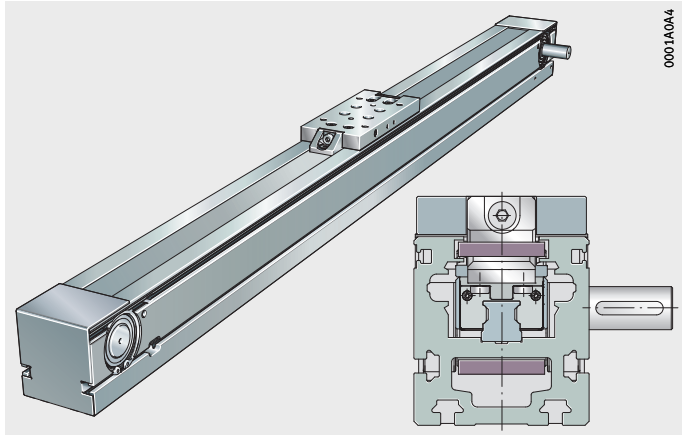

MKUVE20..-ZR, MKUVE25..-ZR, MKUSE25..-ZR

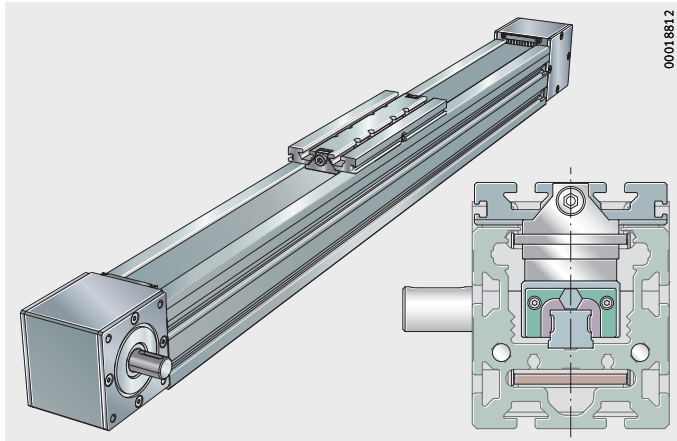

One linear recirculating ball bearing and guideway assembly

Toothed belt drive

Integrated planetary gearbox

MKUVE25..-ZR..-GTRI, MKUSE25..-ZR..-GTRI

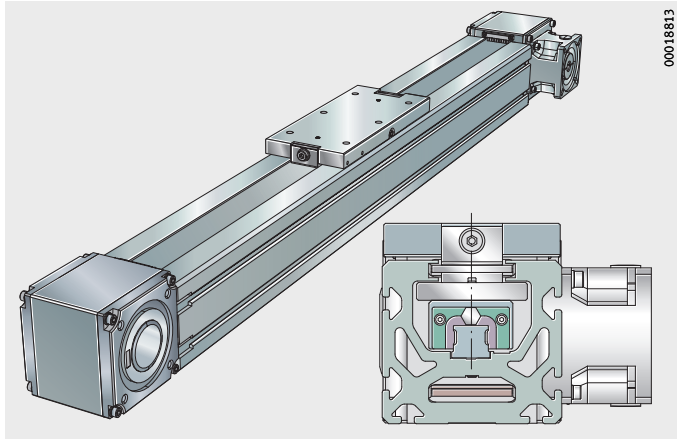

Actuators with toothed belt drive

Features

Linear actuators MKUVE..-ZR and MKUSE..-ZR comprise:

- a carriage available in various lengths
- a linear recirculating ball bearing and guideway assembly with
  - two carriages per carriage unit
  - one guideway
- a support rail in which the linear recirculating ball bearing and guideway assembly is mounted
- a toothed belt drive
- two return units.

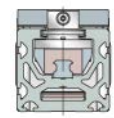

Actuators MKUVE..-ZR and MKUSE..-ZR are linear units for positioning, handling and machining tasks. They have a guidance system that is wear-resistant and clearance-free. The drive elements are mounted in a self-supporting support rail. The toothed belt is a cost-effective solution where drive concepts running at high velocity are required.

In the case of series MKUVE..-ZR, each carriage unit is guided by means of two four-row carriages of the linear recirculating ball bearing and guideway assembly KUVE arranged in series.

In the case of series MKUSE..-ZR, each carriage unit is guided by means of two six-row carriages of the linear recirculating ball bearing and guideway assembly KUSE arranged in series.

Accessories available for the actuators include fasteners and connectors, couplings and coupling housings and electric drive components such as motors, motor/gearbox units and controllers.

The advantage of the actuator MKUSE..-ZR compared with the actuator MKUVE..-ZR is a significantly longer operating life under the same load.

Linear actuator without planetary gearbox

These linear actuators with a four-row linear recirculating ball bearing and guideway assembly (MKUVE) or six-row linear recirculating ball bearing and guideway assembly (MKUSE) are available in various designs, see table. The possible designs and combinations vary according to the size and actuator type.

Available designs

Suffix	Description	Design
–	One driven carriage unit	Basic design
LN	Low Noise design	Standard
FA517	Multi-piece support rail	Standard
HS	High Speed design	Standard
RB	Corrosion-resistant design	Special design
W2	Second, driven carriage unit	Standard
N	Fixing slots in carriage unit	Standard

Linear actuator with integrated planetary gearbox

These linear actuators with a four-row linear recirculating ball bearing and guideway assembly (MKUVE) or six-row linear recirculating ball bearing and guideway assembly (MKUSE) are available in various designs, see table. The possible designs and combinations vary according to the size and actuator type.

Available designs

Suffix	Description	Design
–	One driven carriage unit	Basic design
W2	Second, driven carriage unit	Standard
N	Fixing slots in carriage unit	Standard

Special designs

Special designs are available by agreement. Examples of these are linear actuators:

- with more than two driven carriage units
- with two (or more) driven carriage units of different length
- with two (or more) driven carriage units of different design
- with a corrosion-resistant linear recirculating ball bearing and guideway assembly
- with reinforced or antistatic toothed belt or toothed belt of high temperature design
- without drive
- with T-strips inserted in the T-slots of the support rail
- with extended carriage units
- with compressed air connections in the support rail
- with a drive stud of special dimensions
- with special machining.

Carriage unit

The carriage unit comprises a saddle plate made from anodised aluminium profile and the two carriages of the linear recirculating ball bearing and guideway assembly.

The carriage unit contains integral tensioners on both sides for the toothed belt. Longer carriage units allow support of higher moment loads. Available carriage unit lengths, see table and *Figure 1*.

Lengths of carriages

Series	Carriage unit length mm	Suffix
MKUVE15..-ZR	140	140
	260	260
	400	400
MKUVE20..-C-ZR	250	250
	500	500
MKUVE25..-ZR	250	250
	500	500
MKUSE25..-ZR	250	250
	500	500

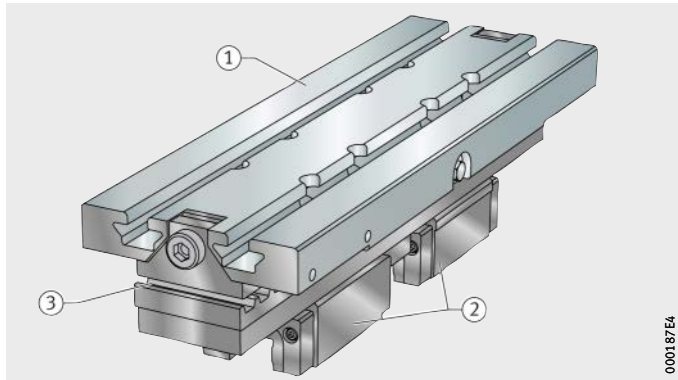

① Carriage unit saddle plate
② Carriage of linear recirculating ball bearing and guidway assembly
③ Toothed belt tensioner

Figure 1
Carriage unit

Longer carriage unit or second carriage unit

The carriage units of linear actuators are available in various lengths. Longer carriage units allow support of higher moment loads.

Optionally, a second driven carriage unit can be fitted.

Movable or stationary carriage unit

A movable carriage unit is mounted and used as follows, *Figure 2*:
- where a long stroke length or total length is required
- predominantly for horizontal mounting.

A stationary carriage unit is mounted and used as follows:
- where a short stroke length is required
- predominantly for horizontal mounting.

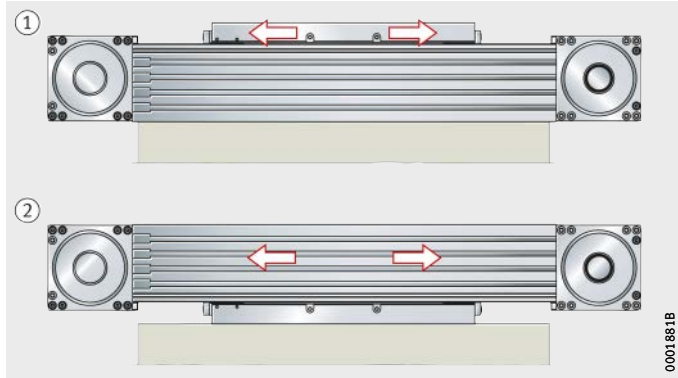

① Movable carriage unit
② Stationary carriage unit

Figure 2
Movable or stationary carriage unit

Lubrication

The raceways of the guideway are relubricated by means of lubrication nipples located on the sides of the carriage unit. The carriages have an initial greasing.

Sealing

The carriages are sealed.

Location

The carriage units have two T-slots. In the case of size 25, the carriage units are also available with threaded holes.

Support rail unit

The support rail unit is a composite unit. It comprises a support rail made from anodised aluminium and the guideway of a four-row linear recirculating ball bearing and guideway assembly KUVE (actuator series MKUVE..-ZR) or of a six-row linear recirculating ball bearing and guideway assembly KUSE (actuator series MKUSE..-ZR). The linear recirculating ball bearing and guideway assemblies are preloaded clearance-free and run without stick-slip.

Since the support rail has very high bending rigidity, it can be used to span large gaps.

Support rail length and segments

The maximum length of single-piece support rails for MKUVE15..-ZR is 6 000 mm, while in the case of MKUVE20..-ZR and MKUVE25..-ZR it is 8 000 mm. The minimum length of a segment of a multi-piece support rail is 500 mm. Longer lengths can be achieved by combining several support rail segments. The support rail segments are connected at their butt joints by means of an aluminium plate screw mounted to each side of the support rail and secured by dowel pins.

One return unit and the carriage unit are premounted on the first support rail segment. The other support rail segments with two aluminium plates screwed to each side of the support rail and secured by dowel pins, the second return unit and the toothed belt are supplied as individual components. These are fitted on site.

Actuators of the High Speed design and actuators with an integrated planetary gearbox are not available with a multi-piece support rail.

Return unit

The return units comprise a housing made from anodised aluminium profile, two covers and a shaft unit, *Figure 3*. The shaft is supported on both sides by ball bearings lubricated for life. The toothed belt is wrapped by means of a gear mounted on the shaft. The return zone is protected against contamination by means of wiper brushes.

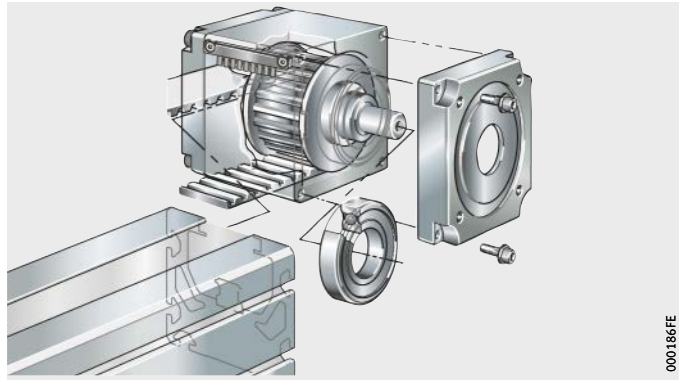

Figure 3
Return unit

Toothed belt

A reinforced toothed belt is fitted that allows the transmission of high tensile forces with a long rating life. Tensioning of the belt is carried out by means of the tensioning unit on the carriage unit.

Drive

The actuators are available without a drive shaft as well as with a drive shaft on the left side, right side or passing through the unit, see table.

Possible combinations and drive variants, see also *Figure 4*.

Suffixes

Drive variants	Suffix
Drive shaft on left side	AL
Drive shaft on right side	AR
No drive shaft	OZ
Drive shaft on both sides (right and left)	RL

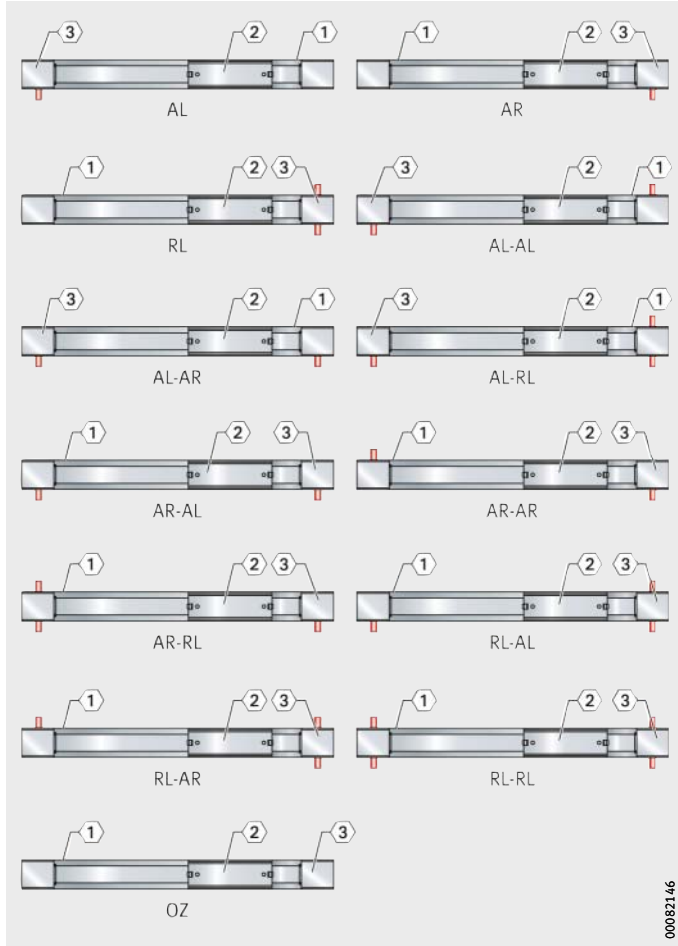

(1) Filling slot for T-nuts and T-bolts on single-piece support rails

(2) Carriage unit, the adjustable belt tensioner points towards the drive side

(3) Drive and marking side

Figure 4
Drive variants – linear actuators
MKUVE..-ZR
MKUSE..-ZR

Drive elements

For actuators, Schaeffler also supplies components such as couplings, coupling housings and planetary gearboxes as well as servo motors and servo controllers, *Figure 5*.

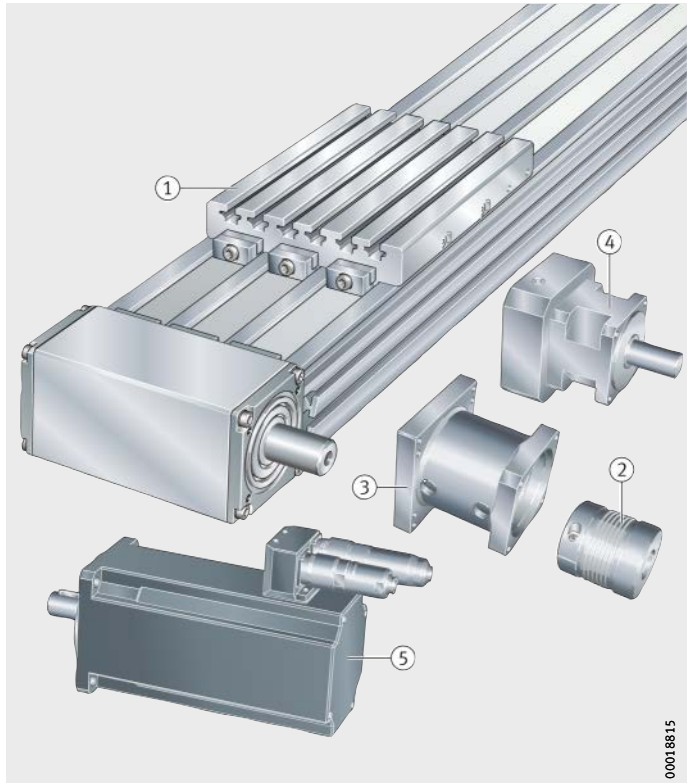

Example:
MDKUSE25..-3ZR

① Actuator with monorail guidance system and toothed belt drive (tandem actuator given here as an example)
② Coupling KUP
③ Coupling housing KGEH
④ Planetary gearbox GETR
⑤ Servo motor MOT

Figure 5
Linear actuator with drive elements

Proven drive combinations

The combination of the necessary drive components for vertical and horizontal applications as a function of the mass to be moved, the acceleration and the travel velocity of carriages is shown on page 681.

The bearing load in the actuators must be checked; it is not taken into consideration in dimensioning of the motor.
For vertical mounting, motors with a holding brake must be used.

If different loading and kinematic criteria apply, see pages starting page 684, the least favourable operating conditions should be used for calculation of the drive motor and design of the gearbox, coupling and servo controller.

Mechanical accessories

A large number of accessories are available for linear actuators with monorail guidance system and toothed belt drive.
The allocation of accessories, see table, is valid if the data match the Technical principles, page 13, and the Design and safety guidelines, page 220.

Allocation

Linear actuator / size	MKUVE..-ZR, MKUVE..-ZR-N	15	20	25
	MKUSE..-ZR, MKUSE..-ZR-N	–	–	25
Fixing brackets, see page 811				
WKL-48×48×35		–	–	①
WKL-65×65×30-N		①	①	①
WKL-65×65×35		–	–	①
WKL-65×65×35-N		–	①	①
WKL-90×90×35-N		–	①	①
WKL-98×98×35		–	–	①
Clamping lugs, see page 829				
SPPR-24×20		①	–	–
SPPR-23×30		–	①	–
SPPR-28×30		–	–	①
T-nuts, see page 835				
MU-DIN 508 M4×5		①	–	–
MU-M3×5 (similar to DIN 508)		①	–	–
MU-DIN 508 M6×8		–	①	①
MU-M4×8 (similar to DIN 508)		–	①	①
T-nuts made from corrosion-resistant steel, see page 835				
MU-DIN 508 M4×5-RB		①	–	–
MU-DIN 508 M6×8-RB		–	①	①
T-bolts, see page 835				
SHR-DIN 787 M4×5×25		①	–	–
SHR DIN 787-M8×8×32		–	①	①
Rotatable T-nuts, see page 836				
MU-M3×5-RHOMBUS		①	–	–
MU-M4×8-RHOMBUS		–	①	①
MU-M6×8-RHOMBUS		–	①	①
Positionable T-nuts, see page 836				
MU-M4×5-POS		①	–	–
MU-M5×5-POS		①	–	–
MU-M4×8-POS		–	①	①
MU-M5×8-POS		–	①	①
MU-M6×8-POS		–	①	①
MU-M8×8-POS		–	①	①

① Suitable.

Allocation
(continued)

Linear actuator / size	MKUVE..-ZR, MKUVE..-ZR-N	15	20	25
	MKUSE..-ZR, MKUSE..-ZR-N	–	–	25
Hexagon nuts, see page 837				
MU-ISO 4032 M5		①	–	–
MU-ISO 4032 M8		–	①	①
T-strips, see page 837				
LEIS-M4/5-T-NUT-SB-ST		①	–	–
LEIS-M4/5-T-NUT-HR-ALU		②	–	–
LEIS-M4/5-T-NUT-ST		②	–	–
LEIS-M6/8-T-NUT-ST		–	②	②
LEIS-M6/8-T-NUT-SB-ST		–	①	①
LEIS-M8/8-T-NUT-SB-ST		–	①	①
LEIS-M6/8-T-NUT-HR-ST		–	②	②
LEIS-M6/8-T-NUT-HR-ALU		–	②	②
Connector sets (parallel connectors), see page 838				
VBS-PVB8		–	①	①
VBS-PVB8/10		–	①	①
Slot closing strips, see page 838				
NAD-5×5,7		①	–	–
NAD-8×4,5		–	①	①
NAD-8×11,5		–	①	①

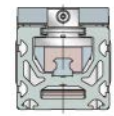

① Suitable.
② Suitable and T-strips must already have been inserted at the time of despatch.

Design and safety guidelines

Load carrying capacity and load safety factor

The load carrying capacities and load safety factors to be observed differ as a function of the mounting position, see section Technical principles, page 12 and Product preselection matrix, page 204.

Deflection

The deflection of linear actuators is essentially dependent on the support spacing, the rigidity of the support rail, the adjacent construction and the bearing arrangement. As the rigidity of these components increases, the deflection of the actuators is reduced.

Diagrams

The diagram values are determined for a bearing arrangement or clamping which is in theory infinitely rigid and are subdivided into locating/non-locating and locating/locating bearing arrangements, starting *Figure 6*, page 221.

The deflection of the support rail is valid under the following conditions:

- support rail unit comprising carrier profile and guideway
- support spacings up to 8 000 mm
- introduction of the load at the centre of the carriage unit if this is at the centre point between the bearing points.

The diagrams represent guide values only for the deflection of the support rail, starting *Figure 10*, page 222. The effect of deflection on the rating life of the guidance system is not taken into consideration.

It is not possible to provide deflection diagrams for actuators with two carriage units since there will be different spacings between the carriage units. In such cases, please consult the Schaeffler engineering service.

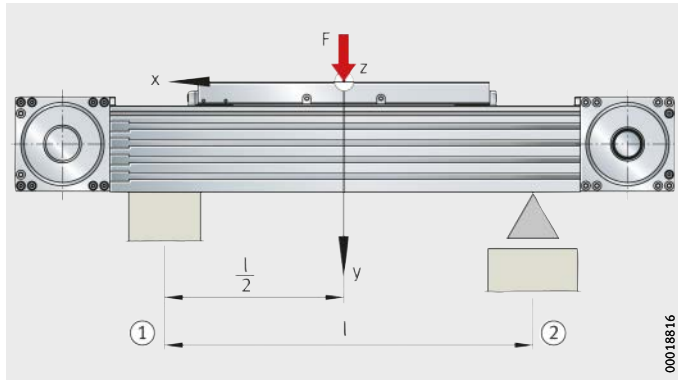

① Locating bearing arrangement
② Non-locating bearing arrangement

Figure 6
Deflection about the z axis

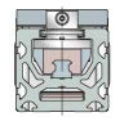

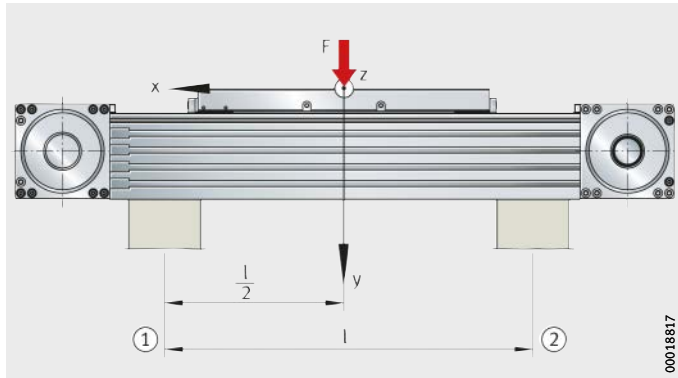

① Locating bearing arrangement
② Locating bearing arrangement

Figure 7
Deflection about the z axis

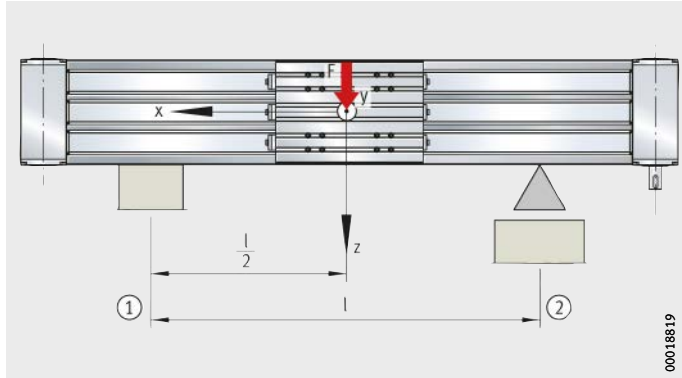

① Locating bearing arrangement
② Non-locating bearing arrangement

Figure 8
Deflection about the y axis

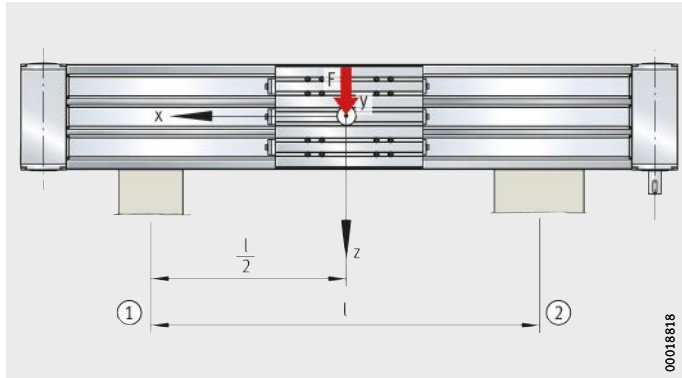

① Locating bearing arrangement
② Locating bearing arrangement

Figure 9
Deflection about the y axis

MKUVE15..-ZR

Locating/non-locating bearing arrangement
Δ_{vy} = deflection
l = support spacing

Figure 10
Deflection about the z axis

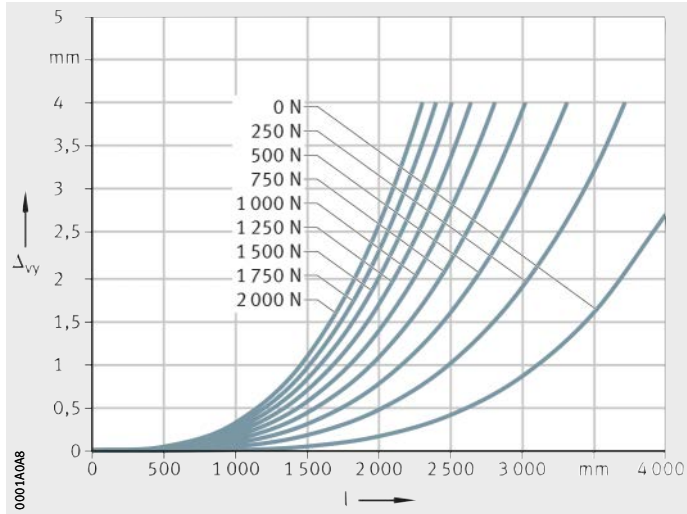

MKUVE15..-ZR

Locating/locating bearing arrangement
Δ_{vy} = deflection
l = support spacing

Figure 11
Deflection about the z axis

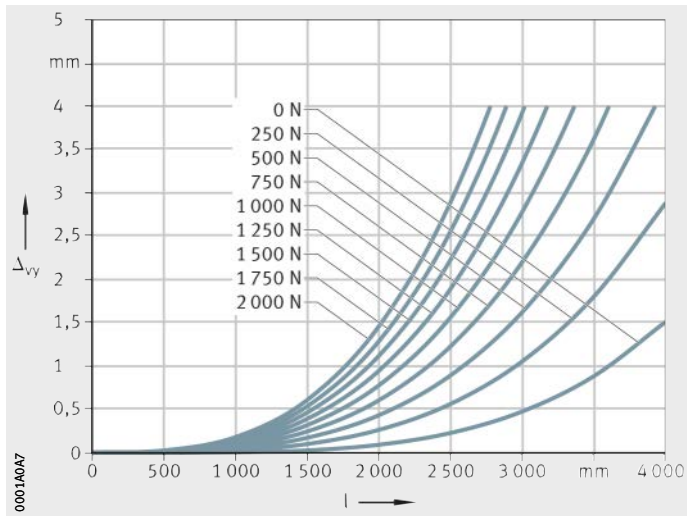

MKUVE15..-ZR

Locating/non-locating bearing arrangement
Δ_{vz} = deflection
l = support spacing

Figure 12
Deflection about the y axis

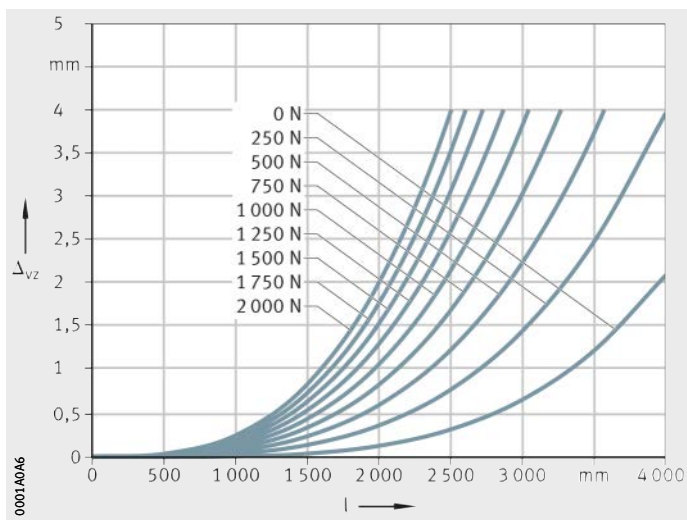

MKUVE15..-ZR

Locating/locating bearing arrangement
Δ_{vz} = deflection
l = support spacing

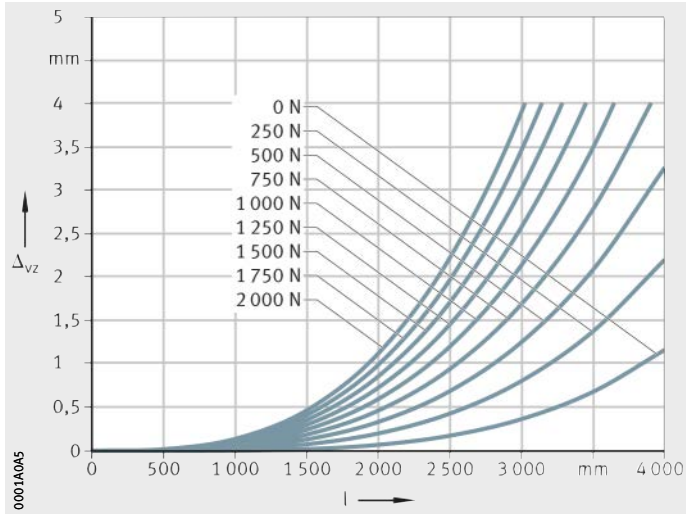

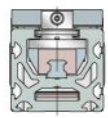

Figure 13
Deflection about the y axis

MKUVE20..-C-ZR

Locating/non-locating bearing arrangement
Δ_{vy} = deflection
l = support spacing

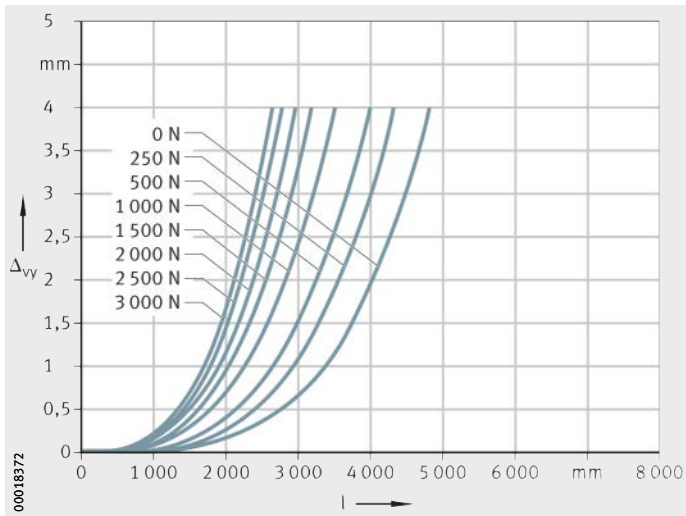

Figure 14
Deflection about the z axis

MKUVE20..-C-ZR

Locating/locating bearing arrangement
Δ_{vy} = deflection
l = support spacing

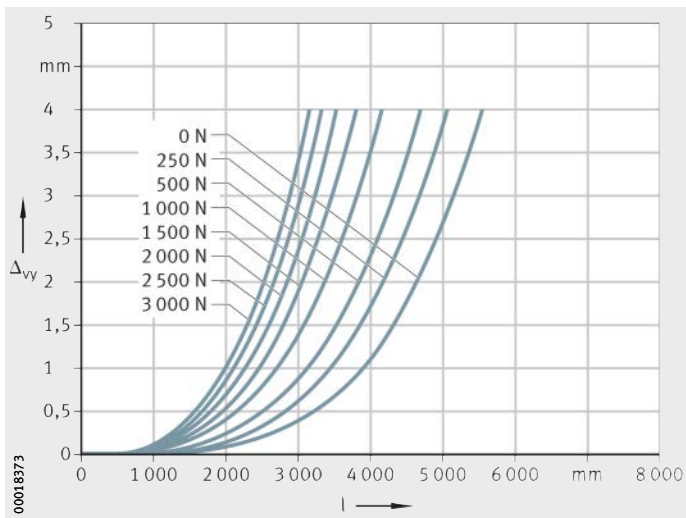

Figure 15
Deflection about the z axis

MKUVE20..-C-ZR

Locating/non-locating bearing arrangement
Δ_{vz} = deflection
l = support spacing

Figure 16
Deflection about the y axis

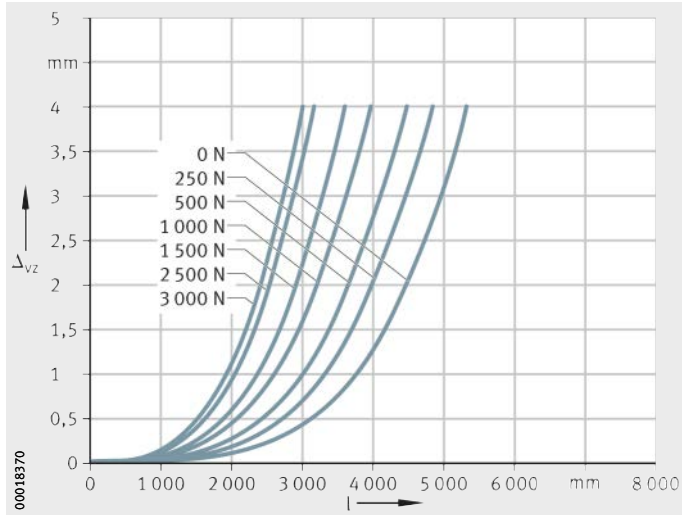

MKUVE20..-C-ZR

Locating/locating bearing arrangement
Δ_{vz} = deflection
l = support spacing

Figure 17
Deflection about the y axis

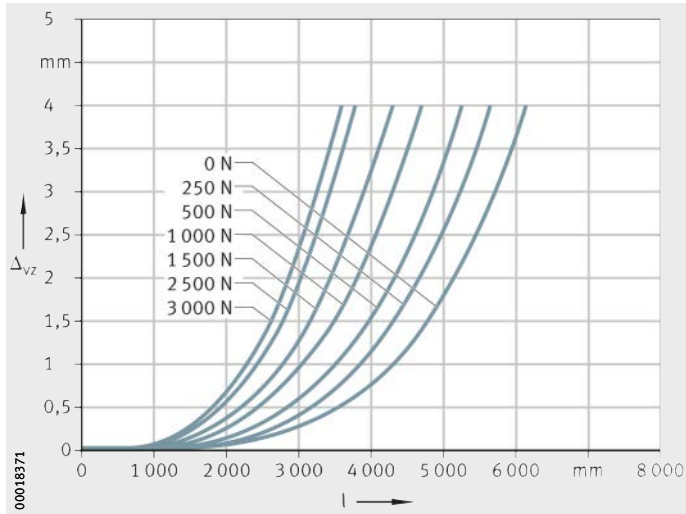

MKUVE25..-ZR
MKUSE25..-ZR

Locating/non-locating bearing arrangement
Δ_{vy} = deflection
l = support spacing

Figure 18
Deflection about the z axis

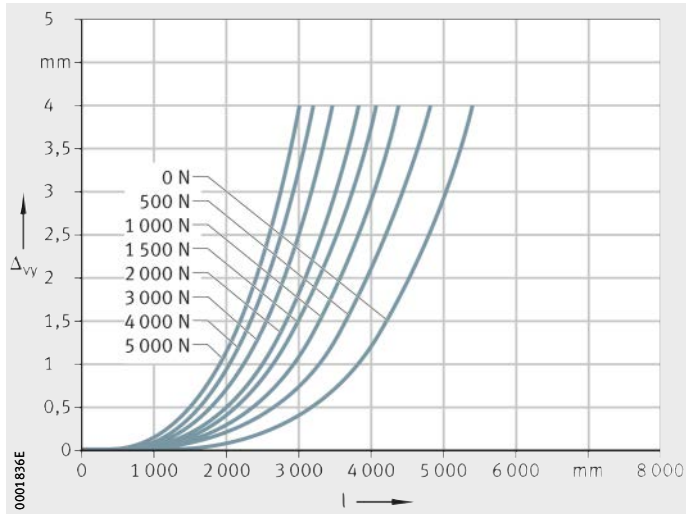

MKUVE25..-ZR
MKUSE25..-ZR

Locating/locating bearing arrangement
Δ_{vy} = deflection
l = support spacing

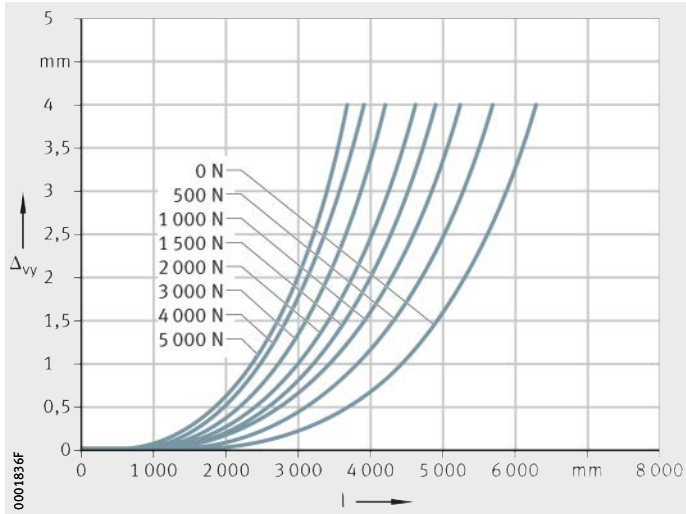

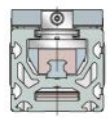

Figure 19
Deflection about the z axis

MKUVE25..-ZR
MKUSE25..-ZR

Locating/non-locating bearing arrangement
Δ_{vz} = deflection
l = support spacing

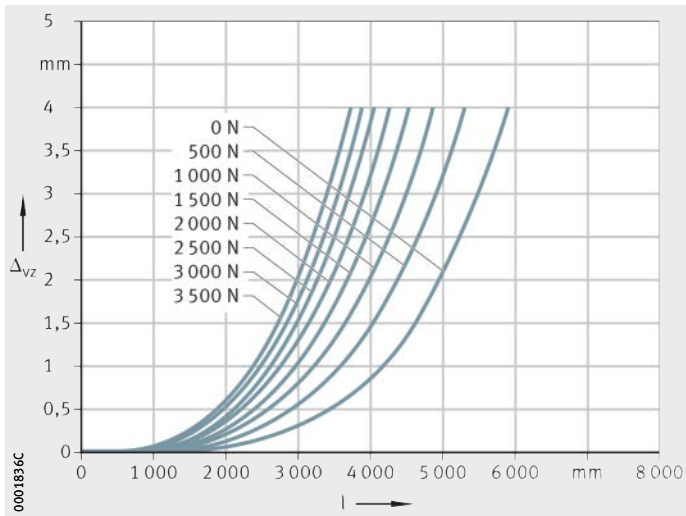

Figure 20
Deflection about the y axis

MKUVE25..-ZR
MKUSE25..-ZR

Locating/locating bearing arrangement
Δ_{vz} = deflection
l = support spacing

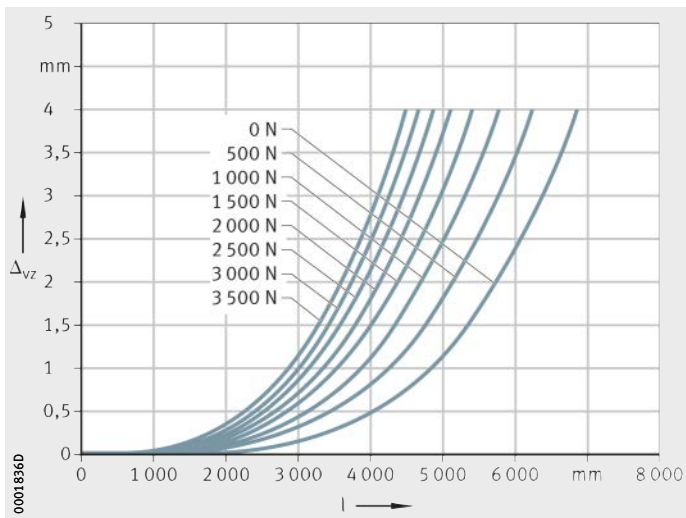

Figure 21
Deflection about the y axis

Idling drive torque

The idling drive torque M_0 of linear actuators is calculated for a constant velocity and for a horizontal (M_{0h}) or vertical (M_{0v}) mounting position, starting *Figure 22*. The idling drive torque increases with increasing travel velocity. The data in the diagrams are maximum values.

MKUVE15..-ZR

v = travel velocity of carriage unit
M_{0h} = idling drive torque

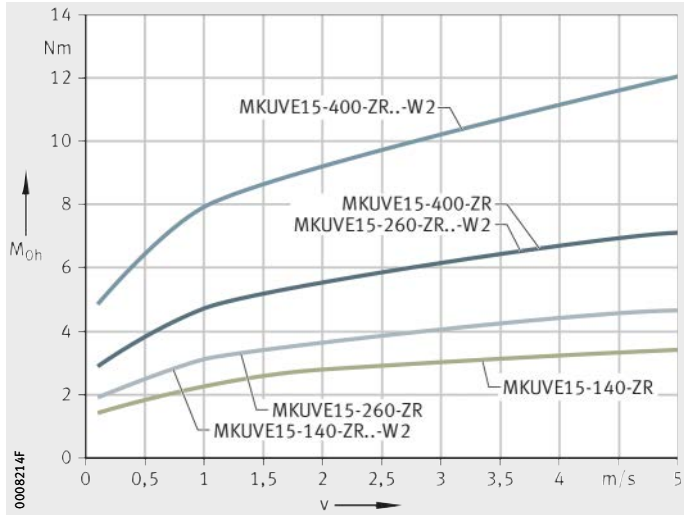

Figure 22
Idling drive torque
Horizontal mounting position

MKUVE15..-ZR

v = travel velocity of carriage unit
M_{0v} = idling drive torque

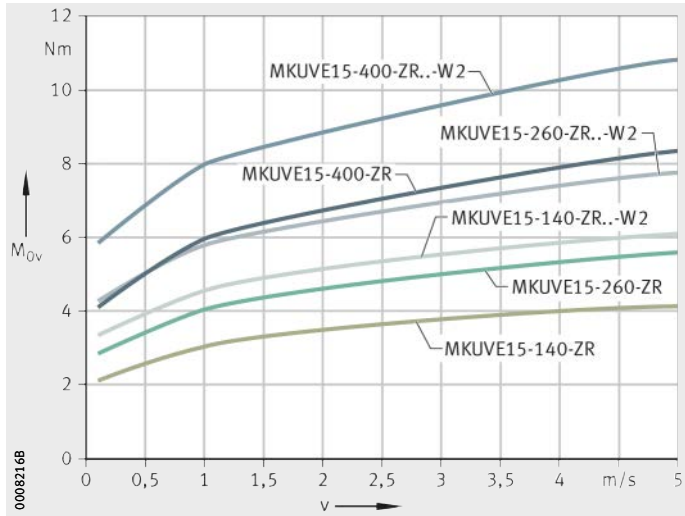

Figure 23
Idling drive torque
Vertical mounting position

MKUVE20..-C-ZR
MKUVE20..-C-ZR..-W2

v = travel velocity of carriage unit
M_{0h} = idling drive torque

Figure 24
Idling drive torque
Horizontal mounting position

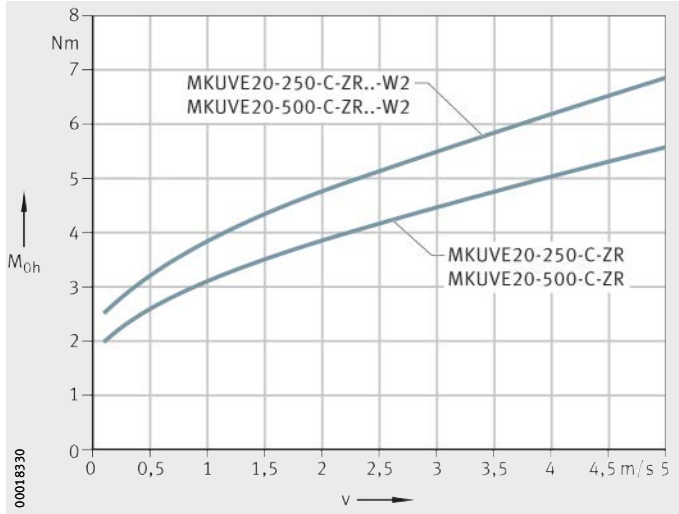

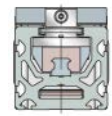

MKUVE20..-C-ZR
MKUVE20..-C-ZR..-W2

v = travel velocity of carriage unit
M_{0v} = idling drive torque

Figure 25
Idling drive torque
Vertical mounting position

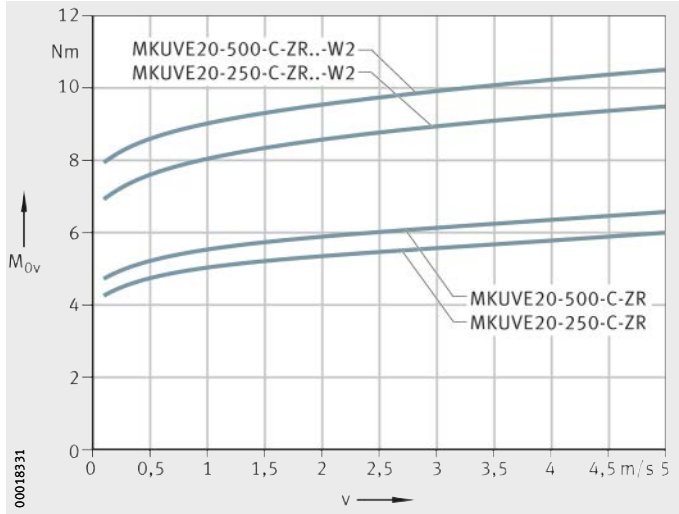

MKUVE20..-C-LN-ZR
MKUVE20..-C-LN-ZR..-W2

v = travel velocity of carriage unit
M_{0h} = idling drive torque

Figure 26
Idling drive torque
Horizontal mounting position

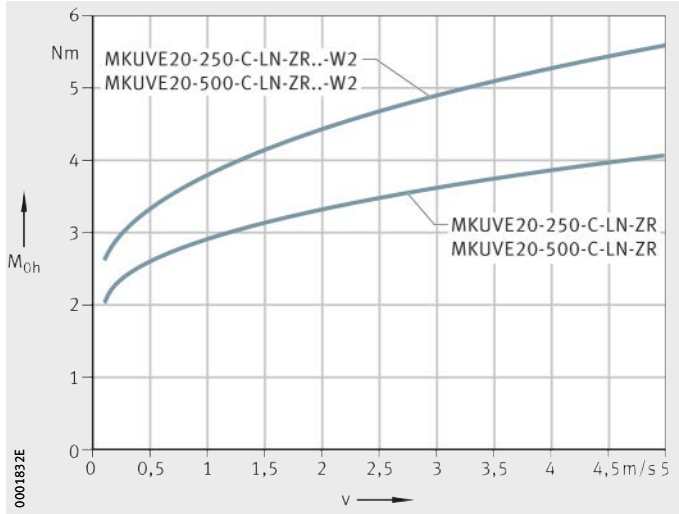

MKUVE20..-C-LN-ZR
MKUVE20..-C-LN-ZR..-W2

v = travel velocity of carriage unit
M_{0v} = idling drive torque

Figure 27
Idling drive torque
Vertical mounting position

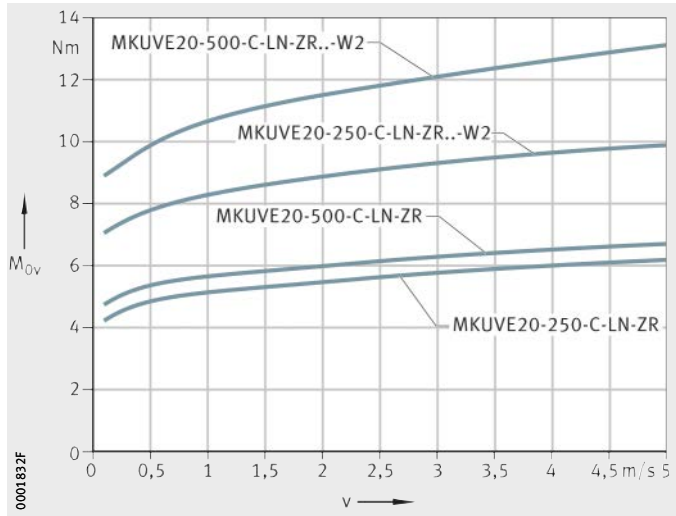

MKUVE25..-ZR
MKUVE25..-ZR..-W2

v = travel velocity of carriage unit
M_{0h} = idling drive torque

Figure 28
Idling drive torque
Horizontal mounting position

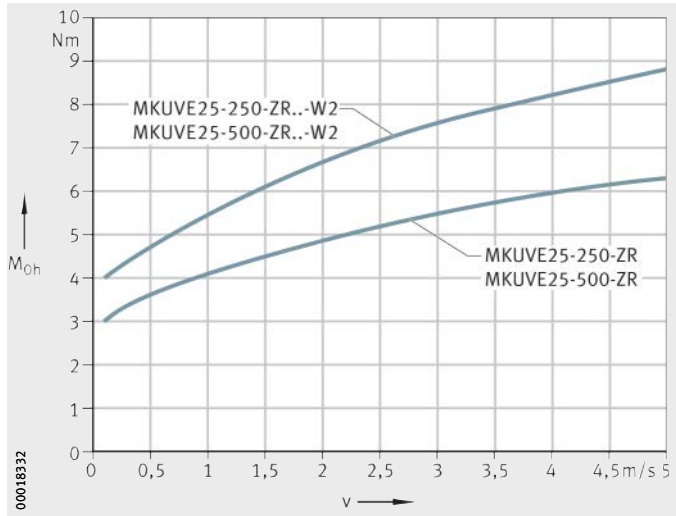

MKUVE25..-ZR
MKUVE25..-ZR..-W2

v = travel velocity of carriage unit
M_{0v} = idling drive torque

Figure 29
Idling drive torque
Vertical mounting position

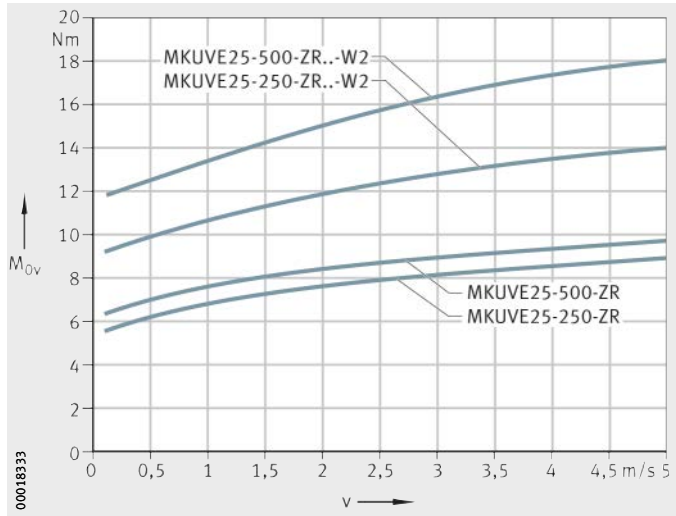

MKUVE25..-LN-ZR
MKUVE25..-LN-ZR..-W2

v = travel velocity of carriage unit
M_{0h} = idling drive torque

Figure 30
Idling drive torque
Horizontal mounting position

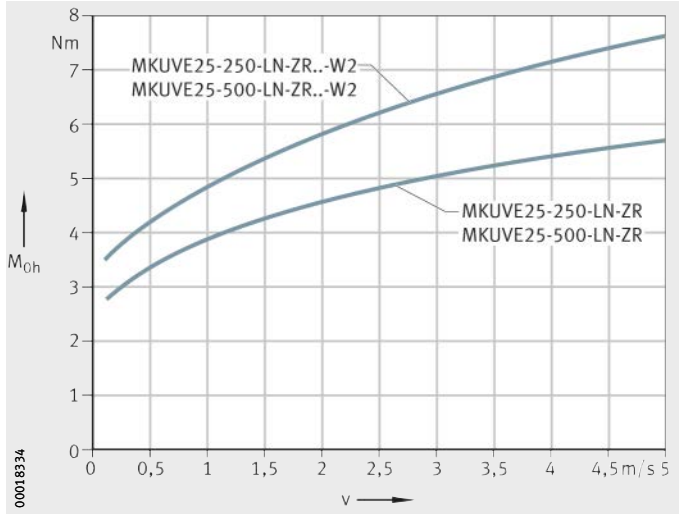

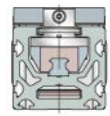

MKUVE25..-LN-ZR
MKUVE25..-LN-ZR..-W2

v = travel velocity of carriage unit
M_{0v} = idling drive torque

Figure 31
Idling drive torque
Vertical mounting position

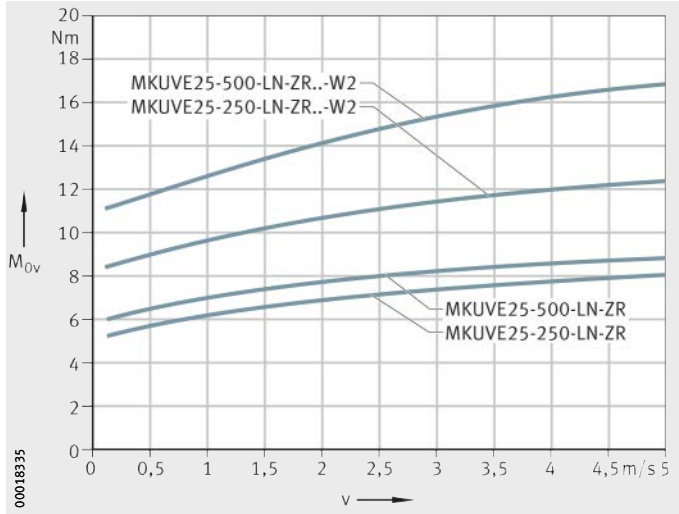

MKUSE25..-ZR
MKUSE25..-ZR..-W2

v = travel velocity of carriage unit
M_{0h} = idling drive torque

Figure 32
Idling drive torque
Horizontal mounting position

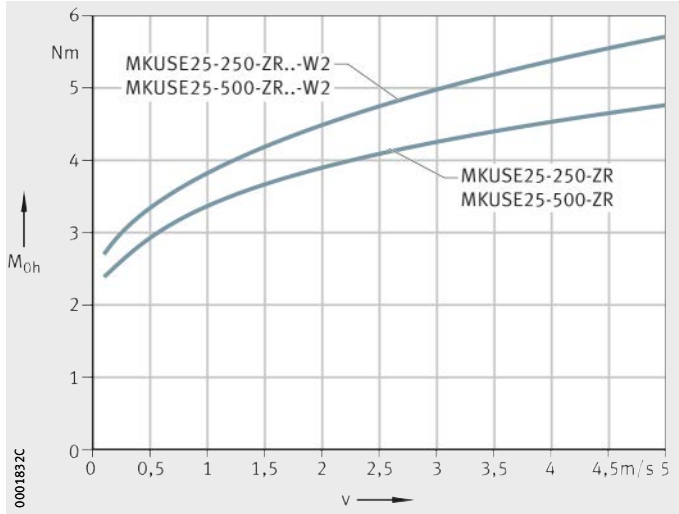

MKUSE25..-ZR
MKUSE25..-ZR..-W2

v = travel velocity of carriage unit
M_{0v} = idling drive torque

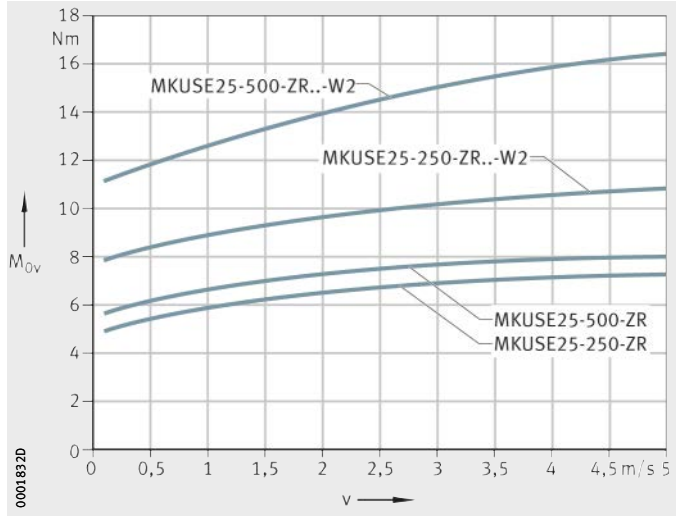

Figure 33
Idling drive torque
Vertical mounting position

Length calculation of actuators

The length calculation of actuators is based on the required effective stroke length N_H. The effective stroke length N_H must be increased by the addition of safety spacing values on both sides of the travel distance.

The total length L_{tot} of the actuator is determined from the support rail length L_2 and the lengths of the return units L_4. If two carriage units are present, both carriage unit lengths L_1 and the spacing L_{x1} must be taken into consideration.

Parameters for length calculation

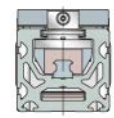

G_H mm
Total stroke length

N_H mm
Effective stroke length

S mm
Safety spacing, for minimum values see table, page 234

L mm
Length of carriage plate

L_1 mm
Total length of carriage unit

L_2 mm
Length of support rail

L_4 mm
Length of return unit

L_6 mm
Length of wiper brushes

L_{21} mm
Length of cover plate

L_{tot} mm
Total length of actuator

L_{x1} mm
Spacing between two carriage units.

Total stroke length G_H

The total stroke length G_H is determined from the required effective stroke length and the safety spacings, which must be at least 85 mm.

$$G_H = N_H + 2 \cdot S$$

Single-piece and multi-piece support rails

The maximum length of single-piece support rails, the maximum length of a support rail and the safety spacings S are dependent on size, see table.

Safety spacing S, maximum single-piece support rail length L_2

Actuator	Maximum support rail length L_2 (FA517) mm	Maximum length of single-piece support rails L_2 mm	Support rail segment length	Safety spacing S mm
MKUVE15..-ZR	6 000	6 000	1	80
MKUVE20..-C-ZR	24 000	8 000	3	85
MKUVE25..-ZR	24 000	8 000	3	
MKUSE25..-ZR	24 000	8 000	3	
MKUVE25..-HS-ZR	–	6 000	1	
MKUVE25..-ZR-GTRI	–	8 000	1	
MKUSE25..-ZR-GTRI	–	8 000	1	

Spacing L_{x1} between carriage units

The minimum spacing L_{x1} between two carriage units is 50 mm.

Total length L_{tot} and support rail length L_2

The following equations are designed for one and two carriage units. The parameters and their position can be found in *Figure 34* and *Figure 35* as well as in the table, page 234. If more than two carriage units are present, please consult us.

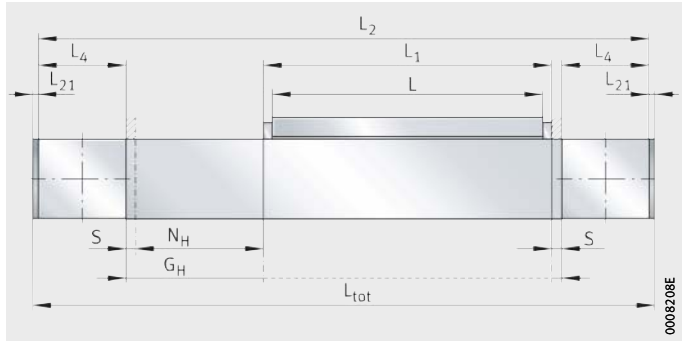

Figure 34
Length parameters for one carriage unit

One carriage unit
Size: MKUVE15

$$L_2 = G_H + L_1 + 2 \cdot L_4$$

Total length
Size: MKUVE15

$$L_{tot} = L_2 + 2 \cdot L_{21}$$

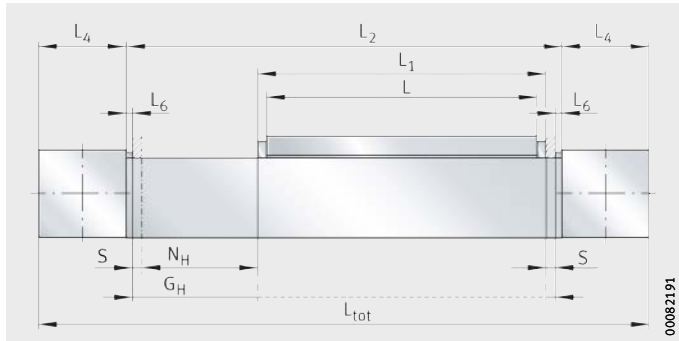

Figure 35
Length parameters for one carriage unit

One carriage unit
Sizes: MKUVE20, MKUVE25, MKUSE20

$$L_2 = G_H + L_1 + 2 \cdot L_6$$

Total length
Sizes: MKUVE20, MKUVE25, MKUSE20

$$L_{tot} = L_2 + 2 \cdot L_4$$

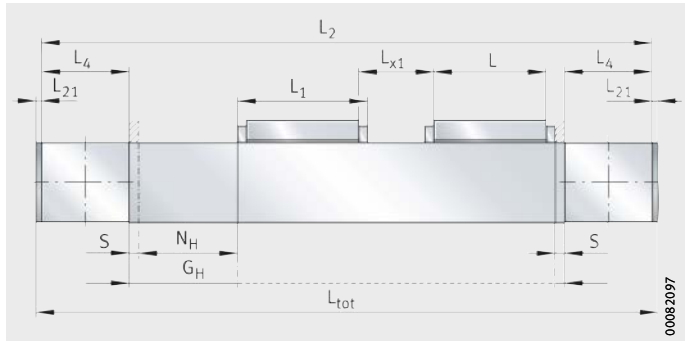

Figure 36
Length parameters
for two carriage units

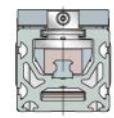

One carriage unit
Size: MKUVE15

$$L_2 = G_H + L + L_1 + L_{x1} + 2 \cdot L_4$$

Total length
Size: MKUVE15

$$L_{tot} = L_2 + 2 \cdot L_{21}$$

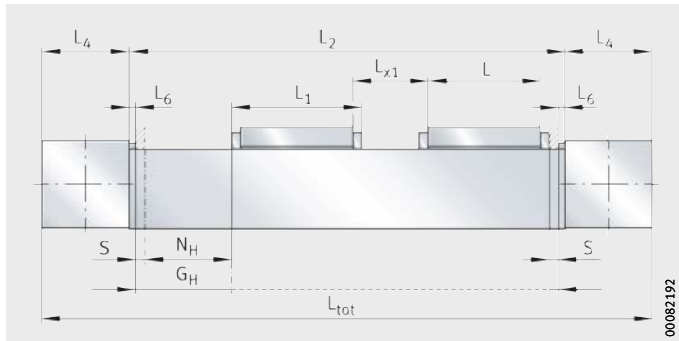

Figure 37
Length parameters
for two carriage units

Two carriage units
Sizes: MKUVE20, MKUVE25, MKUSE20

$$L_2 = G_H + L + L_1 + L_{x1} + 2 \cdot L_6$$

Total length
Sizes: MKUVE20, MKUVE25, MKUSE20

$$L_{tot} = L_2 + 2 \cdot L_4$$

Length parameters

Designation	L mm	L_1 mm	L_4 mm	L_6 mm	L_{21} mm	S mm
MKUVE15-140-ZR	140	178	69	–	1	85
MKUVE15-260-ZR	260	298		–		
MKUVE15-400-ZR	400	438		–		
MKUVE20-250-C..-ZR..-N	250	260	97	6	–	85
MKUVE20-500-C..-ZR..-N	500	510				
MKUVE25-250-ZR..-N MKUVE25-250-ZR..-GTRI-N	250	263	115,5	6	–	85
MKUVE25-500-ZR-N MKUVE25-500-ZR..GTRI-N	500	513				
MKUSE25-250-ZR..-N MKUSE25-250-ZR..-GTRI	250	263	115,5	6	–	85
MKUSE25-500-ZR..-N MKUSE25-500-ZR..-GTRI	500	513				

Mass calculation

The total mass of an actuator is calculated from the mass of the actuator without a carriage unit, the carriage unit and the special design: multi-piece support rail (FA517), integrated gearbox (GTRI) and second carriage unit (W2), *Figure 38*. Insert the values from the table in the following equation. The values m_{LAW} and m_{BOL} are mandatory.

$$m_{tot} = m_{LAW} + m_{BOL} + m_1 + m_2 + m_3$$

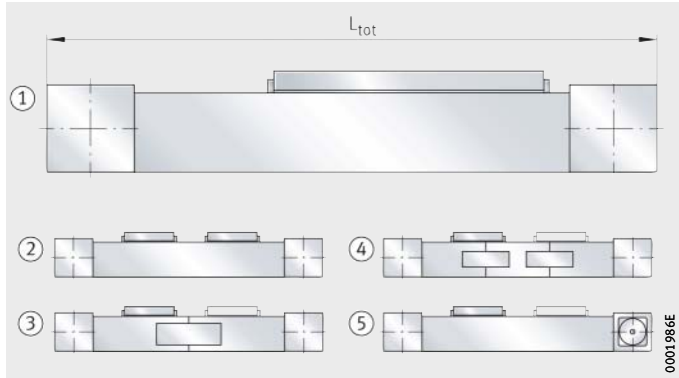

① Basic design
② Second carriage unit (W2)
③ Two-piece support rail (FA517.1)
④ Three-piece support rail (FA517.2)
⑤ Integrated gearboxes (GTRI/4, GTRI/8)

Figure 38
Basic and additional designs

Values for mass calculation

Designation	Mass	
	Carriage unit m_{LAW} ≈kg	Actuator without carriage unit m_{BOL} ≈kg
MKUVE15-140-ZR	0,75	$(L_{tot} \cdot 0{,}0072) + 1{,}65$
MKUVE15-260-ZR	1,4	$(L_{tot} \cdot 0{,}0072) + 1{,}4$
MKUVE15-400-ZR..-N	3,2	$(L_{tot} \cdot 0{,}0072) + 1{,}4$
MKUVE20-250-C..-ZR..-N	2,5	$(L_{tot} - 194) \cdot 0{,}0112 + 4{,}46$
MKUVE20-500-C..-ZR..-N	4,07	
MKUVE25-250-ZR..-N	4,11	$(L_{tot} - 231) \cdot 0{,}017 + 7{,}94$
MKUVE25-500-ZR..-N	6,37	
MKUVE25-250-ZR	4,31	
MKUVE25-500-ZR	6,77	
MKUSE25-250-ZR..-N	3,95	
MKUSE25-500-ZR..-N	6,21	
MKUSE25-250-ZR	4,15	
MKUSE25-500-ZR	6,61	

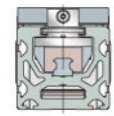

Values for mass calculation (continued)

Designation	Mass Design				
	m_1		m_2		m_3
	FA517.1 ≈kg	FA517.2 ≈kg	GTRI/4 ≈kg	GTRI/8 ≈kg	W2 ≈kg
MKUVE15-140-ZR	–	–	–	–	0,75
MKUVE15-260-ZR					1,4
MKUVE15-400-ZR					3,2
MKUVE20-250-C..-ZR..-N	2,3	4,5	–	–	2,5
MKUVE20-500-C..-ZR..-N					4,07
MKUVE25-250-ZR	3,22	6,44	0,85	0,55	4,31
MKUVE25-500-ZR					6,77
MKUVE25-250-ZR..-N					4,11
MKUVE25-500-ZR..-N					6,37
MKUSE25-250-ZR	3,22	6,44	0,85	0,55	4,15
MKUSE25-500-ZR					6,61
MKUSE25-250-ZR..-N					3,95
MKUSE25-500-ZR..-N					6,21

Lubrication

The guidance systems in linear actuators are initially greased with a high quality lithium complex soap grease KP2P-30 according to DIN 51825 and must be relubricated during operation.

The carriages in the actuators are sealed, have an initial greasing and can be relubricated. The ball bearings fitted in the return units of linear and clamping actuators or the tapered roller bearings in tandem actuators are sealed and lubricated for life.

Structure of suitable greases

Greases suitable for the linear recirculating ball bearing and guideway assemblies have the following composition:

- lithium soap or lithium complex soap grease with base oil having a mineral oil base
- special anti-wear additives for loads $C/P < 8$, indicated by “P” in the DIN designation
- base oil viscosity ISO VG 68 to ISO VG 100
- consistency in accordance with NLGI grade 2.

If different greases are used, their miscibility and compatibility must be checked first.

Relubrication intervals

The relubrication intervals are essentially dependent on the following factors:

- the travel velocity of the carriage units
- the load
- the operating temperature
- the stroke length
- the environmental conditions and environmental influences
- the mounting position.

The cleaner the environment, the lower the lubricant consumption.

Calculation of the relubrication interval

Since it is not possible to calculate all the influencing factors, the time at which relubrication must be carried out and the quantity of lubricant which must be used can only be precisely determined under actual operating conditions. If no precise data are available, the values for many applications can be taken from the table, page 237. An approximation method can be used, however, to determine a guide value for many applications, see page 54.

Relubrication must be carried out, irrespective of the result of this calculation, no more than 1 year after the last lubrication.

Fretting corrosion is a consequence of lubricant starvation and is visible as a reddish discolouration of the rolling element raceways. Lubricant starvation can lead to permanent damage to the system and therefore to its failure. It must be ensured that the lubrication intervals are reduced accordingly in order to prevent fretting corrosion.

When calculating the relubrication interval, the grease operating life must also be checked. This is restricted to a maximum of 3 years due to the ageing resistance of the grease. It is the user’s responsibility to obtain information on this matter from the lubricant manufacturer.

Relubrication quantities

Relubrication should be carried out wherever possible with several partial quantities at various times instead of the complete quantity at the time of the relubrication interval. Grease quantities, see table.

Grease quantities

Linear actuator	Relubrication quantity per lubrication nipple and per longitudinal face ≈g
MKUVE15..-ZR	2 to 3
MKUVE20..-C-ZR	4 to 5
MKUVE25..-ZR	5 to 6
MKUSE25..-ZR	6 to 7
MKUVE20..-C-LN-ZR	4 to 5
MKUVE25..-LN-ZR	5 to 6
MKUVE25..-HS-ZR	5 to 6
MKUVE25..-ZR..-GTRI MKUSE25..-ZR..-GTRI	5 to 6

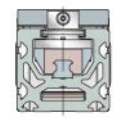

Relubrication procedure

Relubrication should be carried out whilst the carriage unit is moving and warm from operation over a minimum stroke length corresponding to one carriage unit length.

During lubrication, it must be ensured that the grease gun, grease, lubrication nipple and the environment of the lubrication nipple are clean.

The lubrication method involves loss of lubricant. The used lubricant must be collected and disposed of by methods that help to protect the environment.

The use of lubricants is governed by national regulations for environmental protection and occupational safety as well as information from the lubricant manufacturers. These regulations must be observed in all cases.

Lubrication nipples

In the case of actuators MKUVE..-ZR and MKUSE..-ZR, relubrication of the integrated guidance system is carried out exclusively via a funnel type lubrication nipple in the longitudinal face of the carriage unit, *Figure 39*.

MKUVE..-ZR
MKUSE25..-ZR

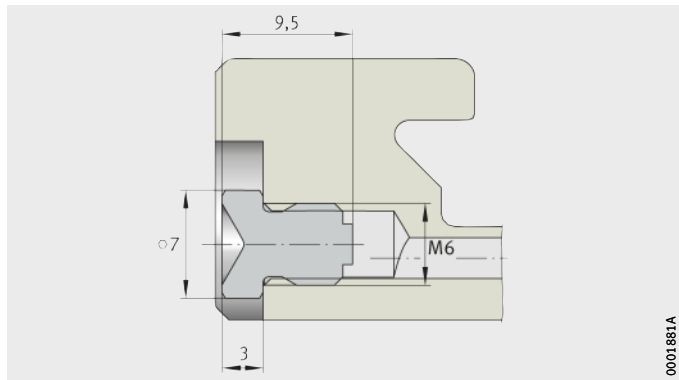

Figure 39
Funnel type lubrication nipple
NIP DIN 3405-A M6

The carriage units of size 20 and 25 can be connected to a semi-automatic or fully automatic central lubrication system. In this case, the funnel type lubrication nipples must be replaced by a straight or angled screw-in connector with a M6×1 thread. The central lubrication system is connected by means of pipes or hoses.

Relubrication points

The carriages have funnel type lubrication nipples according to DIN 3405-A M6 on the right or left longitudinal side of each carriage unit. Furthermore, they can be relubricated, *Figure 40*, *Figure 42*, *Figure 43* and table, page 239.

In the case of actuators with a longer carriage unit, both carriages are relubricated via separate lubrication ducts.

During lubrication of actuators, all lubrication points on one longitudinal side of a carriage unit must always be provided with lubricant.

MKUVE15..-ZR

① Funnel type lubrication nipple NIP A1

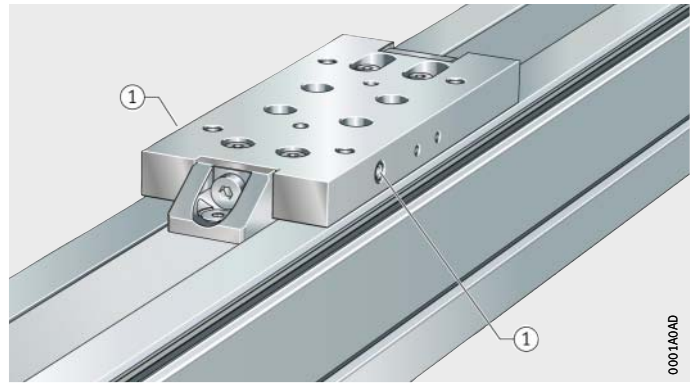

Figure 40
Lubrication points on carriage

MKUVE20..-ZR
MKUVE25..-ZR
MKUSE25..-ZR

① Funnel type lubrication nipple DIN 3405-A M6

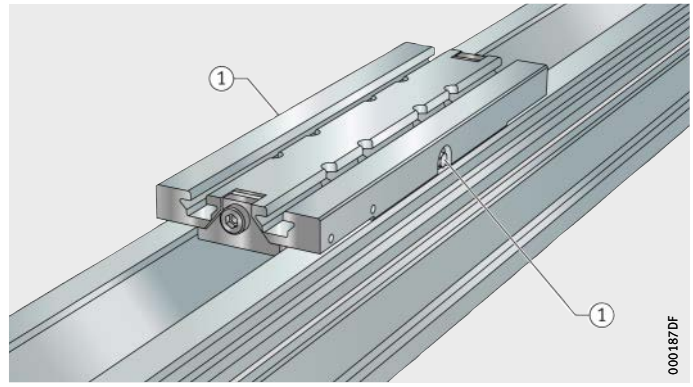

Figure 41
Lubrication points on short carriage unit

MKUVE20..-ZR
MKUVE25..-ZR
MKUSE25..-ZR

① Funnel type lubrication nipple DIN 3405-A M6

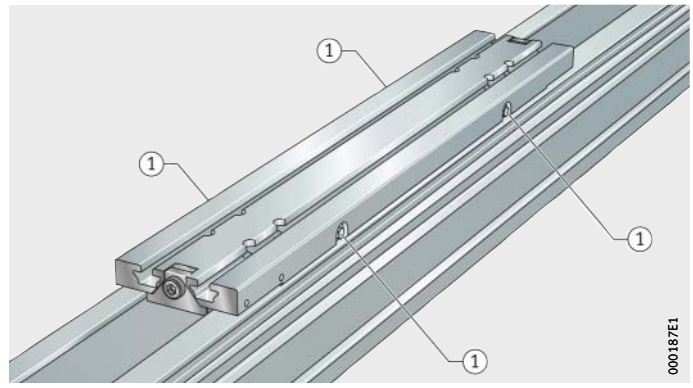

Figure 42
Lubrication points on long carriage unit

Position of relubrication points

Designation	Mounting dimensions			
	S_{56} mm	h_{56} mm	l_{56} mm	l_{57} mm
MKUVE15-140-ZR	–	7,1	104,4	–
MKUVE15-260-ZR	–	7,1	130	–
MKUVE15-400-ZR	–	7,1	200	–
MKUVE20-250-C..-ZR..-N	15	13,5	125	–
MKUVE20-500-C..-ZR..-N				297
MKUVE25-250..-ZR	15	15,8	133,5	–
MKUVE25-500..-ZR				–
MKUSE25-250..-ZR	15	15,8	133,5	–
MKUSE25-500..-ZR			257,5	–

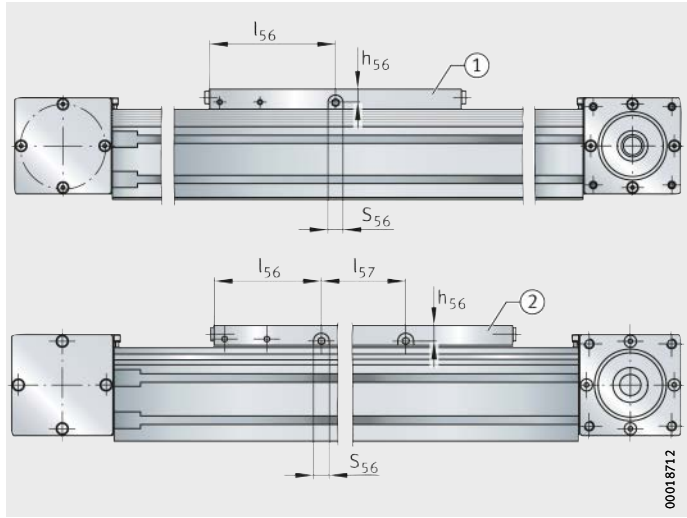

① Short carriage unit
② Long carriage unit

Figure 43
Position of lubrication points, basic carriage

T-slots

The T-slots in the support rail and the carriage unit are designed for T-bolts according to DIN 787 and T-nuts according to DIN 508 (with the exception of T-slot size 4,5).

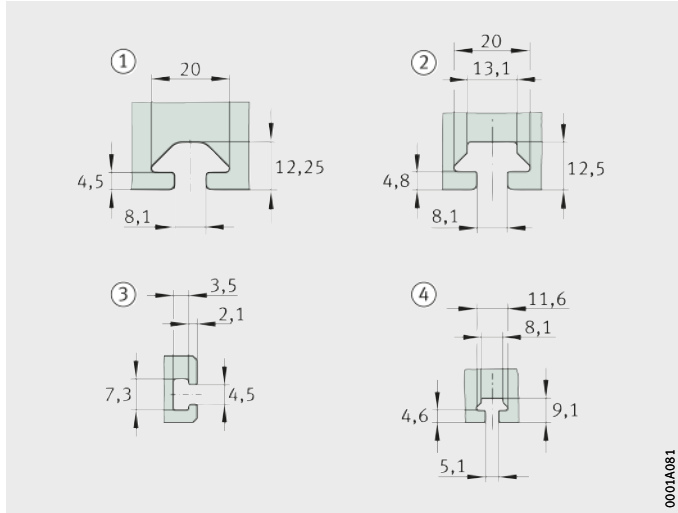

① T-slot size 8, type A
② T-slot size 8, type B
③ T-slot size 4,5
④ T-slot size 5

Figure 44
Sizes of T-slots in support rail and carriage unit

Dimensions of T-slots

Designation	Support rail		Carriage unit	
	Lateral	Bottom	Top	Lateral
MKUVE15..-ZR	④	④	–	–
MKUVE20..-ZR	②	②	②	③
MKUVE25..-ZR	①	①	②	–
MKUSE25..-ZR	①	①	②	–

Filling openings

The filling opening is always on the opposing side to the drive, *Figure 45*.

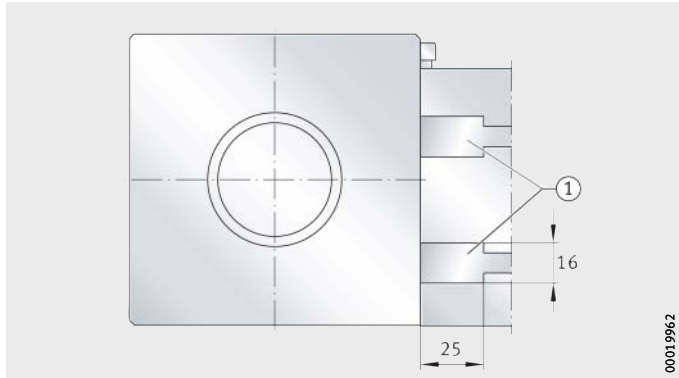

① Filling slot

Figure 45
Filling opening in the support rail

Connectors for switching tags

Switching tags can be screw mounted to the carriage unit in order to activate switches in the adjacent construction. The position and size are dependent on the size, *Figure 46* and table.

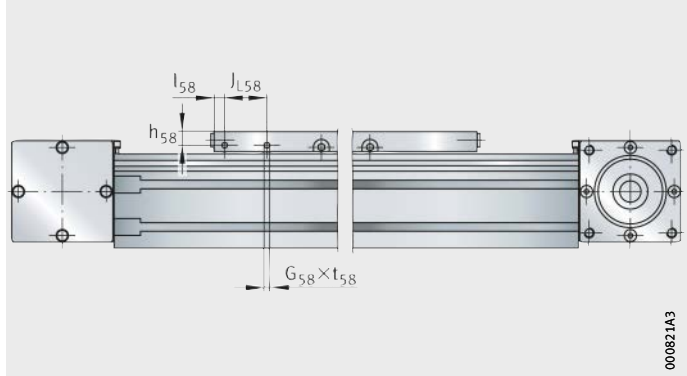

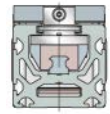

Figure 46
Connectors for switching tags on the carriage unit

Mounting dimensions for switching tags

Series Actuator	Mounting dimensions				
	J_{L58} mm	l_{58} mm	h_{58} mm	G_{58} mm	$t_{58\ max}$ mm
MKUVE15-140-ZR[1)]	15	62,5	8	M3	10
MKUVE15-260-ZR[1)]	15	51	8	M3	10
MKUVE15-400-ZR[1)]	15	51	8	M3	10
MKUVE20-250-C..-ZR..-N[2)]	–	–	12	–	–
MKUVE20-500-C..-ZR..-N[2)]					
MKUVE25-250..-ZR	40	10	15	M5	10
MKUVE25-500..-ZR					
MKUSE25-250..-ZR	40	10	15	M5	10
MKUSE25-500..-ZR					

1) Switching tags on both sides of the carriage unit (symmetrical).

2) Carriage unit with lateral T-slot.

Mounting position and mounting arrangement

Due to their construction and the linear guidance system fitted, actuators are suitable for all mounting positions and mounting arrangements, *Figure 47*, *Figure 48* and *Figure 49*.

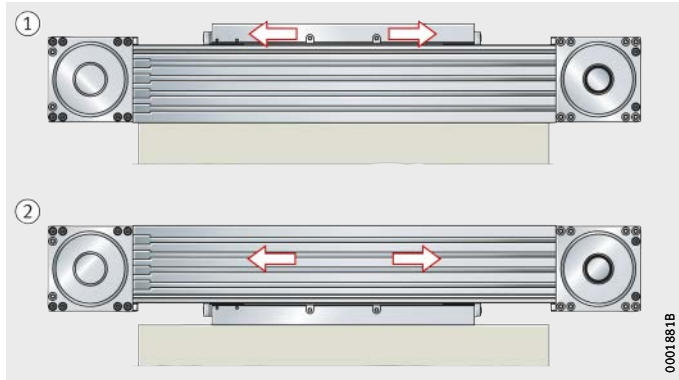

① Movable carriage unit
② Stationary carriage unit

Figure 47
Movable or stationary carriage

Actuators with toothed belt drive

The actuators can be used in the “common” horizontal mounting position and also in a vertical mounting position. In particular, tandem actuators with a triple toothed belt drive and the associated level of security offer good characteristics for fulfilling requirements involving a vertical axis.

Mounting of actuators with a carriage unit to one side or suspended overhead is possible. In such cases, please consult the Schaeffler engineering service.

The carriage unit and load must be secured against autonomous travel or dropping if the actuators are used in a vertical or tilted mounting position. This can be achieved, for example, by means of a brake or counterweight. The drop guard must function in manual operation as well as in motor operation, especially if the motor has no current.

Safety guidelines, especially in relation to personal protection, must be observed.

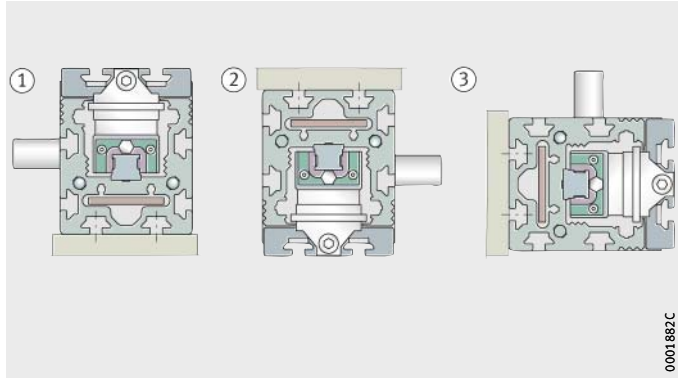

① Mounting position 0°
② Mounting position 180°
③ Mounting position 90°

Figure 48
Mounting positions

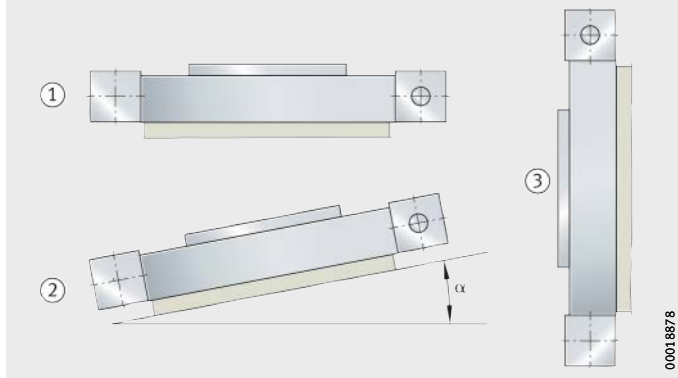

① Horizontal
② Tilted
③ Vertical

Figure 49
Mounting positions

Mounting

The normal steps in the mounting of an actuator are as follows:

- location of the support rail on the adjacent construction
- mounting of the components to be moved on the carriage unit or carriage units.

Fixing by means of T-nuts

In order to facilitate the insertion of T-nuts and T-bolts, all support rail segments have lateral filling openings.

Actuators longer than 8 000 mm

Actuators longer than 8 000 mm are supplied as multi-piece units. These are supplied partially assembled after function checking. At their destination, these actuators must then be assembled in accordance with the fitting manual supplied.

Any parts necessary for joining of the support rail segments and screw mounting of the second return unit are also supplied. These include retaining plates, fixing screws, nuts and dowels.

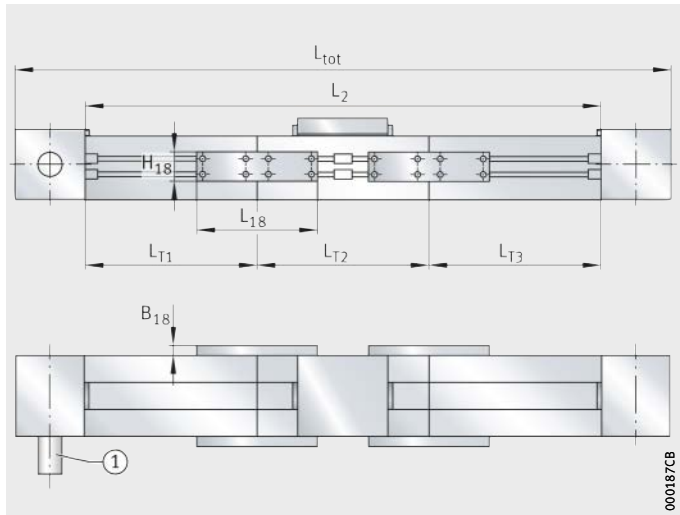

① Drive

Figure 50
Actuators longer than 8 000 mm, L_{T1} is always on the drive side

Interchange of actuator components

For the fitting and assembly of actuator components, a fitting and maintenance manual is available for each series of actuator. Please consult the Schaeffler engineering service.

Maintenance

Failure to carry out maintenance, incorrect maintenance, assembly errors and lubrication errors as well as inadequate protection against contamination can lead to premature failure of actuators.

Maintenance work is restricted in general to relubrication, cleaning and regular visual inspection for damage.

Maintenance intervals, especially the intervals between relubrication, are influenced by:

- the travel velocity of the carriage unit
- the load
- the temperature
- the stroke length
- the environmental conditions and influences.

Guidance parts relevant to function must be greased and supplied with lubricant via appropriate lubrication points.

Cleaning

If heavy contamination is present, actuators must be cleaned in order to ensure reliable function. Suitable cleaning tools include paintbrushes, soft brushes and soft cloths.

Abrasives, petroleum ether and oils must not be used.

Accuracy
Length tolerances

The length tolerances of actuators are shown in *Figure 51* and the table. The data are valid for all actuators described in this chapter.

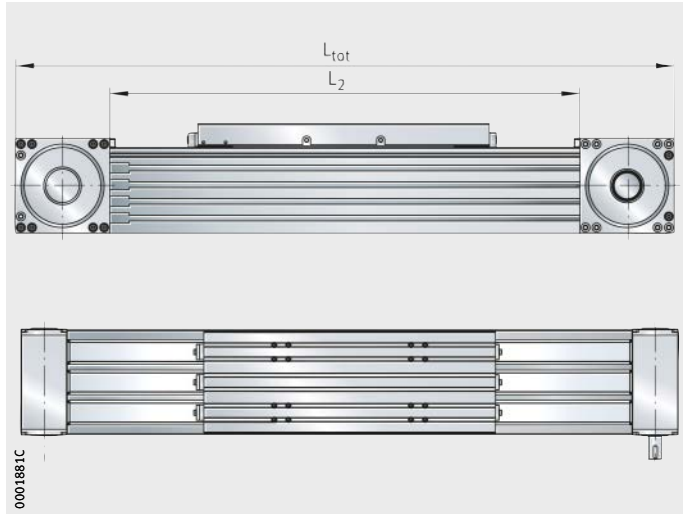

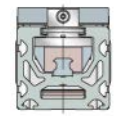

L_{tot} = total length
L_2 = length of support rail

Figure 51
Length tolerances

Tolerances

Total length L_{tot} of actuator mm		Tolerance mm
Single-piece actuator	$L_{tot} < 1\,000$	±2
	$1\,000 \leqq L_{tot} < 2\,000$	±3
	$2\,000 \leqq L_{tot} < 4\,000$	±4
	$4\,000 \leqq L_{tot}$	±5
Multi-piece actuator (where permitted by the design)	All lengths	±0,1% of L_{tot}

Straightness of support rails

The support rails in actuators are precision straightened and the tolerances are better than DIN 17615.

The tolerances are arithmetic mean values and are stated for individual series and sizes, see tables.

Tolerances
Size: MKUVE15

Length L_2 of support rail mm	MKUVE15..-ZR t_2 mm	t_3 mm	Torsion mm
$L_2 \leqq 1000$	0,4	0,3	0,3
$1000 < L_2 \leqq 2000$	0,8	0,6	0,6
$2000 < L_2 \leqq 3000$	1,2	0,9	0,9
$3000 < L_2 \leqq 4000$	1,5	1,2	1,2
$4000 < L_2 \leqq 5000$	1,9	1,5	1,5
$5000 < L_2 \leqq 6000$	2,5	1,8	1,8

Tolerances
Sizes: MKUVE20, MKUVE25, MKUSE25

Length L_2 of support rail mm	MKUVE20..-C-ZR t_2 mm	t_3 mm	Torsion mm	MKUSE25..-ZR MKUVE25..-ZR t_2 mm	t_3 mm	Torsion mm
$L_2 \leqq 1000$	0,4	0,3	0,8	0,4	0,3	0,5
$1000 < L_2 \leqq 2000$	0,8	0,5	1	0,8	0,5	1
$2000 < L_2 \leqq 3000$	1,2	0,7	1,2	1,2	0,7	1,5
$3000 < L_2 \leqq 4000$	1,5	1	1,6	1,5	1	2
$4000 < L_2 \leqq 5000$	1,9	1,2	1,8	1,9	1,2	2,5
$5000 < L_2 \leqq 6000$	2,5	1,5	2	2,5	1,5	3
$6000 < L_2 \leqq 7000$	2,9	1,8	2,2	2,9	1,8	3,5
$7000 < L_2$	3,4	2,1	2,4	3,4	2,1	4

Figure 52 shows the method for determining the straightness of the support rail.

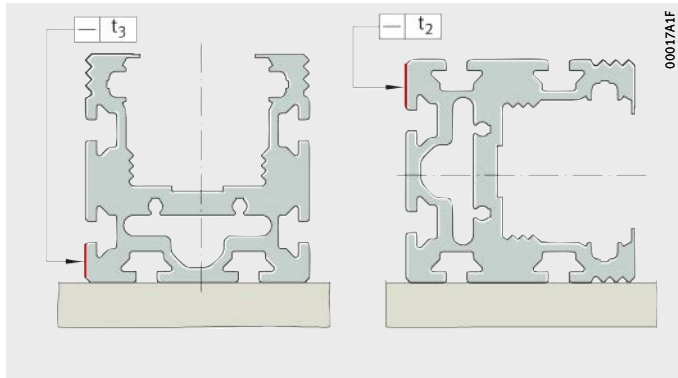

t_2, t_3 = straightness tolerance

Figure 52
Measurement method for straightness tolerances

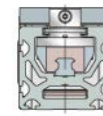

Ordering example, ordering designation

Available designs of linear actuators MKUVE and MKUSE, see table.

Available designs

Design	Linear actuator with linear recirculating ball bearing and guideway assembly and toothed belt drive		
Size	Size code		
Carriage plate length	Length	L	mm
Design	Basic	●	
	Low Noise	LN	
	High Speed	HS	
Type of drive	Toothed belt	ZR	
Drive variants	Drive shaft	●	
	Integrated planetary gearbox	GTRI	
Additional function	Integrated planetary gearbox	GTRI	
	Gear reduction ratio	i	
Additional carriage unit	Second, driven carriage unit	W2	
	Spacing L_{xn} between carriage units		mm
Anti-corrosion protection[1]	Corrosion-resistant design	RB	
Location of carriage unit	Threaded holes		
	T-slots	N	
Support rail	Single-piece		
	Two-piece[1) 2)]	FA517.1	
	Support rail segment lengths	L_{T1}	mm
		L_{T2}	mm
	Three-piece[1) 2)]	FA517.2	
	Support rail segment lengths	L_{T1}	mm
		L_{T2}	mm
		L_{T3}	mm
Lengths	Total length	L_{tot}	mm
	Total stroke length	G_H	mm

● Standard scope of delivery.

■ Design not available.

1) Not suitable for combination with integrated planetary gearbox (GTRI).

2) Not possible with High Speed design.

Designation and suffixes			
MKUVE			MKUSE
15	20	25	25
140, 260, 400	250, 500	250, 500	250, 500
●	C	●	●
■	C-LN	LN	■
■	■	HS	■
ZR	ZR	ZR	ZR
AL, AR, RL, AL-AL, AL-AR, AL-RL, AR-AL, AR-AR, AR-RL, RL-AL, RL-AR, RL-RL, OZ			
■	■	AL, AR, AL-AL, AL-AR, AL-RL, AR-AL, AR-AR, AR-RL	
■	■	GTRI	GTRI
■	■	4; 8	4; 8
W2			
State value for L_{x1} (L_{xn} ≧ 50 mm)			
■	■	RB	■
●	■	●	●
■	N	N	N
●	●	●	●
■	FA517.1		
	State value for L_{T1} and L_{T2}, see page 231 If these lengths are not stated, L_{T1} and L_{T2} will be determined by Schaeffler.		
■	FA517.2		
	State value for L_{T1}, L_{T2} and L_{T3}, see page 231 If these lengths are not stated, L_{T1}, L_{T2} and L_{T3} will be determined by Schaeffler.		
to be calculated from total stroke length, see page 231			
to be calculated from effective stroke length, see page 231			

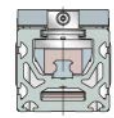

Monorail guidance system, toothed belt drive

Linear actuator with one linear recirculating ball bearing and guideway assembly	MKUVE
Size code	20
Carriage unit length L	250 mm
Design	C
Low Noise design	LN
Drive by toothed belt	ZR
Drive shaft on left side – right side	AL-AR
Second, driven carriage unit	W2
Spacing between carriage units L_{x1}	200 mm
Carriage unit with T-slots	N
Total length L_{tot}	2 216 mm
Total stroke length G_H	1 300 mm

Ordering designation

MKUVE20-250-C-LN-ZR-AL-AR-W2-N/2216-1300 (L_{x1} = 200 mm), *Figure 53*

Note total length L_1 of first carriage unit and carriage unit length L of second carriage unit. Spacing L_{x1} between carriage units must be stated.

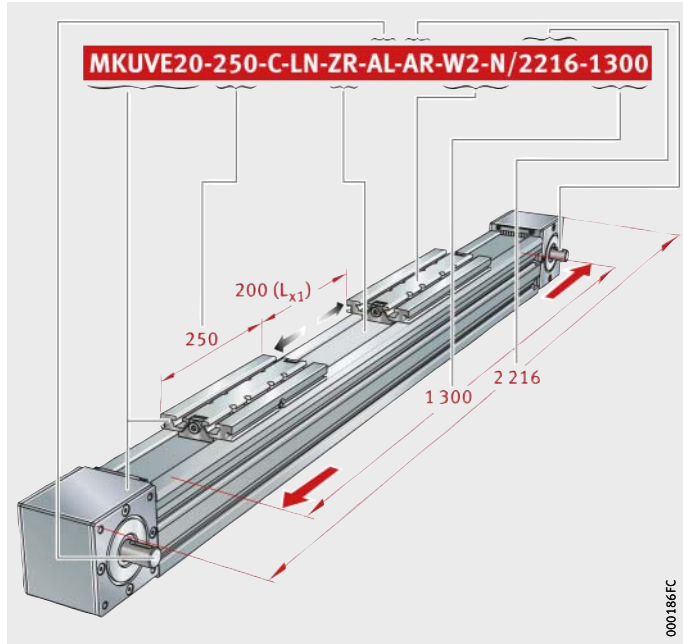

Figure 53
Ordering designation

Monorail guidance system, toothed belt drive

Linear actuator with one linear recirculating ball bearing and guideway assembly	MKUVE
Size code	25
Carriage unit length L	250 mm
High Speed design	HS
Drive by toothed belt	ZR
Drive shaft on both sides	RL
Carriage unit with T-slots	N
Total length L_{tot}	3 006 mm
Total stroke length G_H	2 500 mm

Ordering designation

MKUVE25-250-HS-ZR-RL-N/3006-2500, *Figure 54*

Note total length L of carriage unit.

Figure 54
Ordering designation

Monorail guidance system, toothed belt drive

Linear actuator with one linear recirculating ball bearing and guideway assembly	MKUSE
Size code	25
Carriage unit length L	500 mm
Basic design	–
Drive by toothed belt	ZR
Drive shaft on left side	AL
Second, driven carriage unit	W2
Spacing between carriage units L_{x1}	300 mm
Carriage unit with threaded holes	–
Two-piece support rail with support rail segment lengths L_{T1} = 4 900 mm and L_{T2} = 4 925 mm	FA517.1
Total length L_{tot}	10 056 mm
Total stroke length G_H	8 500 mm

Ordering designation

MKUSE25-500-ZR-AL-W2-FA517.1/10056-8500 (L_{x1} = 300 mm), *Figure 55*

Note total length L_1 of carriage unit. Support rail segment lengths L_{T1} and L_{T2} must be stated.

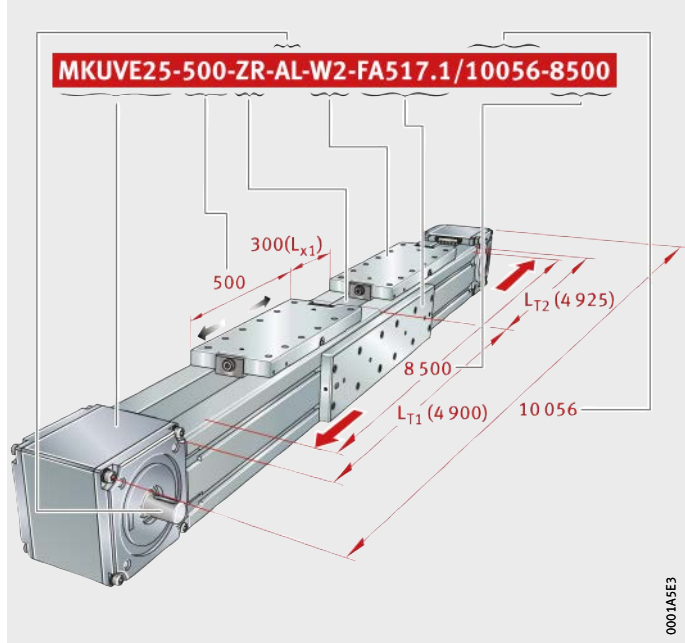

Figure 55
Ordering designation

Monorail guidance system, toothed belt drive

Linear actuator with one linear recirculating ball bearing and guideway assembly	MKUSE
Size code	25
Carriage unit length L	250 mm
Drive by toothed belt	ZR
Drive shaft on right side	AR
Integrated planetary gearbox	GTRI
Gear reduction ratio	4
Second, driven carriage unit	W2
Spacing between carriage units L_{x1}	200 mm
Carriage unit with threaded holes	–
Total length L_{tot}	2 256 mm
Total stroke length G_H	1 300 mm

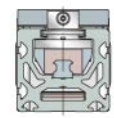

Ordering designation

MKUSE25-250-ZR-AR-GTRI/4-W2/2256-1300 (L_{x1} = 200 mm), *Figure 56*

Note total length L_1 of first carriage unit and carriage plate length L of second carriage unit. Spacing L_{x1} between carriage units must be stated.

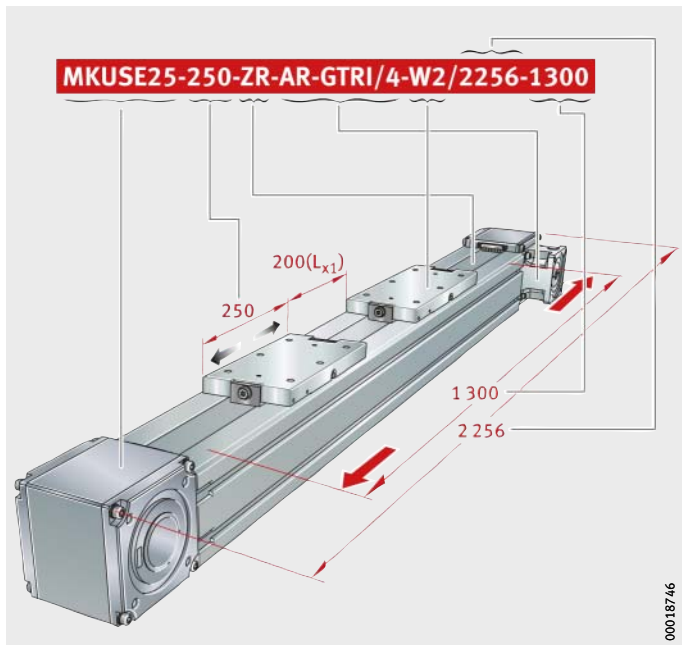

Figure 56
Ordering designation

Actuators

Four-row linear recirculating ball bearing and guideway assembly
Toothed belt drive
Basic design

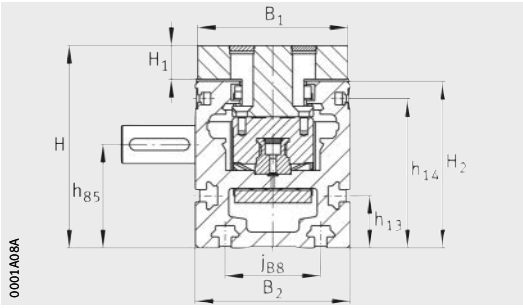

MKUVE15..-ZR

Dimension table · Dimensions in mm

Designation	Dimensions			Mounting dimensions									
Actuators	B_2	H	L	B_1	d_{85} h7	D_{86} +0,03	G_{43}	G_{87}	h_{13}	h_{14}	h_{56}	h_{85}	h_{87} ±0,2
MKUVE15-140-ZR	65	85	140	63	16	47	M6	M6	22	62,7	30	43,5	51
MKUVE15-260-ZR			260										
MKUVE15-400-ZR			400										

Calculation of lengths L_2 and L_{tot}, see page 231.

1) ① 2 lubrication nipples NIP A1, see page 238.
② Filling openings in carrier profile, see page 240.
③ Switching tag connectors on carriage unit, see page 241.

2) Integrated return unit.

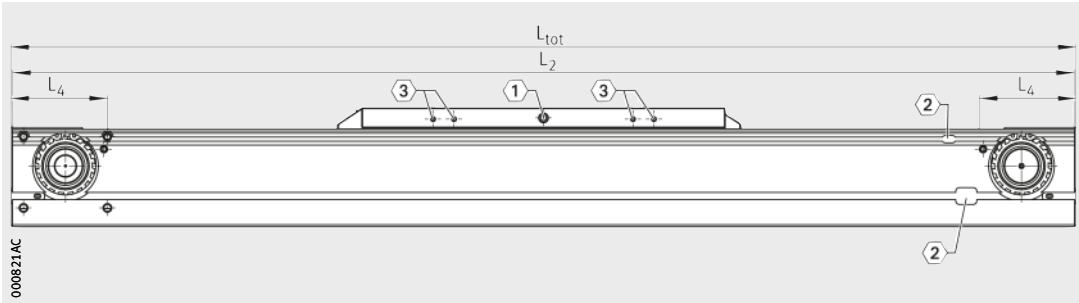

MKUVE15..-ZR
⟨1⟩, ⟨2⟩, ⟨3⟩ [1) 2)]

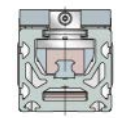

H_1	H_2	j_{B8}	J_{B43}	J_{L43}	J_{L44}	J_{L45}	l_{85}	l_{87} ±0,2	L_1	L_4	L_5	L_{21}	L_{88}	N_{B85}	N_{L85}	N_{T85}	t_{43}	t_{87} max.	T_{86}
					–	–			178										
14,2	70	40	45	80	240	–	39,3	60	298	77,5	9,3	1	31	5	25	3	14	12	1,6
					220	380			438										

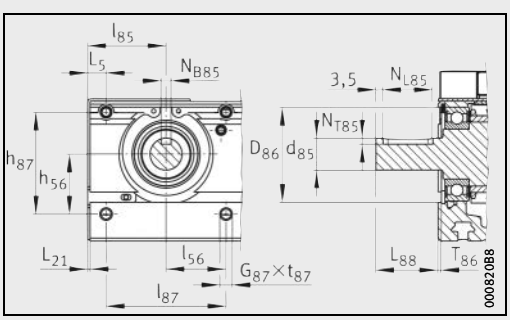

MKUVE15..-ZR · Drive flange, drive shaft

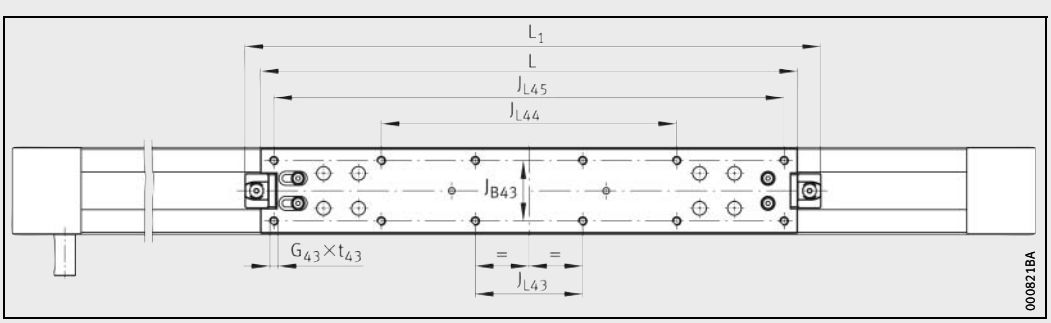

MKUVE15..-ZR · Top view

Actuators

Four-row linear recirculating ball bearing and guideway assembly
Toothed belt drive
Performance data

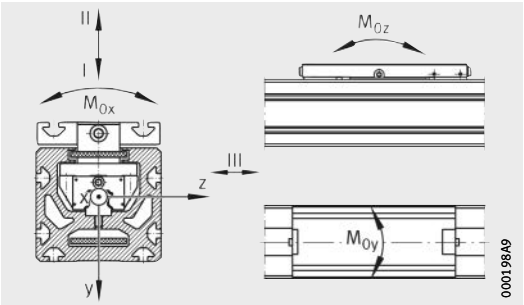

Load directions

Performance data

Designation		Carriage unit guidance system for each carriage unit								
		Basic load ratings per carriage unit						Permissible static moment ratings per carriage unit[1]		
		Load direction I Compressive load		Load direction II Tensile load		Load direction III Lateral load				
		dyn. C N	stat. C_0 N	dyn. C N	stat. C_0 N	dyn. C N	stat. C_0 N	$M_{0x\ per}$ Nm	$M_{0y\ per}$ Nm	$M_{0z\ per}$ Nm
MKUVE15-140-ZR	**MKUVE15-140-ZR-W2**	7 200	14 500	7 200	14 500	7 200	14 500	120	80	80
MKUVE15-260-ZR	**MKUVE15-260-ZR-W2**	11 700	29 000	11 700	29 000	11 700	29 000	245	2 600	3 100
MKUVE15-400-ZR	**MKUVE15-400-ZR-W2**									

1) The values are single loads and apply when the underside of the actuator is fully supported.
These must be reduced for combined loads.

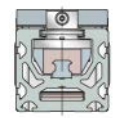

Carriage			Moment of inertia of area of carrier profile		Drive					
	Spacings				Feed per revolution	Maximum drive torque	Toothed belt			Toothed gears
							Type	Mass m	Permissible operating force	Mass moment of inertia
	R_x	R_y	I_y	I_z						
	mm	mm	cm^4	cm^4	mm	Nm		kg/m	N	$kg \cdot cm^2$
1×KWVE 15- B-S	–	44	84	107	144	32	W-8-PU-32-STD	0,36	1 400	1,3
2×KWVE 15- B-S	140	44								
	280	44								

Actuators
Low Noise actuators
High Speed actuators

Four-row linear recirculating ball bearing and guideway assembly
Toothed belt drive
Basic design

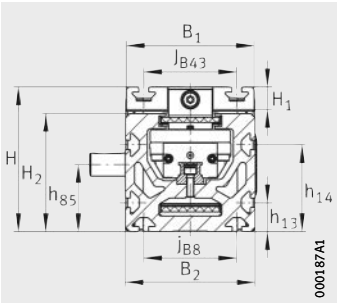

MKUVE25..-ZR(-N)

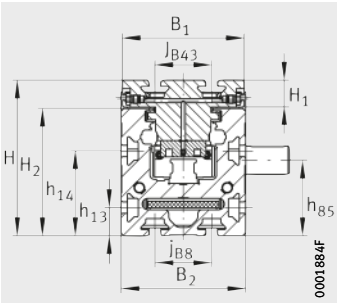

MKUVE20..-C-ZR-N

Dimension table · Dimensions in mm

Designation	Dimensions			Mounting dimensions													
Actuators	B_2	H	L	B_1	B_4	B_{72}	d_{85} h7	d_{86}	D_{86} G7	D_{87}	G_{43}	G_{87}	h_{13}	h_{14}	h_{85}	H_1	H_2
MKUVE20-250-C-ZR-N	88	110	250	86	89	–	20	61	68	110	–	M6	20	60	53,4	19	90
MKUVE20-500-C-ZR-N			500														
MKUVE25-250-ZR-N	112	125	250	110	111	2	20	76	95	115	–	M8	25	75	58	21	102
MKUVE25-500-ZR-N			500														
MKUVE25-250-ZR	112	125	250	110	111	2	20	76	95	115	M10	M8	25	75	58	21	102
MKUVE25-500-ZR			500														

Low Noise actuators have the suffix LN.
Example: MKUVE25-500-LN-ZR-N

High Speed actuators are only available in the design MKUVE25..-ZR and have the suffix HS.
Example: MKUVE25-500-HS-ZR-N

Calculation of lengths L_2 and L_{tot}, see page 231.

1) Utilisation of the T-slots is restricted by the holes.

2) (1) Carriage units with a length of 250 mm have 2 lubrication nipples according to DIN 3405-A M6, see page 238.
Carriage units with a length of 500 mm have 4 lubrication nipples according to DIN 3405-A M6, see page 238.
(2) Filling openings in carrier profile, see page 240.
(3) Switching tag connectors on carriage unit, see page 241.

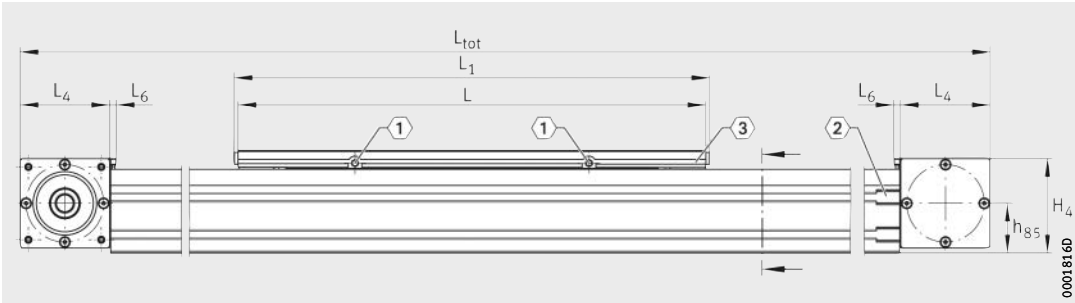

MKUVE20..-C-ZR-N, MKUVE25..-ZR(-N)
1, 2, 3 [2)]

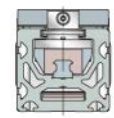

H_4	j_{B8}	J_{B43}	J_{L43}	J_{L44}	J_{L45}	l_{41} [1)]	l_{42} [1)]	L_1	L_4	L_6	L_{88}	N_{B85}	N_{L85}	N_{T85}	S_{41} [1)]	t_{43} max.	t_{87}	T_{86}
101,4	40	40 [1)]	–	–	–	59,5	36	260 510	97	6	31	6^{P9}	25	3,5	10	–	24	$2,3^{+0,3}$
115,7	80	80 [1)]	–	–	–	–	–	263 513	115,5	6	31	6^{P9}	25	3,5	–	–	15	$4^{+0,5}$
115,7	80	$80^{\pm 0,1}$	180 90	– 270	– 450	–	–	263 513	115,5	6	31	6^{P9}	25	3,5	–	20	15	$4^{+0,5}$

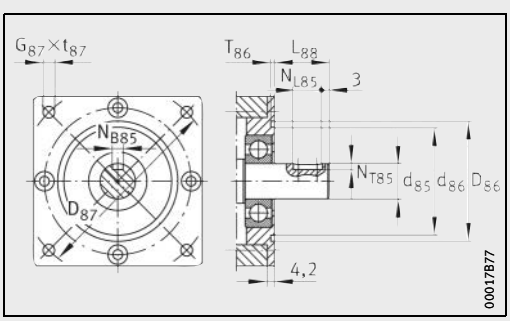

MKUVE20..-C-ZR-N, MKUVE25..-ZR(-N) ·
Drive flange, drive shaft

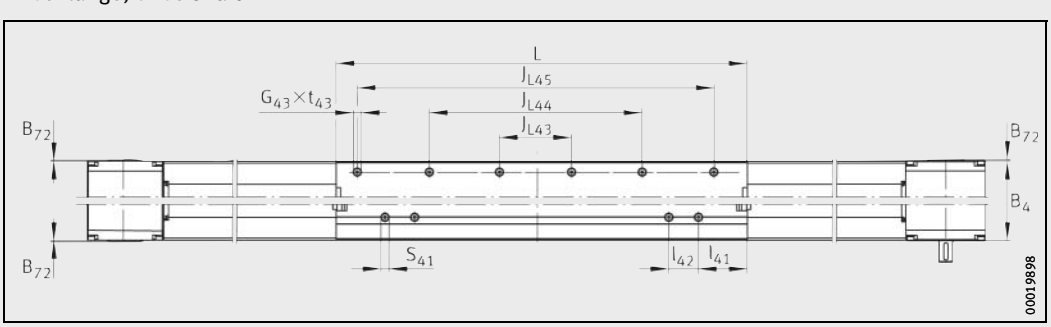

MKUVE25..-ZR(-N) · Top view

Actuators

Low Noise actuators

Four-row linear recirculating ball bearing and guideway assembly
Toothed belt drive
Multi-piece support rails

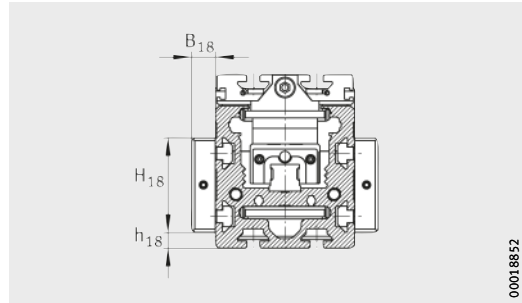

MKUVE..-ZR-N-FA517

Dimension table · Dimensions in mm

Designation		Mounting dimensions			
Two segments	Three segments	B_{18}	H_{18}	h_{18}	L_{18}
MKUVE20-250-C-ZR-N-FA517.1	**MKUVE20-250-C-ZR-N-FA517.2**	15	60	10	400
MKUVE20-500-C-ZR-N-FA517.1	**MKUVE20-500-C-ZR-N-FA517.2**				
MKUVE25-250-ZR-N-FA517.1	**MKUVE25-250-ZR-N-FA517.2**	15	90	5	400
MKUVE25-500-ZR-N-FA517.1	**MKUVE25-500-ZR-N-FA517.2**				
MKUVE25-250-ZR-FA517.1	**MKUVE25-250-ZR-FA517.2**	15	90	5	400
MKUVE25-500-ZR-FA517.1	**MKUVE25-500-ZR-FA517.2**				

Other geometrical features, see page 258 and page 259.

Low Noise actuators have the suffix LN.
Examples: MKUVE20-250-C-LN-ZR-N-FA517.1, MKUVE25-500-LN-ZR-N-FA517.2

Support rails: segment lengths (L_{Tn} ≧ 500 mm), see page 231.

[1] ① The segment lengths L_{Tn} must always be designated in ascending order starting from the drive side.

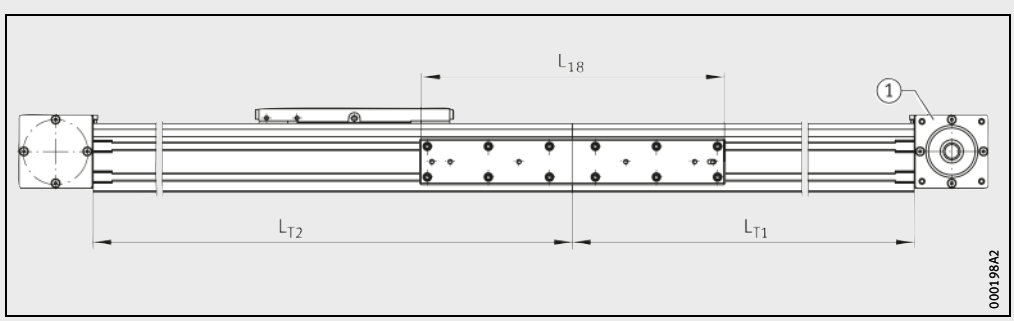

MKUVE20..-C-ZR-N-FA517.1, MKUVE25..-ZR(-N)-FA517.1 · Two segments
① [1]

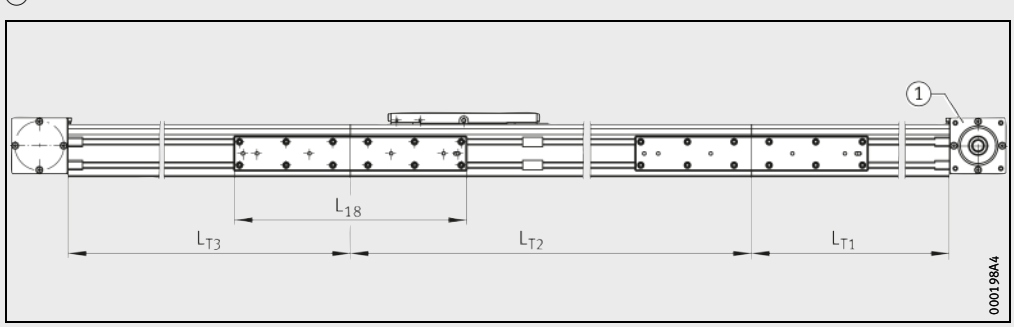

MKUVE20..-C-ZR-N-FA517.2, MKUVE25..-ZR(-N)-FA517.2 · Three segments
① [1]

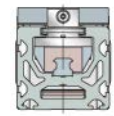

Actuators
Low Noise actuators
High Speed actuators

Four-row linear recirculating ball bearing and guideway assembly
Toothed belt drive
Performance data

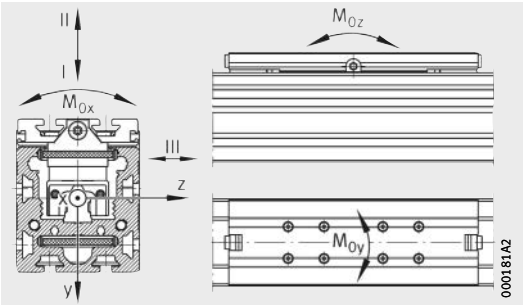

Load directions

Performance data

Designation	Carriage unit guidance system for each carriage unit								
	Basic load ratings per carriage unit						Permissible static moment ratings per carriage unit[1]		
	Load direction I Compressive load		Load direction II Tensile load		Load direction III Lateral load				
	dyn. C N	stat. C_0 N	dyn. C N	stat. C_0 N	dyn. C N	stat. C_0 N	$M_{0x\ per}$ Nm	$M_{0y\ per}$ Nm	$M_{0z\ per}$ Nm
MKUVE20-250-C-ZR (-W2)-N (-FA517)	21 300	54 000	21 300	54 000	21 300	54 000	664	1 600	1 600
MKUVE20-500-C-ZR (-W2)-N (-FA517)								7 500	7 500
MKUVE25-250-ZR (-W2)-N (-FA517)	29 000	74 000	29 000	74 000	29 000	74 000	1 020	2 575	2 575
MKUVE25-500-ZR (-W2)-N (-FA517)								10 760	10 760
MKUVE25-250-ZR (-W2) (-FA517)	29 000	74 000	29 000	74 000	29 000	74 000	1 020	2 575	2 575
MKUVE25-500-ZR (-W2) (-FA517)								10 760	10 760

Low Noise actuators have the suffix LN.
Examples: MKUVE20-250-C-LN-ZR-N-FA517.1, MKUVE25-500-LN-ZR-N-FA517.2

High Speed actuators are only available in the design MKUVE25..-ZR and have the suffix HS.
Example: MKUVE25-500-HS-ZR-N

1) The values are single loads and apply when the underside of the actuator is fully supported.
If there are several carriage units per actuator or combined loads are present, these must be reduced.

2) Maximum permissible drive torque on drive stud.

3) For High Speed actuators: 2×KWVE25-B-HS.

4) For High Speed actuators: toothed belt 50BAT10.

5) For Low Noise actuators: toothed belt 50BAT10.

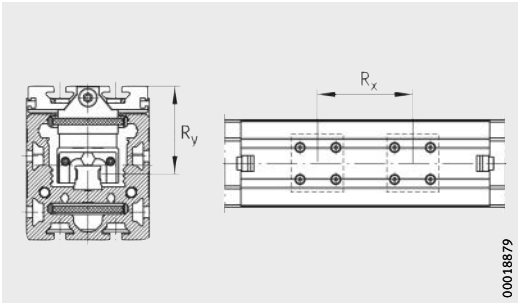

Mounting geometry of carriages

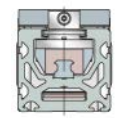

Carriage	Spacings		Moment of inertia of area of carrier profile		Drive					
					Feed per revolution	Maximum drive torque[2]	Toothed belt[4]			Toothed gears
							Type	Mass m	Permissible operating force	Mass moment of inertia
	R_x mm	R_y mm	I_y cm^4	I_z cm^4	mm	Nm		kg/m	N	$kg \cdot cm^2$
2×KWVE20-B-S	95 345	63	300	198	200	68,8	50AT10[5]	0,29	1 880	5
2×KWVE25-B[3]	110 360	71,8	712	506	250	75	50AT10[4]	0,29	1 880	14,7
2×KWVE25-B[3]	110 360	71,8	712	506	250	75	50AT10[4]	0,29	1 880	14,7

Actuators

Six-row linear recirculating ball bearing and guideway assembly
Toothed belt drive
Basic design

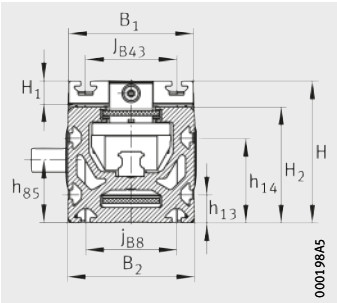

MKUSE25..-ZR

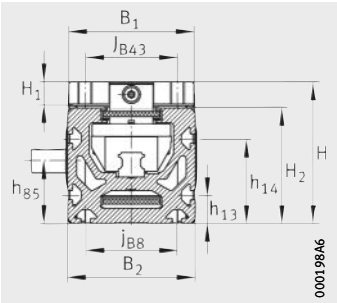

MKUSE25..-ZR

Dimension table · Dimensions in mm

Designation	Dimensions			Mounting dimensions														
	B_2	H	L	B_1	B_4	B_{72}	d_{85} h7	d_{86}	D_{86} G7	D_{87}	G_{43}	G_{87}	h_{13}	h_{14}	h_{85}	H_1	H_2	H_4
MKUSE25-250-ZR-N	112	125	250	110	111	2	20	76	95	115	–	M8	25	75	58	21	102	115,7
MKUSE25-500-ZR-N			500															
MKUSE25-250-ZR	112	125	250	110	111	2	20	76	95	115	M10	M8	25	75	58	21	102	115,7
MKUSE25-500-ZR			500															

Calculation of lengths L_2 and L_{tot}, see page 231.

1) Utilisation of the T-slots is restricted by the holes.

2) (1) Carriage units with a length of 250 mm have 2 lubrication nipples according to DIN 3405-A M6, see page 238.
Carriage units with a length of 500 mm have 4 lubrication nipples according to DIN 3405-A M6, see page 238.
(2) Filling openings in carrier profile, see page 240.
(3) Switching tag connectors on carriage unit, see page 241.

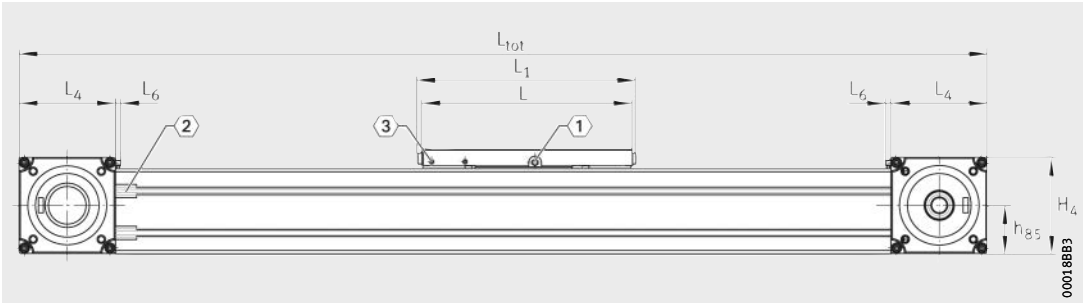

MKUSE25..-ZR(-N)
1, 2, 3 [2)]

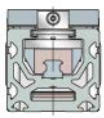

j_{B8}	J_{B43}	J_{L43}	J_{L44}	J_{L45}	l_{41} [1)]	l_{42} [1)]	L_1	L_4	L_6	L_{88}	N_{B85}	N_{L85}	N_{T85}	S_{41} [1)]	t_{43} max.	t_{87} max.	T_{86} +0,5
80	80	–	–	–	59,5	36	263 513	115,5	6	31	6^{P9}	25	3,5	10	–	15	4
80	$80^{\pm 0,1}$	180 90	– 270	– 450	–	–	263 513	115,5	6	31	6^{P9}	25	3,5	–	20	15	4

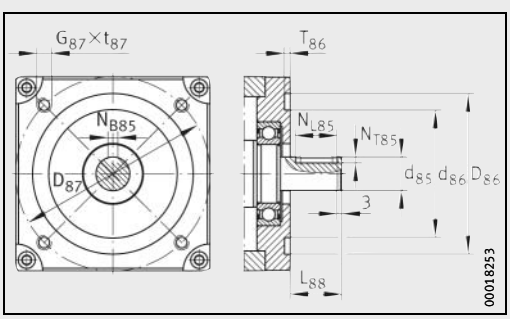

MKUSE25..-ZR(-N) · Drive flange, drive shaft

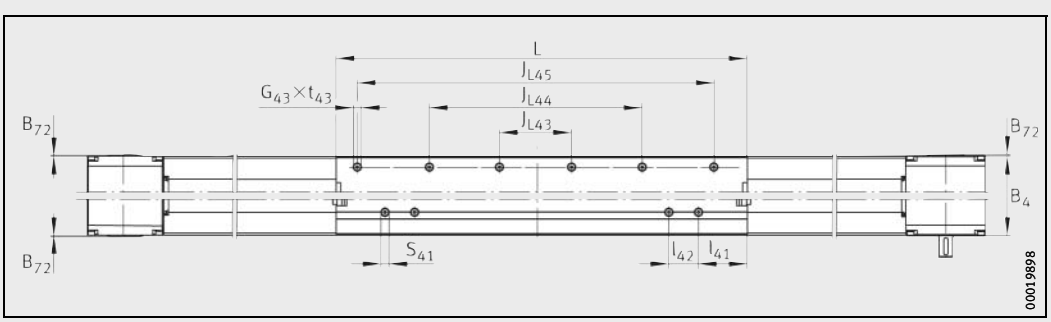

MKUSE25..-ZR(-N) · Top view

Actuators

Six-row linear recirculating ball bearing and guideway assembly
Toothed belt drive
Multi-piece support rails

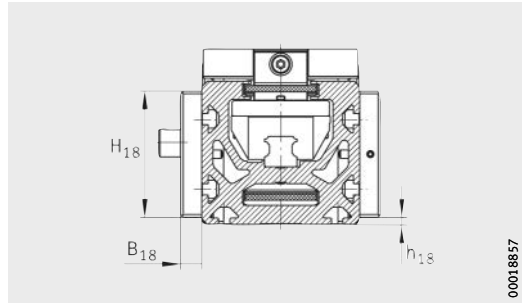

MKUSE25..-ZR..-FA517

Dimension table · Dimensions in mm

Designation		Mounting dimensions			
Two segments	Three segments	B_{18}	h_{18}	H_{18}	L_{18}
MKUVE25-250-ZR-N-FA517.1	**MKUSE25-250-ZR-N-FA517.2**	15	5	90	400
MKUVE25-500-ZR-N-FA517.1	**MKUSE25-500-ZR-N-FA517.2**				
MKUSE25-250-ZR-FA517.1	**MKUSE25-250-ZR-FA517.2**	15	5	90	400
MKUSE25-500-ZR-FA517.1	**MKUSE25-500-ZR-FA517.2**				

Other geometrical features, see page 258 and page 259.

Support rails: segment lengths (L_{Tn} ≧ 500 mm), see page 231.

1) ① The segment lengths L_{Tn} must always be designated in ascending order starting from the drive side.

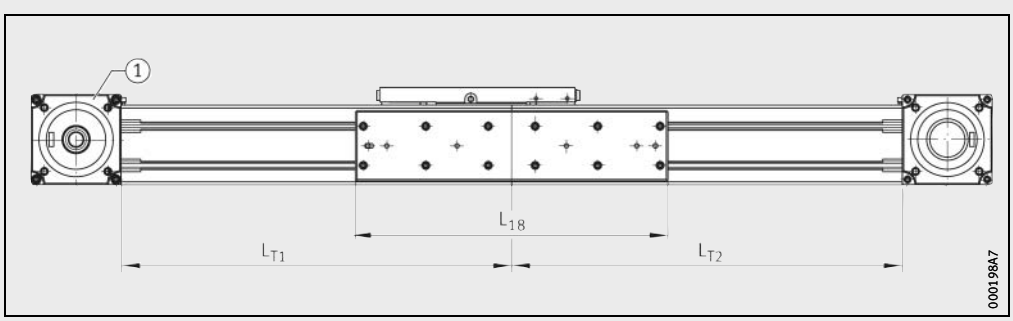

MKUSE25..-ZR-N-FA517.1, MKUSE25..-ZR-FA517.1 · Two segments
① 1)

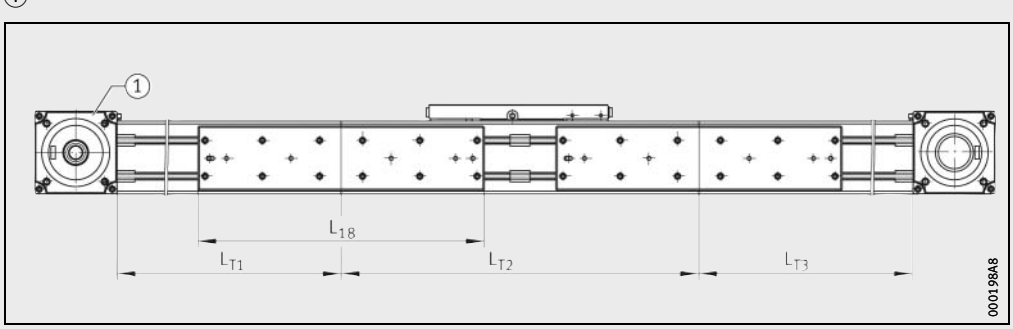

MKUSE25..-ZR-N-FA517.2, MKUSE25..-ZR-FA517.2 · Three segments
① 1)

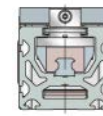

Actuators

Six-row linear recirculating ball bearing and guideway assembly
Toothed belt drive
Performance data

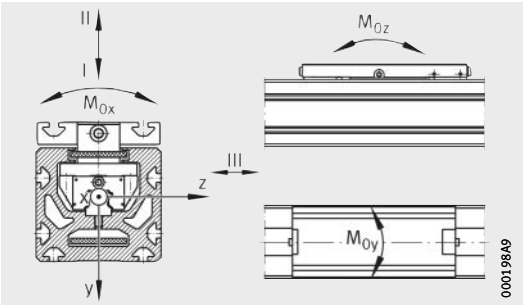

Load directions

Performance data

Designation	Carriage unit guidance system for each carriage unit								
	Basic load ratings per carriage unit						Permissible static moment ratings per carriage unit[1]		
	Load direction I Compressive load		Load direction II Tensile load		Load direction III Lateral load				
	dyn. C N	stat. C_0 N	dyn. C N	stat. C_0 N	dyn. C N	stat. C_0 N	$M_{0x\ per}$ Nm	$M_{0y\ per}$ Nm	$M_{0z\ per}$ Nm
MKUSE25-250-ZR (-W2) -N (-FA517)	45 400	134 000	37 200	86 000	34 600	92 000	1 070	2 875	2 725
MKUSE25-500-ZR (-W2) -N (-FA517)								11 500	11 050
MKUSE25-250-ZR (-W2) (-FA517)	45 400	134 000	37 200	86 000	34 600	92 000	1 070	2 875	2 725
MKUSE25-500-ZR (-W2) (-FA517)								11 500	11 050

1) The values are single loads and apply when the underside of the actuator is fully supported.
If there are several carriage units per actuator or combined loads are present, these must be reduced.

2) Maximum permissible drive torque on drive stud.

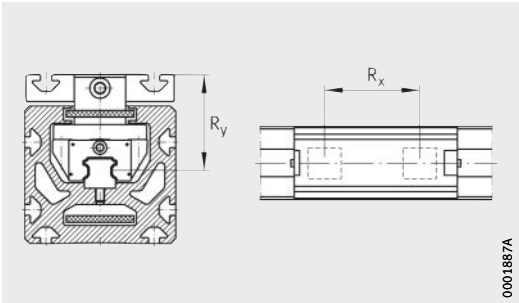

Mounting geometry of carriages

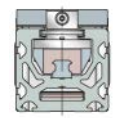

Carriage	Spacings		Moment of inertia of area of carrier profile		Drive					
					Feed per revolution	Maximum drive torque[2)]	Toothed belt			Toothed gears
							Type	Mass m	Permissible operating force	Mass moment of inertia
	R_x mm	R_y mm	I_y cm^4	I_z cm^4	mm	Nm		kg/m	N	$kg \cdot cm^2$
2×KWSE25	110 360	68,3	712	506	250	75	50AT10	0,315	1 880	14,7
2×KWSE25	110 360	68,3	712	506	250	75	50AT10	0,315	1 880	14,7

Actuators

Four-row linear recirculating ball bearing and guideway assembly
Toothed belt drive
Integrated planetary gearbox

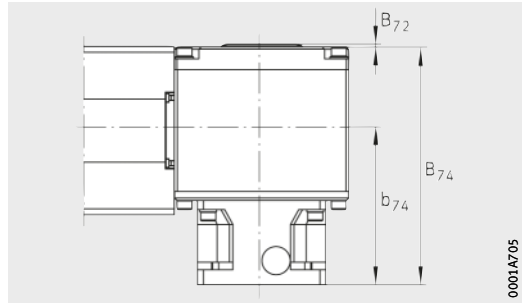

MKUVE25..-ZR-GTRI/..(-N)

Dimension table · Dimensions in mm

Designation	Dimensions of planetary gearbox											
	b_{74}	B_{72}	B_{74}	d_{87}	D_{85} F7 max.	D_{86} F10	D_{87} min.	D_{87} max.	H_{74}	T_{85} max.	T_{86}	T_{87}
MKUVE25-250-ZR-GTRI/4-N	112,5	2	168	8,5	19	100	102	130	115	50,5	4	16
MKUVE25-250-ZR-GTRI/8-N	102,5		158	6,6	14	80	85	100	85	40,5	3,5	10
MKUVE25-500-ZR-GTRI/4-N	112,5	2	168	8,5	19	100	102	130	115	50,5	4	16
MKUVE25-500-ZR-GTRI/8-N	102,5		158	6,6	14	80	85	100	85	40,5	3,5	10
MKUVE25-250-ZR-GTRI/4	112,5	2	168	8,5	19	100	102	130	115	50,5	4	16
MKUVE25-250-ZR-GTRI/8	102,5		158	6,6	14	80	85	100	85	40,5	3,5	10
MKUVE25-500-ZR-GTRI/4	112,5	2	168	8,5	19	100	102	130	115	50,5	4	16
MKUVE25-500-ZR-GTRI/8	102,5		158	6,6	14	80	85	100	85	40,5	3,5	10

Other geometrical features, see page 258 and page 259.

1) Maximum tightening torque M_A of clamping screw: M_A = 23,5 Nm.

2) Maximum tightening torque M_A of clamping screw: M_A = 17,3 Nm.

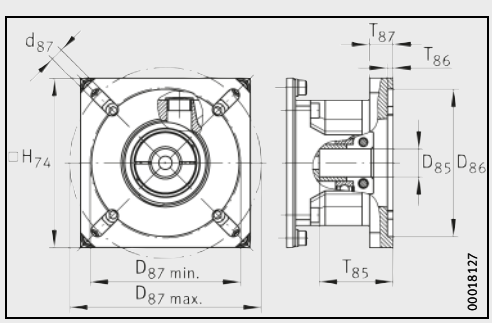

Planetary gearbox with reduction ratio i = 4 with drive flange[1)]

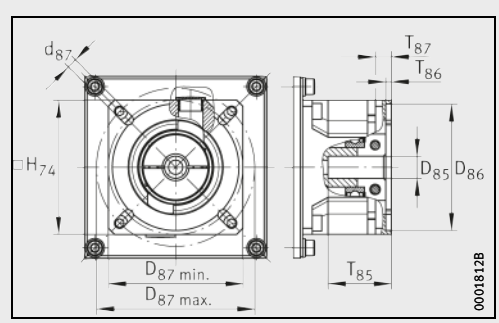

Planetary gearbox with reduction ratio i = 8 with drive flange[2)]

Actuators

Six-row linear recirculating ball bearing and guideway assembly
Toothed belt drive
Integrated planetary gearbox

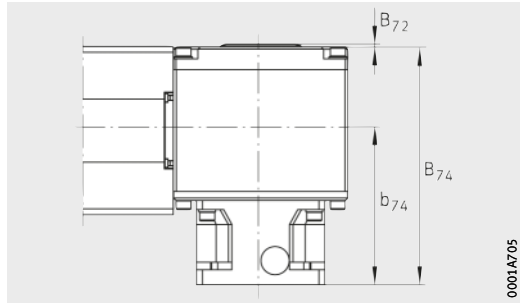

MKUSE25..-ZR-GTRI/..(-N)

Dimension table · Dimensions in mm

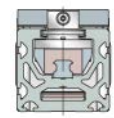

Designation	Dimensions of planetary gearbox											
	b_{74}	B_{72}	B_{74}	d_{87}	D_{85} F7 max.	D_{86} F10	D_{87} min.	D_{87} max.	H_{74}	T_{85} max.	T_{86}	T_{87}
MKUSE25-250-ZR-GTRI/4-N	112,5	2	168	8,5	19	100	102	130	115	50,5	4	16
MKUSE25-250-ZR-GTRI/8-N	102,5		158	6,6	14	80	85	100	85	40,5	3,5	10
MKUSE25-500-ZR-GTRI/4-N	112,5	2	168	8,5	19	100	102	130	115	50,5	4	16
MKUSE25-500-ZR-GTRI/8-N	102,5		158	6,6	14	80	85	100	85	40,5	3,5	10
MKUSE25-250-ZR-GTRI/4	112,5	2	168	8,5	19	100	102	130	115	50,5	4	16
MKUSE25-250-ZR-GTRI/8	102,5		158	6,6	14	80	85	100	85	40,5	3,5	10
MKUSE25-500-ZR-GTRI/4	112,5	2	168	8,5	19	100	102	130	115	50,5	4	16
MKUSE25-500-ZR-GTRI/8	102,5		158	6,6	14	80	85	100	85	40,5	3,5	10

Other geometrical features, see page 264 and page 265.

1) Maximum tightening torque M_A of clamping screw: M_A = 23,5 Nm.

2) Maximum tightening torque M_A of clamping screw: M_A = 17,3 Nm.

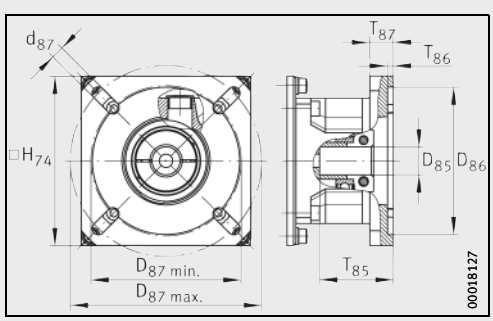

Planetary gearbox with reduction ratio i = 4 with drive flange[1)]

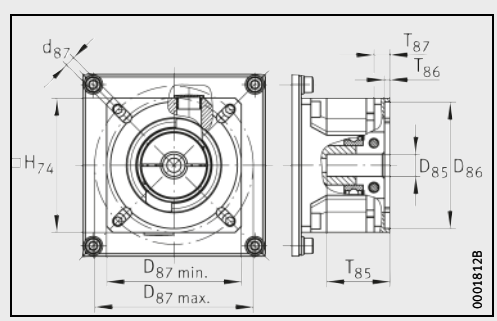

Planetary gearbox with reduction ratio i = 8 with drive flange[2)]

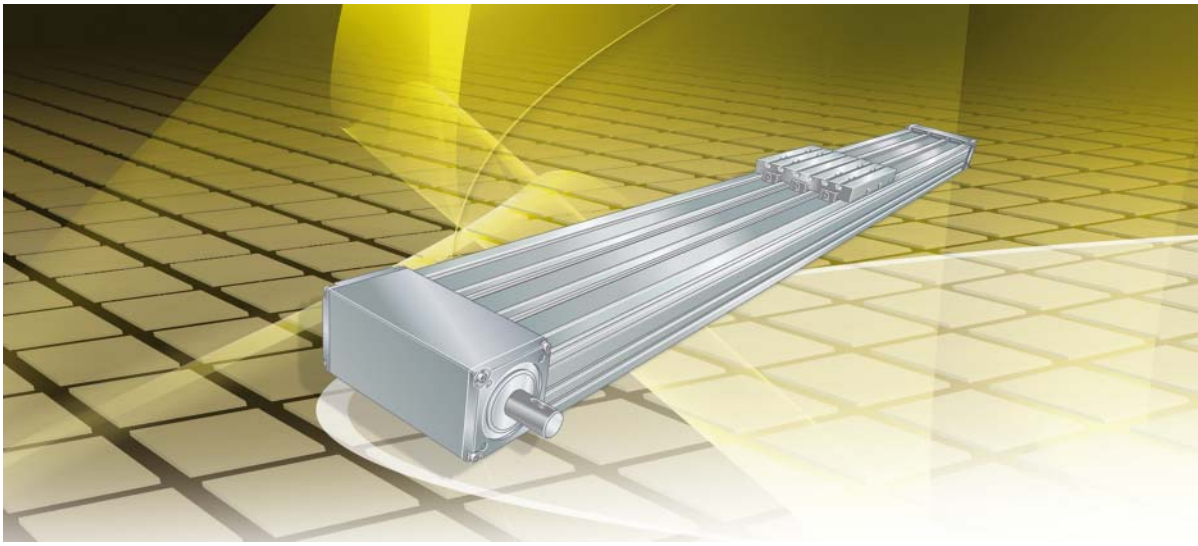

Tandem actuators with monorail guidance system and triple toothed belt drive

Tandem actuators with triple toothed belt drive

Tandem actuators with triple toothed belt drive

Basic design

Two parallel linear recirculating ball bearing and guideway assemblies

Triple toothed belt drive

MDKUVE..-3ZR

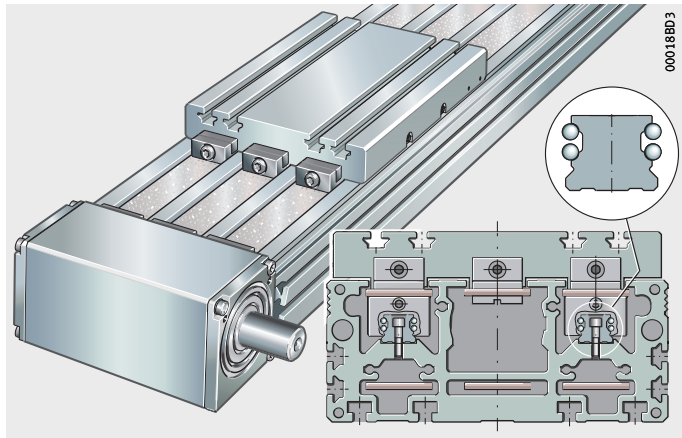

MDKUSE..-3ZR

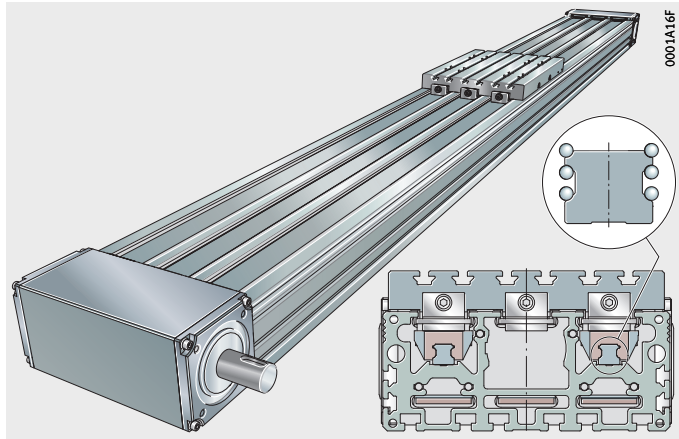

Tandem actuators with triple toothed belt drive

Features

Tandem actuators MDKUVE..-3ZR and MDKUSE..-3ZR comprise:

- a carriage unit available in various lengths
- a support rail
- two linear recirculating ball bearing and guideway assemblies arranged in parallel
- a triple toothed belt drive
- two return units (drive with three toothed belts).

Actuators MDKUVE..-3ZR and MDKUSE..-3ZR correspond substantially in their basic design and technical characteristics to the actuators MKUVE..-ZR and MKUSE..-3ZR. The following pages describe exclusively the differences, all other data on the features of tandem actuators matches the features of linear actuators, see page 211.

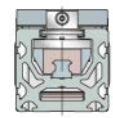

Tandem actuators are suitable for vertical applications, since the triple toothed belt arrangement allows very high operating forces.

Designs

Tandem actuators MDKUVE..-3ZR and MDKUSE..-3ZR are available in various designs, see table.

Available designs

Suffix	Description	Design
–	One driven carriage unit	Basic design
FA517	Multi-piece support rail	Standard
W2	Second, driven carriage unit	Standard
N	Fixing slots in carriage unit	Standard

Special designs

Special designs are available by agreement. Examples of these are tandem actuators:

- with more than two driven carriage units
- with two (or more) driven carriage units of different length
- with reinforced or antistatic toothed belt or toothed belt of high temperature design
- without drive
- with T-strips inserted in the T-slots of the support rail
- with an extended carriage unit
- with compressed air connections in the support rail
- with a drive stud of special dimensions
- with special machining.

Tandem actuators with triple toothed belt drive

Carriage unit

The carriage unit comprises a saddle plate made from anodised aluminium profile and the four carriages of the two linear recirculating ball bearing and guideway assemblies. The carriage unit is driven by means of three toothed belts arranged in parallel.

The carriage unit contains integral tensioners on both sides for the toothed belts. The 500 mm long carriage unit can support high moment forces. Available carriage unit lengths are shown in the table.

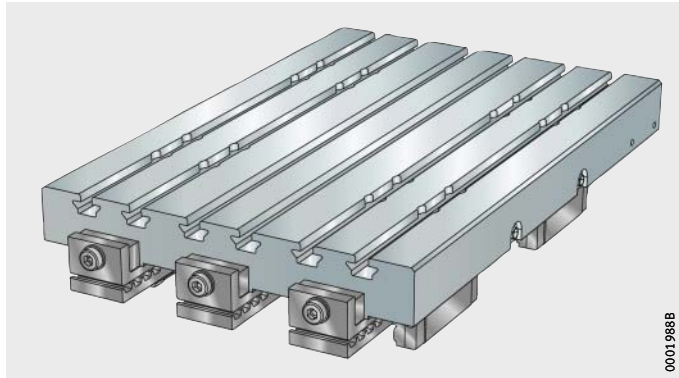

Figure 1
Carriage unit

Lengths of carriage units

Series	Carriage unit length mm	Suffix
MDKUVE15..-3ZR	240	240
	500	500
MDKUVE25..-3ZR MDKUSE25..-3ZR	365	365
	500	500
MDKUVE35..-3ZR	500	500

Location

The carriage units have T-slots for fixing to the adjacent construction.

Support rail unit

The support rail unit is a composite unit. It comprises a support rail made from anodised aluminium and two guideways arranged in parallel for the linear recirculating ball bearing and guideway assemblies. The guidance systems can be four-row linear recirculating ball bearing and guideway assemblies KUVE (actuator series MDKUVE..-3ZR) or six-row linear recirculating ball bearing and guideway assemblies KUSE (actuator series MDKUSE..-3ZR). The linear recirculating ball bearing and guideway assemblies are preloaded clearance-free and run without stick-slip.

Since the support rail has very high bending rigidity, it can be used to span large gaps.

Support rail length and segments

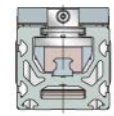

The maximum length of a single-piece support rail is 6 000 mm. The support rail segments are connected at their butt joints by means of an aluminium plate screw mounted to each side of the support rail and secured by dowel pins. The minimum length of a segment of a multi-piece support rail is 1 000 mm.

One return unit and the carriage unit are premounted on the first support rail segment. The other support rail segments with two aluminium plates screwed to each side of the support rail and secured by dowel pins, the second return unit and the toothed belt are supplied as individual components. These are fitted on site.

Return unit

The return units comprise a housing made from anodised aluminium profile, two covers and a shaft unit, *Figure 2*.
The shaft is supported on both sides by tapered roller bearings lubricated for life. The toothed belt is wrapped in the return unit by means of a gear mounted on the shaft. The return zone is protected against contamination by means of wiper brushes.

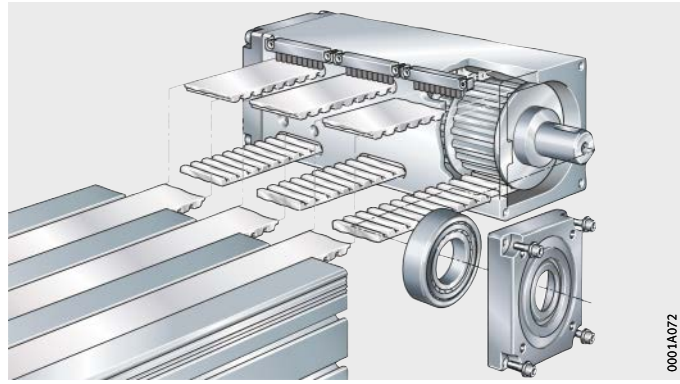

Figure 2
Return unit
for triple toothed belt drive

Toothed belt

The tandem actuators are fitted with reinforced toothed belts that allows the transmission of high tensile forces with a long rating life. These toothed belts are tensioned by means of tensioning units in the carriage units.

Tandem actuators with triple toothed belt drive

Drive

The actuators are available without a drive shaft as well as with a drive shaft on the left side, right side or passing through the unit, see table.

Possible combinations and drive variants, see also *Figure 3*.

Suffixes

Drive variants	Suffix
Drive shaft on left side	AL
Drive shaft on right side	AR
No drive shaft	OZ
Drive shaft on both sides (right and left)	RL

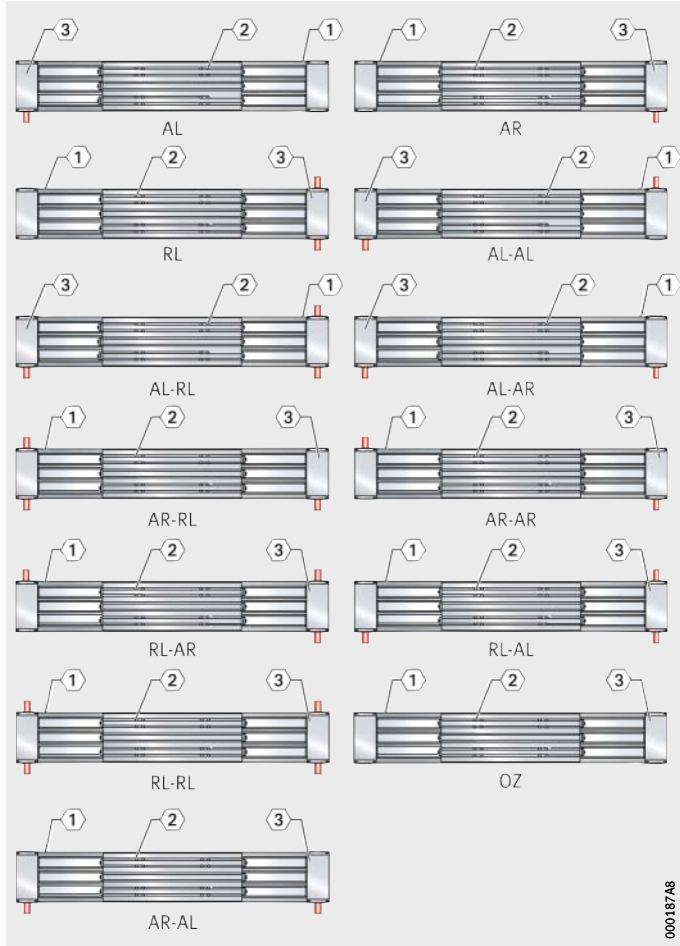

(1) Filling slot for T-nuts and T-bolts on single-piece support rails
(2) Carriage unit
(3) Drive side

Figure 3
Drive variants – tandem actuators
MDKUVE..-3ZR
MDKUSE..-3ZR

Proven drive combinations

The combination of the necessary drive components for vertical and horizontal applications as a function of the mass to be moved, the acceleration and the travel velocity of carriage units is shown on page 681.

The bearing load in the actuators must be checked; it is not taken into consideration in dimensioning of the motor.
For vertical mounting, motors with a holding brake must be used.

If different loading and kinematic criteria apply, see pages starting page 684, the least favourable operating conditions should be used for calculation of the drive motor and design of the gearbox, coupling and servo controller.

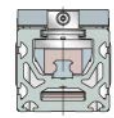

Tandem actuators with triple toothed belt drive

Mechanical accessories

A large number of accessories are available for tandem actuators with monorail guidance system and triple toothed belt drive.
The allocation of accessories, see table, is valid if the data match the Technical principles, page 13, and the Design and safety guidelines, page 282.

Allocation

Linear actuator / size	MDKUVE..-3ZR-N	15	25	35
	MDKUSE..-3ZR-N	–	25	–
Fixing brackets, see page 811				
WKL-48×48×35		①	①	–
WKL-65×65×30-N		①	①	–
WKL-65×65×35		①	①	–
WKL-65×65×35-N		①	①	–
WKL-90×90×35-N		①	①	①
WKL-98×98×35		–	①	–
Clamping lugs, see page 829				
SPPR-23×30		①	①	–
SPPR-28×30		①	①	–
SPPR-31×30		–	–	①
SPPR-34×36		–	–	①
T-nuts, see page 835				
MU-DIN 508 M4×5		①	–	–
MU-M3×5 (similar to DIN 508)		①	–	–
MU-DIN 508 M6×8		①	①	–
MU-M4×8 (similar to DIN 508)		①	①	–
MU-DIN 508 M8×10		–	①	①
MU-M6×10 (similar to DIN 508)		–	①	①
T-nuts made from corrosion-resistant steel, see page 835				
MU-DIN 508 M4×5-RB		①	–	–
MU-DIN 508 M6×8-RB		①	①	–
MU-DIN 508 M8×10-RB		–	①	①
T-bolts, see page 835				
SHR-DIN 787 M4×5×25		①	–	–
SHR DIN 787-M8×8×32		①	①	–
SHR DIN 787-M10×10×40		–	①	①
Rotatable T-nuts, see page 836				
MU-M3×5-RHOMBUS		①	–	–
MU-M4×8-RHOMBUS		①	①	–
MU-M6×8-RHOMBUS		①	①	–
MU-M8×10-RHOMBUS		–	①	①

① Suitable.

Allocation
(continued)

Linear actuator / size	MDKUVE..-3ZR-N	15	25	35
	MDKUSE..-3ZR-N	–	25	–
Positionable T-nuts, see page 836				
MU-M4×5-POS		①	–	–
MU-M5×5-POS		①	–	–
MU-M4×8-POS		①	①	–
MU-M5×8-POS		①	①	–
MU-M6×8-POS		①	①	–
MU-M8×8-POS		①	①	–
Hexagon nuts, see page 837				
MU-ISO 4032 M5		①	–	–
MU-ISO 4032 M8		①	①	–
MU-ISO 4032 M10		–	①	①
T-strips, see table T-strips LEIS				
LEIS-M4/5-T-NUT-SB-ST		①	–	–
LEIS-M4/5-T-NUT-HR-ALU		②	–	–
LEIS-M6/8-T-NUT-SB-ST		①	①	–
LEIS-M8/8-T-NUT-SB-ST		①	①	–
LEIS-M6/8-T-NUT-HR-ST		②	②	–
LEIS-M6/8-T-NUT-HR-ALU		②	②	–
LEIS-M4/5-T-NUT-ST		②	–	–
LEIS-M6/8-T-NUT-ST		②	②	–
LEIS-M8/10-T-NUT-ST		–	②	②
Connector sets (parallel connectors), see page 838				
VBS-PVB8		①	①	–
VBS-PVB10		–	①	①
VBS-PVB8/10		①	①	①
Slot closing strips, see page 838				
NAD-5×5,7		①	–	–
NAD-8×4,5		①	①	–
NAD-8×11,5		①	①	–
NAD-10×6,5		–	①	①

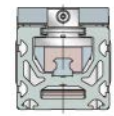

① Suitable.
② Suitable and T-strips must already have been inserted at the time of despatch.

Tandem actuators with triple toothed belt drive

Design and safety guidelines

Load carrying capacity and load safety factor

The load carrying capacities and load safety factors to be observed differ as a function of the mounting position, see section Technical principles, page 12 and Product preselection matrix, page 64.

Deflection

The deflection of tandem actuators is essentially dependent on the support spacing, the rigidity of the support rail, the adjacent construction and the bearing arrangement. As the rigidity of these components increases, the deflection of the actuators is reduced.

Diagrams

The diagram values are determined for a bearing arrangement or clamping which is in theory infinitely rigid and are subdivided into locating/non-locating and locating/locating bearing arrangements, starting *Figure 8*, page 284.

The deflection of the support rail is valid under the following conditions:

- support rail unit comprising carrier profile and guideway
- support spacings up to 6 000 mm
- introduction of the load at the centre of the carriage unit if this is at the centre point between the bearing points.

The diagrams represent guide values only for the deflection of the support rail, starting *Figure 4*, page 283. The effect of deflection on the rating life of the guidance system is not taken into consideration.

It is not possible to provide deflection diagrams for actuators with two carriage units since there will be different spacings between the carriage units. In such cases, please consult the Schaeffler engineering service.

MDKUVE15..-3ZR

Locating/non-locating bearing arrangement
Δ_{vy} = deflection
l = support spacing

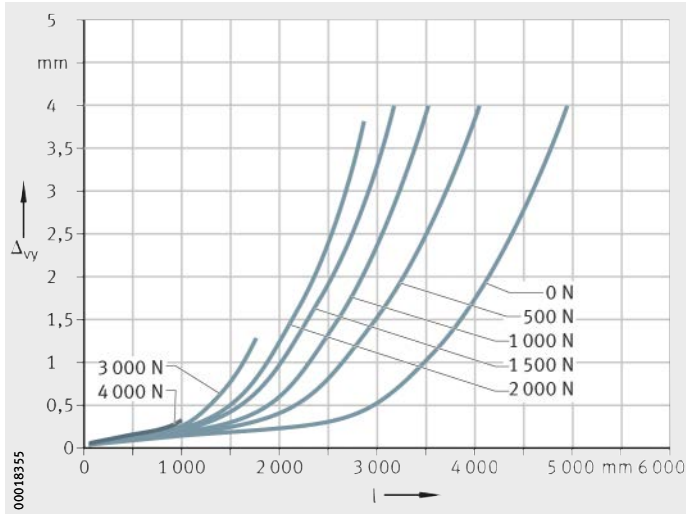

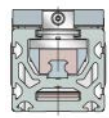

Figure 4
Deflection about the z axis

MDKUVE15..-3ZR

Locating/locating bearing arrangement
Δ_{vy} = deflection
l = support spacing

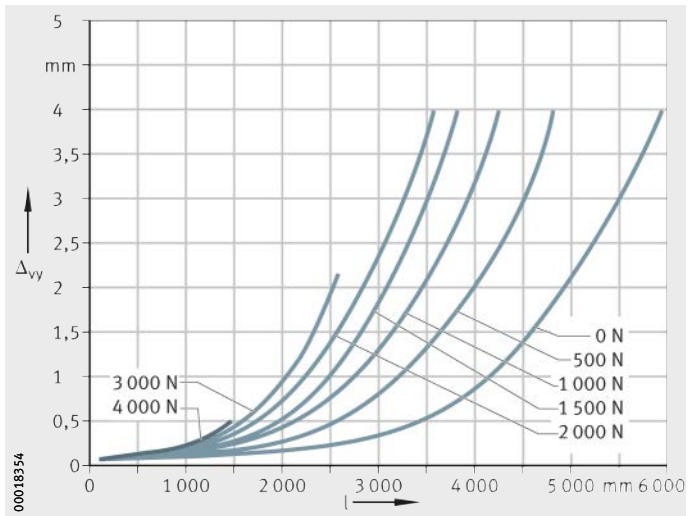

Figure 5
Deflection about the z axis

MDKUVE15..-3ZR

Locating/non-locating bearing arrangement
Δ_{vz} = deflection
l = support spacing

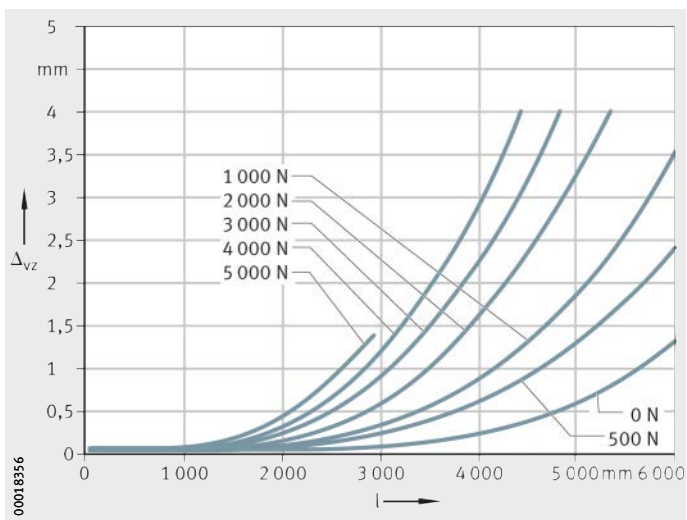

Figure 6
Deflection about the y axis

MDKUVE15..-3ZR

Locating/locating bearing arrangement
Δ_{vz} = deflection
l = support spacing

Figure 7
Deflection about the y axis

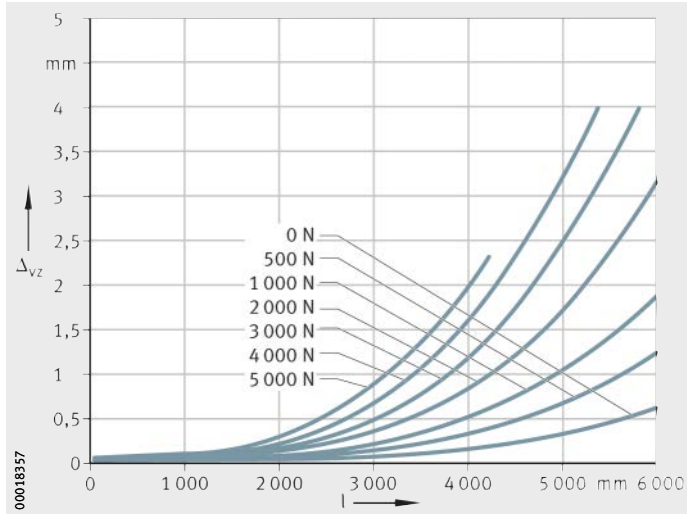

MDKUVE25..-3ZR
MDKUSE25..-3ZR

Locating/non-locating bearing arrangement
Δ_{vy} = deflection
l = support spacing

Figure 8
Deflection about the z axis

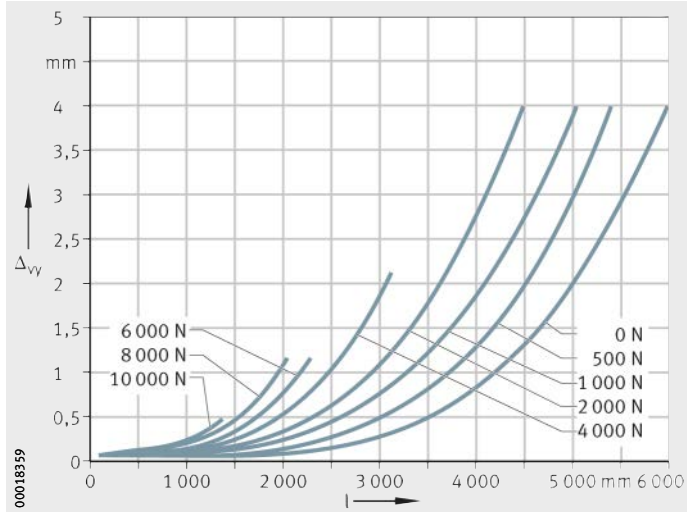

MDKUVE25..-3ZR
MDKUSE25..-3ZR

Locating/locating bearing arrangement
Δ_{vy} = deflection
l = support spacing

Figure 9
Deflection about the z axis

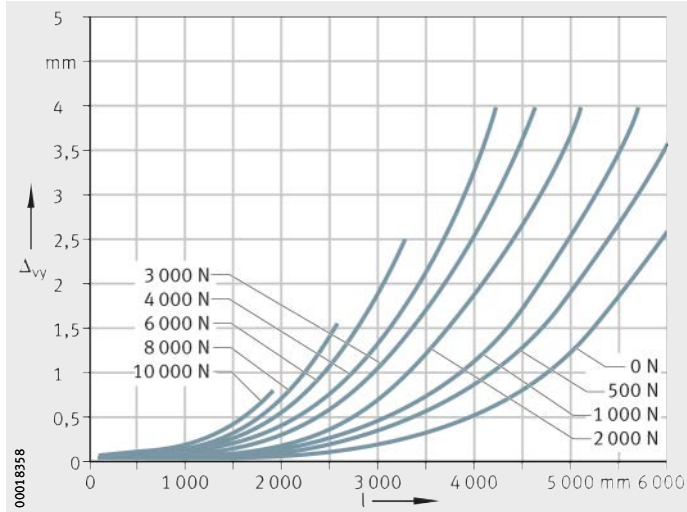

MDKUVE25..-3ZR
MDKUSE25..-3ZR

Locating/non-locating bearing arrangement
Δ_{vz} = deflection
l = support spacing

Figure 10
Deflection about the y axis

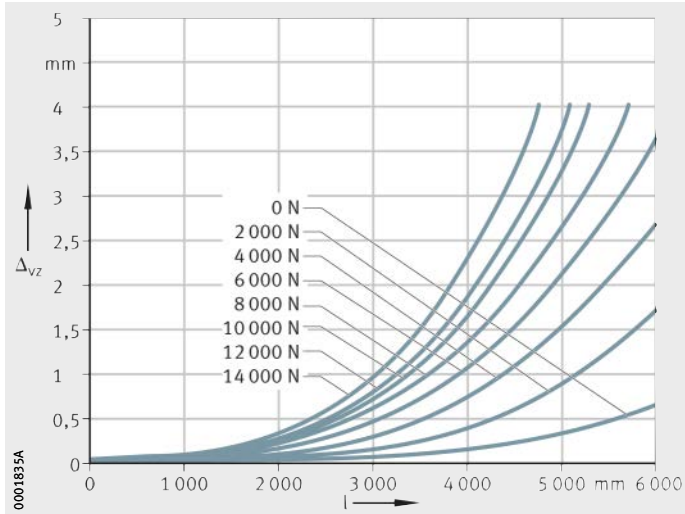

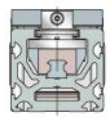

MDKUVE25..-3ZR
MDKUSE25..-3ZR

Locating/locating bearing arrangement
Δ_{vz} = deflection
l = support spacing

Figure 11
Deflection about the y axis

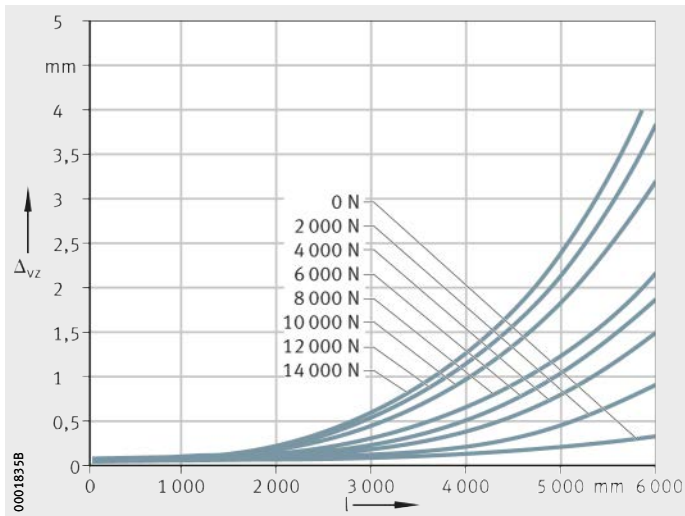

MDKUVE35..-3ZR

Locating/non-locating bearing arrangement
Δ_{vy} = deflection
l = support spacing

Figure 12
Deflection about the z axis

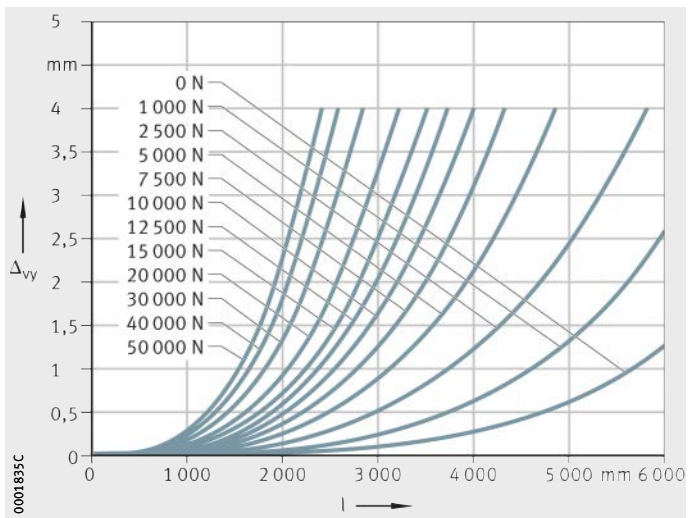

MDKUVE35..-3ZR

Locating/locating bearing arrangement
Δ_{vy} = deflection
l = support spacing

Figure 13
Deflection about the z axis

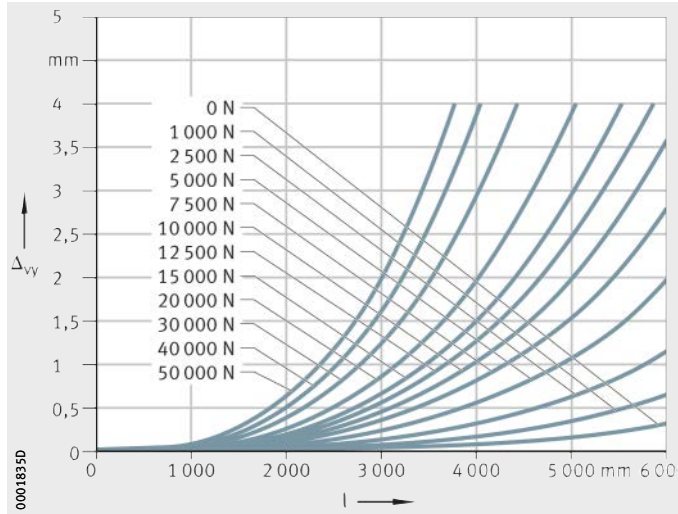

MDKUVE35..-3ZR

Locating/non-locating bearing arrangement
Δ_{vz} = deflection
l = support spacing

Figure 14
Deflection about the y axis

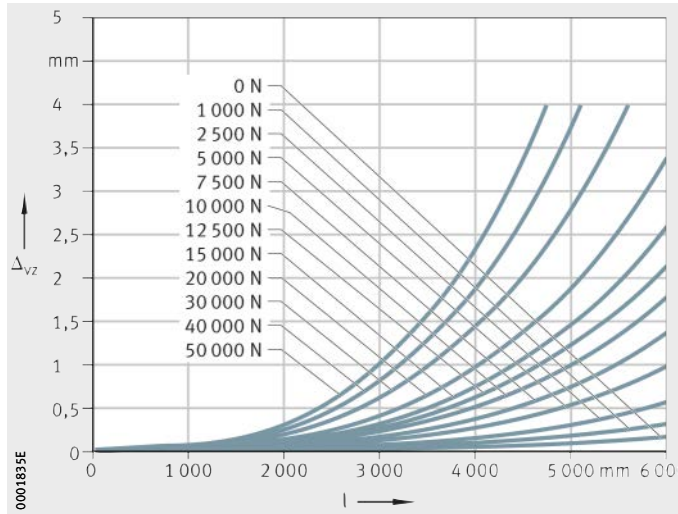

MDKUVE35..-3ZR

Locating/locating bearing arrangement
Δ_{vz} = deflection
l = support spacing

Figure 15
Deflection about the y axis

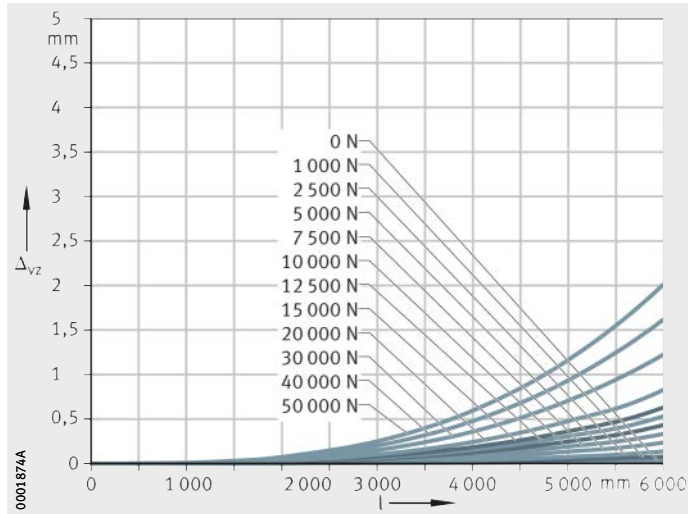

Idling drive torque

The idling drive torque M_0 of tandem actuators is calculated for a constant velocity and for a horizontal (M_{0h}) or vertical (M_{0v}) mounting position, starting *Figure 16*. The idling drive torque increases with increasing travel velocity. The data in the diagrams are maximum values.

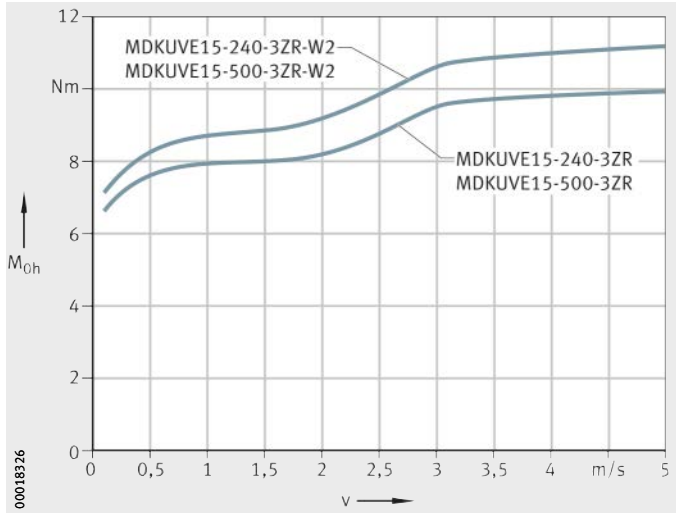

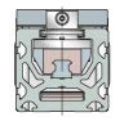

MDKUVE15..-3ZR
MDKUVE15..-3ZR..-W2

v = travel velocity of carriage unit
M_{0h} = idling drive torque

Figure 16
Idling drive torque
Horizontal mounting position

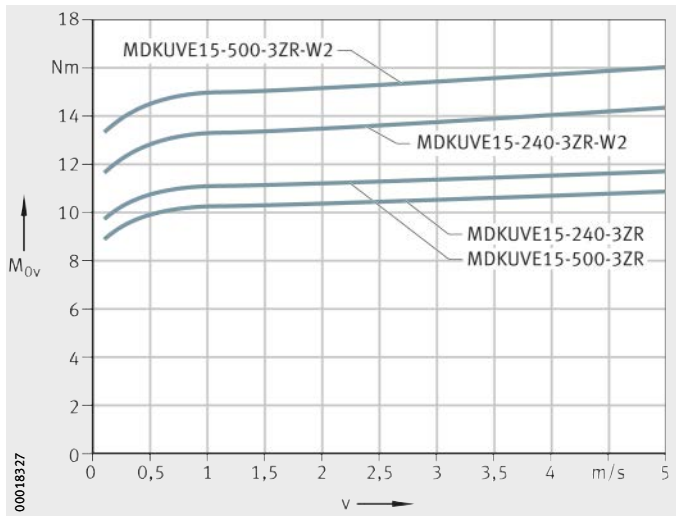

MDKUVE15..-3ZR
MDKUVE15..-3ZR..-W2

v = travel velocity of carriage unit
M_{0v} = idling drive torque

Figure 17
Idling drive torque
Vertical mounting position

MDKUVE25..-3ZR
MDKUVE25..-3ZR..-W2

v = travel velocity of carriage unit
M_{0h} = idling drive torque

Figure 18
Idling drive torque
Horizontal mounting position

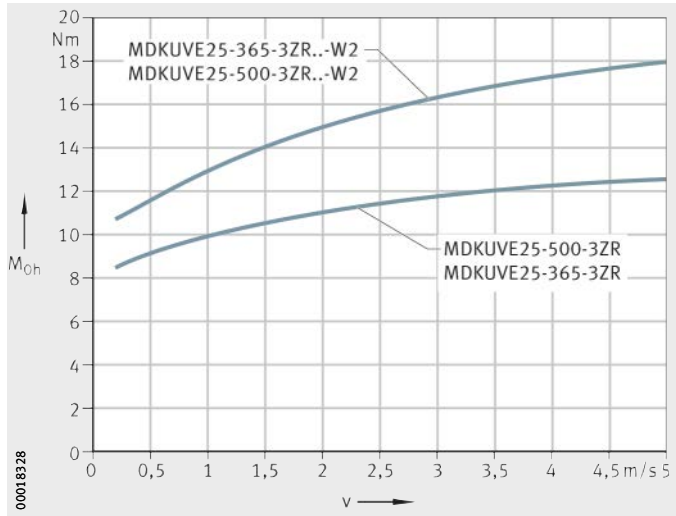

MDKUVE25..-3ZR
MDKUVE25..-3ZR..-W2

v = travel velocity of carriage unit
M_{0v} = idling drive torque

Figure 19
Idling drive torque
Vertical mounting position

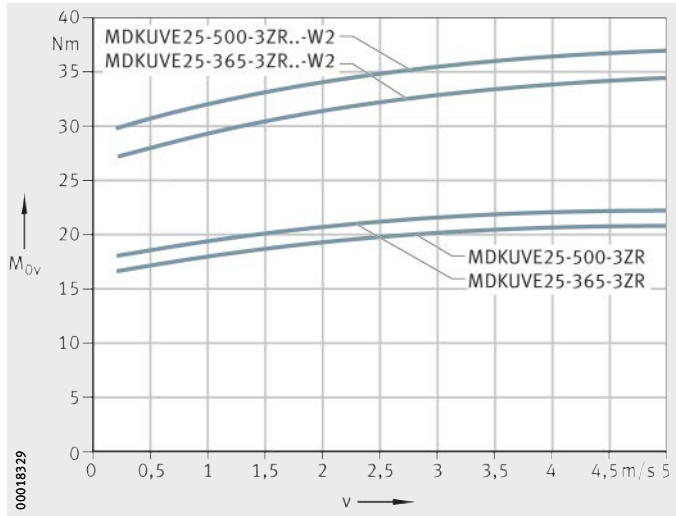

MDKUSE25..-3ZR
MDKUSE25..-3ZR..-W2

v = travel velocity of carriage unit
M_{0h} = idling drive torque

Figure 20
Idling drive torque
Horizontal mounting position

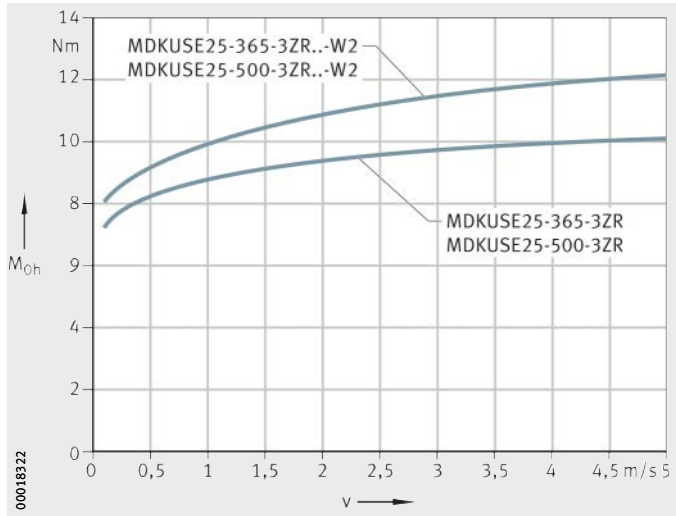

MDKUSE25..-3ZR
MDKUSE25..-3ZR..-W2

v = travel velocity of carriage unit
M_{0v} = idling drive torque

Figure 21
Idling drive torque
Vertical mounting position

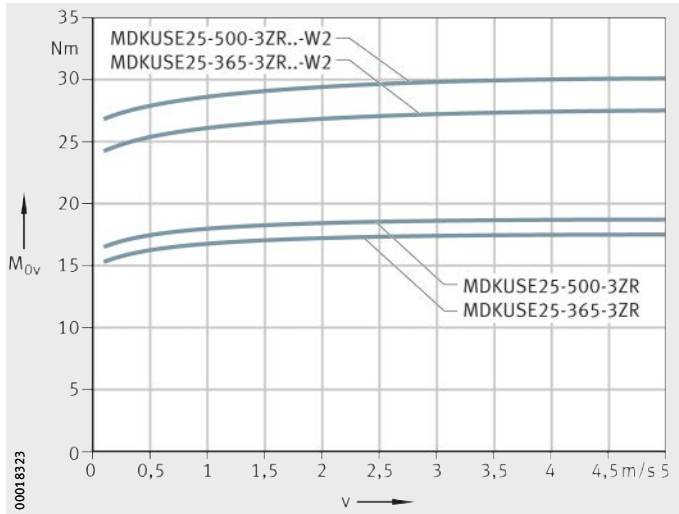

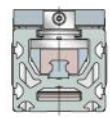

MDKUVE35..-3ZR
MDKUV35..-3ZR..-W2

v = travel velocity of carriage unit
M_{0h} = idling drive torque

Figure 22
Idling drive torque
Horizontal mounting position

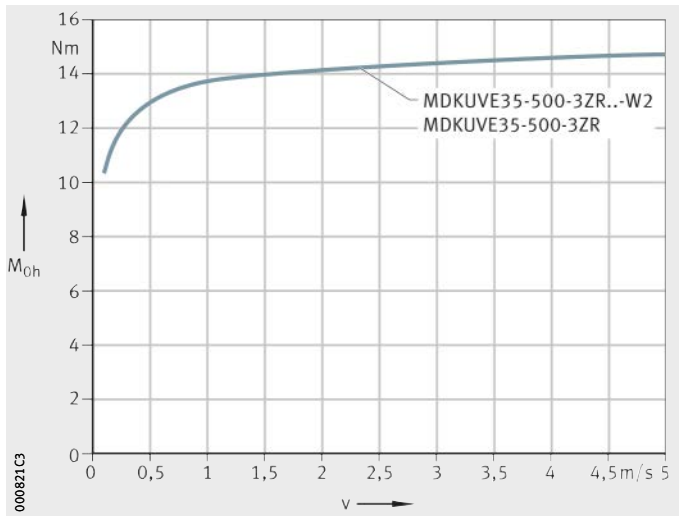

MDKUVE35..-3ZR
MDKUVE35..-3ZR..-W2

v = travel velocity of carriage unit
M_{0v} = idling drive torque

Figure 23
Idling drive torque
Vertical mounting position

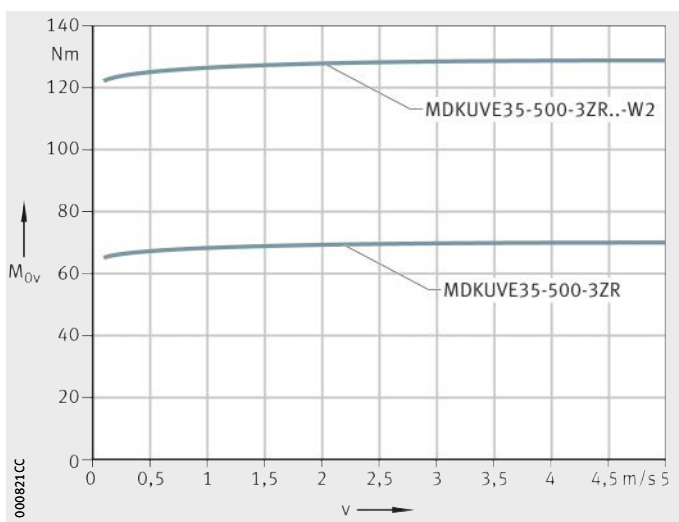

Tandem actuators with triple toothed belt drive

Length calculation of tandem actuators

The length calculation of tandem actuators is based on the required effective stroke length N_H. The effective stroke length N_H must be increased by the addition of safety spacing values on both sides of the travel distance.

The total length L_{tot} of the actuator is determined from the support rail length L_2 and the lengths of the return units L_4. If two carriage units are present, both carriage units lengths L_1 and the spacing L_{x1} must be taken into consideration.

Parameters for length calculation

G_H mm
Total stroke length

N_H mm
Effective stroke length

S mm
Safety spacing, for minimum values see table, page 291

L mm
Length of carriage plate

L_1 mm
Total length of carriage unit

L_2 mm
Length of support rail

L_4 mm
Length of return unit

L_6 mm
Length of wiper brushes

L_{tot} mm
Total length of actuator

L_{x1} mm
Spacing between two carriage units.

Total stroke length G_H

The total stroke length G_H is determined from the required effective stroke length and the safety spacings, which must be at least 85 mm.

$$G_H = N_H + 2 \cdot S$$

Single-piece and multi-piece support rails

The maximum length of single-piece support rails is 6 000 mm. Longer support rails are supplied in units comprising several segments. The maximum length of a multi-piece support rail is 18 000 mm. The minimum length of a support rail segment is 1 000 mm. A maximum of three support rail segments is permissible.

Spacing L_{x1} between carriage units

The minimum spacing for L_{x1} between two carriage units is 100 mm.

Total length L_{tot} and support rail length L_2

The following equations are designed for one and two carriage units. The parameters and their position can be found in *Figure 24* and *Figure 25* as well as in the table. If more than two carriage units are present, please consult us.

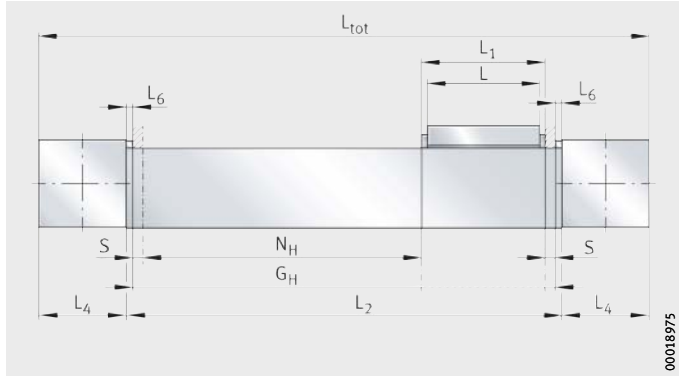

Figure 24
Length parameters for one carriage unit

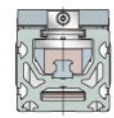

One carriage unit

$$L_2 = G_H + L_1 + 2 \cdot L_6$$

Total length

$$L_{tot} = L_2 + 2 \cdot L_4$$

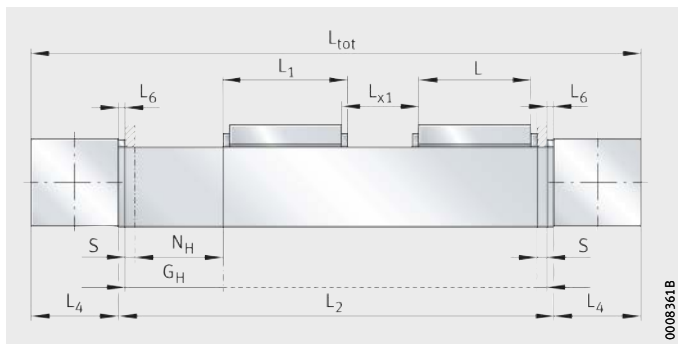

Figure 25
Length parameters for two carriage units

Two carriage units

$$L_2 = G_H + L + L_1 + L_{x1} + 2 \cdot L_6$$

Total length

$$L_{tot} = L_2 + 2 \cdot L_4$$

Length parameters

Designation	L mm	L_1 mm	L_4 mm	L_6 mm	S mm
MDKUVE15-240-3ZR-N	240	282	80	6	85
MDKUVE15-500-3ZR-N	500	542			
MDKUVE25-365-3ZR-N	365	405	115,5	6	85
MDKUVE25-500-3ZR-N	500	540			
MDKUSE25-365-3ZR-N	365	405	115,5	6	85
MDKUSE25-500-3ZR-N	500	540			
MDKUVE35-500-3ZR-N	500	538	170	10	85

Mass calculation

The total mass of an actuator is calculated from the mass of the actuator without a carriage unit, the carriage unit and the special design: multi-piece support rail (FA517) and second carriage unit (W2), *Figure 26*. Insert the values from the table in the following equation. The values m_{LAW} and m_{BOL} are mandatory.

$$m_{tot} = m_{LAW} + m_{BOL} + m_1 + m_3$$

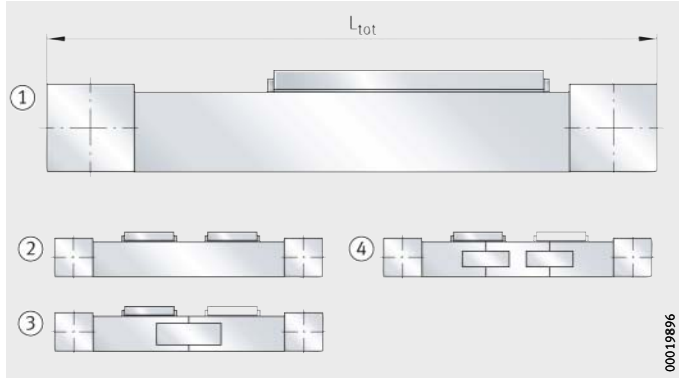

① Basic design
② Second carriage unit (W2)
③ Two-piece support rail (FA517.1)
④ Three-piece support rail (FA517.2)

Figure 26
Basic and additional designs

Values for mass calculation

Designation	Mass	
	Carriage unit m_{LAW} ≈kg	Actuator without carriage unit m_{BOL} ≈kg
MDKUVE15-240-3ZR..-N	4,11	$(L_{tot} - 160) \times 0{,}016\,2 + 7{,}85$
MDKUVE15-500-3ZR..-N	7,82	
MDKUVE25-365-3ZR..-N	12,81	$(L_{tot} - 231) \times 0{,}032\,2 + 18{,}76$
MDKUVE25-500-3ZR..-N	16	
MDKUSE25-365-3ZR..-N	12,65	
MDKUSE25-500-3ZR..-N	15,84	
MDKUVE35-500-3ZR..-N	38,49	$(L_{tot} - 340) \times 0{,}077\,3 + 97{,}72$

Values for mass calculation (continued)

Designation	Mass Design		
	m_1		m_3
	FA517.1 ≈kg	FA517.2 ≈kg	W2 ≈kg
MDKUVE15-240-3ZR..-N	1,84	3,69	4,11
MDKUVE15-500-3ZR..-N			7,82
MDKUVE25-365-3ZR..-N		3,68	12,81
MDKUVE25-500-3ZR..-N			16
MDKUSE25-365-3ZR..-N			12,65
MDKUSE25-500-3ZR..-N			15,84
MDKUVE35-500-3ZR..-N	11,5	23	36,89

Lubrication

The information on lubrication of tandem actuators matches the information on the lubrication of linear actuators, see page 236. The only differences are in the relubrication quantities and relubrication points.

Relubrication quantities

Relubrication should be carried out wherever possible with several partial quantities at various times instead of the complete quantity at the time of the relubrication interval. Relubrication quantities, see section Actuators with monorail guidance system, page 54.

Grease quantities

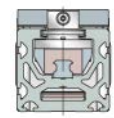

Tandem actuator	Relubrication quantity per carriage	
	Drive side, per lubrication nipple and per longitudinal face ≈g	Non-locating bearing side, per lubrication nipple and per longitudinal face ≈g
MDKUVE15-240-3ZR MDKUVE15-500-3ZR	2,5 to 3	2,5 to 3
MDKUVE25-365-3ZR MDKUVE25-500-3ZR	3 to 5,5	3 to 5,5
MDKUSE25-365-3ZR MDKUSE25-500-3ZR	6 to 10	6 to 10
MDKUVE35-500-3ZR	6,5 to 10	6,5 to 10

Relubrication points

Each carriage unit in a tandem actuator with linear recirculating ball bearing and guideway assembly and toothed belt drive is equipped with four funnel type lubrication nipples to DIN 3405-A M6, *Figure 27* and *Figure 28*. The tandem actuator MDKUVE15-240..-3ZR can be relubricated via two funnel type lubrication nipples (one per side). It can be lubricated from either the left or right side.

MDKUVE..-ZR
MDKUSE..-ZR

① Funnel type lubrication nipple DIN 3405-A M6

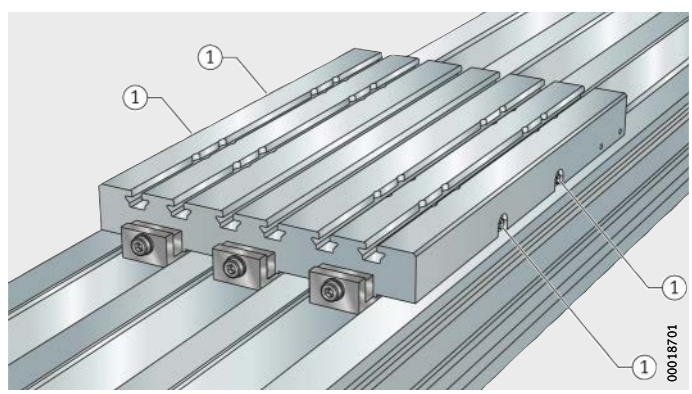

Figure 27
Lubrication points

MDKUVE..-ZR
MDKUSE..-ZR

① Funnel type lubrication nipple DIN 3405-A M6

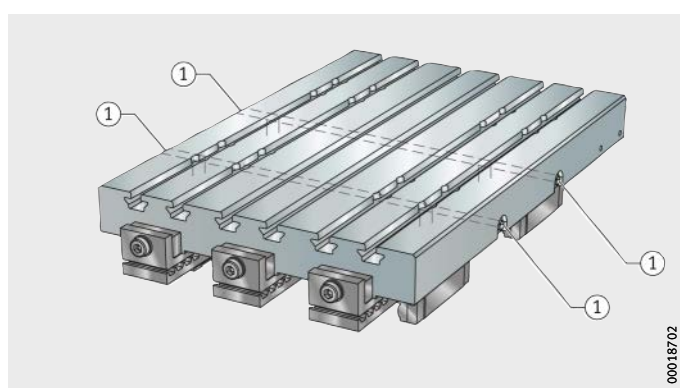

Figure 28
Lubrication ducts in the carriage unit

During lubrication of actuators, all lubrication points on one longitudinal side of a carriage unit must always be provided with lubricant.

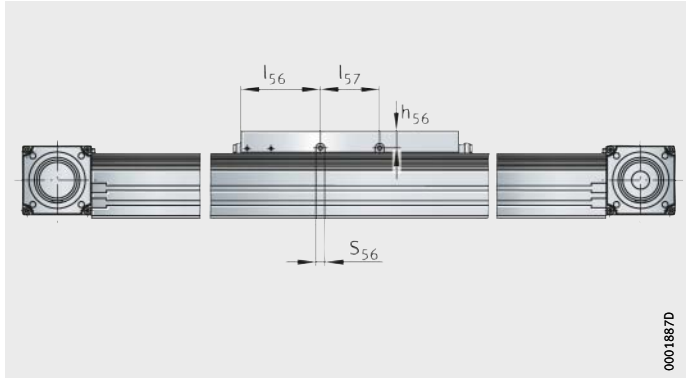

Figure 29
Lubrication points

Position of relubrication points

Designation	Mounting dimensions			
	S_{56} mm	h_{56} mm	l_{56} mm	l_{57} mm
MDKUVE15-240..-3ZR	15	20	118	–
MDKUVE15-500..-3ZR			124,5	251
MDKUVE25-365..-3ZR	15	28	132,8	99,4
MDKUVE25-500..-3ZR			140,2	219,5
MDKUSE25-365..-3ZR	15	28	132,8	99,4
MDKUSE25-500..-3ZR			140,2	219,5
MDKUVE35-500..-3ZR	36	30	182,5	135

T-slots

The T-slots in the support rail and the carriage unit are designed for T-bolts according to DIN 787 and T-nuts according to DIN 508, *Figure 30*. T-nuts and T-bolts are inserted using filling slots in the support rail.

① T-slot size 10
② T-slot size 8
③ T-slot size 5
④ T-slot size 8,1

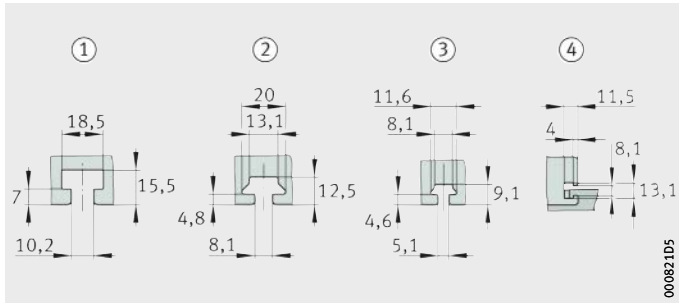

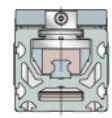

Figure 30
Sizes of T-slots
in support rail and carriage unit

Dimensions of T-slots

Designation	Support rail		Carriage unit	
	Lateral	Bottom	Top	Lateral
MDKUVE15..-3ZR	③	②	②	–
MDKUVE15..-3ZR	②			
MDKUVE25..-3ZR	②	①	②	–
MDKUSE25..-3ZR				
MDKUVE35..-3ZR	①	①	①	④

Filling openings

The filling openings are located on three sides of the tandem actuator: on both sides and underneath, *Figure 31* and table.

① Lower filling slots
② Lateral filling slots

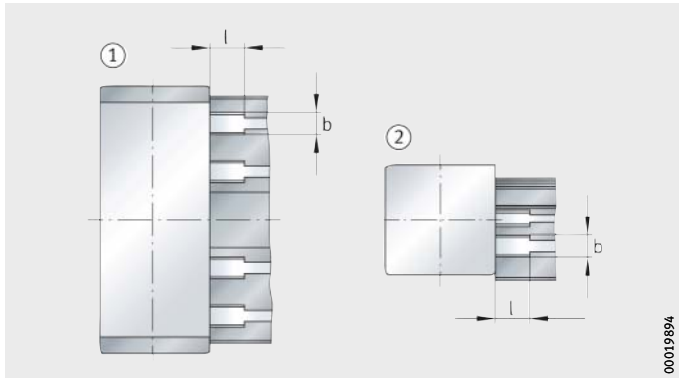

Figure 31
Filling opening in the support rail

Dimensions of filling openings in support rails

Designation	Filling opening for lateral T-slots			Filling opening for lower T-slots		
	T-slot size mm	b mm	l mm	T-slot size mm	b mm	l mm
MDKUVE15..-3ZR	5	12	25	8	16	25
MDKUVE15..-3ZR	8	16				
MDKUVE25..-3ZR	8	16	25	10	18,5	35
MDKUSE25..-3ZR						
MDKUVE35..-3ZR	10	18,5	35	10	18,5	35

Connectors for switching tags

Switching tags can be screw mounted to the carriage unit in order to activate switches in the adjacent construction. The position and size are dependent on the size, *Figure 32* and table.

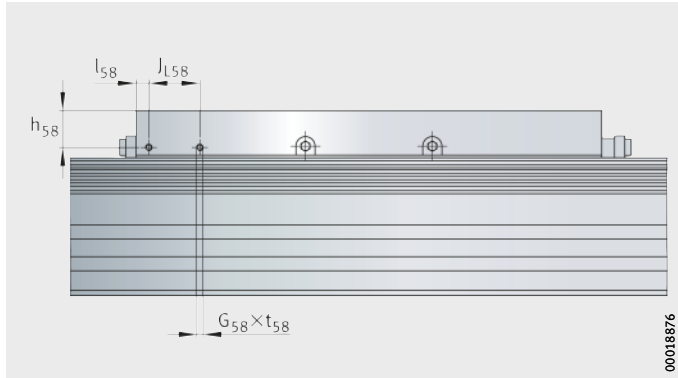

Figure 32
Connectors for switching tags on the carriage unit

Mounting dimensions for switching tags

Series Actuator	Mounting dimensions				
	J_{l58} mm	l_{58} mm	h_{58} mm	G_{58} mm	$t_{58\ max}$ mm
MDKUVE15-240-3ZR	40	10	23,3	M5	12
MDKUVE15-500-3ZR					
MDKUVE25-365-3ZR	40	10	29	M5	12
MDKUVE25-500-3ZR					
MDKUSE25-365-3ZR	40	10	29	M5	12
MDKUSE25-500-3ZR					
MDKUVE35-500-3ZR[1)]	–	–	28	–	–

[1)] Carriage unit with T-slots on both sides.

Accuracy

Length tolerances

The information on the length tolerance of tandem actuators matches the information on the length tolerance of linear actuators, see page 245.

Straightness of support rail

The information on the straightness of the support rails of tandem actuators matches the information on the straightness of the support rails of linear actuators, see page 246.

Values for the straightness tolerances of support rails of tandem actuators, see table.

Tolerances

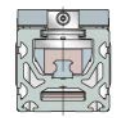

Length L_2 of support rail	MDKUVE15..-3ZR			MDKUSE25..-3ZR MDKUVE25..-3ZR			MDKUVE35..-3ZR		
mm	t_2 mm	t_3 mm	Torsion mm	t_2 mm	t_3 mm	Torsion mm	t_2 mm	t_3 mm	Torsion mm
$L_2 \leqq 1000$	0,6	0,5	0,5	0,8	0,7	0,5	0,8	0,7	0,8
$1000 < L_2 \leqq 2000$	1	0,7	1	1,2	0,9	1	1,6	1,4	1,2
$2000 < L_2 \leqq 3000$	1,4	0,9	1,5	1,6	1,1	1,5	2,4	2,1	2
$3000 < L_2 \leqq 4000$	1,7	1,2	2	1,9	1,4	2	3,2	2,8	2,4
$4000 < L_2 \leqq 5000$	2,1	1,4	2,5	2,3	1,6	2,5	4	3,5	2,8
$5000 < L_2 \leqq 6000$	2,7	1,7	3	2,9	1,9	3	4,8	4,2	3,3
$6000 < L_2 \leqq 7000$	3,1	2	3,5	3,3	2,2	3,5	–	–	–
$7000 < L_2$	3,6	2,3	4	3,8	2,5	4	–	–	–

Figure 33 shows the method for determining the straightness of the support rail.

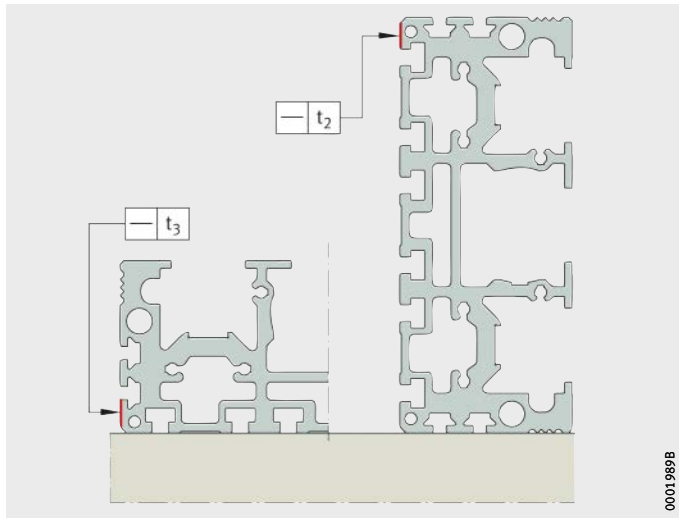

t_2, t_3 = straightness tolerance

Figure 33
Measurement method for straightness tolerances

Tandem actuators with triple toothed belt drive

Ordering example, ordering designation

Available designs of tandem actuators MDKUVE and MDKUSE, see table.

Available designs

Design	Tandem actuator with linear recirculating ball bearing and guideway assembly and toothed belt drive		
Size	Size code		
Carriage unit length	Length	L	mm
Design	Basic	●	
Type of drive	Triple toothed belt	3ZR	
Drive variants	Drive shaft	●	
Additional carriage unit	Second, driven carriage unit	W2	
	Spacing L_{xn} between carriage units		mm
Location of carriage unit	Threaded holes		
	T-slots		N
Support rail	Single-piece		
	Two-piece	FA517.1	
	Support rail segment lengths	L_{T1}	mm
		L_{T2}	mm
	Three-piece	FA517.2	
	Support rail segment lengths	L_{T1}	mm
		L_{T2}	mm
		L_{T3}	mm
Total length	Total length	L_{tot}	mm
	Total stroke length	G_H	mm

● Standard scope of delivery.

■ Design not available.

	Designation and suffixes			
	MDKUVE		MDKUSE	MDKUVE
	15	25	25	35
	240, 500	365, 500	365, 500	500
	●	●	●	●
	3ZR			
	AL, AR, RL, AL-AL, AL-AR, AL-RL, AR-AL, AR-AR, AR-RL, RL-AL, RL-AR, RL-RL, OZ			
	W2			
	State value for L_{x1} (L_{xn} ≧ 100 mm)			
	■	■	■	■
	N	N	N	N
	●	●	●	●
	FA517.1			
	State value for L_{T1} and L_{T2}, see page 290. If these lengths are not stated, L_{T1} and L_{T2} will be determined by Schaeffler.			
	FA517.2			
	State value for L_{T1}, L_{T2} and L_{T3}, see page 290. If these lengths are not stated, L_{T1}, L_{T2} and L_{T3} will be determined by Schaeffler.			
	to be calculated from total stroke length, see page 290			
	to be calculated from effective stroke length, see page 290			

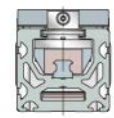

Tandem actuators with triple toothed belt drive

Monorail guidance system, triple toothed belt drive

Tandem actuator with two parallel four-row linear recirculating ball bearing and guideway assemblies	MDKUVE
Size code	15
Carriage unit length L	500 mm
Basic design	–
Drive by three toothed belts	3ZR
Drive shaft on left side	AL
Second, driven carriage unit	W2
Spacing between carriage units L_{x1}	250 mm
Carriage unit with T-slots	N
Total length L_{tot}	2 964 mm
Total stroke length G_H	1 500 mm

Ordering designation

MDKUVE15-500-3ZR-AL-W2-N/2964-1500 (L_{x1} = 250 mm), *Figure 34*

Note total length of first carriage unit and carriage unit length of second carriage unit. Spacing L_{x1} between carriage units must be stated.

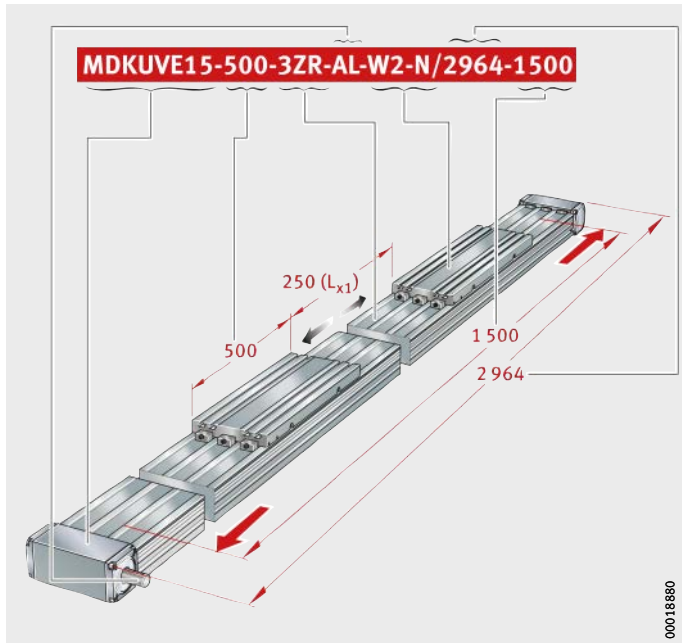

Figure 34
Ordering designation

Monorail guidance system, triple toothed belt drive

Tandem actuator with two parallel six-row linear recirculating ball bearing and guideway assemblies	MDKUSE
Size code	25
Carriage unit length L	365 mm
Basic design	–
Drive by three toothed belts	3ZR
Drive shaft on left side	AL
Carriage unit with T-slots	N
Total length L_{tot}	4 648 mm
Total stroke length G_H	4 000 mm

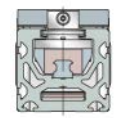

Ordering designation **MDKUSE25-365-3ZR-AL-N/4648-4000**, *Figure 35*

Note total length of carriage unit.

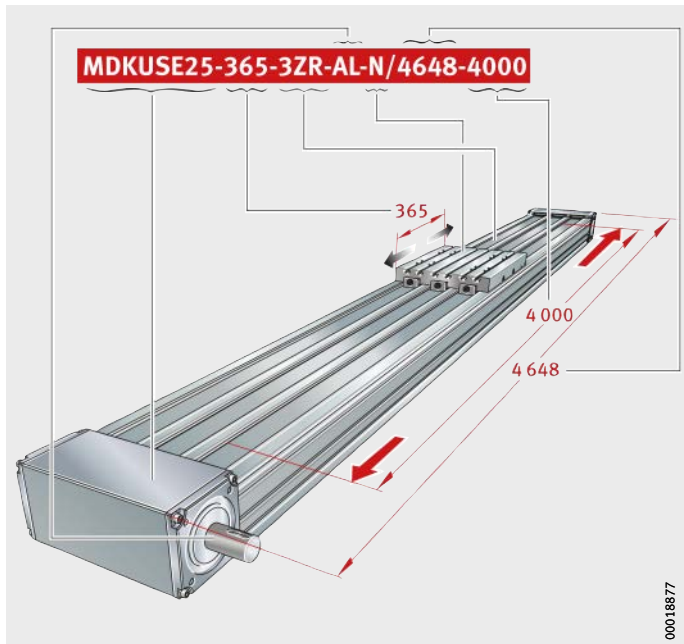

Figure 35
Ordering designation

Tandem actuators

Two four-row linear recirculating ball bearing and guideway assemblies arranged in parallel
Triple toothed belt drive
Basic design

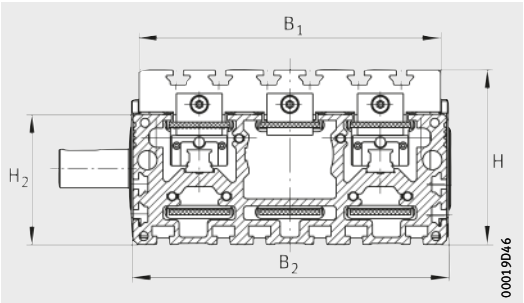

MDKUVE..-3ZR-N

Dimension table · Dimensions in mm

Designation	Dimensions			Mounting dimensions												
	B_2	H	L	B_1	B_4	B_{72}	d_{85} h7	d_{86}	D_{86} G7	D_{87}	G_{87}	h_{13}	h_{14}	h_{15}	h_{16}	h_{85}
MDKUVE15-240-3ZR-N	180	105	240	176	195	2	25	61	70	80	M6	25	45	–	–	44
MDKUVE15-500-3ZR-N			500													
MDKUVE25-365-3ZR-N	260	145	365	250	263	2	32	76	95	115	M8	25	50	–	–	63
MDKUVE25-500-3ZR-N			500													
MDKUVE35-500-3ZR-N	415	200	500	410	447,5	2	50	138	150	212	M8	30	60	90	120	88

Calculation of lengths L_2 and L_{tot}, see page 290.

1) Utilisation of the T-slots is restricted by the holes.

2) ① Carriage units with a length of 240 mm have 2 lubrication nipples according to DIN 3405-A M6, see page 293.
Carriage units with a length of 365 mm or 500 mm have 4 lubrication nipples according to DIN 3405-A M6, see page 293.
② Filling openings in carrier profile, see page 295.
③ Switching tag connectors on carriage unit, see page 296.

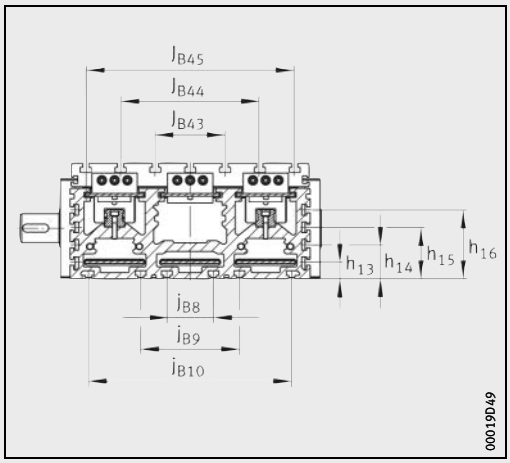

MDKUVE..-3ZR-N

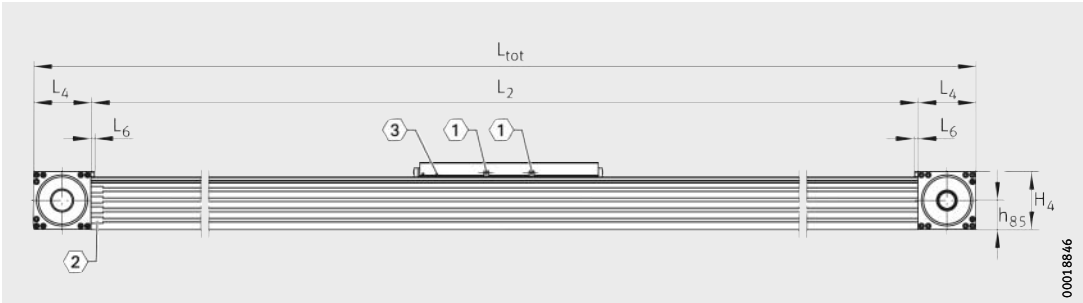

MDKUVE..-3ZR-N
1, 2, 3 [2)]

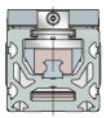

H_2	H_4	j_{B8}	j_{B9}	j_{B10}	J_{B43}	J_{B44}	J_{B45}	l_{41} [1)]	l_{42} [1)]	L_1	L_4	L_6	L_{88}	N_{B85}	N_{L85}	N_{T85}	S_{41} [1)]	t_{87} max.	T_{86}
74,5	84	70	140	–	80	130	–	54	106	282	80	6	45	8^{P9}	25	4	10	12	$2{,}3^{+0{,}3}$
								314	366	542									
108	120,5	50	110	210	35	115	185	135	205	405	115,5	6	60	10^{P9}	32	5	13	15	$4^{+0{,}5}$
								240	340	540									
157	173	80	170	350	120	240	360	–	–	538	170	10	70	14^{P9}	45	5,5	–	27	$4^{+0{,}5}$

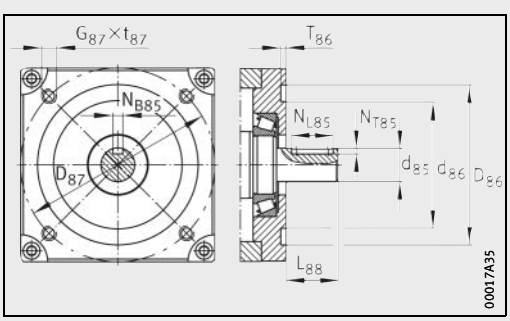

MDKUVE..-3ZR-N · Drive flange, drive shaft

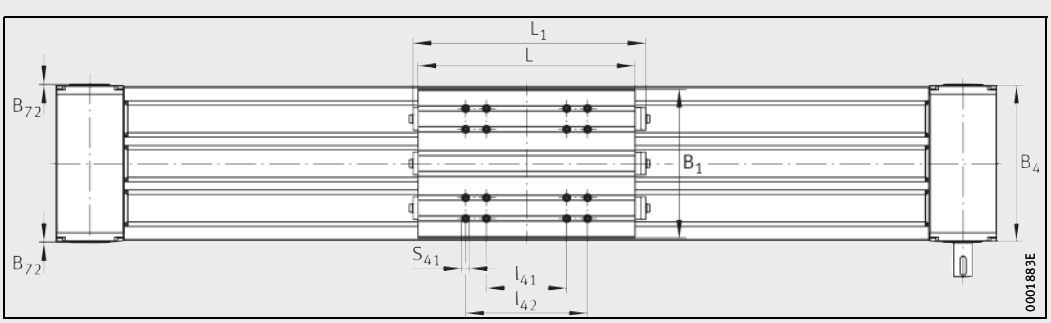

MDKUVE..-3ZR-N · Top view

Tandem actuators

Two four-row linear recirculating ball bearing and guideway assemblies arranged in parallel
Triple toothed belt drive
Second, driven carriage unit

Dimension table · Dimensions in mm

Designation	$L_{x1\ min}$
MDKUVE15-240-3ZR-W2-N	100
MDKUVE15-500-3ZR-W2-N	100
MDKUVE25-365-3ZR-W2-N	100
MDKUVE25-500-3ZR-W2-N	100
MDKUVE35-500-3ZR-W2-N	100

Other geometrical features, see page 302 and page 303.

1) L_{x1} = spacing between carriage units, $L_{x1\ min}$ = minimum spacing between two carriage units.

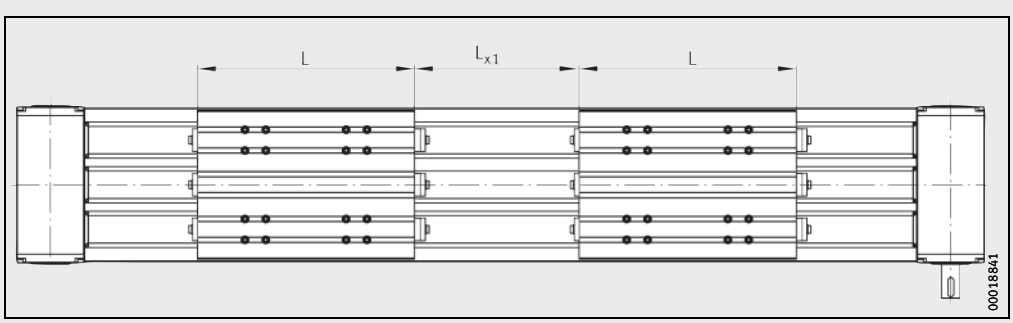

MDKUVE..-3ZR-W2-N · Top view[1)]

Tandem actuators

Two four-row linear recirculating ball bearing and guideway assemblies arranged in parallel
Triple toothed belt drive
Multi-piece support rail

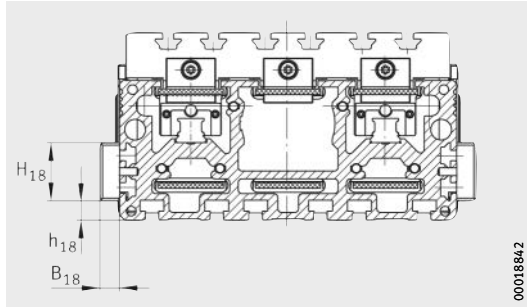

MDKUVE..-3ZR-N-FA517

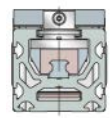

Dimension table · Dimensions in mm

Designation		Mounting dimensions			
Two segments	Three segments	B_{18}	h_{18}	H_{18}	L_{18}
MDKUVE15-240-3ZR-N-FA517.1	**MDKUVE15-240-3ZR-N-FA517.2**	15	2	50	400
MDKUVE15-500-3ZR-N-FA517.1	**MDKUVE15-500-3ZR-N-FA517.2**				
MDKUVE25-365-3ZR-N-FA517.1	**MDKUVE25-365-3ZR-N-FA517.2**	15	15	45	400
MDKUVE25-500-3ZR-N-FA517.1	**MDKUVE25-500-3ZR-N-FA517.2**				
MDKUVE35-500-3ZR-N-FA517.1	**MDKUVE35-500-3ZR-N-FA517.2**	28	10	100	600

Other geometrical features, see page 302 and page 303.

Support rails: segment lengths (L_{Tn} ≧ 1000 mm), see page 290.

[1] ① The segment lengths L_{Tn} must always be designated in ascending order starting from the drive side.

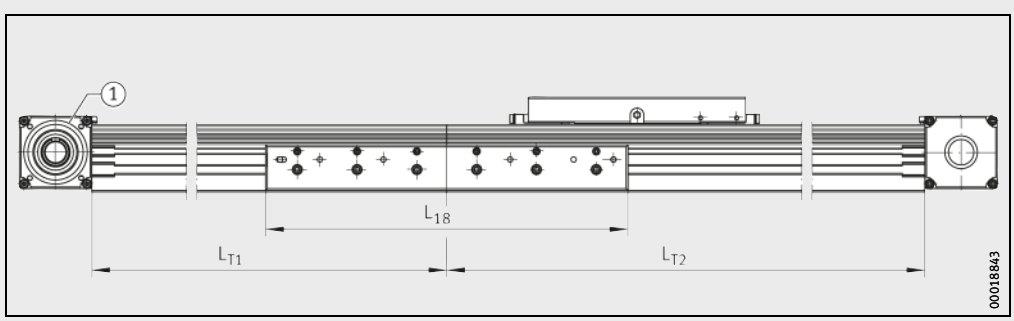

MDKUVE..-3ZR-N-FA517.1 · Two segments
① [1]

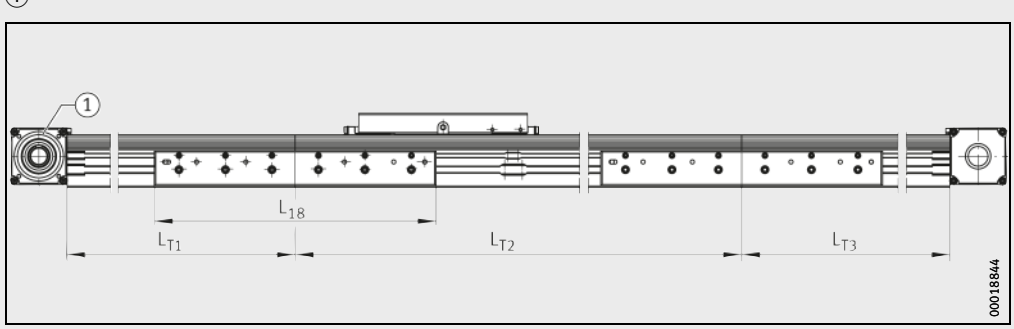

MDKUVE..-3ZR-N-FA517.2 · Three segments
① [1]

Tandem actuators

Two four-row linear recirculating ball bearing and guideway assemblies arranged in parallel
Triple toothed belt drive
Performance data

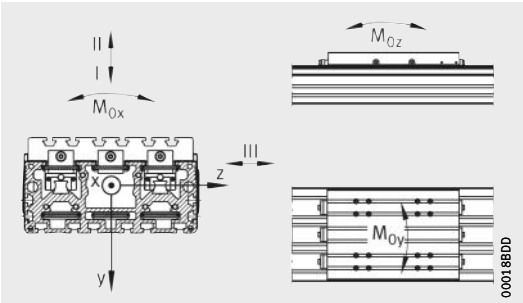

Load directions

Performance data

Designation	Carriage unit guidance system for each carriage unit								
	Basic load ratings per carriage unit						Permissible static moment ratings per carriage unit[1]		
	Load direction I Compressive load		Load direction II Tensile load		Load direction III Lateral load				
	dyn. C N	stat. C_0 N	dyn. C N	stat. C_0 N	dyn. C N	stat. C_0 N	$M_{0x\ per}$ Nm	$M_{0y\ per}$ Nm	$M_{0z\ per}$ Nm
MDKUVE15-240-3ZR (-W2) -N (-FA517)	19 000	58 000	19 000	58 000	19 000	58 000	2 450	1 450	1 450
MDKUVE15-500-3ZR (-W2) -N (-FA517)								8 350	8 350
MDKUVE25-365-3ZR (-W2) -N (-FA517)	47 200	148 000	47 200	148 000	47 200	148 000	9 200	8 500	8 500
MDKUVE25-500-3ZR (-W2) -N (-FA517)							10 000	13 400	15 700
MDKUVE35-500-3ZR (-W2) -N (-FA517)	100 000	288 000	100 000	288 000	100 000	288 000	35 500	19 000	22 500

1) The values are single loads and apply when the underside of the actuator is fully supported.
If there are several carriage units per actuator or combined loads are present, these must be reduced.

2) Maximum permissible drive torque on drive stud.

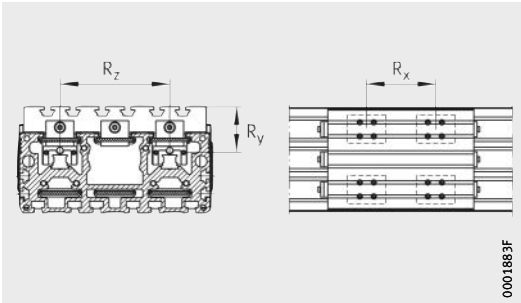

Mounting geometry of carriages

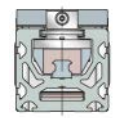

Carriage	Spacings			Moment of inertia of area of carrier profile		Drive					
						Feed per revolution	Maximum drive torque[2)]	Toothed belt			Toothed gears
								Type	Mass m	Permissible operating force	Mass moment of inertia
	R_x	R_y	R_z	I_y	I_z						
	mm	mm	mm	cm^4	cm^4	mm	Nm		kg/m	N	$kg \cdot cm^2$
4×KWVE-15-B-H	80 340	56,5	104	1 636	200	160	115	40AT10	0,75	4 500	8,2
4×KWVE-25-B-H	170 305	72,8	150	7 069	899	230	207	50AT10	0,945	5 640	35,2
4×KWVE35-B-H	262	92,5	260	42 680	5 030	370	850	100ATK10L	2,06	15 000	892

Tandem actuators

Two six-row linear recirculating ball bearing and guideway assemblies arranged in parallel
Triple toothed belt drive
Basic design

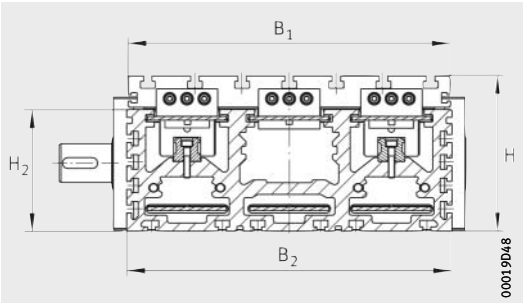

MDKUSE..-3ZR-N

Dimension table · Dimensions in mm

Designation	Dimensions			Mounting dimensions												
	B_2	H	L	B_1	B_4	B_{72}	d_{85} h7	d_{86}	D_{86} G7	D_{87}	G_{87}	h_{13}	h_{14}	h_{85}	H_2	H_4
MDKUSE25-365-3ZR-N	260	145	365	250	263	2	32	76	95	115	M8	25	50	63	108	120,5
MDKUSE25-500-3ZR-N			500													

Calculation of lengths L_2 and L_{tot}, see page 290.

1) Utilisation of the T-slots is restricted by the holes.

2) (1) Carriage units have 2 lubrication nipples according to DIN 3405-A M6, see page 293.
(2) Filling openings in carrier profile, see page 295.
(3) Switching tag connectors on carriage unit, see page 296.

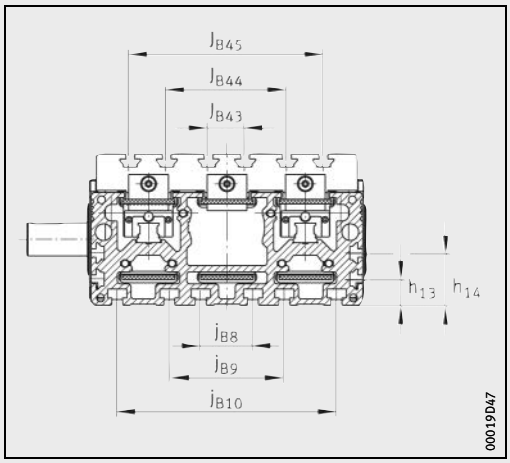

MDKUSE..-3ZR-N

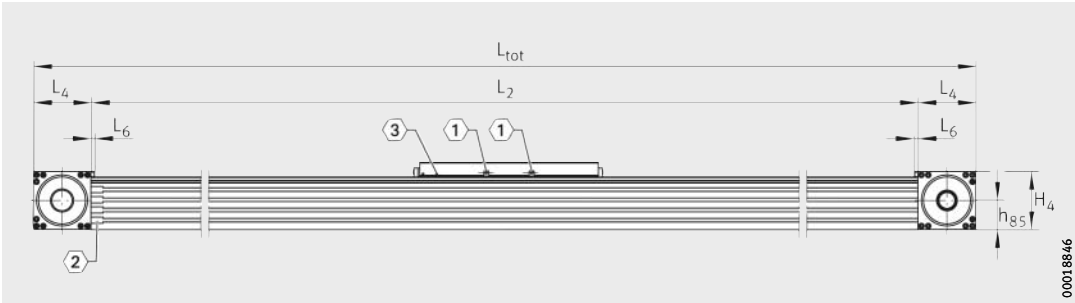

MDKUSE..-3ZR-N
1, 2, 3 [2)]

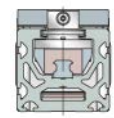

j_{B8}	j_{B9}	j_{B10}	J_{B43}	J_{B44}	J_{B45}	l_{41}	l_{42}	L_1	L_4	L_6	L_{88}	N_{B85}	N_{L85}	N_{T85}	S_{41}	t_{87} max.	T_{86} +0,5
50	110	210	35	115	185	135[1)]	205[1)]	405	115,5	6	60	10^{P9}	32	5	13[1)]	15	4
						240[1)]	340[1)]	540									

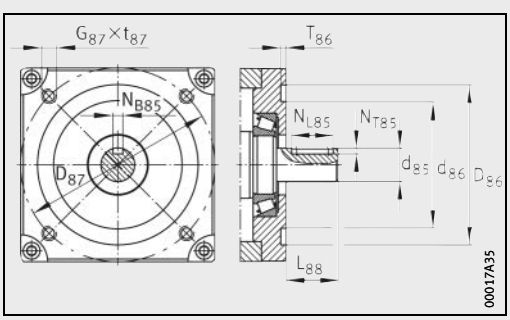

MDKUSE..-3ZR-N · Drive flange, drive shaft

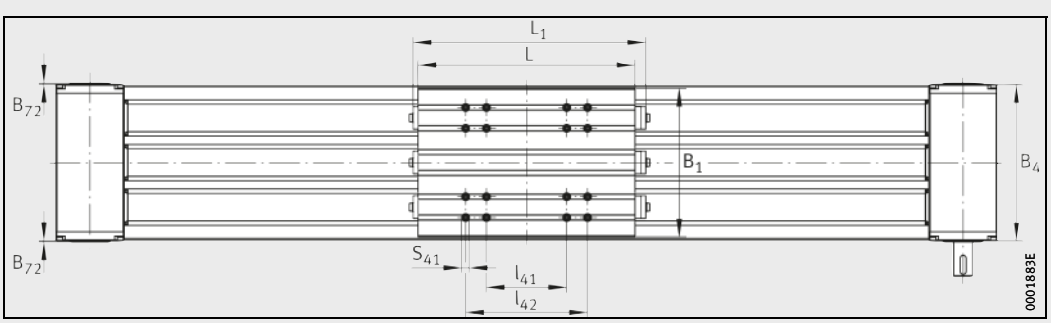

MDKUSE..-3ZR-N · Top view

Tandem actuators

Two six-row linear recirculating ball bearing and guideway assemblies arranged in parallel
Triple toothed belt drive
Second, driven carriage unit

Dimension table · Dimensions in mm

Designation	$L_{x1\ min}$
MDKUSE25-365-3ZR-W2-N	100
MDKUSE25-500-3ZR-W2-N	100

Other geometrical features, see page 308 and page 309.

[1] L_{x1} = spacing between carriage units, $L_{x1\ min}$ = minimum spacing between two carriage units.

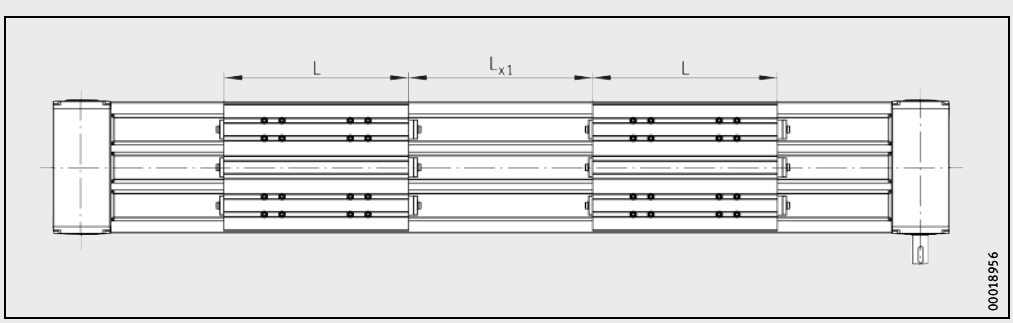

MDKUSE..-3ZR-W2-N · Top view[1]

Tandem actuators

Two six-row linear recirculating ball bearing and guideway assemblies arranged in parallel
Triple toothed belt drive
Multi-piece support rail

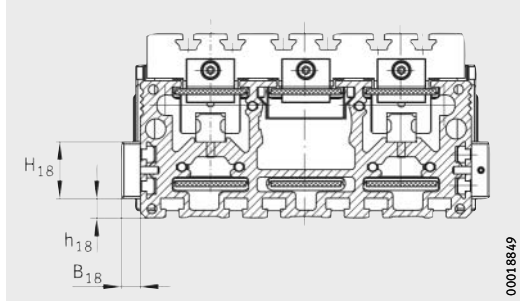

MDKUSE..-3ZR-N-FA517

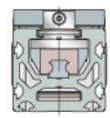

Dimension table · Dimensions in mm

Designation		Mounting dimensions			
Two segments	Three segments	B_{18}	h_{18}	H_{18}	L_{18}
MDKUSE25-365-3ZR-N-FA517.1	**MDKUSE25-365-3ZR-N-FA517.2**	15	15	45	400
MDKUSE25-500-3ZR-N-FA517.1	**MDKUSE25-500-3ZR-N-FA517.2**				

Other geometrical features, see page 308 and page 309.

Support rails: segment lengths (L_{Tn} ≧ 1 000 mm), see page 290.

[1] ① The segment lengths L_{Tn} must always be designated in ascending order starting from the drive side.

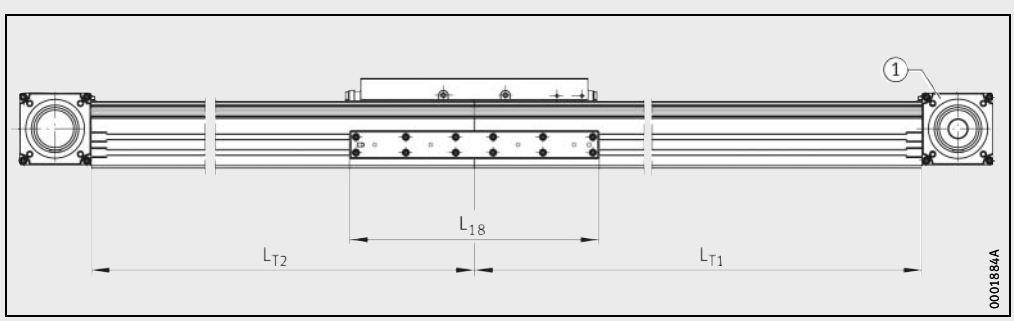

MDKUSE..-3ZR-N-FA517.1 · Two segments
① [1]

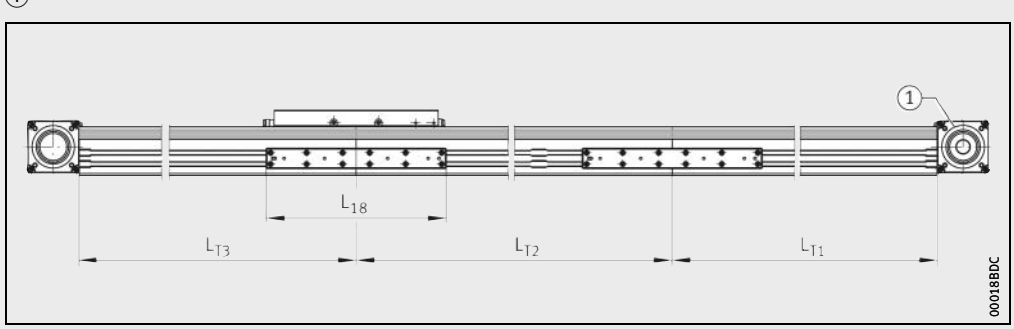

MDKUSE..-3ZR-N-FA517.2 · Three segments
① [1]

Tandem actuators

Two six-row linear recirculating ball bearing and guideway assemblies arranged in parallel
Triple toothed belt drive
Performance data

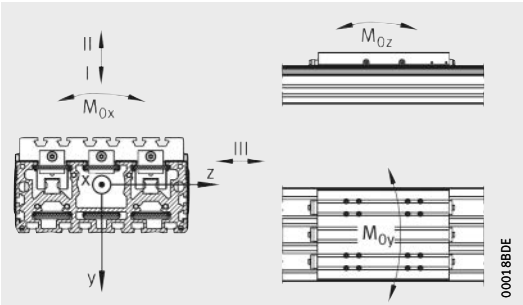

Load directions

Performance data

Designation	Carriage unit guidance system for each carriage unit								
	Basic load ratings per carriage unit						Permissible static moment ratings per carriage unit[1]		
	Load direction I Compressive load		Load direction II Tensile load		Load direction III Lateral load				
	dyn. C N	stat. C_0 N	dyn. C N	stat. C_0 N	dyn. C N	stat. C_0 N	$M_{0x\ per}$ Nm	$M_{0y\ per}$ Nm	$M_{0z\ per}$ Nm
MDKUSE25-365-3ZR (-W2) -N (-FA517)	73 900	268 000	60 400	172 000	56 200	184 000	9 300	9 550	9 200
MDKUSE25-500-3ZR (-W2) -N (-FA517)							11 200	15 900	15 200

1) The values are single loads and apply when the underside of the actuator is fully supported.
If there are several carriage units per actuator or combined loads are present, these must be reduced.

2) Maximum permissible drive torque on drive stud.

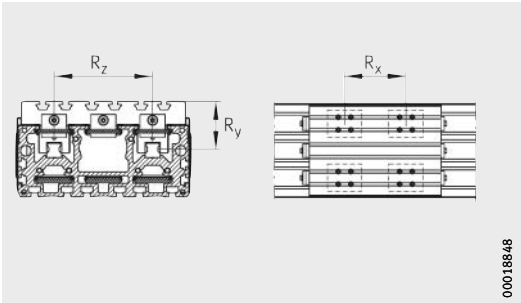

Mounting geometry of carriages

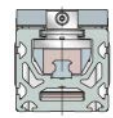

Carriage	Spacings			Moment of inertia of area of carrier profile		Drive					
						Feed per revolution	Maximum drive torque[2)]	Toothed belt			Toothed gears
								Type	Mass m	Permissible operating force	Mass moment of inertia
	R_x	R_y	R_z	I_y	I_z						
	mm	mm	mm	cm^4	cm^4	mm	Nm		kg/m	N	$kg \cdot cm^2$
4×KWSE25-H	170	69,3	150	7 069	899	230	207	50AT10	0,945	5 640	35,2
4×KWSE25-H	305										

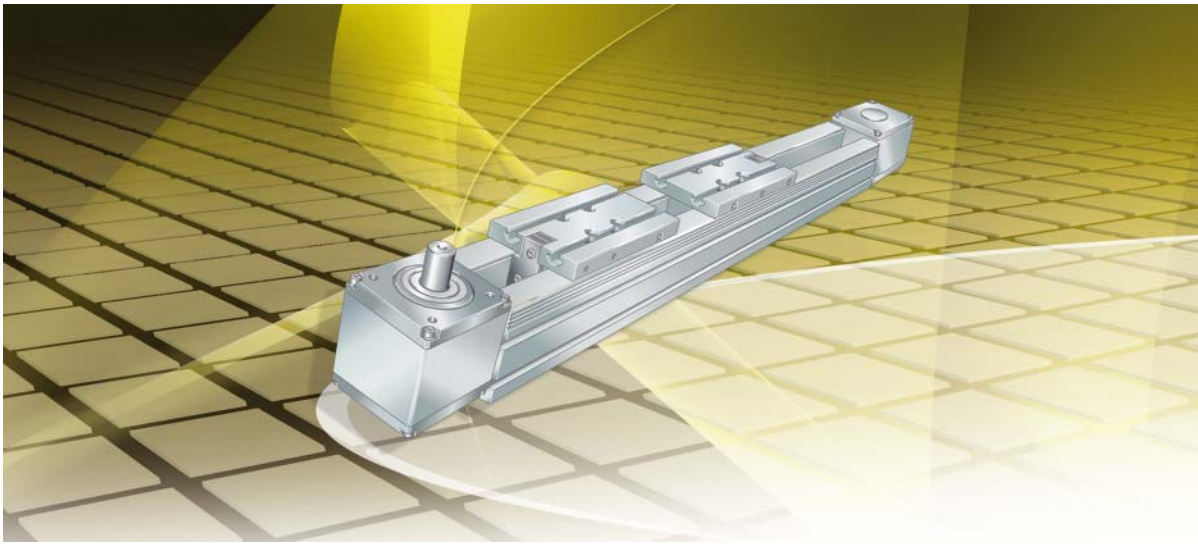

Clamping actuator with toothed belt drive

Clamping actuator with toothed belt drive

Basic design

One linear recirculating ball bearing and guideway assembly

Toothed belt drive

MKKUSE20-155-ZR..-N

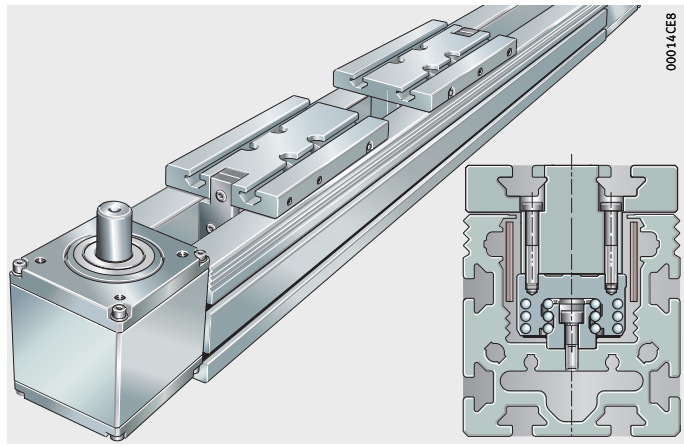

Clamping actuator with toothed belt drive

Features

Actuators MKKUSE..-ZR are designed for special applications and correspond in their basic design and technical characteristics to the actuators MKUSE..-ZR. Clamping actuators have two carriage units moving in synchronised opposing directions.

With the exception of the special designs, the information on the features of clamping actuators matches the information on the features of linear actuators, see page 211.

Special design

Special designs are available by agreement. Examples of these are clamping actuators:

- with reinforced or antistatic toothed belt or toothed belt of high temperature design
- with an extended carriage unit
- with a drive stud of special dimensions
- with T-strips inserted in the T-slots
- with special machining.

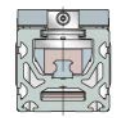

Drive

The actuators are available without a drive shaft as well as with a drive shaft on the left side, right side or passing through the unit (above, below), see table.

Possible combinations and drive variants, see also *Figure 1*.

Suffixes

Drive variants	Suffix
Drive shaft above	AO
Drive shaft below	AU
No drive shaft	OZ
Drive shaft on both sides (above and below)	OU

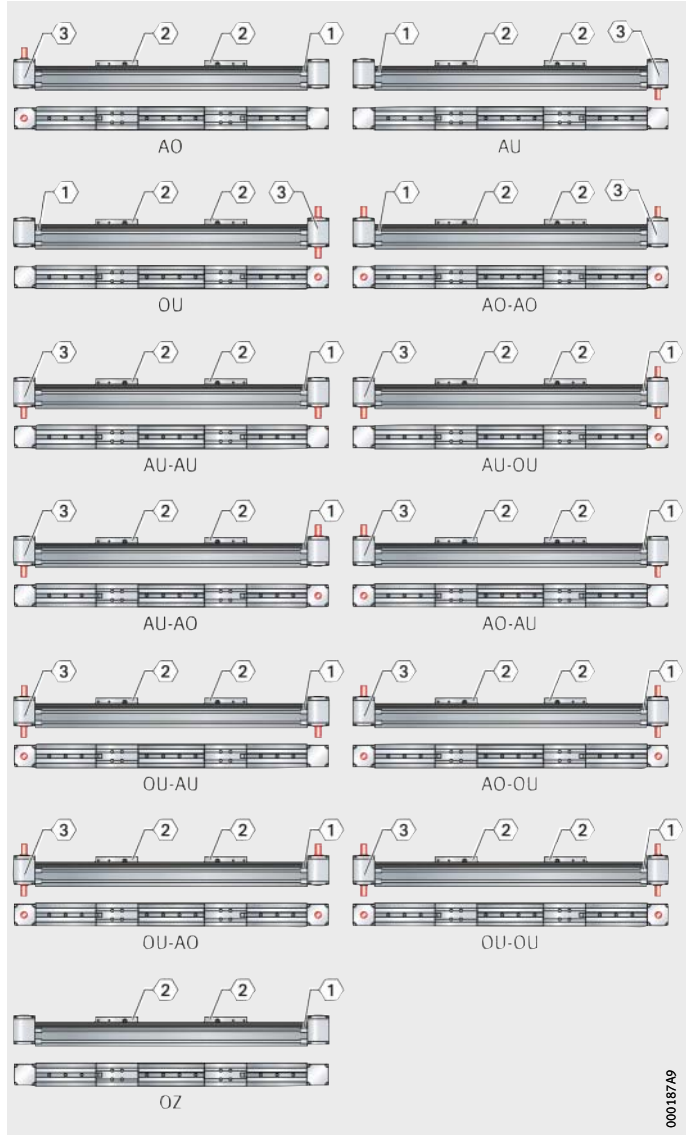

① Filling slot for T-nuts and T-bolts
② Carriage unit
③ Drive and marking side

Figure 1
Drive variants – clamping actuators MKKUSE20-155-ZR

Mechanical accessories

A large number of accessories are available for clamping actuators with monorail guidance system and toothed belt drive.
The allocation of accessories, see table, is valid if the data match the Technical principles, page 13, and the Design and safety guidelines, page 320.

Allocation

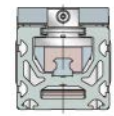

Linear actuator / size	MKKUSE..-ZR	20
Fixing brackets, see page 811		
WKL-65×65×30-N		①
WKL-65×65×35-N		①
WKL-90×90×35-N		①
Clamping lugs, see page 829		
SPPR-24×20		①
T-nuts, see page 835		
MU-DIN 508 M6×8		①
MU-M6×8 (similar to DIN 580)		①
T-nuts made from corrosion-resistant steel, see page 835		
MU-DIN 508 M6×8-RB		①
T-bolts, see page 835		
SHR-DIN 787 M8×8×32		①
Rotatable T-nuts, see page 836		
MU-M4×8-RHOMBUS		①
MU-M6×8-RHOMBUS		①
Positionable T-nuts, see page 836		
MU-M6×8-POS		①
MU-M8×8-POS		①
Hexagon nuts, see page 837		
MU-ISO 4032 M8		①
T-strips, see page 837		
LEIS-M6/8-T-NUT-SB-ST		①
LEIS-M8/8-T-NUT-SB-ST		①
LEIS-M6/8-T-NUT-HR-ST		①
LEIS-M6/8-T-NUT-HR-ALU		①
Connector sets (parallel connectors), see page 838		
VBS-PVB8		①
Slot closing strips, see page 838		
NAD-8×4,5		①
NAD-8×11,5		①

① Suitable.

Design and safety guidelines

See section Actuators with toothed belt drive, page 208. The following pages describe exclusively the differences between the clamping actuators and the linear actuators.

Idling drive torque

The idling drive torque M_0 of clamping actuators is calculated for a constant velocity and for a horizontal (M_{0h}) or vertical (M_{0v}) mounting position, starting *Figure 2*. The idling drive torque increases with increasing travel velocity. The data in the diagrams are maximum values.

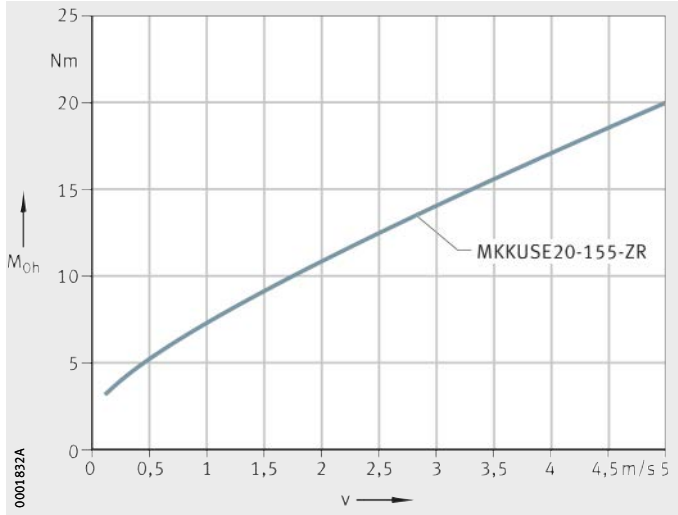

MKKUSE20-155-ZR

v = travel velocity of carriage unit
M_{0h} = idling drive torque

Figure 2
Idling drive torque
Horizontal mounting position

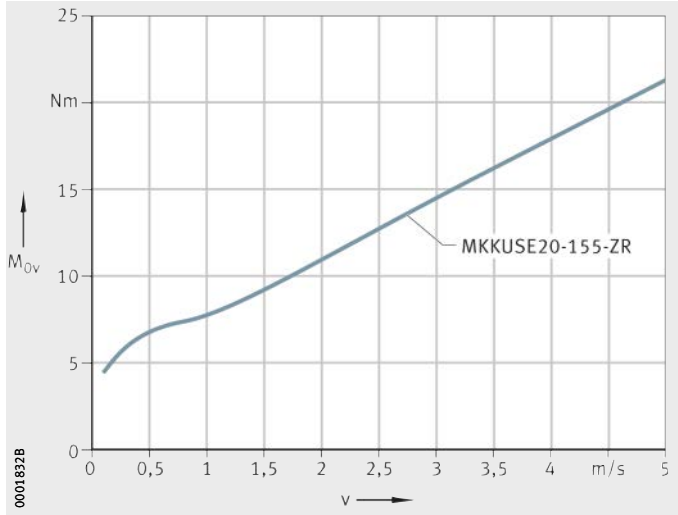

MKKUSE20-155-ZR

v = travel velocity of carriage unit
M_{0v} = idling drive torque

Figure 3
Idling drive torque
Vertical mounting position

Length calculation of clamping actuators

The length calculation of clamping actuators is based on the required effective stroke length N_H. The effective stroke length N_H is the minimum necessary stroke length of a carriage unit.
The effective stroke length N_H must be increased by the addition of safety spacing values on both sides of the travel distance.

The total length L_{tot} of the clamping actuator is determined from the support rail length L_2, the lengths of the return units L_4 and the minimum spacing between the carriage units L_k.

Parameters for length calculation

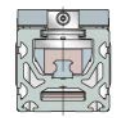

G_H mm
Total stroke length

N_H mm
Effective stroke length

S mm
Safety spacing, for minimum values see table, page 322

L mm
Length of carriage plate

L_2 mm
Length of support rail

L_4 mm
Length of return unit

L_{tot} mm
Total length of actuator

L_k mm
Minimum spacing between the carriage units when moved together.

Total stroke length G_H

The total stroke length G_H is determined from the two required effective stroke lengths and the safety spacings, which must be at least 85 mm.

$$G_H = 2 \cdot N_H + 2 \cdot S$$

Support rails

Clamping actuators are only available with a single-piece support rail. The maximum length of a support rail is 4 000 mm.

Minimim spacing L_k between carriage units

The minimum spacing L_k between the carriage units when moved together is 20 mm.

Total length L_{tot} and support rail length L_2

The following equations are designed for the clamping actuator. The parameters and their position can be found in *Figure 4* and the table.

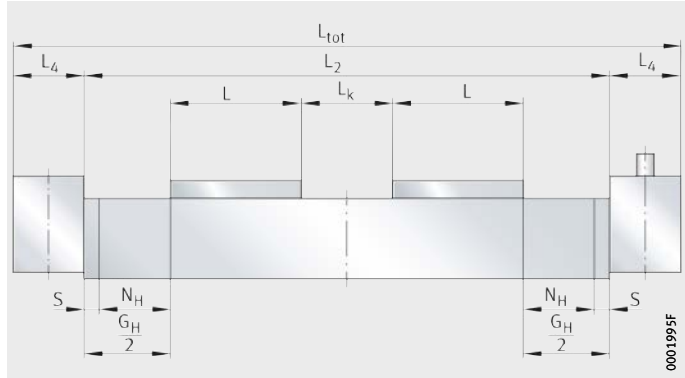

Figure 4
Length parameters

Two carriage units

$$L_2 = G_H + 2 \cdot L + L_k$$

Total length

$$L_{tot} = L_2 + 2 \cdot L_4$$

Length parameters

Designation	L mm	L_4 mm	S mm
MKKUSE20-155-ZR-N	155	80	85

Mass calculation

The total mass of a clamping actuator is calculated from the mass of the actuator without carriage units and the two carriage units. Insert the values from the table in the following equation. The values m_{LAW} and m_{BOL} are mandatory.

$$m_{tot} = m_{LAW} + m_{BOL}$$

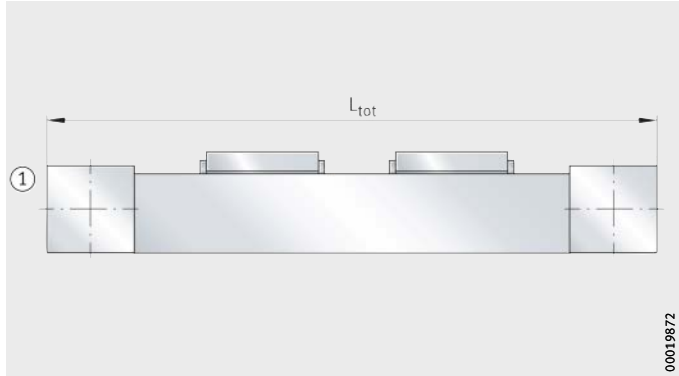

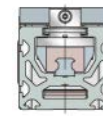

① Basic design with two carriage units

Figure 5
Basic design

Values for mass calculation

Designation	Mass	
	Carriage unit m_{LAW} ≈kg	Actuator without carriage unit m_{BOL} ≈kg
MKKUSE20-155-ZR-N	2,6[1)]	$(L_{tot} - 160) \times 0{,}010\,3 + 1{,}56$

1) Two carriage units.

Lubrication

The information on the lubrication of clamping actuators matches the information on the lubrication of linear actuators, see page 208. The only differences are in the information on relubrication quantities and relubrication points, see table.

Relubrication quantities

Relubrication should be carried out wherever possible with several partial quantities at various times instead of the complete quantity at the time of the relubrication interval. Relubrication quantities, see table.

Grease quantities

Clamping actuator	Relubrication quantity per carriage unit, lubrication nipple and longitudinal side ≈g
MKKUSE20-155-ZR	5 to 6

Relubrication points

The carriage units have funnel type lubrication nipples according to DIN 3405-A M6 on the right or left longitudinal side of each carriage unit. Furthermore, they can be relubricated, *Figure 6*, *Figure 7* and *Figure 8*, page 325.

MKKUSE20..-ZR

① Funnel type lubrication nipple
DIN 3405-A M6

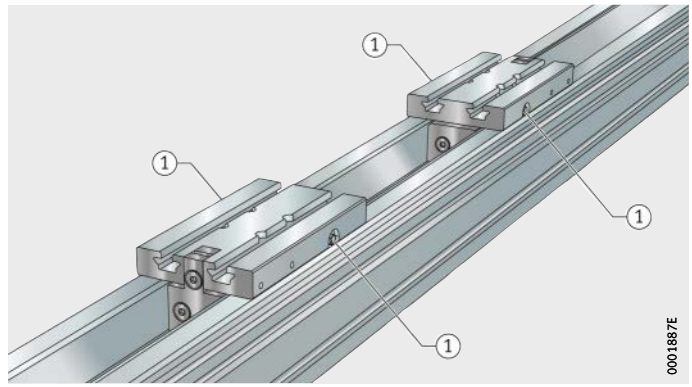

Figure 6
Lubrication points

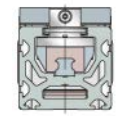

MKKUSE20..-ZR

① Funnel type lubrication nipple
DIN 3405-A M6

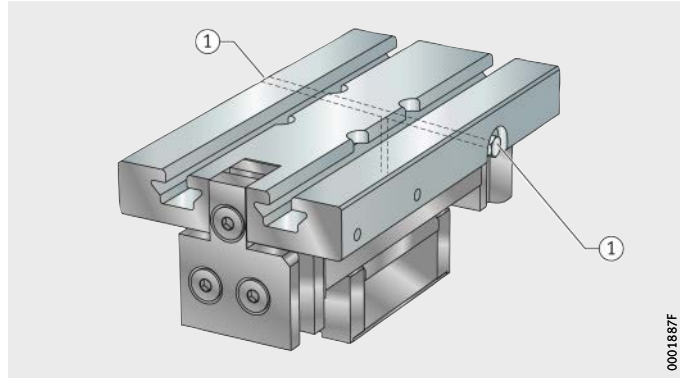

Figure 7
Lubrication ducts
in the carriage unit

During lubrication of actuators, all lubrication points on one longitudinal side of both carriage units must always be provided with lubricant.

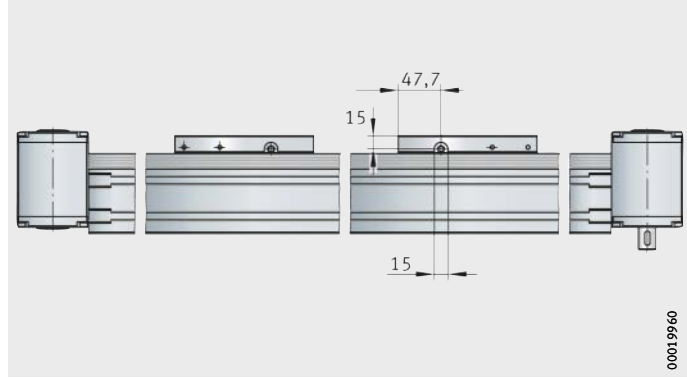

Figure 8
Position of lubrication points

T-slots

The T-slots in the support rail are designed for T-bolts according to DIN 787 and T-nuts according to DIN 508, *Figure 9*.
T-nuts and T-bolts are inserted using filling slots in the support rail.

MKKUSE20..-ZR

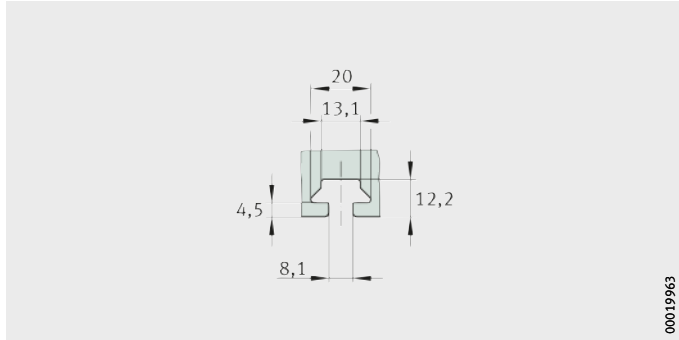

Figure 9
Sizes of T-slots
in support rail and carriage unit

Filling openings

The filling openings are located on three sides of the clamping actuator: on both sides and underneath, *Figure 10*.

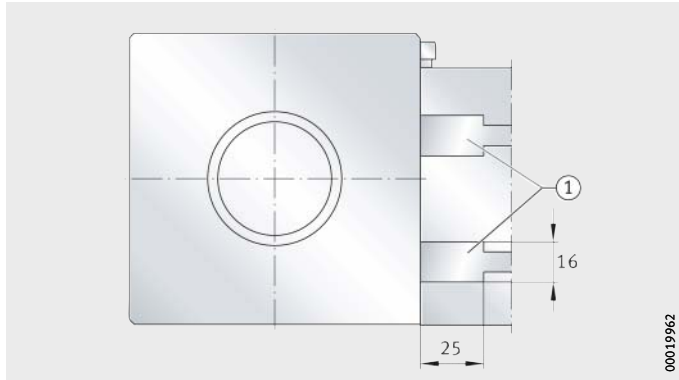

① Filling opening

Figure 10
Filling opening in support rail

Connectors for switching tags

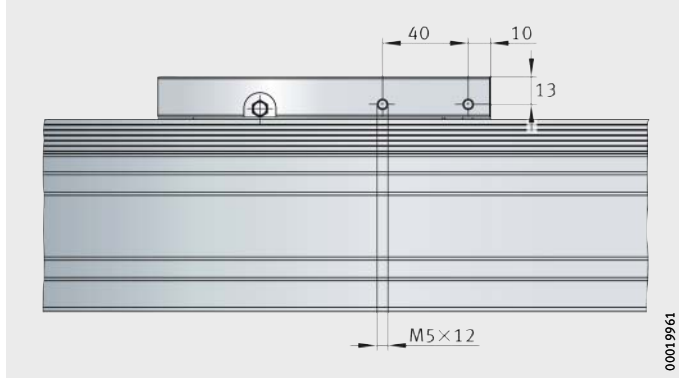

Figure 11
Connectors for switching tags
on the carriage unit

Accuracy

Length tolerances

The information on the length tolerance of the clamping actuator matches the information on the length tolerance of linear actuators, see page 245.

Straightness of support rails

The information on the straightness of the support rail of the clamping actuator matches the information on the straightness of the support rails of linear actuators, see page 246.

Values for the straightness tolerances of support rails of clamping actuators, see table.

Tolerances

Length L_2 of support rail mm	MKKUSE20..-ZR		
	t_2 mm	t_3 mm	Torsion mm
$L_2 \leqq 1\,000$	0,4	0,3	0,8
$1\,000 < L_2 \leqq 2\,000$	0,8	0,5	1
$2\,000 < L_2 \leqq 3\,000$	1,2	0,7	1,2
$3\,000 < L_2 \leqq 4\,000$	1,5	1	1,6

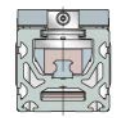

Ordering example, ordering designation

Available designs of clamping actuator MKKUSE, see table.

Available designs

Design	Clamping actuator with six-row linear recirculating ball bearing and guideway assembly		
Size	Size code		
Carriage unit length	Length	L	mm
Design	Basic		
Type of drive	Toothed belt	ZR	
Drive variants	Drive shaft	●	
Anti-corrosion protection	Corrosion-resistant design	RB	
Location of carriage unit	Threaded holes		
	T-slots	N	
Lengths	Minimum spacing between the carriage units	L_k	mm
	Total length	L_{tot}	mm
	Total stroke length	G_H	mm

● Standard scope of delivery.

■ Design not available.

Designation and suffixes MKKUSE
20
155
●
ZR
AO, AU, OU, AO-AO, AO-AU, AO-OU, AU-AO, AU-AU, AU-OU, OU-AO, OU-AU, OU-OU, OZ
■
■
N
Customer specification L_k (where $L_k \geqq 20$ mm)
to be calculated from total stroke length, see page 321
to be calculated from effective stroke length, see page 321

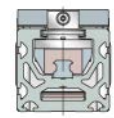

Monorail guidance system, toothed belt drive, six-row linear recirculating ball bearing and guideway assembly

Clamping actuator with six-row linear recirculating ball bearing and guideway assembly	MKKUSE
Size code	20
Carriage unit length L	155 mm
Basic design	–
Drive by toothed belt	ZR
Drive shaft above	AO
Carriage unit with T-slots	N
Spacing between carriage units when moved together L_k	80 mm
Total length L_{tot}	1 050 mm
Total stroke length G_H	500 mm

Ordering designation

MKKUSE20-155-ZR-AO-N/1050-500 (L_k = 80 mm), *Figure 12*

Note the total length of the carriage units and the minimum spacing $L_{k\,min}$ between the carriage units when moved together. The spacing L_k between the carriage units must be stated.

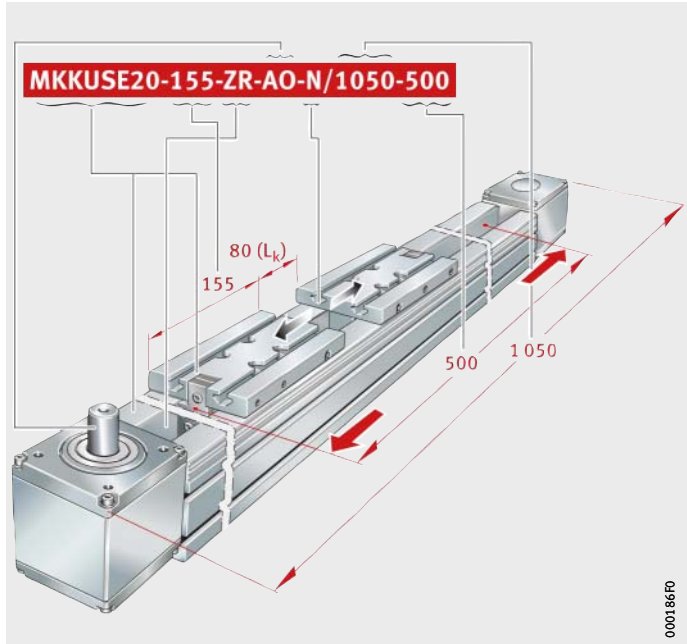

Figure 12
Ordering designation

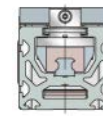

Clamping actuator

Six-row linear recirculating ball bearing and guideway assembly
Toothed belt drive
Two carriage units moving in opposing directions

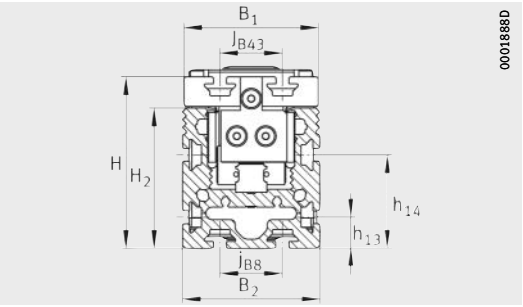

MKKUSE20-155-ZR-N

Dimension table · Dimensions in mm

Designation	Dimensions			Mounting dimensions								
	B_2	H	L	B_1	B_4	d_{85} h7	d_{86}	D_{86} G7	D_{87}	G_{87}	h_{13}	h_{14}
MKKUSE20-155-ZR-N	88	110	155	86	80	20	61	70	80	M6	20	60

Calculation of lengths L_2 and L_{tot}, see page 321.

1) Utilisation of the T-slots is restricted by the holes.

2) ① 2 lubrication nipples DIN 3405-A M6, see page 324.
② Filling openings in carrier profile, see page 326.
③ Switching tag connectors on carriage unit, see page 326.

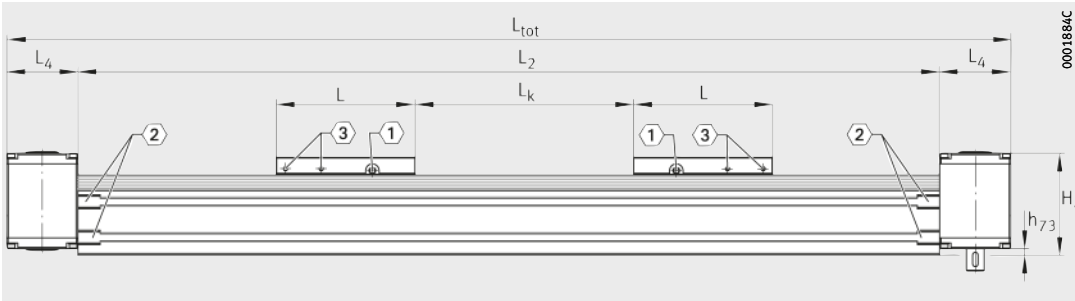

MKKUSE20-155-ZR-N
⟨1⟩, ⟨2⟩, ⟨3⟩ [2)]

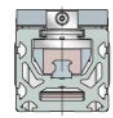

h_{73}	H_2	H_4	j_{B8}	J_{B43}	l_{41} [1)]	L_4	L_{88}	N_{B85}	N_{L85}	N_{T85}	S_{41} [1)]	t_{87} max.	T_{86} +0,3
7,5	90	114,5	40	40	36	80	25	6^{P9}	16	3,5	10	12	2,3

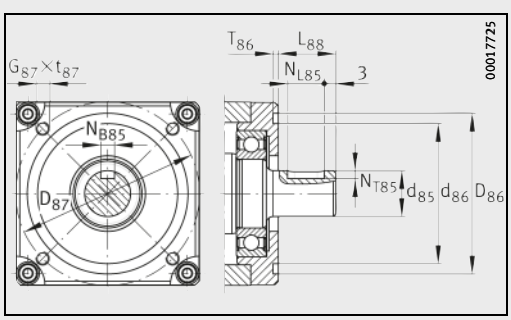

MKKUSE20-155-ZR-N · Drive flange, drive shaft

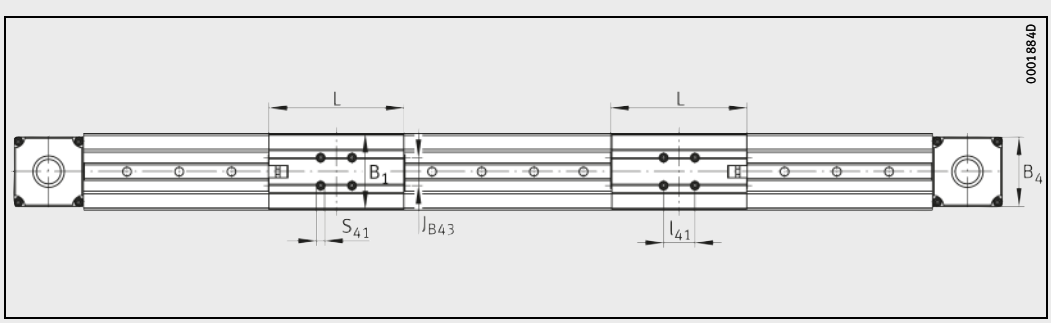

MKKUSE20-155-ZR-N · Top view

Clamping actuator

Six-row linear recirculating ball bearing and guideway assembly
Toothed belt drive
Two carriage units moving in opposing directions
Performance data

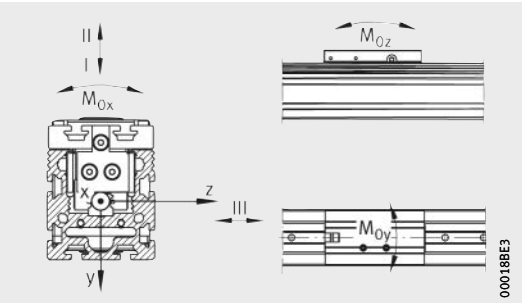

Load directions

Performance data

Designation	Carriage unit guidance system for each carriage unit								
	Basic load ratings per carriage unit						Permissible static moment ratings (per carriage unit)[1]		
	Load direction I Compressive load		Load direction II Tensile load		Load direction III Lateral load				
	dyn. C N	stat. C_0 N	dyn. C N	stat. C_0 N	dyn. C N	stat. C_0 N	$M_{0x\ per}$ Nm	$M_{0y\ per}$ Nm	$M_{0z\ per}$ Nm
MKKUSE20-155-ZR-N	22 000	52 000	17 500	33 500	16 300	36 000	358	333	303

1) The values are single loads and apply when the underside of the actuator is fully supported.
If there are several carriage units per actuator or combined loads are present, these must be reduced.

2) Maximum permissible drive torque on drive stud.

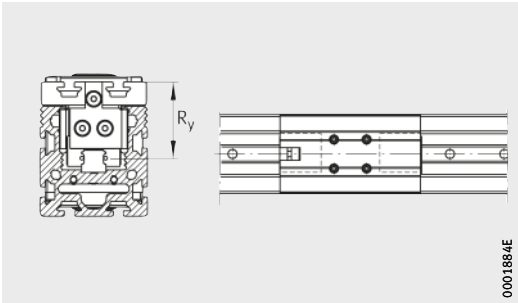

Mounting geometry of carriages

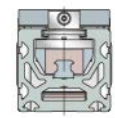

Carriage		Moment of inertia of area of carrier profile		Drive					
	Spacings			Feed per revolution	Maximum drive torque[2)]	Toothed belt			Toothed gears
						Type	Mass	Permissible operating force	Mass moment of inertia
	R_y	I_y	I_z						
	mm	cm^4	cm^4	mm	Nm		kg/m	N	$kg \cdot cm^2$
2×KWSE20-H	63,1	300	198	160	18	32AT5	0,11	650	2,2

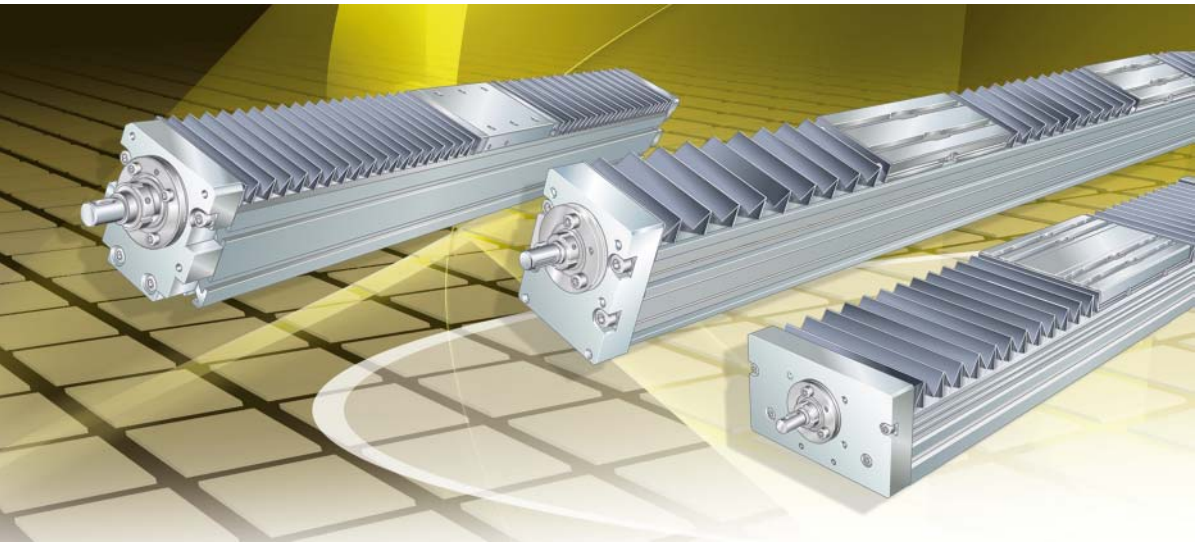

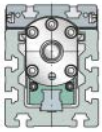

Actuators with monorail guidance system and ball screw drive

Linear actuators
Tandem actuators
Clamping actuators

Actuators with monorail guidance system and ball screw drive

In the case of linear actuators MKUVE..-KGT and MKUSE..-KGT, the carriage units are guided on a linear recirculating ball bearing and guideway assembly. They fulfil moderate accuracy requirements and are suitable for moderate loads and moments.
Their area of application lies mainly in positioning and handling functions in automation technology and electronic component manufacture.

An overview of specific product characteristics for preselection of linear actuators is given on page 340.

In the case of tandem actuators MDKUVE..-KGT and MDKUSE..-KGT, the carriage unit is supported on two parallel linear recirculating ball bearing and guideway assemblies. Due to their design, these are suitable for high loads and moments. Based on their rigid design, the area of application of tandem actuators as components lies in peripheral systems for machine tools, machining systems, handling and assembly equipment as well as in joining systems and measurement and inspection machinery.

An overview of specific product characteristics for preselection of tandem actuators is given on page 342.

In the case of the clamping actuator MKKUVE..-KGT, the carriage units are guided on a linear recirculating ball bearing and guideway assembly. They fulfil moderate accuracy requirements and are suitable for moderate loads and moments. Their area of application lies mainly in positioning and handling functions in automation technology and electronic component manufacture.

An overview of specific product characteristics for preselection of clamping actuators is given on page 342.

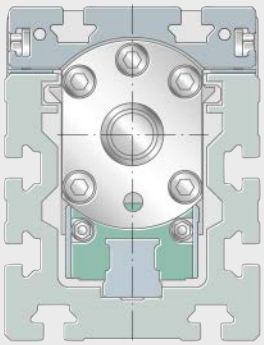

MKUVE15..-KGT

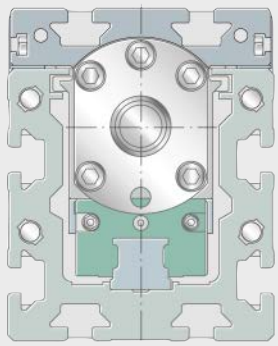

MKUVE20..-KGT

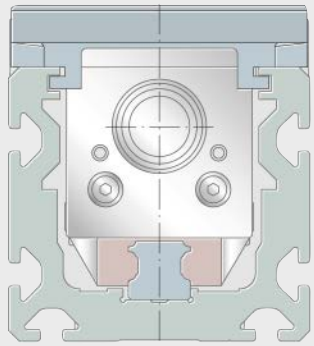

MKUSE25..-KGT

000198AA

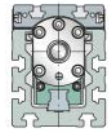

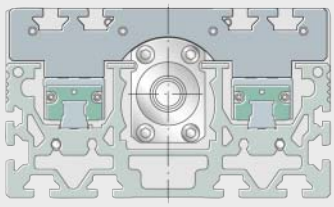

MDKUVE15..-KGT

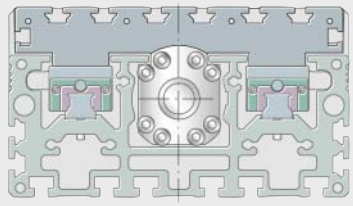

MDKUVE25..-KGT

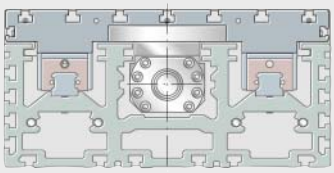

MDKUSE35..-KGT

000198AC

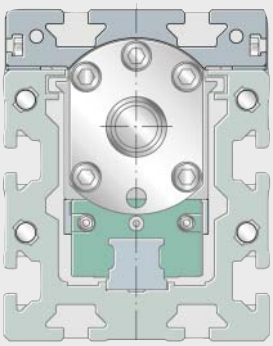

MKKUVE20..-KGT

000198AB

Linear actuator	Characteristics			
	Mounting cross-section width×height mm	Length of carriage unit L mm	Support rail length L_2 mm	Load carrying capacity
MKUVE15-160-KGT..-N	65×85	160	5 850	From all directions
MKUVE15-160-KGT/50..-N	65×85	160	2 900	From all directions
MKUVE20-200-KGT..-N	88×110	200	5 850	From all directions
MKUSE25-200-KGT	112×125	200	5 850	From all directions

1) Basic load ratings C and C_0 in compressive direction.

2) Basic load ratings in accordance with DIN 69051.
Due to the modified calculation algorithms in DIN 69051,
the basic load ratings C_a and C_0 may differ in comparison with older data.

3) Single nut with clearance and double nut with preload.

4) Single nut with clearance only.

Guidance system	Basic load ratings of carriage guidance system[1]		Ball screw drive		Basic load ratings of nut[2]		Maximum travel velocity	Maximum acceleration	Repeat accuracy		Operating temperature	Mounting position
	dyn. C	stat. C_0	∅ d_0	P	C_a	C_0			With single nut	With double nut		
	N	N	mm	mm	N	N	m/s	m/s²	mm	mm	°C	
KUVE, preloaded clearance-free	11 700	29 000	16	5[3]	9 300	13 100	0,25	20	±0,05	±0,025	0 to +80	Horizontal and vertical
				10[3]	15 400	26 500	0,63					
KUVE, preloaded clearance-free	11 700	29 000	16	50[4]	4 800	11 000	2,5	20	±0,05	–	0 to +80	Horizontal and vertical
KUVE, preloaded clearance-free	21 300	54 000	20	5[3]	10 500	16 600	0,29	20	±0,05	±0,025	0 to +80	Horizontal and vertical
				10[3]	12 700	22 100	0,5					
				20[4]	11 600	18 400	1,16			–		
				50[4]	13 000	24 600	2,9					
KUSE, preloaded clearance-free	45 400	134 000	32	5[3]	21 500	49 300	0,215	20	±0,05	±0,025	0 to +80	Horizontal and vertical
				10[3]	33 400	54 500	0,43					
				20[3]	29 700	59 800	0,86					
				40[4]	14 900	32 400	1,73			–		

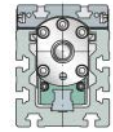

Tandem actuators

Tandem actuator	Characteristics			
	Mounting cross-section width×height mm	Length of carriage unit L mm	Support rail length L_2 mm	Load carrying capacity
MDKUVE15-240-KGT..-N	180×105	240	5 850	From all directions
MDKUVE25-365-KGT..-N **MDKUSE25-365-KGT..-N**	260×145	365	5 850	From all directions
MDKUVE35-500-KGT..-N	415×200	500	5 850	From all directions

Clamping actuator

Clamping actuator	Characteristics			
	Mounting cross-section width×height mm	Length of carriage unit L mm	Support rail length L_2 mm	Load carrying capacity
MKKUVE20-200-KGT/5..-N	88×110	200	5 850	From all directions

1) Basic load ratings C and C_0 in compressive direction.

2) Basic load ratings C_a and C_0 in accordance with DIN 69051.
Since calculation has been modified, C and C_0 may differ in comparison with previous data.

Basic load ratings in accordance with DIN 69051.
Due to the modified calculation algorithms in DIN 69051, the basic load ratings C_a and C_0 may differ in comparison with older data.

3) Per carriage unit.

4) Single nut with clearance and double nut with preload.

5) Single nut with clearance only.

Guidance system	Basic load ratings of carriage guidance system[1]		Ball screw drive		Basic load ratings of nut[2]		Maximum travel velocity	Maximum acceleration	Repeat accuracy		Operating temperature	Mounting position
	dyn. C	stat. C_0	∅ d_0	P	C_a	C_0			With single nut	With double nut		
	N	N	mm	mm	N	N	m/s	m/s²	mm	mm	°C	
KUVE, preloaded clearance-free	19 000	58 000	20	5[4]	10 500	16 600	0,29	20	±0,05	±0,025	0 to +80	Horizontal and vertical
				10[4]	12 700	22 100	0,5					
				20[5]	11 600	18 400	1,16			–		
				50[5]	13 000	24 600	2,9					
KUVE or KUSE, preloaded clearance-free	47 200 73 900	148 000 268 000	32	5[4]	21 500	49 300	0,215	20	±0,05	±0,025	0 to +80	Horizontal and vertical
				10[4]	33 400	54 500	0,43					
				20[4]	29 700	59 800	0,86					
				40[5]	14 900	32 400	1,73			–		
KUVE, preloaded clearance-free	100 000	288 000	40	5[4]	23 800	63 100	0,18	20	±0,05	±0,025	0 to +80	Horizontal and vertical
				10[4]	38 000	69 100	0,36					
				20[4]	33 300	76 100	0,73					
				40[5]	35 000	101 900	1,46			–		

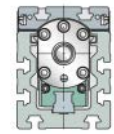

Guidance system	Basic load ratings of carriage guidance system[1]		Ball screw drive		Basic load ratings of nut[2]		Maximum travel velocity[3]	Maximum acceleration	Repeat accuracy		Operating temperature	Mounting position
	dyn. C	stat. C_0	∅ d_0	P	C_a	C_0			With single nut	With double nut		
	N	N	mm	mm	N	N	m/s	m/s²	mm	mm	°C	
KUVE, preloaded clearance-free	21 300	54 000	20	5[4]	10 500	16 600	0,29	20	±0,05	±0,025	0 to +80	Horizontal and vertical

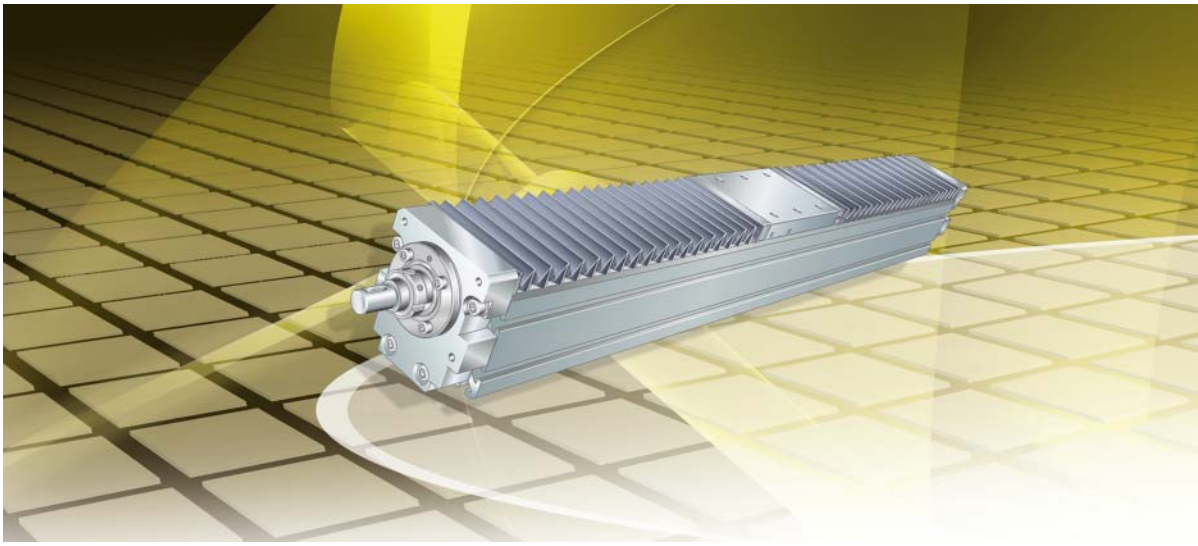

Actuators with ball screw drive

Actuators with ball screw drive

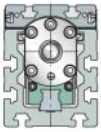

Basic design

One linear recirculating ball bearing and guideway assembly

Ball screw drive

MKUVE15..-KGT, MKUVE20..-KGT

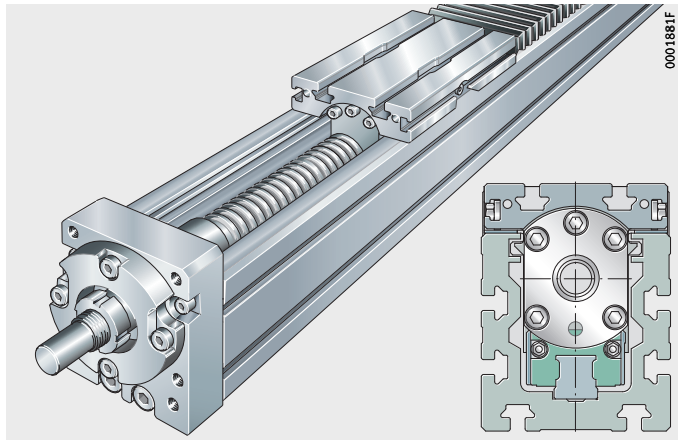

MKUSE25..-KGT

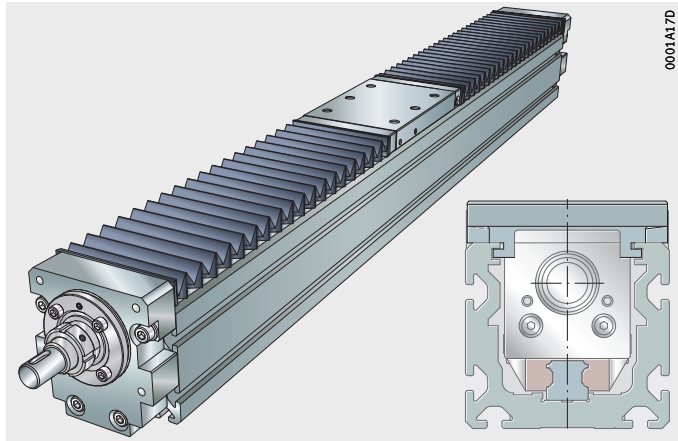

Actuators with ball screw drive

Features

Linear actuators MKUVE..-KGT and MKUSE..-KGT comprise:

- a carriage unit
- a linear recirculating ball bearing and guideway assembly
- a support rail
- a ball screw drive available with various pitch values
- one locating bearing and non-locating bearing unit
- two sets of bellows.

Actuators MKUVE..-KGT and MKUSE..-KGT are linear units for positioning, handling and machining tasks. They have a guidance system that is wear-resistant and clearance-free.
The drive elements are mounted in a self-supporting support rail. The actuators are supplied in a length specific to the application and in a configuration specific to the customer.

The ball screw drive with a driven spindle gives a balanced combination of economical and technical characteristics, even in the design with a single nut.

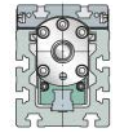

In the case of series MKUVE..-KGT, the carriage unit is guided by means of two four-row carriages of the linear recirculating ball bearing and guideway assembly KUVE arranged in series.

In the case of series MKUSE..-KGT, the carriage unit is guided by means of two six-row carriages of the linear recirculating ball bearing and guideway assembly KUSE arranged in series.

Accessories available for the actuators include fasteners and connectors, couplings and coupling housings and electric drive components such as motors, motor/gearbox units and controllers.

The advantage of the actuator MKUSE..-KGT is a significantly longer operating life under the same load compared with the actuator MKUVE..-KGT.

Designs

These linear actuators with a four-row linear recirculating ball bearing and guideway assembly (MKUVE) or six-row linear recirculating ball bearing and guideway assembly (MKUSE) are available in various designs, see table.

Available designs

Suffix	Description	Design
–	One driven carriage unit	Basic design
SPU	One spindle support	Standard
2SPU	Two spindle supports	Standard
WN2	Second, non-driven carriage unit	Standard
N	Fixing slots in carriage unit	Standard
OA	Without ball screw drive	Standard

Special designs are available by agreement. Examples of these are linear actuators:

- with several, non-driven carriage units
- with a linear recirculating ball bearing and guideway assembly and ball screw drive with anti-corrosion protection
- with bellows resistant to welding beads
- with a rolled ball screw spindle to accuracy class 25 μm/300 mm
- with a trapezoidal screw drive
- without bellows
- with an extended carriage unit
- with compressed air connections in the support rail
- with a locating bearing arrangement having increased load capacity
- with special machining.

Carriage unit

The carriage unit in series MKUVE..-KGT comprises a carriage housing made from anodised profiled aluminium, a lubrication distributor and the two KWVE carriages of the linear recirculating ball bearing and guideway assembly, *Figure 1* and table.

The carriage unit in series MKUSE25..-KGT comprises an anodised aluminium plate, two end plates and two KWSE carriages of the linear recirculating ball bearing and guideway assembly, see table.

If higher moment loads must be supported, the actuator is available with a second, non-driven carriage unit. It is connected to the driven carriage unit by means of the adjacent construction.

Lengths of carriage units

Series	Carriage unit length mm	Suffix
MKUVE15..-KGT	160	160
MKUVE20..-KGT	200	200
MKUSE25..-KGT	200	200

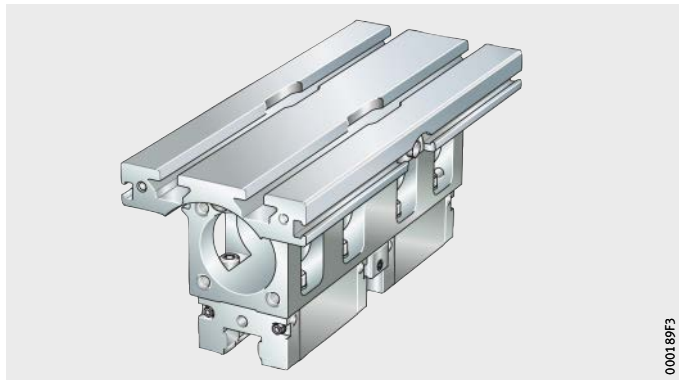

Figure 1
Carriage unit

Bellows The bellows fitted as standard protect the screw drive and guidance system against contamination. They are guided in the support rail and, as a result, the actuator is also suitable for applications involving an overhead arrangement.

Lubrication In the case of linear actuators of series MKUVE..-KGT, the carriage unit is equipped with a lubricant distributor.
This allows relubrication of the carriages and spindle nut.

In the case of the linear actuator of series MKUSE25..-KGT, the carriages and spindle nut are relubricated via the end plate on the locating bearing side of the carriage unit.

Sealing The carriages are sealed.

Location For location on the adjacent construction, the carriage unit in series MKUVE..-KGT has two T-slots, with centrally positioned filling slots.

For location on the adjacent construction, the carriage unit in series MKUSE25..-KGT has threaded holes.

Support rail unit

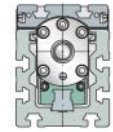

The support rail unit is a composite unit comprising a carrier profile made from anodised aluminium and the guideway of a four-row linear recirculating ball bearing and guideway assembly KUVE (actuator series MKUVE..-KGT) or of a six-row linear recirculating ball bearing and guideway assembly KUSE (actuator series MKUSE..-KGT). The linear recirculating ball bearing and guideway assemblies are preloaded clearance-free and run without stick-slip.

Since the support rail has very high bending rigidity, it can be used to span large gaps.

Support rail length The maximum length of the support rails in the case of MKUVE..-KGT is 5 850 mm. In the case of MKUVE..-KGT/50..-N, the maximum length of the support rail is 2 900 mm.

T-slots Support rails and carriage units have T-slots for standardised T-nuts. These are used in order to fix the actuators to the adjacent construction.

Ball screw drive

The spindle has a rolled thread and, depending on the diameter, up to four pitch values per spindle size are available, see table.

As standard, single nuts with an axial clearance dependent on the pitch are used, see table, page 382. Preloaded double nuts are available for the pitch values 5 mm, 10 mm and 20 mm.

The spindle is supported on the locating bearing side by an axial angular contact ball bearing ZKLN or ZKLF. The bearings are greased for life.

The screw drive and guidance system are protected against contamination by bellows.

One or two spindle supports can be fitted.

Ball screw drive variants

Screw drive variants		Suffix
Pitch	5 mm	5
	10 mm	10
	20 mm	20
	40 mm	40
	50 mm	50
Single flanged nut		F
Double nut		FM
Single nut (cylindrical)		M
Double nut (cylindrical)		MM
Without drive (no spindle), with bellows		OA

Permissible spindle speed

For data on the maximum spindle speed, see pages starting page 377.

For longer actuators, the permissible spindle speed can be increased by the use of one or two spindle supports (suffix SPU or 2SPU). These supports, arranged in pairs, can be moved as required. They are moved by the driven carriage unit.

Locating and non-locating bearing unit

The locating bearing unit supports the axial forces acting on the ball screw drive. It comprises an end plate made from anodised aluminium and an axial angular contact ball bearing ZKLN or ZKLF.

The non-locating bearing unit comprises an anodised aluminium end plate. This contains a needle roller bearing with an extended inner ring for compensation of possible length increases between the support rail and the ball screw drive.

Spindle support

Actuators MKUVE15..-KGT with a total length of more than 800 mm, MKUVE20..-KGT with a total length of more than 1 000 mm and MKUSE25..-KGT with a total length of more than 1 200 mm can be fitted with movable spindle supports (suffix SPU or 2SPU).

Drive elements

For the actuators, Schaeffler also offers components such as couplings, coupling housings and planetary gearboxes as well as servo motors and servo controllers, *Figure 2*.

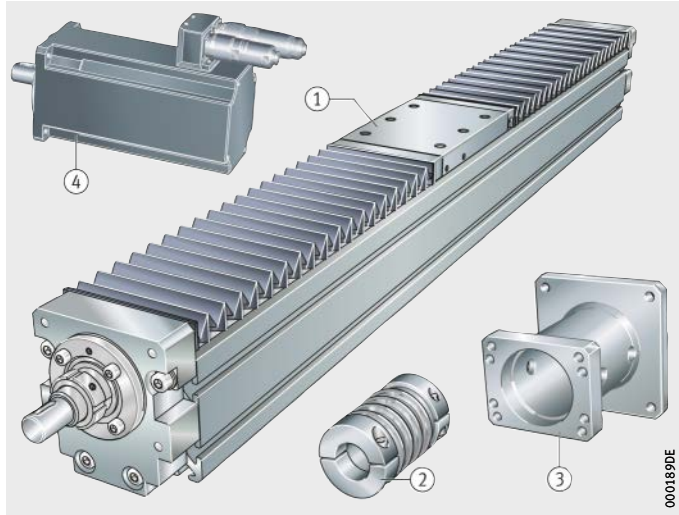

Example:
MKUSE25..-KGT
① Actuator with monorail guidance system and ball screw drive
② Coupling KUP
③ Coupling housing KGEH
④ Servo motor MOT

Figure 2
Linear actuator with drive elements

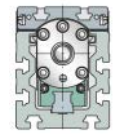

Proven drive combinations

The combination of the necessary drive components for vertical and horizontal applications as a function of the mass to be moved, the acceleration and the travel velocity of carriage units is shown on page 681.

The bearing load in the actuators must be checked; it is not taken into consideration in dimensioning of the motor.
For vertical mounting, motors with a holding brake must be used.

If different loading and kinematic criteria apply, the least favourable operating conditions should be used for calculation of the drive motor and design of the gearbox, coupling and servo controller.

Mechanical accessories

A large number of accessories are available for linear actuators with monorail guidance system and ball screw drive.
The allocation of accessories, see table, is valid if the data match the Technical principles, page 13, and the Design and safety guidelines, page 354.

Allocation

Linear actuator / size	MKUVE..-KGT-N	15	20	–
	MKUSE..-KGT	–	–	25
Fixing brackets, see page 811				
WKL-48×48×35		–	–	①
WKL-65×65×30-N		①	①	①
WKL-65×65×35		–	–	①
WKL-65×65×35-N		–	①	①
WKL-90×90×35-N		–	①	①
WKL-98×98×35		–	–	①
Clamping lugs, see page 829				
SPPR-10,5×20		①	–	–
SPPR-13,5×20		①	①	–
SPPR-24×20		①	–	–
SPPR-23×30		–	①	–
SPPR-28×30		–	–	①
T-nuts, see page 835				
MU-DIN 508 M4×5		①	–	–
MU-M3×5 (similar to DIN 508)		①	–	–
MU-DIN 508 M6×8		–	①	①
MU-M4×8 (similar to DIN 508)		–	①	①
T-nuts made from corrosion-resistant steel, see page 835				
MU-DIN 508 M4×5-RB		①	–	–
MU-DIN 508 M6×8-RB		–	①	①
T-bolts, see page 835				
SHR DIN 787-M5×5×25		①	–	–
SHR DIN 787-M8×8×32		–	①	①
Rotatable T-nuts, see page 836				
MU-M3×5-RHOMBUS		①	–	–
MU-M4×8-RHOMBUS		–	①	①
MU-M6×8-RHOMBUS		–	①	①
Positionable T-nuts, see page 836				
MU-M4×5-POS		①	–	–
MU-M5×5-POS		①	–	–
MU-M4×8-POS		–	①	①
MU-M5×8-POS		–	①	①
MU-M6×8-POS		–	①	①
MU-M8×8-POS		–	①	①

① Suitable.

Allocation
(continued)

Linear actuator / size	MKUVE..-KGT-N	15	20	–
	MKUSE..-KGT	–	–	25
Hexagon nuts, see page 837				
MU-ISO 4032 M4		①	①	–
MU-ISO 4032 M5		①	–	–
MU-ISO 4032 M8		–	①	①
T-strips, see page 837				
LEIS-M4/5-T-NUT-SB-ST		①	–	–
LEIS-M4/5-T-NUT-HR-ALU		②	–	–
LEIS-M6/8-T-NUT-SB-ST		–	①	①
LEIS-M8/8-T-NUT-SB-ST		–	①	①
LEIS-M6/8-T-NUT-HR-ST		–	②	②
LEIS-M6/8-T-NUT-HR-ALU		–	②	②
LEIS-M4/5-T-NUT-ST		②	–	–
LEIS-M6/8-T-NUT-ST		–	②	②
Connector sets (parallel connectors), see page 838				
VBS-PVB8		–	①	①
VBS-PVB8/10		–	①	①
Slot closing strips, see page 838				
NAD-5×5,7		①	–	–
NAD-8×4,5		–	①	①
NAD-8×11,5		–	①	①

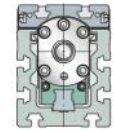

① Suitable.
② Suitable and T-strips must already have been inserted at the time of despatch.

Design and safety guidelines

Load carrying capacity and load safety factor

The load carrying capacities and load safety factors to be observed differ as a function of the mounting position, see page 12 and Product preselection matrix, page 340.

Deflection

The deflection of linear actuators is essentially dependent on the support spacing, the rigidity of the support rail, the adjacent construction and the bearing arrangement. As the rigidity of these components increases, the deflection of the actuators is reduced.

Diagrams

The diagram values are determined for a bearing arrangement or clamping which is in theory infinitely rigid and are subdivided into locating/non-locating and locating/locating bearing arrangements, starting *Figure 3*, page 355.

The deflection of the support rail is valid under the following conditions:

- support rail unit comprising carrier profile and guideway
- support spacings up to 5 850 mm
- introduction of the load at the centre of the carriage unit if this is at the centre point between the bearing points.

The diagrams represent guide values only for the deflection of the support rail, starting *Figure 7*, page 356. The effect of deflection on the rating life of the guidance system is not taken into consideration.

It is not possible to provide deflection diagrams for actuators with a second, non-driven carriage unit since there will be different spacings between the carriage units. In such cases, please consult the Schaeffler engineering service.

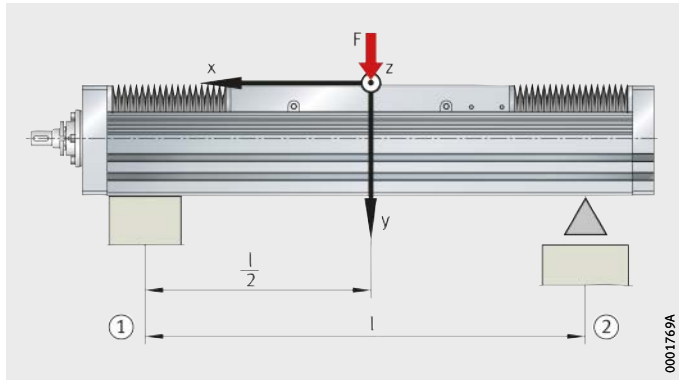

① Locating bearing arrangement
② Non-locating bearing arrangement

Figure 3
Deflection about the z axis

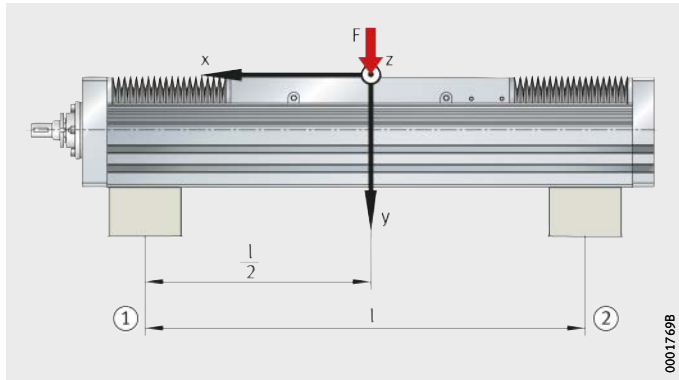

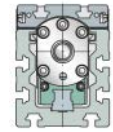

① Locating bearing arrangement
② Locating bearing arrangement

Figure 4
Deflection about the z axis

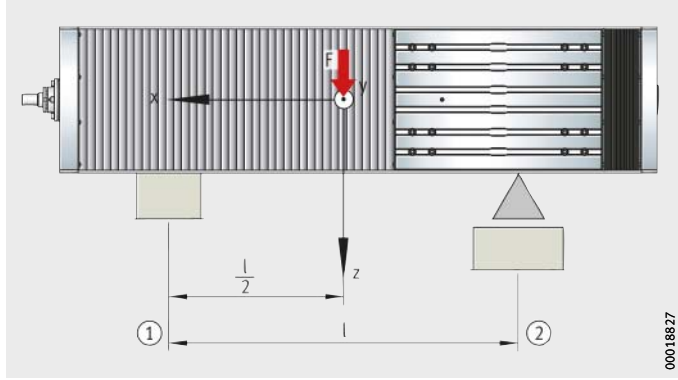

① Locating bearing arrangement
② Non-locating bearing arrangement

Figure 5
Deflection about the y axis

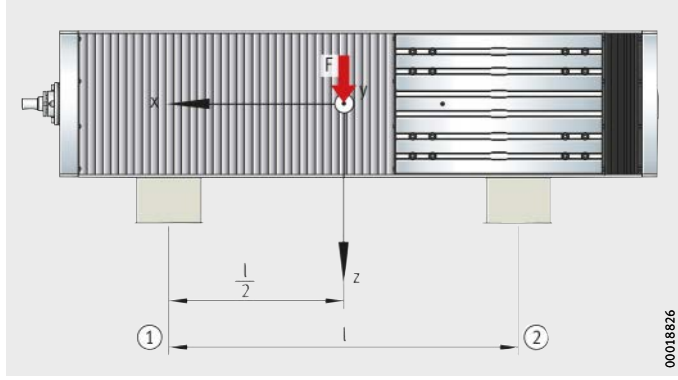

① Locating bearing arrangement
② Locating bearing arrangement

Figure 6
Deflection about the y axis

MKUVE15..-KGT

Locating/non-locating bearing arrangement
Δ_{vy} = deflection
l = support spacing

Figure 7
Deflection about the z axis

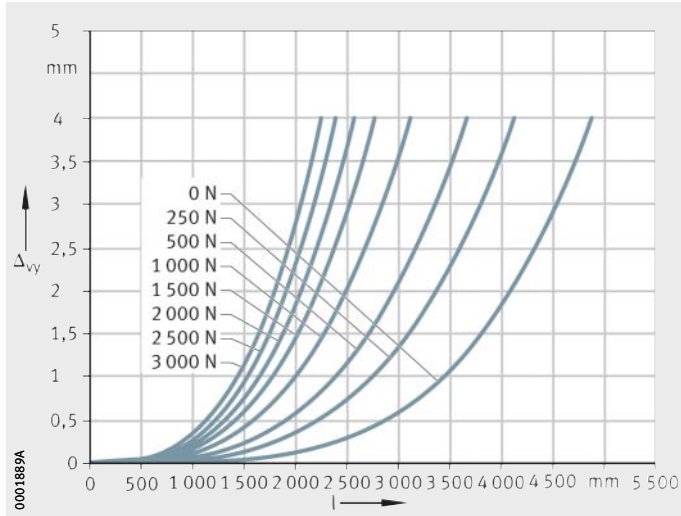

MKUVE15..-KGT

Locating/locating bearing arrangement
Δ_{vy} = deflection
l = support spacing

Figure 8
Deflection about the z axis

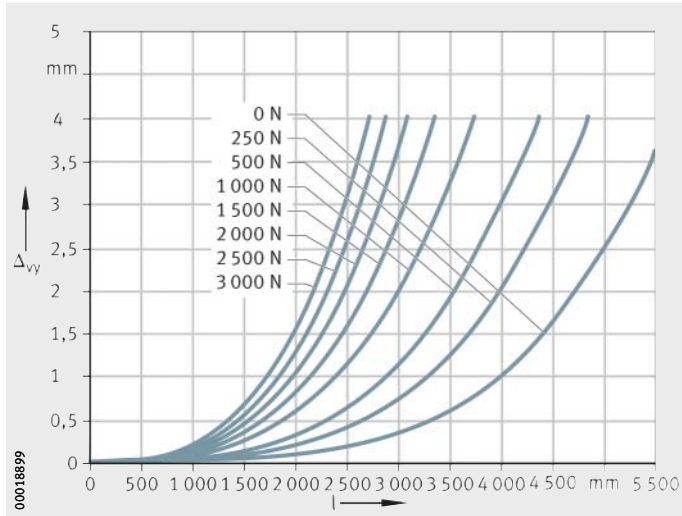

MKUVE15..-KGT

Locating/non-locating bearing arrangement
Δ_{vz} = deflection
l = support spacing

Figure 9
Deflection about the y axis

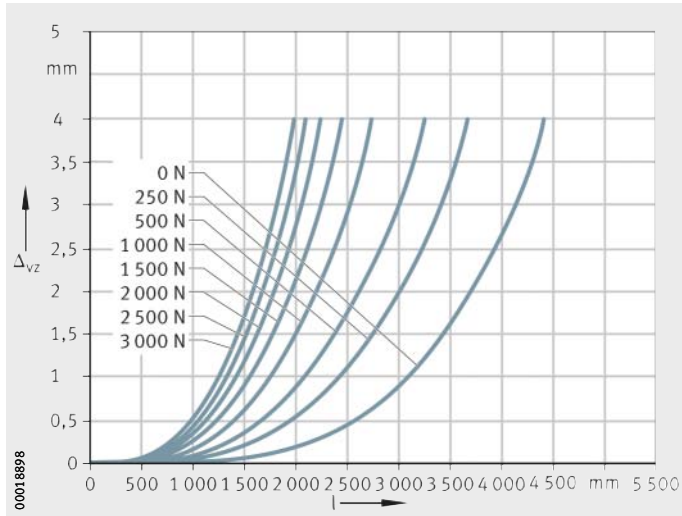

MKUVE15..-KGT

Locating/locating bearing arrangement
Δ_{vz} = deflection
l = support spacing

Figure 10
Deflection about the y axis

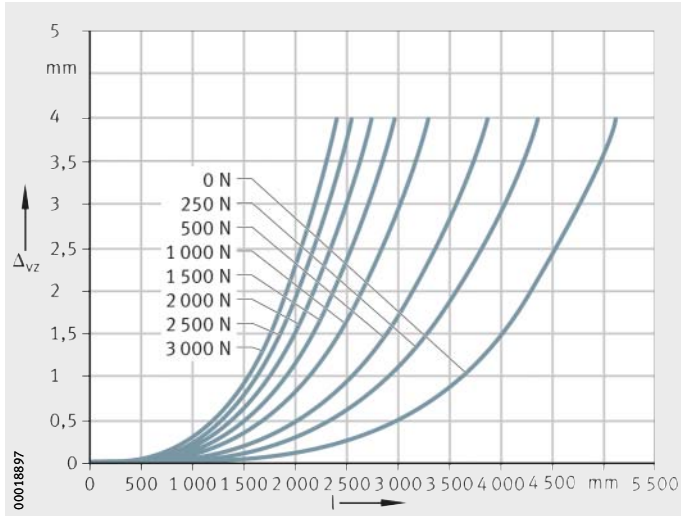

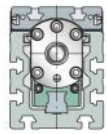

MKUVE20..-KGT

Locating/non-locating bearing arrangement
Δ_{vy} = deflection
l = support spacing

Figure 11
Deflection about the z axis

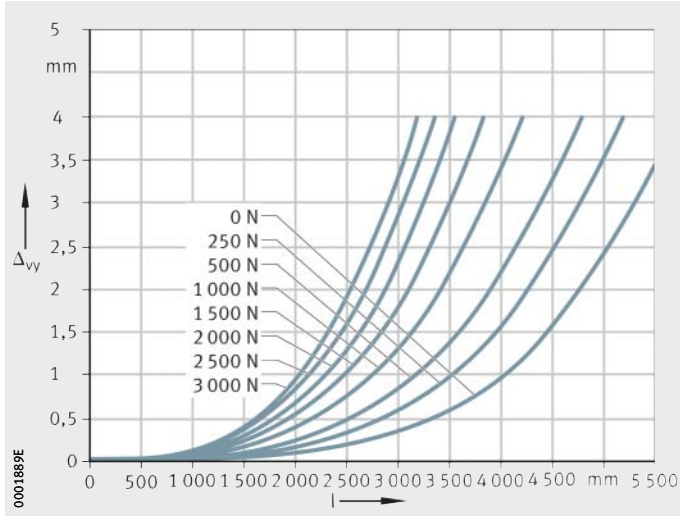

MKUVE20..-KGT

Locating/locating bearing arrangement
Δ_{vy} = deflection
l = support spacing

Figure 12
Deflection about the z axis

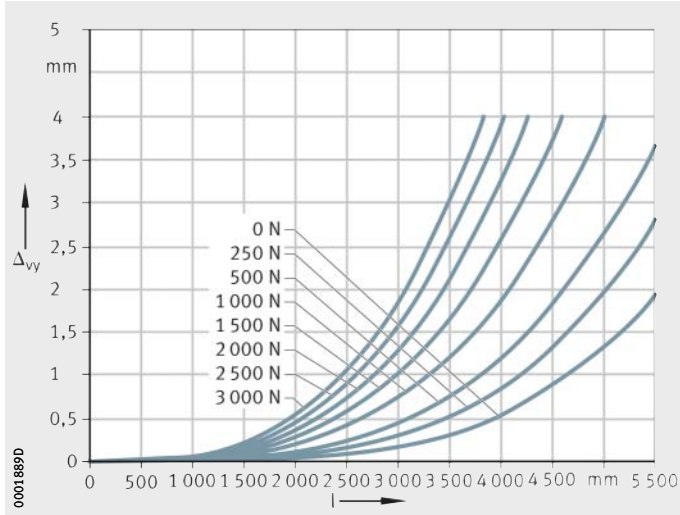

MKUVE20..-KGT

Locating/non-locating bearing arrangement
Δ_{vz} = deflection
l = support spacing

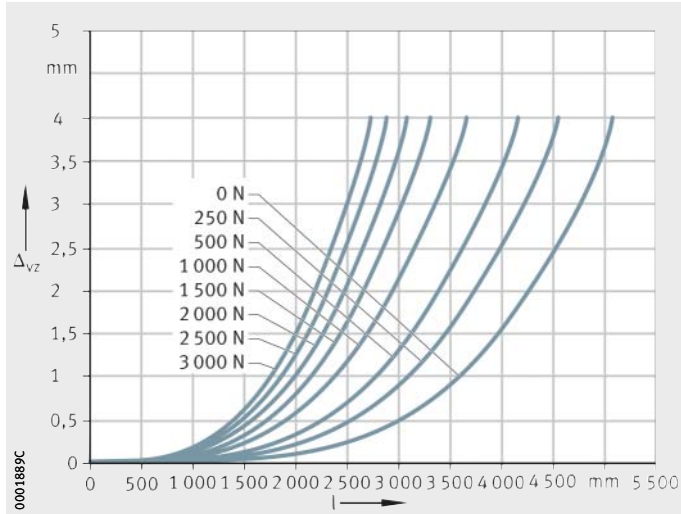

Figure 13
Deflection about the y axis

MKUVE20..-KGT

Locating/locating bearing arrangement
Δ_{vz} = deflection
l = support spacing

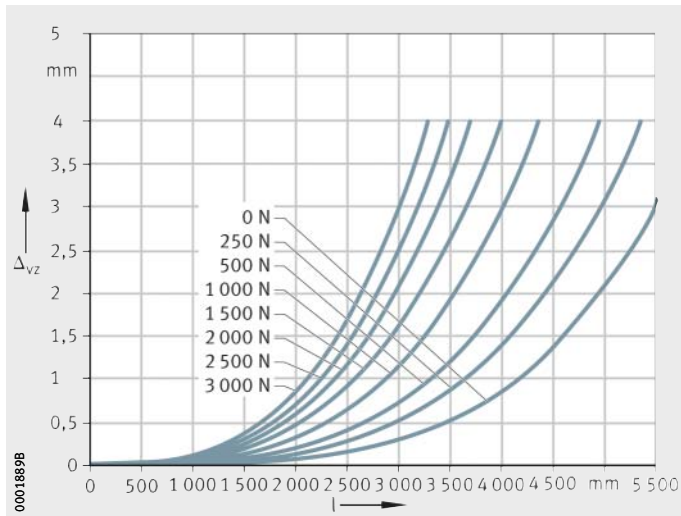

Figure 14
Deflection about the y axis

MKUSE25..-KGT

Locating/non-locating bearing arrangement
Δ_{vy} = deflection
l = support spacing

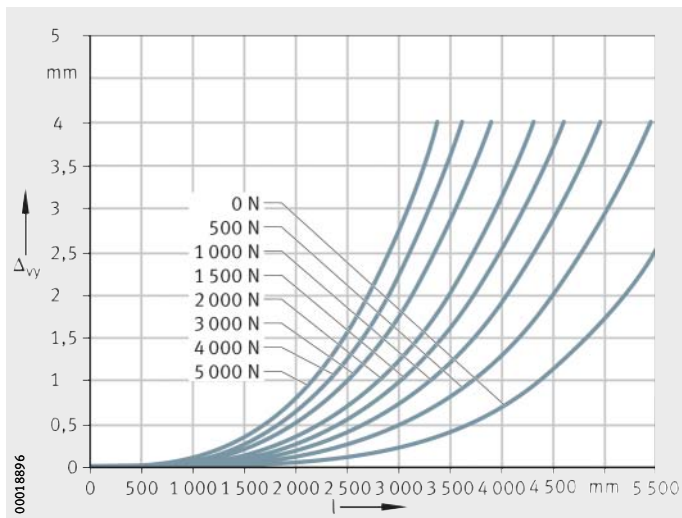

Figure 15
Deflection about the z axis

MKUSE25..-KGT

Locating/locating bearing arrangement
Δ_{vy} = deflection
l = support spacing

Figure 16
Deflection about the z axis

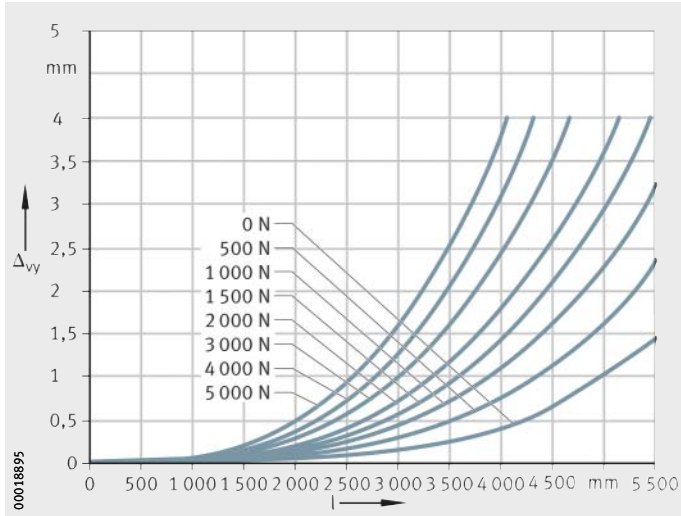

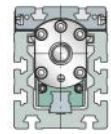

MKUSE25..-KGT

Locating/non-locating bearing arrangement
Δ_{vz} = deflection
l = support spacing

Figure 17
Deflection about the y axis

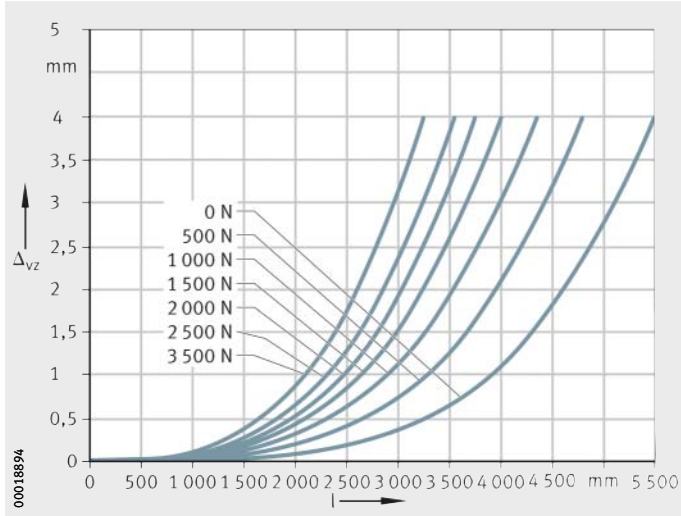

MKUSE25..-KGT

Locating/locating bearing arrangement
Δ_{vz} = deflection
l = support spacing

Figure 18
Deflection about the y axis

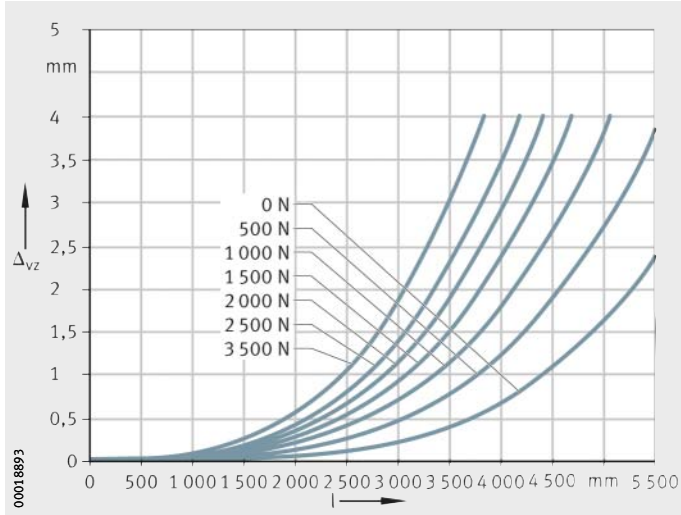

Idling drive torque

The idling drive torque M_0 of linear actuators with screw drive is calculated as a function of the spindle speed and the horizontal (M_{0h}) or vertical (M_{0v}) mounting position. The idling drive torque increases with increasing travel velocity.

MKUVE15..-KGT/..-F
MKUVE15..-KGT/..-FM

n = spindle speed
M_{0h} = idling drive torque

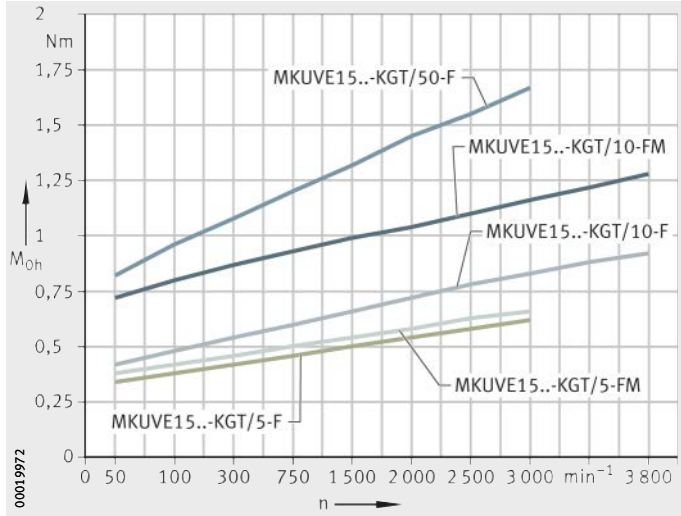

Figure 19
Idling drive torque
Horizontal mounting position

MKUVE15..-KGT/..-F
MKUVE15..-KGT/..-FM

n = spindle speed
M_{0v} = idling drive torque

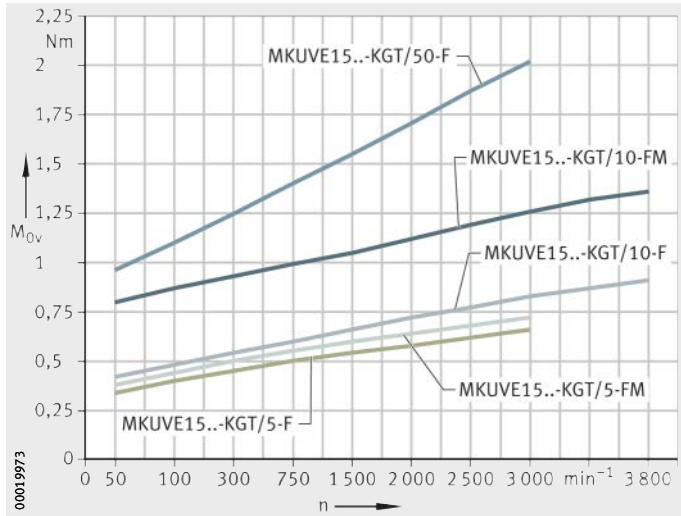

Figure 20
Idling drive torque
Vertical mounting position

MKUVE15..-KGT/..-F-WN2
MKUVE15..-KGT/..-FM-WN2

n = spindle speed
M_{0h} = idling drive torque

Figure 21
Idling drive torque
Horizontal mounting position

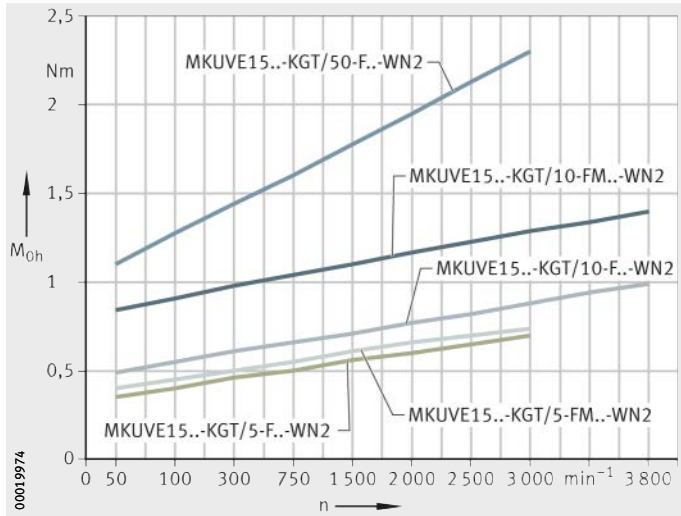

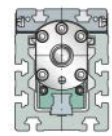

MKUVE15..-KGT/..-F-WN2
MKUVE15..-KGT/..-FM-WN2

n = spindle speed
M_{0v} = idling drive torque

Figure 22
Idling drive torque
Vertical mounting position

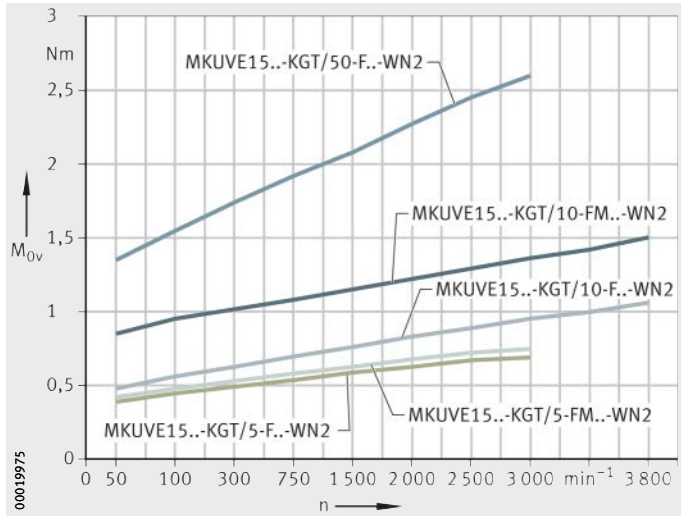

MKUVE20..-KGT/..-F
MKUVE20..-KGT/..-FM

n = spindle speed
M_{0h} = idling drive torque

Figure 23
Idling drive torque
Horizontal mounting position

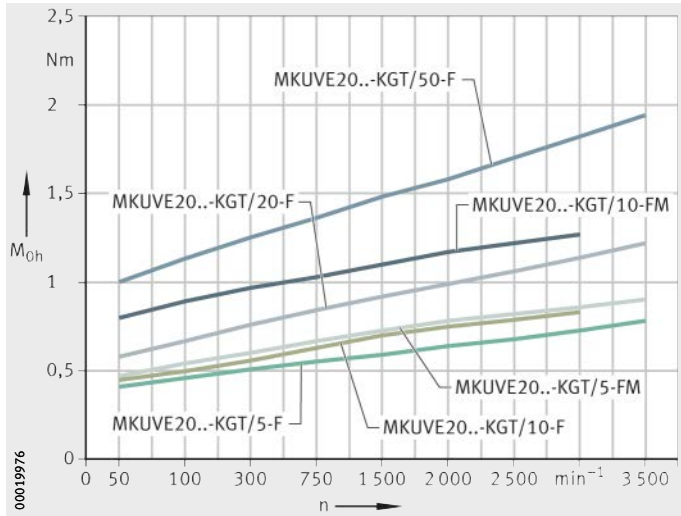

MKUVE20..-KGT/..-F
MKUVE20..-KGT/..-FM

n = spindle speed
M_{0v} = idling drive torque

Figure 24
Idling drive torque
Vertical mounting position

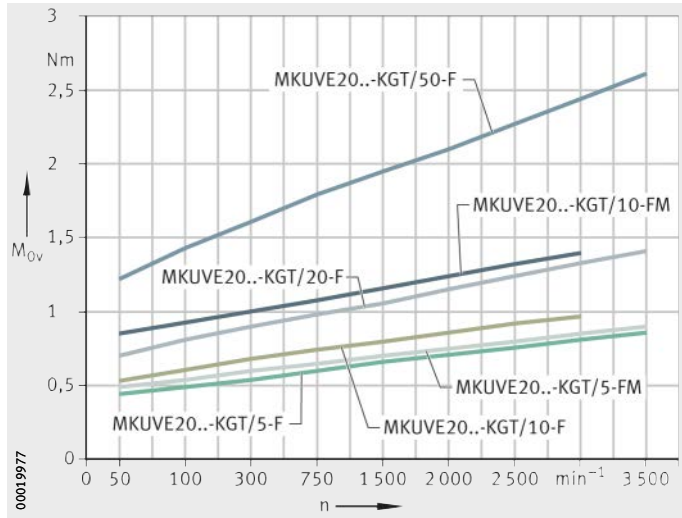

MKUVE20..-KGT/..-F..-WN2
MKUVE20..-KGT/..-FM..-WN2

n = spindle speed
M_{0h} = idling drive torque

Figure 25
Idling drive torque
Horizontal mounting position

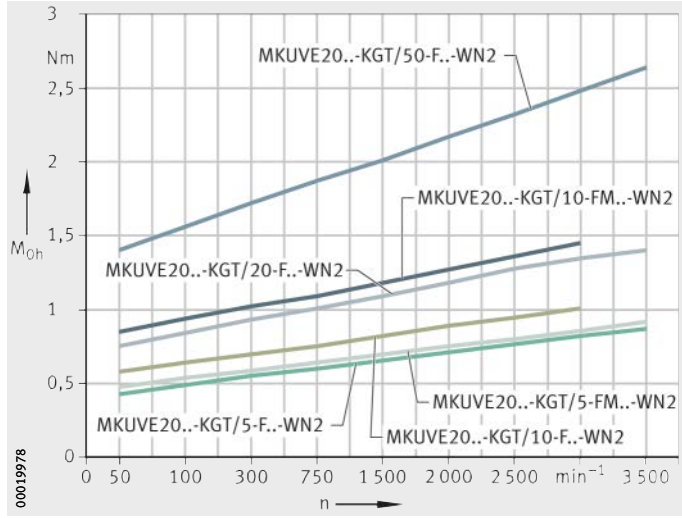

MKUVE20..-KGT/..-F..-WN2
MKUVE20..-KGT/..-FM..-WN2

n = spindle speed
M_{0v} = idling drive torque

Figure 26
Idling drive torque
Vertical mounting position

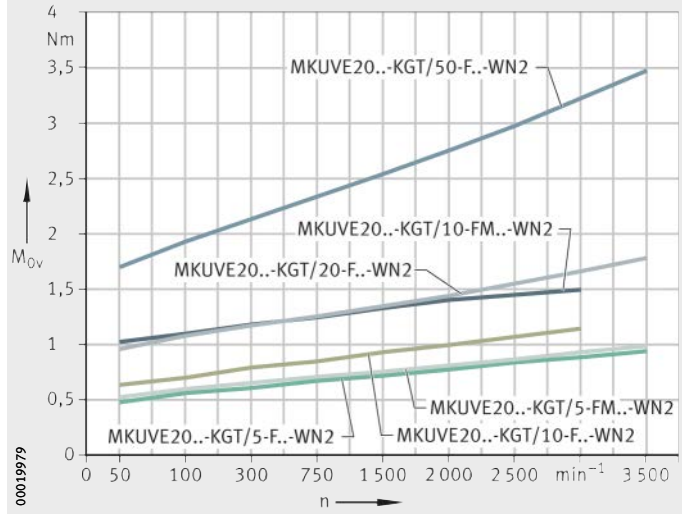

MKUSE25..-KGT/..-M
MKUSE25..-KGT/..-MM

n = spindle speed
M_{0h} = idling drive torque

Figure 27
Idling drive torque
Horizontal mounting position

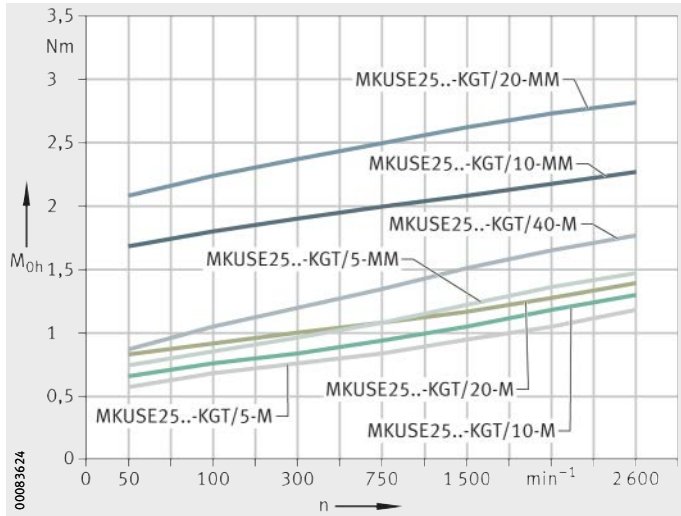

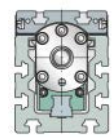

MKUSE25..-KGT/..-M
MKUSE25..-KGT/..-MM

n = spindle speed
M_{0v} = idling drive torque

Figure 28
Idling drive torque
Vertical mounting position

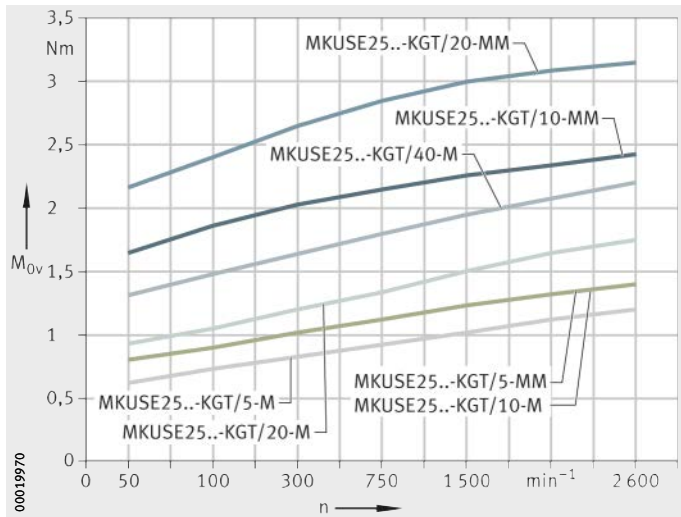

MKUSE25..-KGT/..-M..-WN2
MKUSE25..-KGT/..-MM..-WN2

n = spindle speed
M_{0h} = idling drive torque

Figure 29
Idling drive torque
Horizontal mounting position

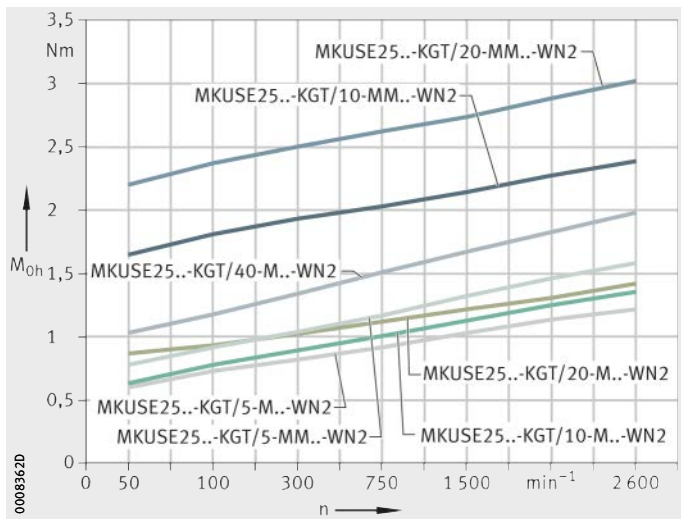

Length calculation of actuators

The length calculation of actuators is based on the required effective stroke length N_H. The effective stroke length N_H must be increased by the addition of safety spacing values on both sides of the travel distance.

The total length L_{tot} of the actuator is determined from the support rail length L_2 and the lengths of the end plates L_4 and L_5.
If two carriage units are present, both carriage unit lengths L and the spacing L_{x1} must be taken into consideration.

If spindle supports are used, size 25 must be calculated using a larger effective length factor, see table, page 366.

Parameters for length calculation

G_H mm
Total stroke length

N_H mm
Effective stroke length

S mm
Safety spacing, for minimum values see table, page 366

L mm
Length of carriage plate

L_2 mm
Length of support rail

L_4 mm
Length of end plate

L_5 mm
Length of end plate

L_{tot} mm
Total length of actuator

L_{x1} mm
Spacing between two carriage units

F_{BL} –
Effective length factor according to actuator type

$F_{BL\ SPU}$ –
Effective length factor for spindle support according to actuator type.

Total stroke length

The total stroke length G_H is determined from the required effective stroke length and the safety spacings, which must correspond to at least the spindle pitch P.

$$G_H = N_H + 2 \cdot S$$

Support rails

Actuators with monorail guidance system and ball screw drive are only available with a single-piece support rail.
The maximum length of a support rail is 5 850 mm.
In the case of actuators MKUVE15..-KGT/50, the maximum length of the support rail is 2 900 mm.

Spacing L_{x1} between carriage units

The minimum spacing $L_{x1\ min}$ between two carriage units is 20 mm.

Total length L_{tot} and support rail length L_2

The following equations are designed for one and two carriage units. The parameters and their position can be found in *Figure 30*, *Figure 31* and the table, page 366. If more than two carriage units are present, please contact us.

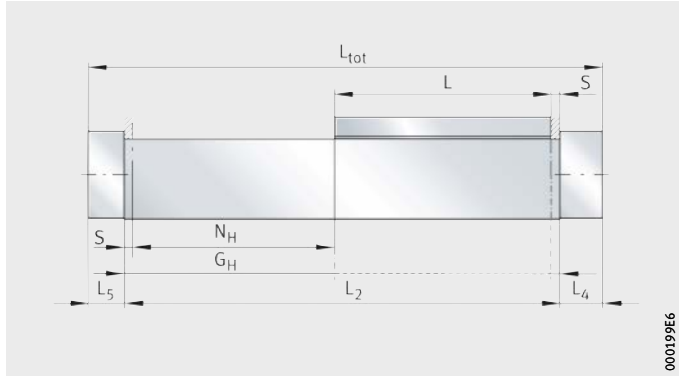

Figure 30
Length parameters for one carriage unit

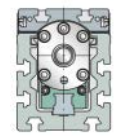

One carriage unit with bellows

$$L_2 = G_H \cdot F_{BL} + L + 25$$

Total length with drive

$$L_{tot} = L_2 + L_4 + L_5$$

Total length without drive

$$L_{tot} = L_2 + 2 \cdot L_5$$

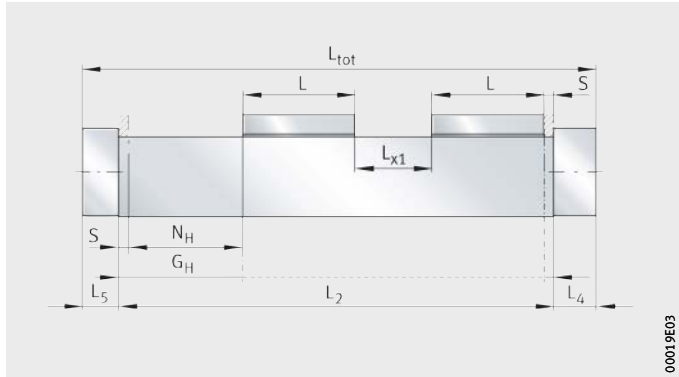

Figure 31
Length parameters for two carriage units

Two carriage units with bellows

$$L_2 = G_H \cdot F_{BL} + 2 \cdot L + L_{x1} + 25$$

Total length with drive

$$L_{tot} = L_2 + L_4 + L_5$$

Total length without drive

$$L_{tot} = L_2 + 2 \cdot L_5$$

Length parameters

Designation	L mm	L_4 mm	L_5 mm	S mm	F_{BL}	$F_{BL\ SPU}$
MKUVE15-160-KGT/5-N	160	25	25	5	1,2	1,2
MKUVE15-160-KGT/10-N				10	1,2	1,2
MKUVE15-160-KGT/50-N				50	1,2	1,2
MKUVE15-160-KGT-OA-N	160	–	25	10	1,2	–
MKUVE20-200-KGT/5-N	200	28	28	5	1,17	1,17
MKUVE20-200-KGT/10-N				10	1,17	1,17
MKUVE20-200-KGT/20-N				20	1,17	1,17
MKUVE20-200-KGT/50-N				50	1,17	1,17
MKUVE20-200-KGT-OA-N	200	–	28	10	1,17	–
MKUSE25-200-KGT/5	200	32	32	5	1,2	1,23
MKUSE25-200-KGT/10				10	1,2	1,23
MKUSE25-200-KGT/20				20	1,2	1,23
MKUSE25-200-KGT/40				40	1,2	1,23
MKUSE25-200-KGT-OA	200	–	32	10	1,2	–

Effective length of bellows

The effective length of bellows is the length occupied by the bellows in the fully compressed state, *Figure 32*, equations and table.

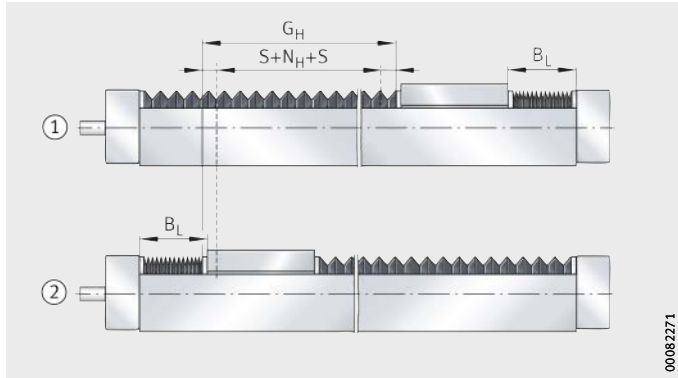

① Carriage unit against the right end stop
② Carriage unit against the left end stop

Figure 32
Effective length calculation

Effective length calculation without spindle support

$$B_L = \frac{G_H \cdot (F_{BL} - 1) + 25}{2}$$

Effective length calculation with spindle support

$$B_L = \frac{G_H \cdot (F_{BL\ SPU} - 1) + 25}{2}$$

B_L mm
Effective length of bellows

F_{BL} –
Effective length factor according to actuator type, see table

$F_{BL\ SPU}$ mm
Effective length factor for spindle support according to actuator type.

Mass calculation

The total mass of an actuator is calculated from the mass of the actuator without a carriage unit, the carriage unit and the special design: second carriage unit (WN2), *Figure 33*. Insert the values from the table in the following equation. The values m_{LAW} and m_{BOL} are mandatory.

$$m_{tot} = m_{LAW} + m_{BOL} + m_3$$

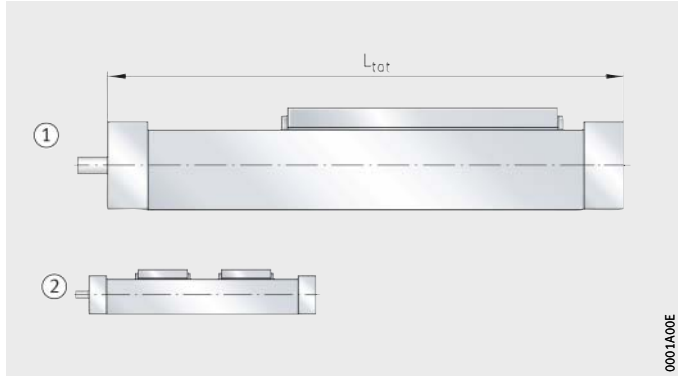

① Basic design
② Second carriage unit (WN2)

Figure 33
Basic and additional designs

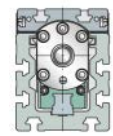

Values for mass calculation

Designation	Mass		
	Carriage unit m_{LAW} ≈kg	Design m_3 WN2 ≈kg	Actuator without carriage unit m_{BOL} ≈kg
MKUVE15-160-KGT..-N	1,16	0,87	$(L_{tot} - 50) \cdot 0{,}0073 + 0{,}87$
MKUVE15-160-KGT-OA..-N	0,87	0,87	$(L_{tot} - 50) \cdot 0{,}0073 + 0{,}59$
MKUVE20-200-KGT..-N	2,10	1,69	$(L_{tot} - 56) \cdot 0{,}0119 + 2{,}18$
MKUVE20-200-KGT-OA..-N	1,69	1,69	$(L_{tot} - 56) \cdot 0{,}0119 + 1{,}27$
MKUSE25-200-KGT	4,65	3,37	$(L_{tot} - 64) \cdot 0{,}0191 + 4{,}3$
MKUSE25-200-KGT-OA	3,37	3,37	$(L_{tot} - 64) \cdot 0{,}0191 + 1{,}93$

Lubrication

The guidance systems and ball screw drive in linear actuators are initially greased with a high quality lithium complex soap grease KP2P-30 according to DIN 51825 and must be relubricated during operation.

The carriages in the actuators are sealed, have an initial greasing and can be relubricated. The bearings fitted, the double row axial angular contact ball bearing (locating bearing) and the integrated needle roller bearing are sealed and lubricated for life.

Structure of suitable greases

Greases suitable for the linear recirculating ball bearing and guideway assemblies have the following composition:

- lithium soap or lithium complex soap grease with base oil having a mineral oil base
- special anti-wear additives for loads $C/P < 8$, indicated by “P” in the DIN designation
- base oil viscosity ISO VG 68 to ISO VG 100
- consistency in accordance with NLGI grade 2.

If different greases are used, their miscibility and compatibility must be checked first.

Relubrication intervals

The relubrication intervals are essentially dependent on the following factors:

- the travel velocity of the actuator carriage unit
- the load
- the operating temperature
- the stroke length
- the environmental conditions and environmental influences
- the mounting position.

The cleaner the environment, the lower the lubricant consumption.

Calculation of the relubrication interval

Since it is not possible to calculate all the influencing factors, the time at which relubrication must be carried out and the quantity of lubricant which must be used can only be precisely determined under actual operating conditions. If no precise data are available, the value for the relubrication quantity for many applications can be taken from table, page 369.

An approximation equation can be used, however, to determine a guide value for the relubrication interval for many applications. For calculation of the grease operating life, see page 54.

For the ball screw drive, a relubrication interval of 200 h to 300 h is sufficient under normal operating conditions.

Relubrication must be carried out, irrespective of the result of this calculation, no more than 1 year after the last lubrication.

Fretting corrosion is a consequence of lubricant starvation and is visible as a reddish discolouration of the rolling element raceways. Lubricant starvation can lead to permanent damage to the system and therefore to its failure. It must be ensured that the lubrication intervals are reduced accordingly in order to prevent fretting corrosion.

When calculating the relubrication interval, the grease operating life must also be checked. This is restricted to a maximum of 3 years due to the ageing resistance of the grease. It is the user's responsibility to consult the lubricant manufacturer.

Relubrication quantities

Relubrication should be carried out wherever possible with several partial quantities at various times instead of the complete quantity at the time of the relubrication interval. Relubrication quantities, see table.

Grease quantities

Linear actuator	Relubrication quantity per driven carriage unit, lubrication nipple and longitudinal side ≈g	Relubrication quantity per non-driven carriage unit, lubrication nipple and longitudinal side ≈g
MKUVE15-160-KGT/5-F MKUVE15-160-KGT/5-FM MKUVE15-160-KGT/10-F MKUVE15-160-KGT/10-FM MKUVE15-160-KGT/50-F	2 to 3	1 to 2
MKUVE20-200-KGT/5-F MKUVE20-200-KGT/5-FM MKUVE20-200-KGT/10-F MKUVE20-200-KGT/10-FM MKUVE20-200-KGT/20-F MKUVE20-200-KGT/20-FM MKUVE20-200-KGT/50-F	3 to 4	2 to 3
MKUSE25-200-KGT/5-M MKUSE25-200-KGT/5-MM MKUSE25-200-KGT/10-M MKUSE25-200-KGT/10-MM MKUSE25-200-KGT/20-M MKUSE25-200-KGT/20-MM MKUSE25-200-KGT/40-M	8 to 10	6 to 7

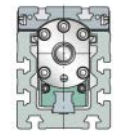

Relubrication procedure

Relubrication should be carried out whilst the carriage unit is moving and warm from operation over a minimum stroke length corresponding to one carriage unit length.

During lubrication, it must be ensured that the grease gun, grease, lubrication nipple and the environment of the lubrication nipple are clean.

The lubrication method involves loss of lubricant. The used lubricant must be collected and disposed of by methods that help to protect the environment.

The use of lubricants is governed by national regulations for environmental protection and occupational safety as well as information from the lubricant manufacturers. These regulations must be observed in all cases.

Lubrication nipples

In the case of actuators MKUVE..-KGT and MKUSE..-KGT, relubrication of the integrated guidance system and the ball screw drive is carried out exclusively via countersunk funnel type lubrication nipples NIP DIN 3405-A M6, *Figure 34* and *Figure 35* in the longitudinal sides of the carriage unit.

MKUVE..-KGT

Valid with the exception of MKUSE25..-KGT
① NIP DIN 3405-A M6

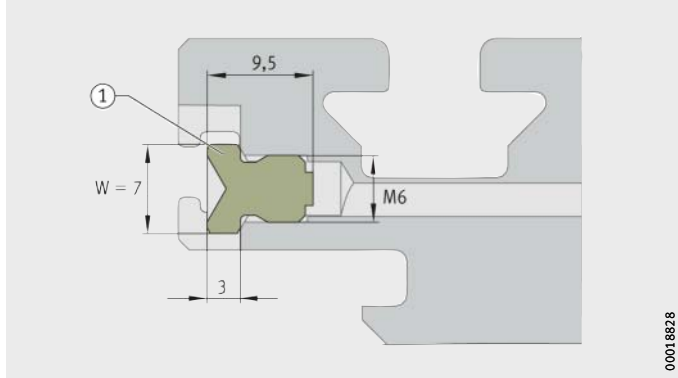

Figure 34
Mounting situation

MKUSE25..-KGT

① NIP DIN 3405-A M6

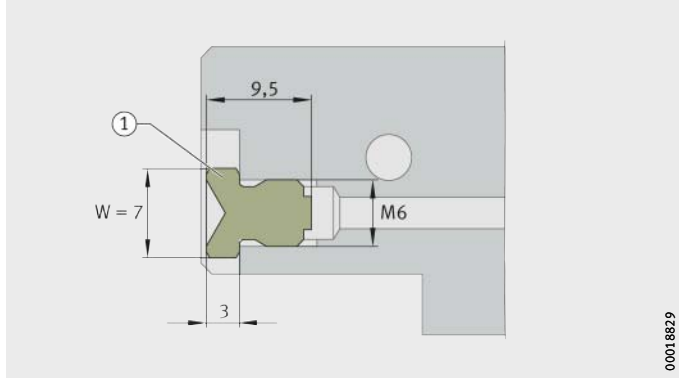

Figure 35
Mounting situation

The carriage unit can be connected to a semi-automatic or fully automatic central lubrication system. In this case, the funnel type lubrication nipple must be replaced by a straight or angled screw-in connector with a M6×1 thread. The central lubrication system is connected by means of pipes or hoses.

Relubrication points

The carriage and ball screw nut have funnel type lubrication nipples NIP DIN 3405-A M6 on the right or left longitudinal side of each carriage unit. These can be used for relubrication, *Figure 36*, *Figure 37*, *Figure 38*, *Figure 39* and table, page 372.

MKUVE15..-KGT
MKUVE20..-KGT

① NIP DIN 3405-A M6

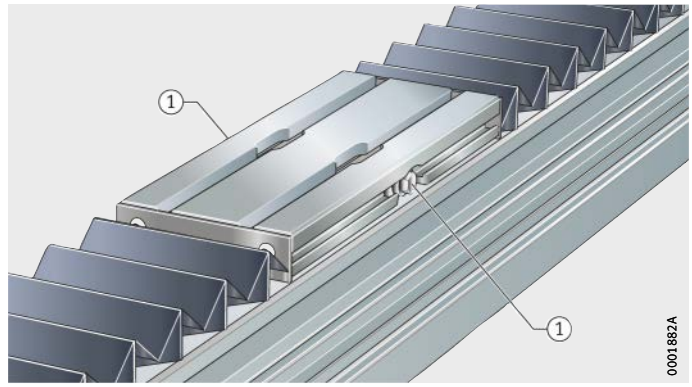

Figure 36
Lubrication points

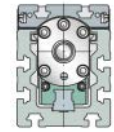

MKUVE15..-KGT
MKUVE20..-KGT

① NIP DIN 3405-A M6
② Lubrication duct

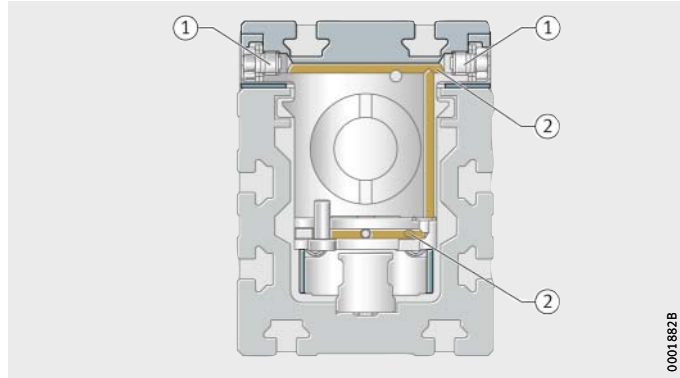

Figure 37
Lubrication ducts in the carriage unit

During lubrication of actuators, all lubrication points on one longitudinal side of a carriage unit must always be provided with lubricant.

Position of relubrication points

Designation	Mounting dimensions		
	S_{56} mm	h_{56} mm	l_{56} mm
MKUVE15-160..-KGT	26	10,8	71
MKUVE20-200..-KGT	26	13,5	100
MKUSE25-200..-KGT	15	15,5	9

MKUVE15..-KGT
MKUVE20..-KGT

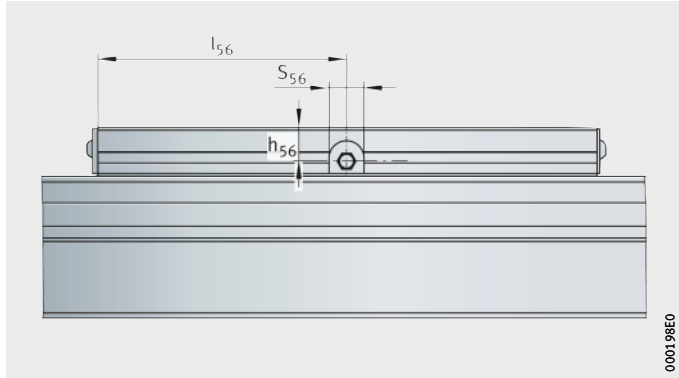

Figure 38
Lubrication points

MKUSE25..-KGT

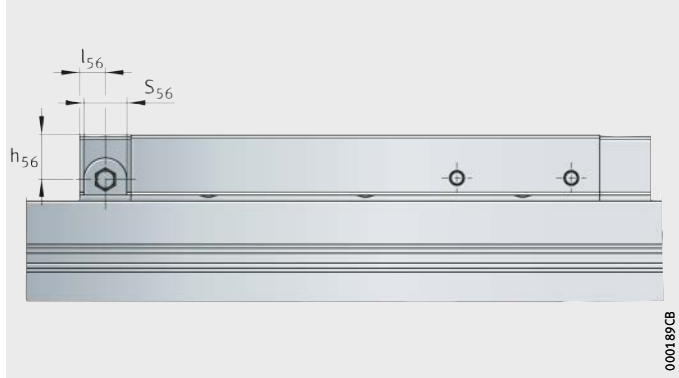

Figure 39
Lubrication points

T-slots

The T-slots in the support rail and the carriage unit are designed for T-bolts according to DIN 787 and T-nuts according to DIN 508 (with the exception of T-slot size 4,5), *Figure 40*.

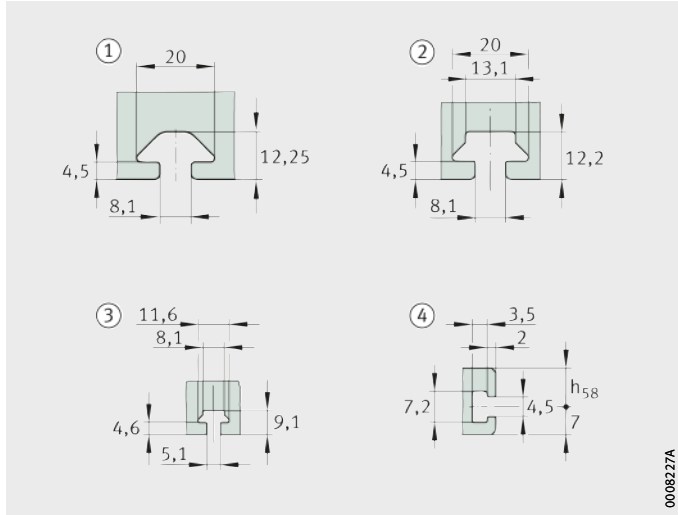

① T-slot size 8, type A
② T-slot size 8, type B
③ T-slot size 5
④ T-slot size 4,5 for hexagon nuts M4, ISO 4032

Figure 40
Sizes of T-slots in support rail and carriage unit

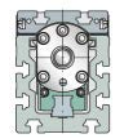

Dimensions of T-slots

Designation	Support rail		Carriage unit		
	Lateral	Bottom	Top	Lateral	h_{58} mm
MKUVE15..-KGT	③	③	③	④	9
MKUVE20..-KGT	②	②	②	④	12
MKUSE25..-KGT	①	①	–	–	–

Filling openings

The filling openings in the non-locating bearing units of MKUVE15..-KGT and MKUVE20..-KGT are used for the insertion of T-nuts and T-bolts in the T-slots of the support rail, *Figure 41*. In the case of MKUSE25..-KGT, filling openings are located in the locating and non-locating bearing unit.

The filling openings in the carriage unit of MKUVE..-KGT for the T-nuts (top) are located at the height of the lubrication nipple, *Figure 38*, page 372. The hexagon nuts M4 (lateral) are introduced into the lateral T-slots via the recess for the lubrication nipple.

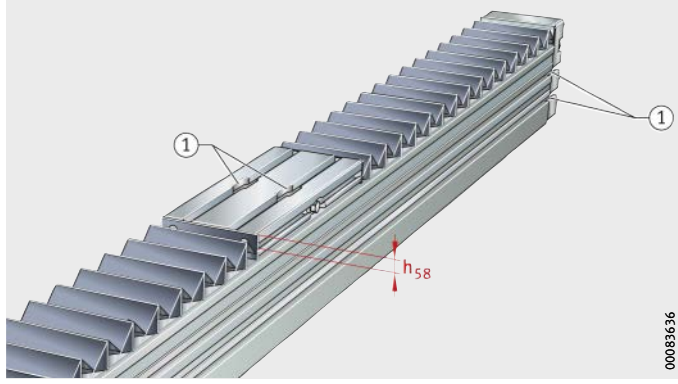

① Filling opening

Figure 41
Filling opening in the support rail

Connectors for switching tags

Switching tags can be screw mounted to the carriage unit in order to activate switches in the adjacent construction. The position and size are dependent on the size, *Figure 42* and *Figure 43*.

MKUVE15..-KGT
MKUVE20..-KGT

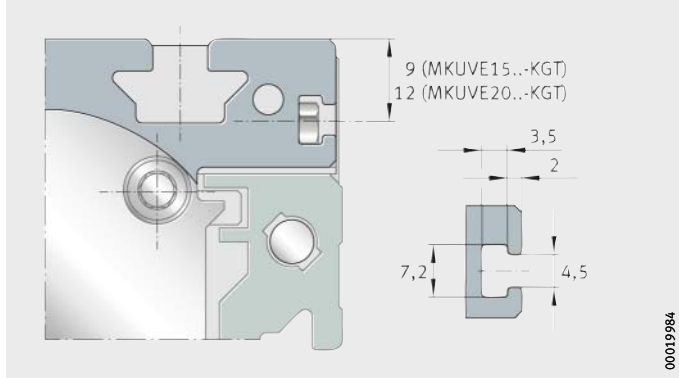

Figure 42
T-slots for switching tags on the carriage unit (sizes 15 and 20)

MKUSE25..-KGT

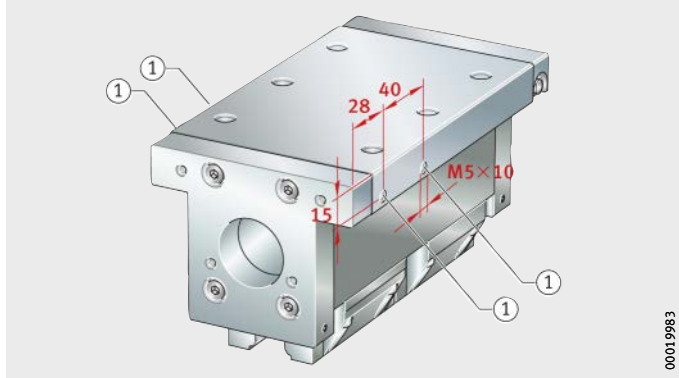

① Hole in carriage unit

Figure 43
Connectors for switching tags on the carriage unit (size 25)

Maximum permissible spindle speed

Screw drives must not be allowed to run in the critical speed range.

The critical speed is essentially dependent on the following factors:

- spindle length
- spindle diameter
- spindle bearing arrangement
- mounting method.

The carriage unit velocity v is determined from the spindle speed n and the spindle pitch P. The limit values for velocities must be observed, see page 341.

For calculation of the carriage unit velocity, the following applies:

$$v = \frac{n \cdot P}{60 \cdot 1000}$$

v Carriage unit velocity	m/s
n Spindle speed	min^{-1}
P Spindle pitch.	mm

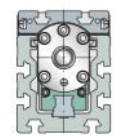

Diagrams

The diagram show the relationship for individual series and sizes between the critical speed and the spindle length, *Figure 44*.
The diagram takes account of the effective length (B_L) of the bellows cover. Definition of the effective length, see page 366.

The diagram is valid for linear actuators with and without spindle supports, *Figure 44*.

The values apply to a ball screw drive operating in a tensile direction.

MKUVE..-KGT
MKUSE..-KGT

n = maximum permissible spindle speed
L_2 = support rail length
① Without spindle support
② One spindle support
③ Two spindle supports

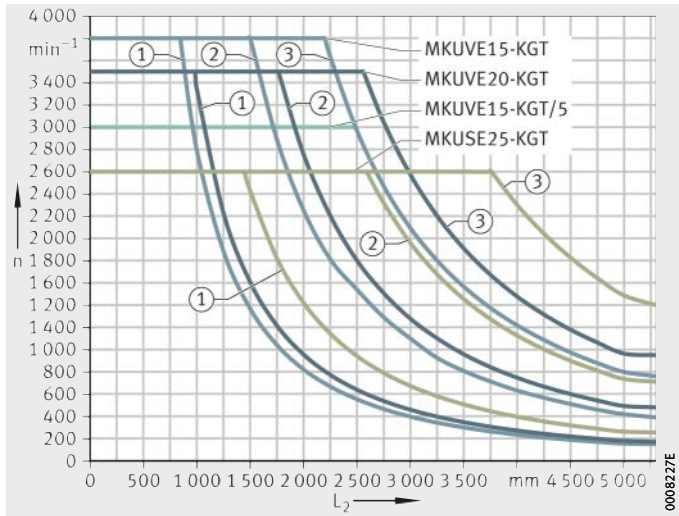

Figure 44
Maximum permissible spindle speed

Kinematic operating limits

Maximum velocities are determined as a function of the critical spindle speed, see table. The limiting speed of the bearings can also restrict the spindle speed and thus the velocity.

Kinematic operating limits

Actuator	Acceleration a m/s²	Maximum velocity v m/s	Maximum spindle speed n min⁻¹
MKUVE15-160-KGT/5-F	20	0,25	3 000
MKUVE15-160-KGT/5-FM	10		
MKUVE15-160-KGT/10-F	20	0,63	3 800[1)]
MKUVE15-160-KGT/10-FM	10		
MKUVE15-160-KGT/50-F	20	2,5	3 000
MKUVE20-200-KGT/5-F	20	0,29	3 500[1)]
MKUVE20-200-KGT/5-FM	10		
MKUVE20-200-KGT/10-F	20	0,5	3 000
MKUVE20-200-KGT/10-FM	10		
MKUVE20-200-KGT/20-F	20	1,16	3 500[1)]
MKUVE20-200-KGT/50-F	20	2,9	3 500[1)]
MKUSE25-200-KGT/5-M	20	0,215	2 600[1)]
MKUSE25-200-KGT/5-MM	10		
MKUSE25-200-KGT/10-M	20	0,43	
MKUSE25-200-KGT/10-MM	10		
MKUSE25-200-KGT/20-M	20	0,86	
MKUSE25-200-KGT/20-MM	10		
MKUSE25-200-KGT/40-M	20	1,73	

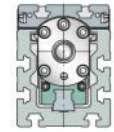

1) Restricted by the limiting speed of the locating bearing with grease lubrication.

Mounting position and mounting arrangement

Due to their construction and the linear guidance system fitted, actuators are suitable for all mounting positions and mounting arrangements. Possible mounting positions are shown in *Figure 45*, *Figure 46* and *Figure 47*.

The actuators can be used in the “common” horizontal mounting position and also in a vertical mounting position.

Mounting of actuators with a carriage unit to one side or suspended overhead is possible. In such cases, please consult the Schaeffler engineering service.

The ball screw drives fitted in these actuators are not self-locking. The carriage unit and load must be secured against autonomous travel or dropping if the actuators are used in a vertical or tilted mounting position. This can be achieved, for example, by means of a brake or counterweight. The drop guard must function in manual operation as well as in motor operation, especially if the motor has no current.

Safety guidelines, especially in relation to personal protection, must be observed.

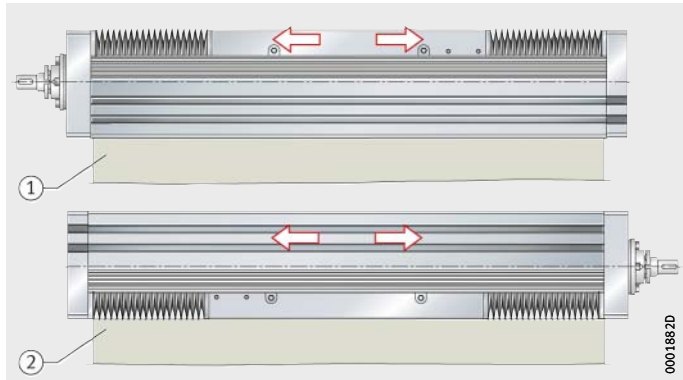

① Movable carriage unit
② Stationary carriage unit

Figure 45
Movable or stationary carriage unit

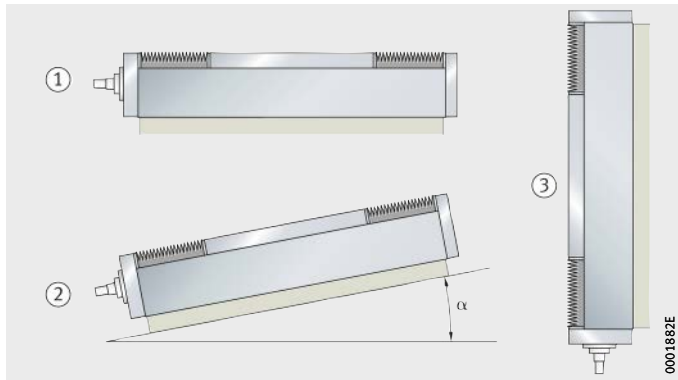

① Horizontal
② Tilted
③ Vertical

Figure 46
Mounting positions

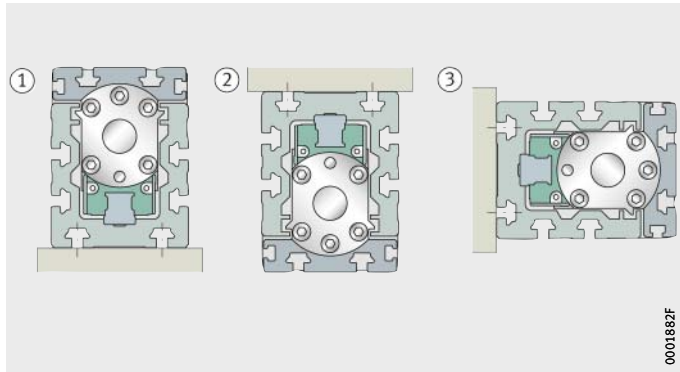

① Mounting position 0°
② Mounting position 180°
③ Mounting position 90°

Figure 47
Mounting positions

Mounting

In most applications, an actuator is mounted in two steps:

- location of the support rail on the adjacent construction
- mounting of the components to be moved on the carriage unit or carriage units.

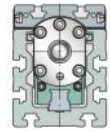

Interchange of actuator components

For the fitting and assembly of actuator components, a fitting and maintenance manual is available for each series of actuator. Please consult the Schaeffler engineering service.

Maintenance

Failure to carry out maintenance, incorrect maintenance, assembly errors and lubrication errors as well as inadequate protection against contamination can lead to premature failure of actuators.

Maintenance work is restricted in general to relubrication, cleaning and regular visual inspection for damage.

Maintenance intervals, especially the intervals between relubrication, are influenced by the following factors:

- the travel velocity of the carriage unit
- the load
- the temperature
- the stroke length
- the environmental conditions and influences.

Guidance parts relevant to function must be greased and supplied with lubricant via appropriate lubrication points.

Cleaning

If heavy contamination is present, actuators must be cleaned in order to ensure reliable function. Suitable cleaning tools include paintbrushes, soft brushes and soft cloths.

Abrasives, petroleum ether and oils must not be used.

Accuracy
Length tolerances

The length tolerances of actuators are shown in *Figure 48* and the table. The data are valid for all actuators described in this chapter.

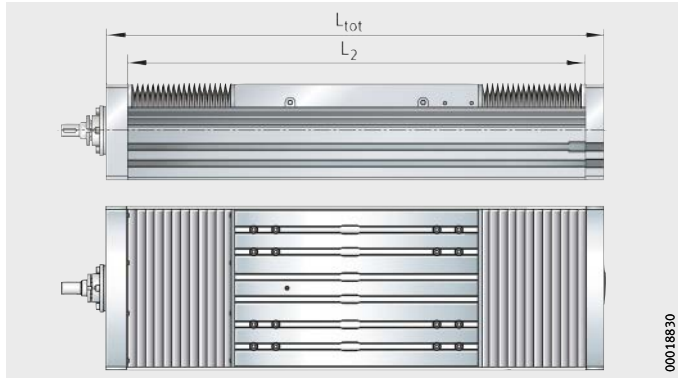

L_{tot} = total length
L_2 = length of support rail

Figure 48
Length tolerances

Tolerances

Total length of actuator L_{tot} mm	Tolerance mm
$L_{tot} < 1\,000$	±2
$1\,000 \leqq L_{tot} < 2\,000$	±3
$2\,000 \leqq L_{tot} < 4\,000$	±4
$4\,000 \leqq L_{tot}$	±5

Straightness of support rails

The support rails of the actuators are precision straightened and the tolerances are better than DIN 17615.

The tolerances are arithmetic mean values and are stated for individual series and sizes, see table.

Tolerances

Length L_2 of support rail	MKUVE15..-KGT MKUVE20..-KGT			MKUSE25..-KGT		
	t_2	t_3	Torsion	t_2	t_3	Torsion
mm	mm	mm	mm	mm	mm	mm
$L_2 \leqq 1\,000$	0,4	0,3	0,8	0,4	0,3	0,5
$1\,000 < L_2 \leqq 2\,000$	0,8	0,5	1	0,8	0,5	1
$2\,000 < L_2 \leqq 3\,000$	1,2	0,7	1,2	1,2	0,7	1,5
$3\,000 < L_2 \leqq 4\,000$	1,5	1	1,6	1,5	1	2
$4\,000 < L_2 \leqq 5\,000$	1,9	1,2	1,8	1,9	1,2	2,5
$5\,000 < L_2 \leqq 5\,850$	2,5	1,5	2	2,5	1,5	3

Figure 49 shows the method for determining the straightness of the support rail.

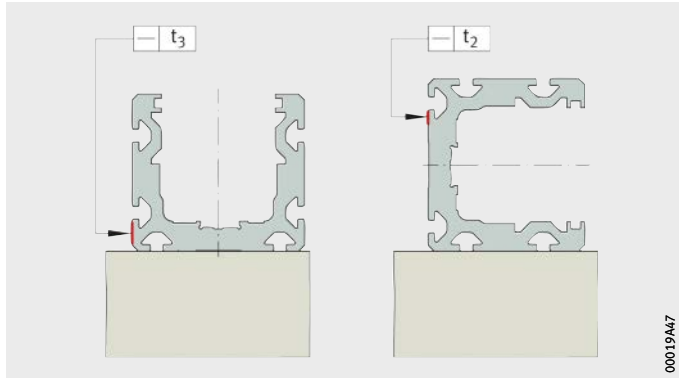

t_2, t_3 = straightness tolerance

Figure 49
Measurement method for straightness tolerances

Pitch accuracy of spindle

The pitch accuracies of rolled ball screw spindles for the individual series and sizes are given in the table.

Standard actuators are fitted single nuts with clearance where the axial clearance is dependent on the pitch. Where higher accuracy requirements are present, it is possible in the case of many spindle pitch to obtain actuators with a preloaded (clearance-free) double nut.

In the case of standard actuators, the nut unit (double nut) can only be preloaded clearance-free if the spindle pitch P is less than the nominal diameter d_0 of the spindle.

Designs of spindle and spindle nut

Designation	Spindle			Spindle nut (F, M = single nut, FM, MM = double nut)	
	∅ d_0 mm	P mm	Pitch accuracy µm/300 mm	Suffix	Axial clearance max. mm
MKUVE15-160-KGT	16	5	50	F	0,05
				FM	Preloaded
		10		F	0,05
				FM	Preloaded
		50	100	F	0,05
MKUVE20-200-KGT	20	5	50	F	0,05
				FM	Preloaded
		10		F	0,05
				FM	Preloaded
		20		F	0,05
		50			
MKUSE25-200-KGT	32	5	50	M	0,05
				MM	Preloaded
		10		M	0,05
				MM	Preloaded
		20		M	0,05
				MM	Preloaded
		40		M	0,05

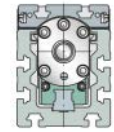

Ordering example, ordering designation

Available designs

Available designs of linear actuators MKUVE and MKUSE, see table.

Design	Linear actuator with four-row or six-row linear recirculating ball bearing and guideway assembly		
Size	Size code		
Carriage plate length	Length	L	mm
Type of drive	Ball screw drive	KGT	
	Without ball screw drive	KGT-OA	
Spindle dimensions	Spindle pitch	P	mm
Design of nut	Single nut	F/M	
	Double nut, preloaded	FM/ MM	
Spindle support	None		
	One	SPU	
	Two	2SPU	
Additional carriage unit	Second, non-driven carriage unit	WN2	
	Spacing L_{xn} between carriage units		mm
Location of carriage unit	Threaded holes		
	T-slots	N	
Lengths	Total length	L_{tot}	mm
	Total stroke length	G_H	mm

● Standard scope of delivery.

■ Design not available.

Designation and suffixes										
MKUVE							MKUSE			
15			20				25			
160			200				200			
KGT										
KGT-OA										
5	10	50	5	10	20	50	5	10	20	40
F	F	F	F	F	F	F	M	M	M	M
FM	FM	■	FM	FM	■	■	MM	MM	MM	■
●			●				●			
SPU			SPU				SPU			
2SPU			2SPU				2SPU			
WN2			WN2				WN2			
State value for L_{x1} (L_{xn} ≧ 20 mm)										
■			■				●			
N			N				■			
to be calculated from total stroke length, see page 364										
to be calculated from effective stroke length, see page 364										

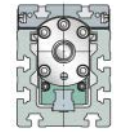

Monorail guidance system, ball screw drive

Linear actuator with four-row linear recirculating ball bearing and guideway assembly	MKUVE
Size code	20
Carriage plate length L	200 mm
Drive by ball screw drive	KGT
Spindle pitch P	5 mm
Preloaded double nut	FM
Second, non-driven carriage unit	WN2
Spacing between carriage units L_{x1}	300 mm
Carriage unit with T-slots	N
Total length L_{tot}	2 302 mm
Total stroke length G_H	1 300 mm

Ordering designation

MKUVE20-200-KGT/5-FM-WN2-N/2302-1300 (L_{x1} = 300 mm), *Figure 50*

Note total length L of carriage units. Spacing L_{x1} between carriage units must be stated.

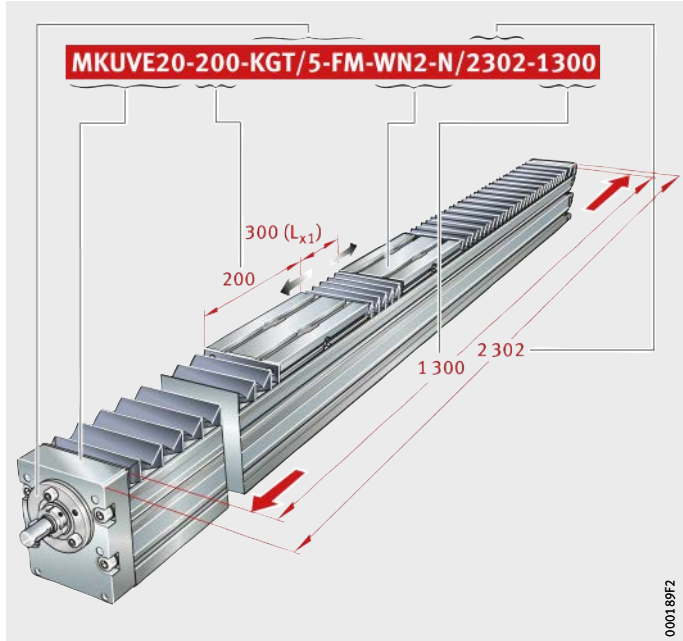

Figure 50
Ordering designation

Monorail guidance system, without ball screw drive

Linear actuator with four-row linear recirculating ball bearing and guideway assembly	MKUVE
Size code	20
Carriage plate length L	200 mm
Without ball screw drive	OA
Second, non-driven carriage unit	WN2
Spacing between carriage units L_{x1}	300 mm
Carriage unit with T-slots	N
Total length L_{tot}	2 302 mm
Total stroke length G_H	1 300 mm

Ordering designation

MKUVE20-200-KGT-OA-WN2-N/2302-1300 (L_{x1} = 300 mm), *Figure 51*

Note total length L of carriage units. Spacing L_{x1} between carriage units must be stated.

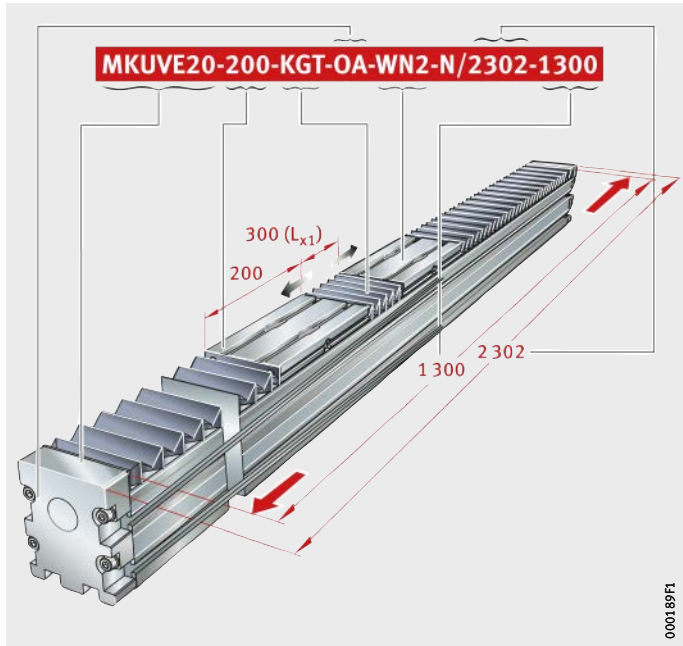

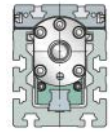

Figure 51
Ordering designation

Monorail guidance system, ball screw drive

Linear actuator with four-row linear recirculating ball bearing and guideway assembly	MKUVE
Size code	15
Carriage plate length L	160 mm
Drive by ball screw drive	KGT
Spindle pitch P	10 mm
Single nut	F
Carriage unit with T-slots	N
Total length L_{tot}	2 035 mm
Total stroke length G_H	1 500 mm

Ordering designation **MKUVE15-160-KGT/10-F-N/2035-1500**, *Figure 52*

Note total length L of carriage unit.

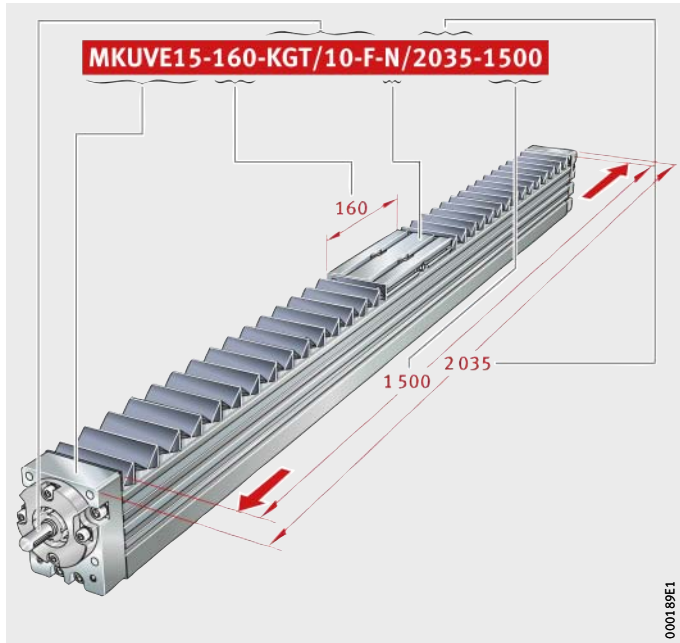

Figure 52
Ordering designation

Monorail guidance system, ball screw drive and spindle support

Linear actuator with six-row linear recirculating ball bearing and guideway assembly	MKUSE
Size code	25
Carriage plate length L	200 mm
Drive by ball screw drive	KGT
Spindle pitch P	10 mm
Preloaded double nut	MM
Carriage unit with threaded holes	–
Spindle support	SPU
Total length L_{tot}	3 979 mm
Total stroke length G_H	3 000 mm

Ordering designation **MKUSE25-200-KGT/10-MM-SPU/3979-3000**, *Figure 53*

Note total length L of carriage unit.

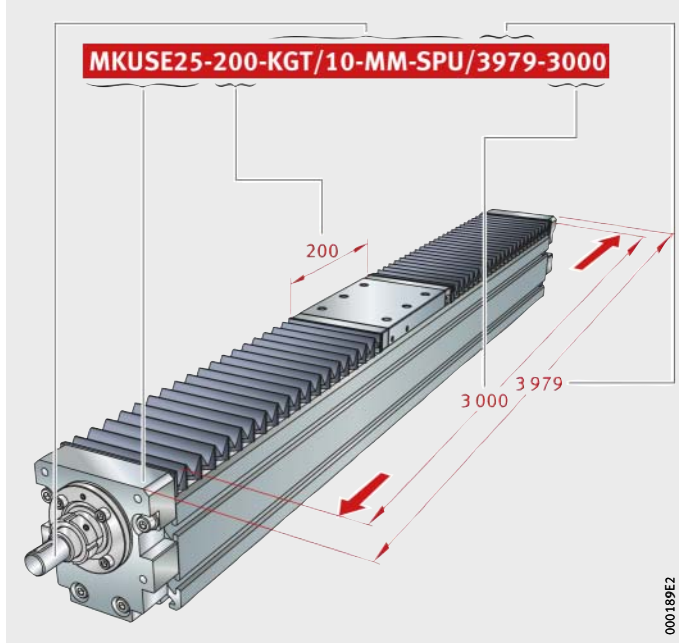

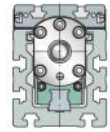

Figure 53
Ordering designation

Actuators

Four-row linear recirculating ball bearing and guideway assembly
With or without ball screw drive
Basic design

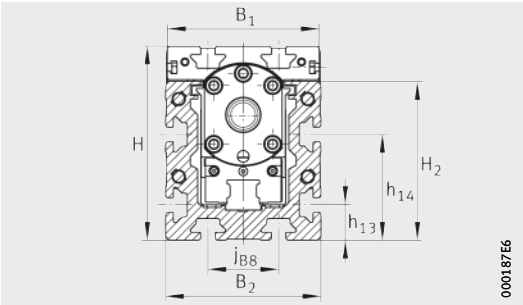

MKUVE..-KGT/..-N

Dimension table · Dimensions in mm

Designation	Dimensions			Mounting dimensions									
	B_2	H	L	b_{87}	B_1	B_5	d_{85} h6	d_{86} h7	G_{87}	h_{13}	h_{14}	h_{85}	h_{87}
MKUVE15-160-KGT/5-N	65	85	160	51	63	64	10	60	M6	22	44	52,5	51
MKUVE15-160-KGT/10-N													
MKUVE15-160-KGT/50-N													
MKUVE15-160-KGT-OA-N	65	85	160	–	63	64	–	–	–	22	44	–	–
MKUVE20-200-KGT/5-N	88	110	200	68	86	87	13	60	M6	20	60	71	46
MKUVE20-200-KGT/10-N													
MKUVE20-200-KGT/20-N													
MKUVE20-200-KGT/50-N													
MKUVE20-200-KGT-OA-N	88	110	200	–	86	87	–	–	–	20	60	–	–

Calculation of lengths L_2 and L_{tot}, see page 364.

Calculation of effective length B_L of bellows, see page 366.

1) Utilisation of the T-slots is restricted by the filling slot for insertion of T-nuts.

2) ① 2 lubrication nipples DIN 3405-A M6, see page 370.
② Filling openings in end plate, see page 373.
③ Switching tag connectors on carriage unit, see page 374.

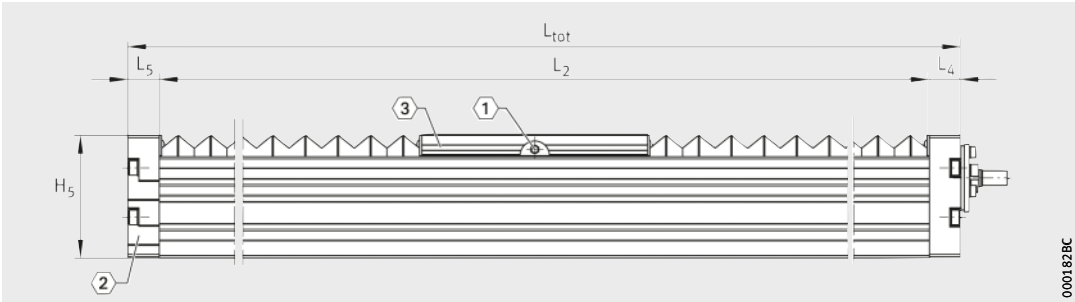

MKUVE..-KGT/..-N
1, 2, 3 [2)]

H_2	H_5	j_{B8}	J_{B43}	L_4	L_5	L_{85}	L_{86}	L_{88}	N_{B43} [1)]	N_{L43} [1)]	N_{B85}	N_{L85}	N_{T85}	t_{87} max.
68	84	40	30	25	25	23	12,2	38	10	15	3^{P9}	18	1,8	13
68	84	40	30	25	25	–	–	–	10	15	–	–	–	–
90	109	40	40	28	28	23	8	42	14	20	5^{P9}	18	3,5	15
90	109	40	40	28	28	–	–	–	14	20	–	–	–	–

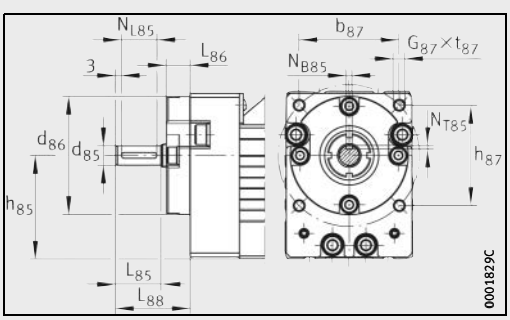

MKUVE..-KGT/..-N · Drive flange, drive shaft

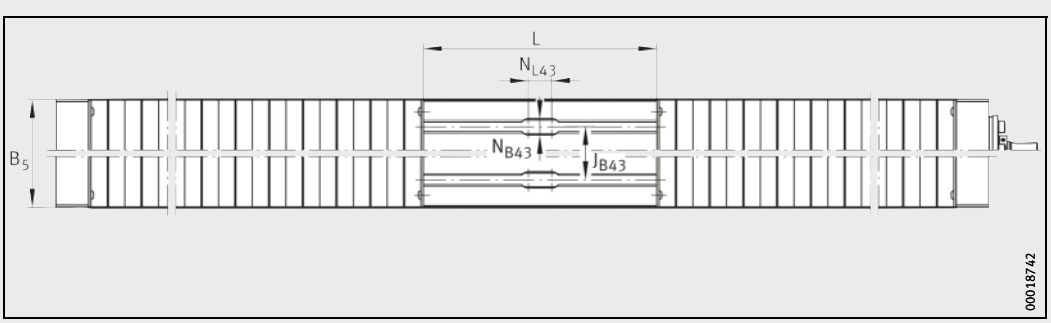

MKUVE..-KGT/..-N, MKUVE..-KGT-OA..-N · Top view

Actuators

Four-row linear recirculating ball bearing and guideway assembly
With or without ball screw drive
Second, non-driven carriage unit

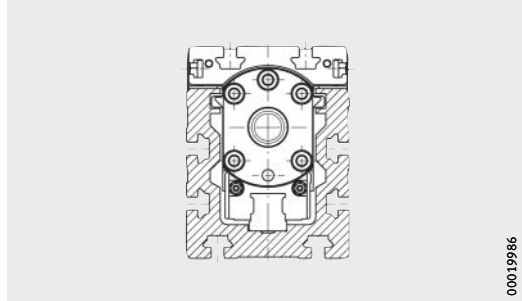

MKUVE..-KGT/..-WN2-N

Dimension table · Dimensions in mm

Designation Second, non-driven carriage	Dimensions $L_{x1\ min}$
MKUVE15-160-KGT/5-WN2-N	20
MKUVE15-160-KGT/10-WN2-N	
MKUVE15-160-KGT/50-WN2-N	
MKUVE15-160-KGT-OA-WN2-N	20
MKUVE20-200-KGT/5-WN2-N	20
MKUVE20-200-KGT/10-WN2-N	
MKUVE20-200-KGT/20-WN2-N	
MKUVE20-200-KGT/50-WN2-N	
MKUVE20-200-KGT-OA-WN2-N	20

Other geometrical features, see page 390 and page 391.

1) L_{x1} = spacing between carriage units, $L_{x1\ min}$ = minimum spacing between two carriage units.

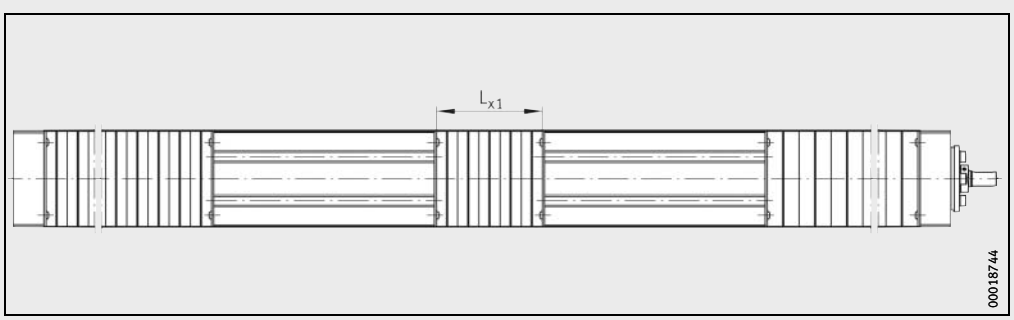

MKUVE..-KGT/..-WN2-N · Top view, spacing between carriage units, L_{x1} [1)]

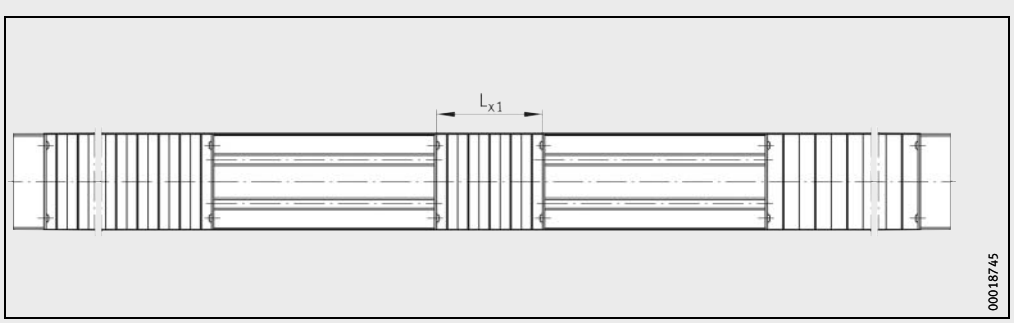

MKUVE..-KGT-OA-WN2-N · Top view, spacing between carriage units, L_{x1} [1)]

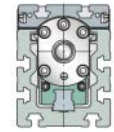

Actuators

Four-row linear recirculating ball bearing and guideway assembly
With or without ball screw drive
Performance data

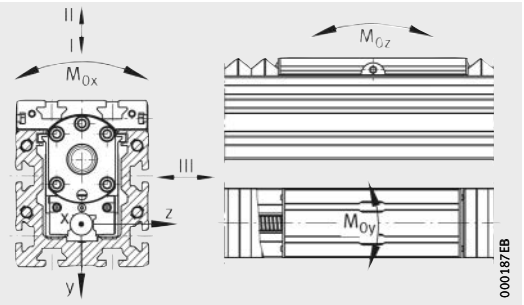

Load directions

Performance data

Designation	Carriage unit guidance system for each carriage unit									Moment of inertia of area of carrier profile	
	Basic load ratings per carriage unit						Permissible static moment ratings per carriage unit[1]				
	Load direction I Compressive load		Load direction II Tensile load		Load direction III Lateral load						
	dyn. C N	stat. C_0 N	dyn. C N	stat. C_0 N	dyn. C N	stat. C_0 N	$M_{0x\ per}$ Nm	$M_{0y\ per}$ Nm	$M_{0z\ per}$ Nm	I_y cm^4	I_z cm^4
MKUVE15-160-KGT/5 (-WN2)-N	11 700	29 000	11 700	29 000	11 700	29 000	300	700	700	96	77
MKUVE15-160-KGT/10 (-WN2)-N											
MKUVE15-160-KGT/50 (-WN2)-N											
MKUVE15-160-KGT-OA (-WN2)-N	11 700	29 000	11 700	29 000	11 700	29 000	300	700	700	96	77
MKUVE20-200-KGT/5 (-WN2)-N	21 300	54 000	21 300	54 000	21 300	54 000	664	1 000	1 200	281	219
MKUVE20-200-KGT/10 (-WN2)-N											
MKUVE20-200-KGT/20 (-WN2)-N											
MKUVE20-200-KGT/50 (-WN2)-N											
MKUVE20-200-KGT-OA (-WN2)-N	21 300	54 000	21 300	54 000	21 300	54 000	664	1 000	1 200	281	219

1) The values are single loads and apply when the underside of the actuator is fully supported.
If there are several carriage units per actuator or combined loads are present, these must be reduced.

2) F = single nut
FM = preloaded double nut (flanged and cylindrical nuts)

3) Basic load ratings in accordance with DIN 69051. Due to the modified calculation algorithms in DIN 69051, the basic load ratings C_a and C_0 may differ in comparison with older data.

4) Basic load ratings in axial direction: design criteria for locating bearing, see Catalogue HR 1, Rolling Bearings.

5) Maximum permissible drive torque on drive stud.

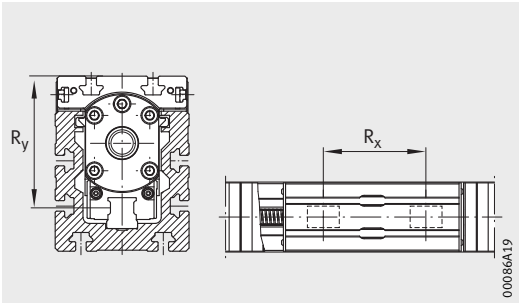

Mounting geometry of carriages

Carriage			Drive									
			Basic load ratings of spindle nut			Basic load ratings of spindle bearing arrangement (locating bearing)				Spindle		
	Spacings		Nut design[2]						Maximum drive torque[5]	d_0	P	Mass moment of inertia
	R_x mm	R_y mm		dyn. C_a[3] N	stat. C_0[3] N		dyn. C_a[4] N	stat. C_{0a}[4] N	Nm	mm	mm	kg · cm²
2×KWVE15-B-S	74,6	64,9	F, FM	9 300	13 100	ZKLN1242-2RS-PE	16 900	24 700	16	16	5	0,313
				15 400	26 500					16	10	0,321
			F	4 800	11 000					16	50	0,335
2×KWVE15-B-S	74,6	64,9	–	–	–	–	–	–	–	–	–	–
2×KWVE20-B-S	85	82,1	F, FM	10 500	16 600	ZKLF1560-2RS-PE	17 900	28 000	32	20	5	0,846
				12 700	22 100					20	10	0,846
			F	11 600	18 400					20	20	0,883
				13 000	24 600					20	50	0,845
2×KWVE20-B-S	85	82,1	–	–	–	–	–	–	–	–	–	–

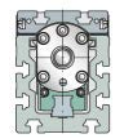

Actuators

Six-row linear recirculating ball bearing and guideway assembly
With or without ball screw drive
Basic design

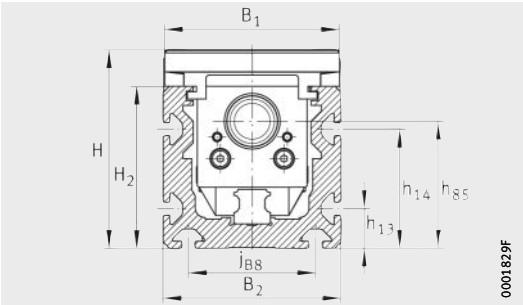

MKUSE25-200-KGT

Dimension table · Dimensions in mm

Designation	Dimensions			Mounting dimensions										
	B_2	H	L	b_{87}	B_1	B_5	d_{85} h6	d_{86} h7	G_{43}	G_{87}	h_{13}	h_{14}	h_{85}	h_{87}
MKUSE25-200-KGT/5	112	125	200	90	110	111	19	75	M10	M8	25	75	80	70
MKUSE25-200-KGT/10														
MKUSE25-200-KGT/20														
MKUSE25-200-KGT/40														
MKUSE25-200-KGT-OA	112	125	200	–	110	111	–	–	M10	–	25	75	–	–

Calculation of lengths L_2 and L_{tot}, see page 364.

Calculation of effective length B_L of bellows, see page 366.

1) ① 2 lubrication nipples DIN 3405-A M6, see page 370.
② Filling openings in end plates, see page 373.
③ Switching tag connectors on carriage unit, see page 374.

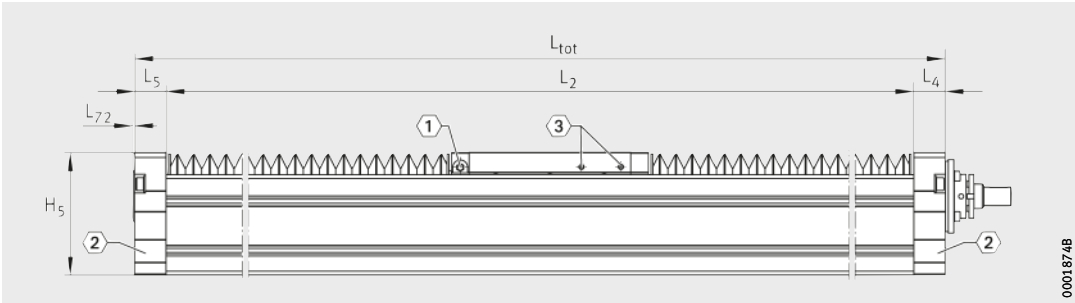

MKUSE25-200-KGT
1, 2, 3 [1)]

H_2	H_5	j_{B8}	J_{B43} ±0,1	J_{L43} ±0,2	L_4	L_5	L_{72}	L_{85}	L_{86}	L_{88}	N_{B85}	N_{L85}	N_{T85}	t_{43} max.	t_{87} max.
102	124,5	80	80	110	32	32	2	28	9	67	6^{p9}	20	3,5	20	18
102	124,5	80	80	110	–	32	2	–	–	–	–	–	–	20	–

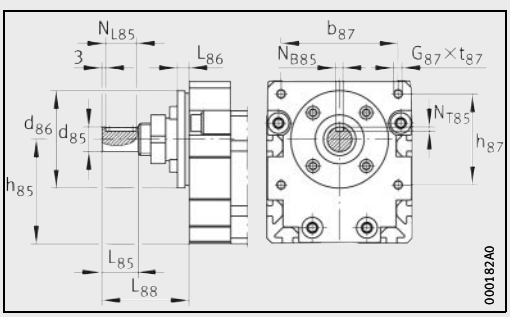

MKUSE25-200-KGT · Drive flange, drive shaft

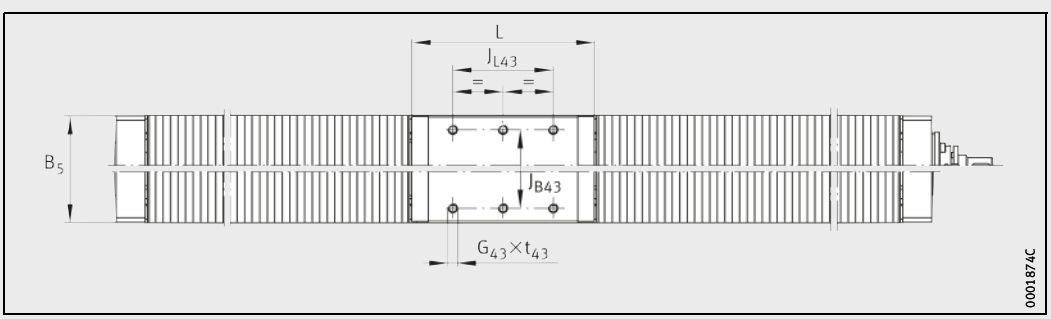

MKUSE25-200-KGT, MKUSE25-200-KGT-OA · Top view

Actuators

Six-row linear recirculating ball bearing and guideway assembly
With or without ball screw drive
Second, non-driven carriage unit

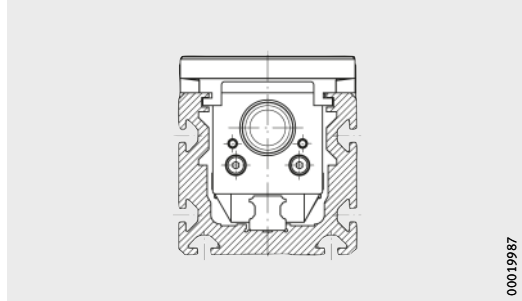

MKUSE25-200-KGT..-WN2

Dimension table · Dimensions in mm

Designation Second, non-driven carriage	Dimensions $L_{x1\ min}$
MKUSE25-200-KGT/5-WN2	20
MKUSE25-200-KGT/10-WN2	
MKUSE25-200-KGT/20-WN2	
MKUSE25-200-KGT/40-WN2	
MKUSE25-200-KGT-OA-WN2	20

Other geometrical features, see page 390 and page 391.

1) L_{x1} = spacing between carriage units, $L_{x1\ min}$ = minimum spacing between two carriage units.

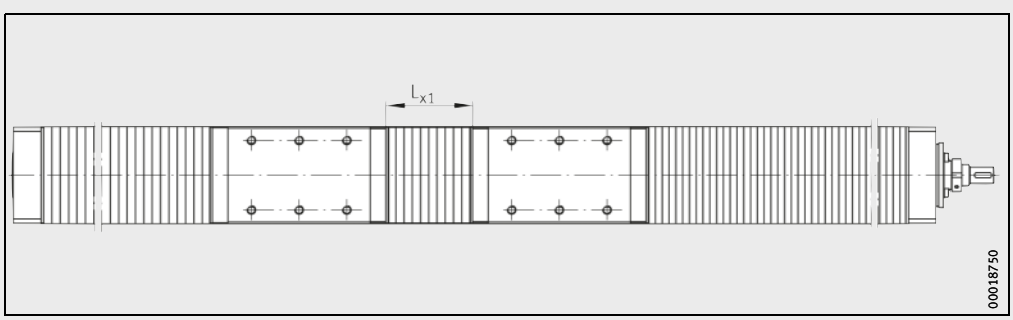

MKUSE25-200-KGT/..-WN2 · Top view, spacing between carriage units, L_{x1} [1)]

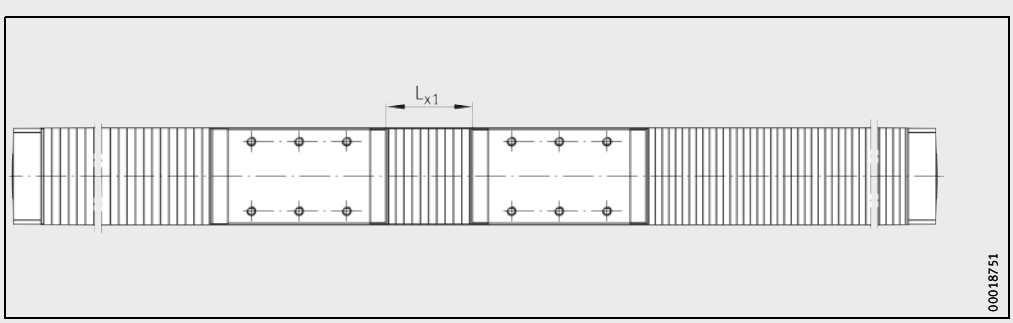

MKUSE25-200-KGT-OA-WN2 · Top view, spacing between carriage units L_{x1} [1)]

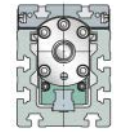

Actuators

Six-row linear recirculating ball bearing and guideway assembly
With or without ball screw drive
Performance data

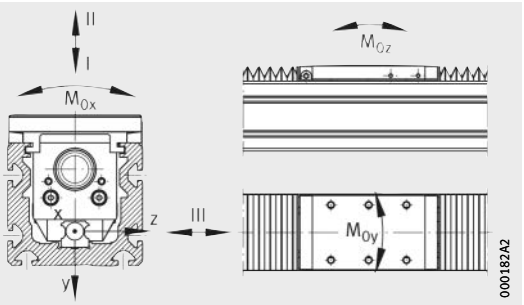

Load directions

Performance data

Designation	Carriage unit guidance system for each carriage unit									Moment of inertia of area of carrier profile	
	Basic load ratings per carriage unit						Permissible static moment ratings per carriage unit[1)]				
	Load direction I Compressive load		Load direction II Tensile load		Load direction III Lateral load						
	dyn. C N	stat. C_0 N	dyn. C N	stat. C_0 N	dyn. C N	stat. C_0 N	$M_{0x\ per}$ Nm	$M_{0y\ per}$ Nm	$M_{0z\ per}$ Nm	I_y cm^4	I_z cm^4
MKUSE25-200-KGT/5(-WN2)	45 400	134 000	37 200	86 000	34 600	92 000	1 070	2 150	2 000	670	384
MKUSE25-200-KGT/10(-WN2)											
MKUSE25-200-KGT/20(-WN2)											
MKUSE25-200-KGT/40(-WN2)											
MKUSE25-200-KGT-OA(-WN2)	45 400	134 000	37 200	86 000	34 600	92 000	1 070	2 150	2 000	670	384

1) The values are single loads and apply when the underside of the actuator is fully supported.
If there are several carriage units per actuator or combined loads are present, these must be reduced.

2) M = single nut
MM = preloaded double nut (two cylindrical nuts)

3) Basic load ratings in accordance with DIN 69051. Due to the modified calculation algorithms in DIN 69051, the basic load ratings C_a and C_0 may differ in comparison with older data.

4) Basic load ratings in axial direction: design criteria for locating bearing, see Catalogue HR 1, Rolling Bearings.

5) Maximum permissible drive torque on drive stud.

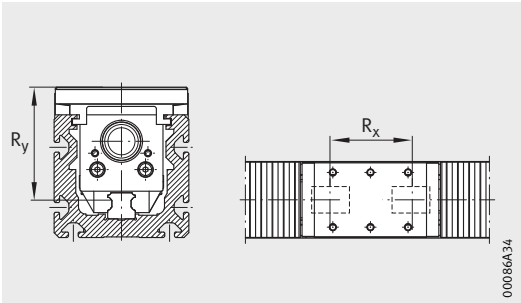

Mounting geometry of carriages

Carriage			Drive									
			Basic load ratings of spindle nut			Basic load ratings of spindle bearing arrangement (locating bearing)				Spindle		
	Spacings		Nut design[2]						Maximum drive torque[5]	d_0	P	Mass moment of inertia
	R_x mm	R_y mm		dyn. C_a[3] N	stat. C_0[3] N		dyn. C_a[4] N	stat. C_{0a}[4] N	Nm	mm	mm	kg · cm²
2×KWSE25	83,3	93,8	M/MM	21 500	49 300	ZKLF2575-2RS-PE	27 500	55 000	50	32	5	6,43
				33 400	54 500					32	10	
				29 700	59 800					32	20	
			M	14 900	32 400					32	40	
2×KWSE25	83,3	93,8	–	–	–	–	–	–	–	–	–	–

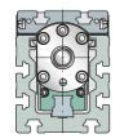

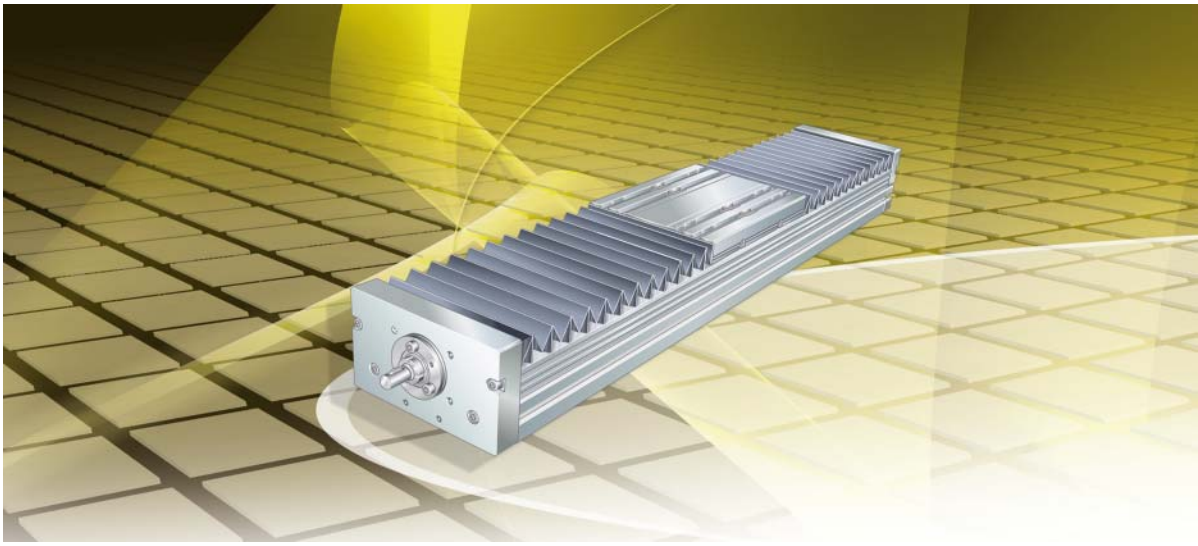

Tandem actuators with ball screw drive

Tandem actuators with ball screw drive

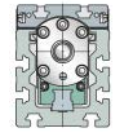

Basic design

Two parallel linear recirculating ball bearing and guideway assemblies

Ball screw drive

MDKUVE15..-KGT

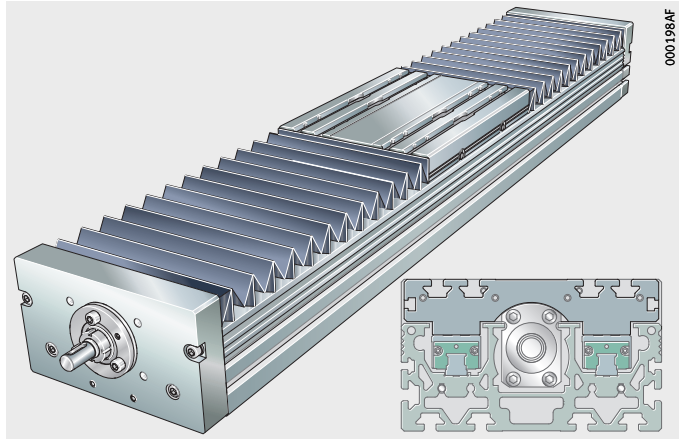

MDKUSE25..-KGT, MDKUVE25..-KGT, MDKUVE35..-KGT

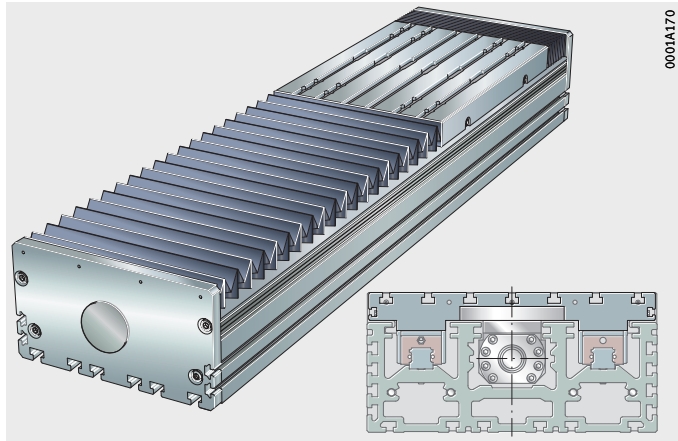

Tandem actuators with ball screw drive

Features

Tandem actuators MDKUVE..-KGT and MDKUSE..-KGT comprise:

- a carriage unit
- two linear recirculating ball bearing and guideway assemblies
- a support rail
- a ball screw drive available with various pitch values
- one locating bearing and non-locating bearing unit
- two sets of bellows.

Actuators MDKUVE..-KGT and MDKUSE..-KGT correspond substantially in their basic design and technical characteristics to the actuators MKUVE..-KGT and MKUSE..-KGT. The features of tandem actuators substantially match the features of linear actuators, see page 347.

Tandem actuators are suitable for high loads and high moments about all three axes.

The carriage unit of the tandem actuator is guided on two parallel guideways each with two carriages arranged in series.

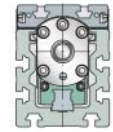

Designs

Tandem actuators MDKUVE..-KGT and MDKUSE..-KGT are available in various designs, see table.

Available designs

Suffix	Description	Design
–	One driven carriage unit	Basic design
SPU	One spindle support	Standard
2SPU	Two spindle supports	Standard
WN2	Second, non-driven carriage unit	Standard
N	Fixing slots in carriage unit	Standard
OA	Without ball screw drive	Standard

Carriage unit

The carriage unit in series MDKUVE..-KGT and MDKUSE..-KGT comprises a carriage housing made from anodised profiled aluminium, a lubrication distributor and the two KWVE or KWSE carriages of the linear recirculating ball bearing and guideway assembly, *Figure 1* and table.

If higher moment loads must be supported, the actuator is available with a second, non-driven carriage unit. It is connected to the driven carriage unit by means of the adjacent construction.

Lengths of carriage units

Series	Carriage unit length mm	Suffix
MDKUVE15..-KGT	240	240
MDKUVE25..-KGT	365	365
MDKUSE25..-KGT	365	365
MDKUVE35..-KGT	500	500
MKKUVE20..-KGT	200	200

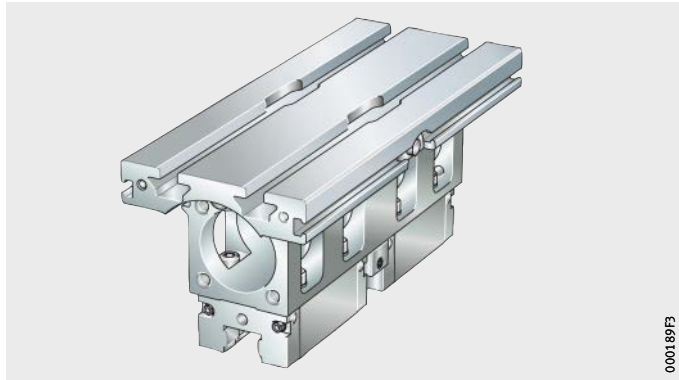

Figure 1
Carriage unit

Spindle support

Actuators MDKUVE15..-KGT with a total length of more than 1 000 mm, MDKUVE25..-KGT and MDKUSE25..-KGT with a total length of more than 1 400 mm and MDKUVE35..-KGT with a total length of more than 1 750 mm can be fitted with movable spindle supports (suffix SPU or 2SPU).

Mechanical accessories

A large number of accessories are available for tandem actuators with monorail guidance system and ball screw drive.
The allocation of accessories, see table, is valid if the data match the Technical principles, page 13, and the Design and safety guidelines, page 409.

Allocation

Linear actuator / size	MDKUVE..-KGT-N	15	25	35
	MDKUSE..-KGT-N	–	25	–
Fixing brackets, see page 811				
WKL-48×48×35		①	①	–
WKL-65×65×30-N		①	①	–
WKL-65×65×35		①	①	–
WKL-65×65×35-N		①	①	–
WKL-90×90×35-N		①	①	①
WKL-98×98×35		–	①	–
Clamping lugs, see page 829				
SPPR-22×20		①	–	–
SPPR-26×30		–	①	–
SPPR-28×30		①	①	–
SPPR-31×30		–	–	①
SPPR-34×36		–	–	①
T-nuts, see page 835				
MU-DIN 508 M4×5		①	–	–
MU-M3×5 (similar to DIN 508)		①	–	–
MU-DIN 508 M6×8		①	①	–
MU-M4×8 (similar to DIN 508)		①	①	–
MU-DIN 508 M8×10		–	①	①
MU-M6×10 (similar to DIN 508)		–	①	①
T-nuts made from corrosion-resistant steel, see page 835				
MU-DIN 508 M4×5-RB		①	–	–
MU-DIN 508 M6×8-RB		①	①	–
MU-DIN 508 M8×10-RB		–	①	①
T-bolts, see page 835				
SHR-DIN 787 M4×5×25		①	–	–
SHR DIN 787-M8×8×32		①	①	–
SHR DIN 787-M10×10×40		–	①	①
Rotatable T-nuts, see page 836				
MU-M3×5-RHOMBUS		①	–	–
MU-M4×8-RHOMBUS		①	①	–
MU-M6×8-RHOMBUS		①	①	–
MU-M8×10-RHOMBUS		–	①	①

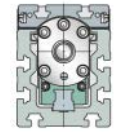

① Suitable.

Allocation
(continued)

Linear actuator / size	MKUVE..-KGT-N	15	25	35
	MKUSE..-KGT-N	–	25	–
Positionable T-nuts, see page 836				
MU-M4×5-POS		①	–	–
MU-M5×5-POS		①	–	–
MU-M4×8-POS		①	①	–
MU-M5×8-POS		①	①	–
MU-M6×8-POS		①	①	–
MU-M8×8-POS		①	①	–
Hexagon nuts, see page 837				
MU-ISO 4032 M5		①	–	–
MU-ISO 4032 M8		①	①	①
MU-ISO 4032 M10		–	①	①
T-strips, see page 837				
LEIS-M4/5-T-NUT-SB-ST		①	–	–
LEIS-M4/5-T-NUT-HR-ALU		①	–	–
LEIS-M6/8-T-NUT-SB-ST		①	①	–
LEIS-M8/8-T-NUT-SB-ST		①	①	–
LEIS-M6/8-T-NUT-HR-ST		②	②	–
LEIS-M6/8-T-NUT-HR-ALU		②	②	–
LEIS-M4/5-T-NUT-ST		①	①	–
LEIS-M6/8-T-NUT-ST		②	②	–
LEIS-M8/10-T-NUT-ST		–	②	②
Connector sets (parallel connectors), see page 838				
VBS-PVB8		①	①	–
VBS-PVB10		–	①	①
VBS-PVB8/10		①	①	①
Slot closing strips, see page 838				
NAD-5×5,7		①	–	–
NAD-8×4,5		①	①	–
NAD-8×11,5		①	①	–
NAD-10×6,5		–	①	①

① Suitable.
② Suitable and T-strips must already have been inserted at the time of despatch.

Design and safety guidelines

See section Actuators with ball screw drive, page 344. The following pages describe exclusively the differences between the tandem actuators and the linear actuators.

Deflection

The deflection of tandem actuators is essentially dependent on the support spacing, the rigidity of the support rail, the adjacent construction and the bearing arrangement. As the rigidity of these components increases, the deflection of the support rail is reduced.

Diagrams

The diagram values are determined for a bearing arrangement or clamping which is in theory infinitely rigid and are subdivided into locating/non-locating and locating/locating bearing arrangements.

The deflection of the support rail is valid under the following conditions:

- support rail unit comprising carrier profile and guideway
- support spacings up to 5 850 mm
- introduction of the load at the centre of the carriage unit if this is at the centre point between the bearing points.

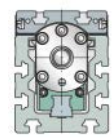

MDKUVE15..-KGT

Locating/non-locating bearing arrangement
Δ_{vy} = deflection
l = support spacing

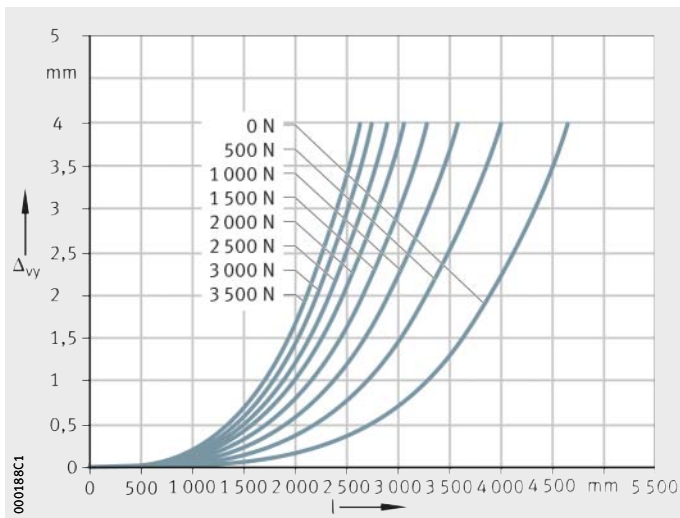

Figure 2
Deflection about the z axis

MDKUVE15..-KGT

Locating/locating bearing arrangement
Δ_{vy} = deflection
l = support spacing

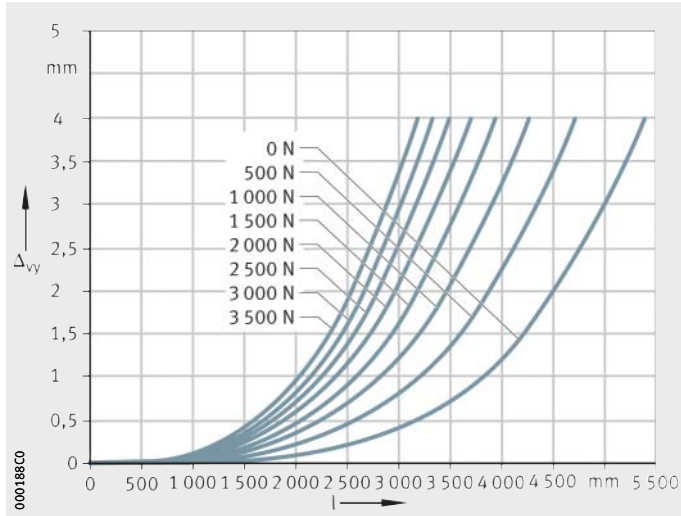

Figure 3
Deflection about the z axis

MDKUVE15..-KGT

Locating/non-locating bearing arrangement
Δ_{vz} = deflection
l = support spacing

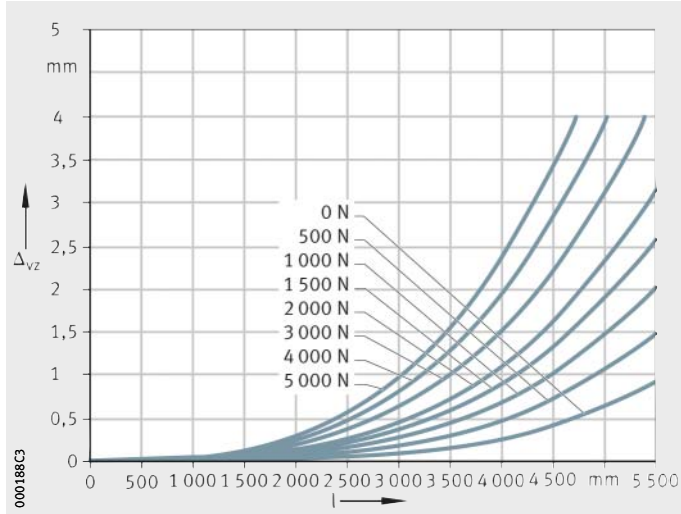

Figure 4
Deflection about the y axis

MDKUVE15..-KGT

Locating/locating bearing arrangement
Δ_{vz} = deflection
l = support spacing

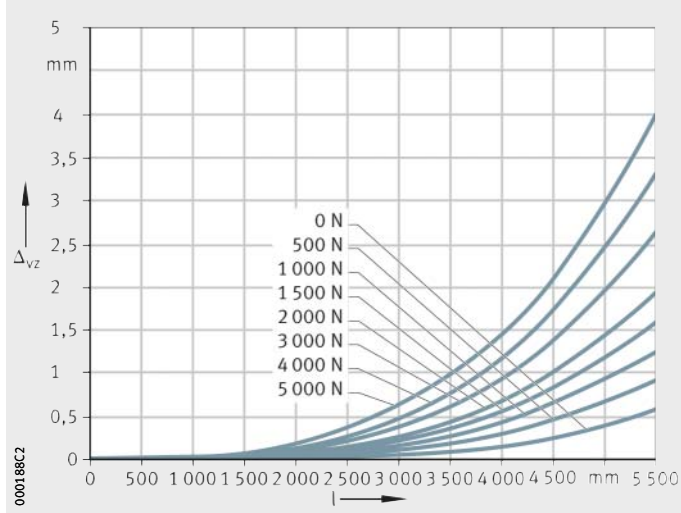

Figure 5
Deflection about the y axis

MDKUVE25..-KGT
MDKUSE25..-KGT

Locating/non-locating bearing arrangement
Δ_{vy} = deflection
l = support spacing

Figure 6
Deflection about the z axis

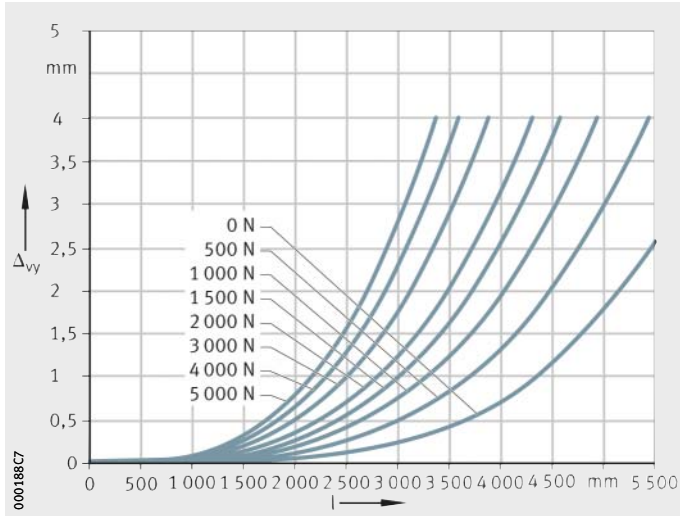

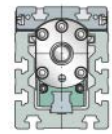

MDKUVE25..-KGT
MDKUSE25..-KGT

Locating/locating bearing arrangement
Δ_{vy} = deflection
l = support spacing

Figure 7
Deflection about the z axis

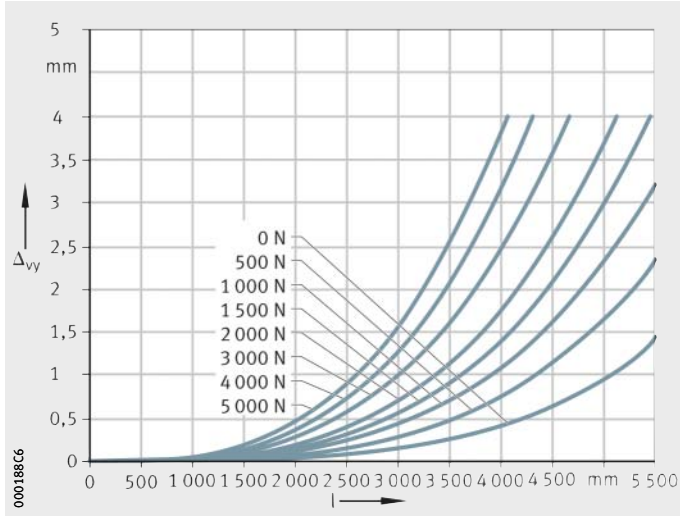

MDKUVE25..-KGT
MDKUSE25..-KGT

Locating/non-locating bearing arrangement
Δ_{vz} = deflection
l = support spacing

Figure 8
Deflection about the y axis

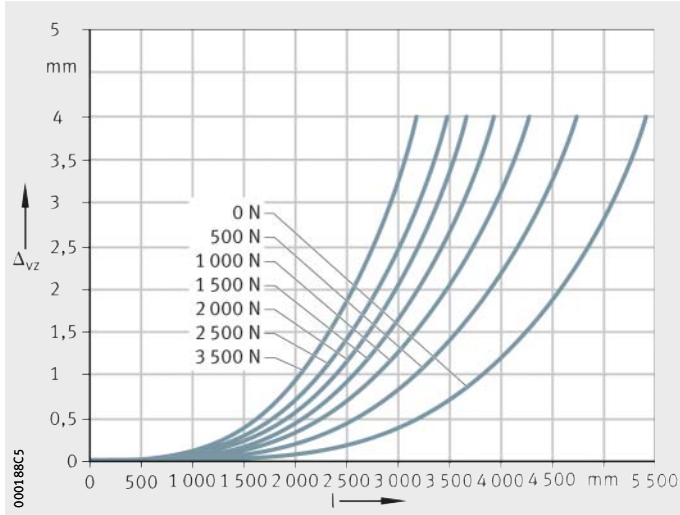

MDKUVE25..-KGT
MDKUSE25..-KGT

Locating/locating bearing arrangement
Δ_{vz} = deflection
l = support spacing

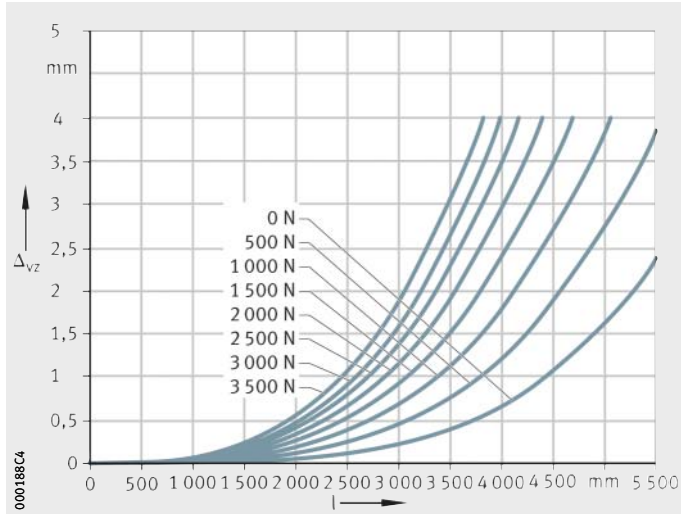

Figure 9
Deflection about the y axis

MDKUVE35..-KGT

Locating/non-locating bearing arrangement
Δ_{vy} = deflection
l = support spacing

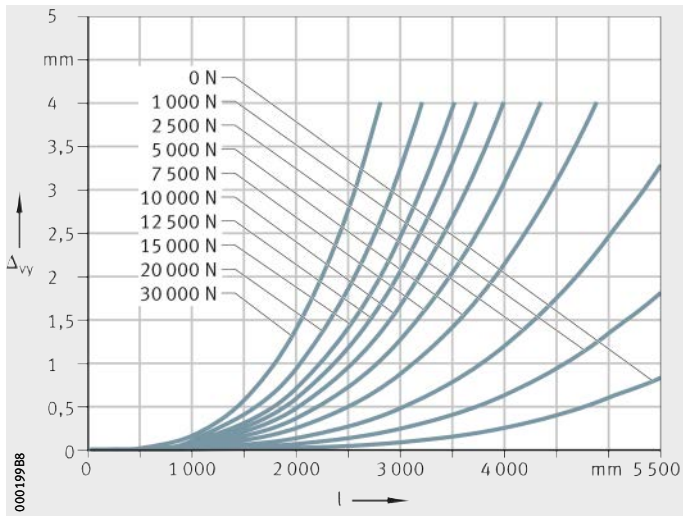

Figure 10
Deflection about the z axis

MDKUVE35..-KGT

Locating/locating bearing arrangement
Δ_{vy} = deflection
l = support spacing

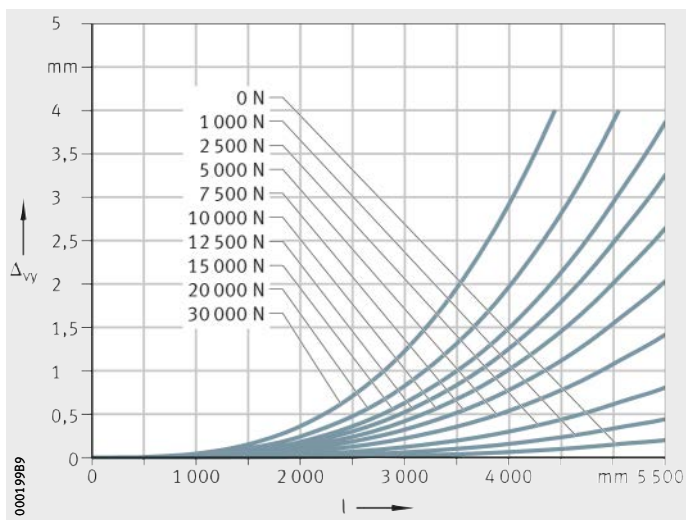

Figure 11
Deflection about the z axis

MDKUVE35..-KGT

Locating/non-locating bearing arrangement
Δ_{vz} = deflection
l = support spacing

Figure 12
Deflection about the y axis

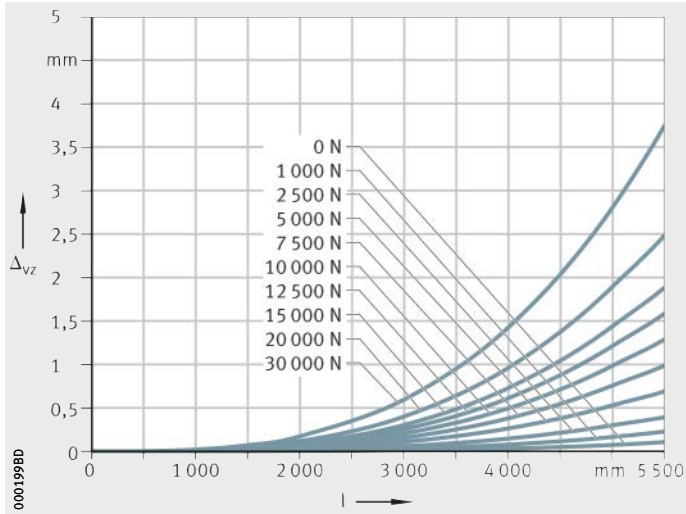

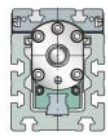

MDKUVE35..-KGT

Locating/locating bearing arrangement
Δ_{vz} = deflection
l = support spacing

Figure 13
Deflection about the y axis

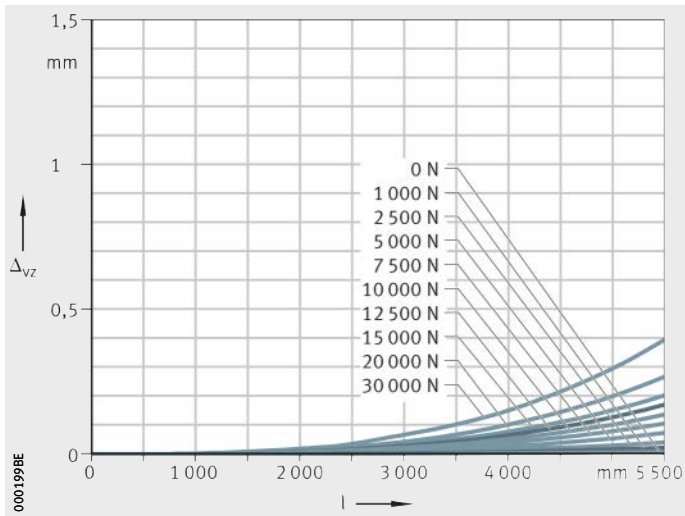

Idling drive torque

The idling drive torque M_0 of linear actuators with screw drive is calculated as a function of the spindle speed and the horizontal (M_{0h}) or vertical (M_{0v}) mounting position. The idling drive torque increases with increasing travel velocity.

MDKUVE15..-KGT/..-F
MDKUVE15..-KGT/..-FM

n = spindle speed
M_{0h} = idling drive torque

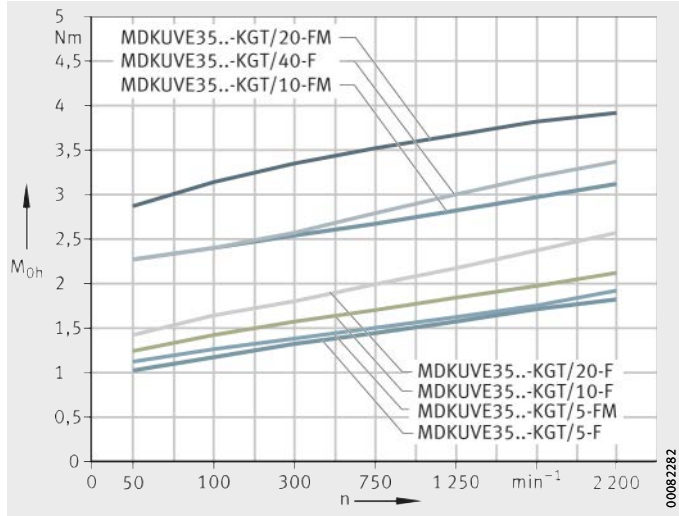

Figure 14
Idling drive torque
Horizontal mounting position

MDKUVE15..-KGT/..-F
MDKUVE15..-KGT/..-FM

n = spindle speed
M_{0v} = idling drive torque

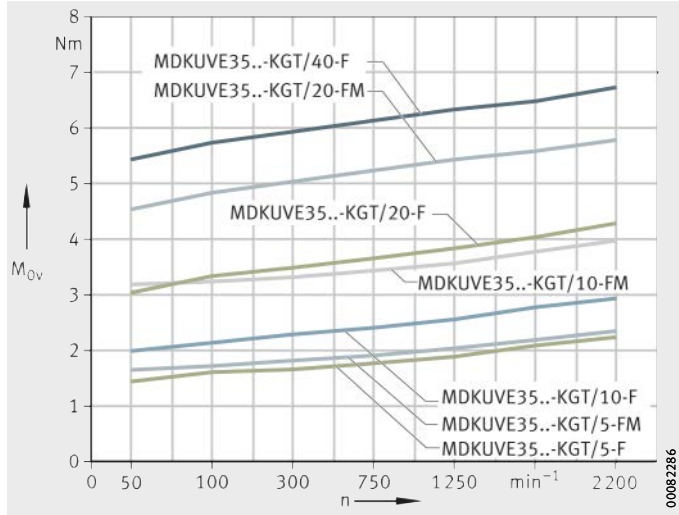

Figure 15
Idling drive torque
Vertical mounting position

MDKUVE25..-KGT/..-F
MDKUVE15..-KGT/..-FM
MDKUSE25..-KGT/..-F
MDKUSE25..-KGT/..-FM

n = spindle speed
M_{0h} = idling drive torque

Figure 16
Idling drive torque
Horizontal mounting position

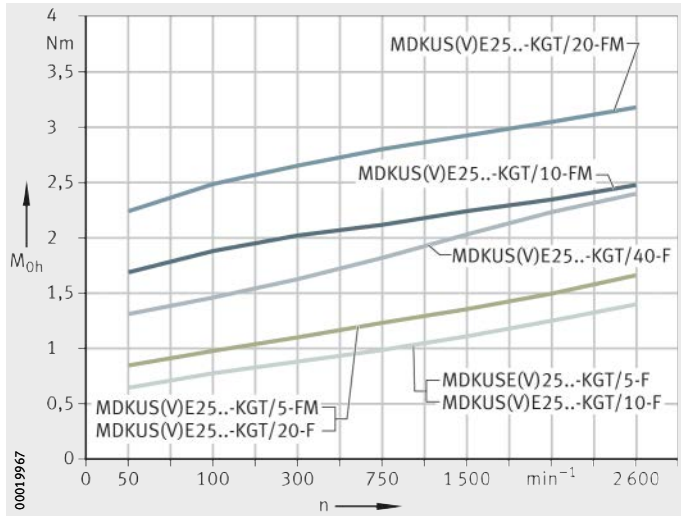

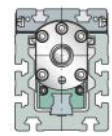

MDKUVE25..-KGT/..-F
MDKUVE15..-KGT/..-FM
MDKUSE25..-KGT/..-F
MDKUSE25..-KGT/..-FM

n = spindle speed
M_{0v} = idling drive torque

Figure 17
Idling drive torque
Vertical mounting position

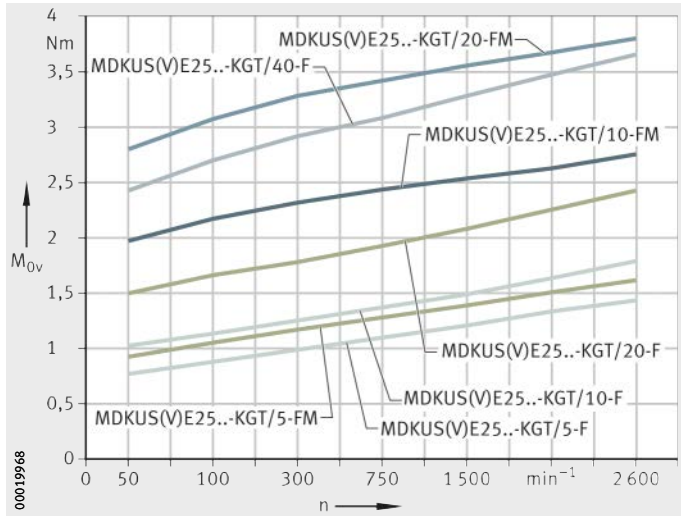

MDKUVE35..-KGT/..-F
MDKUVE35..-KGT/..-FM

n = spindle speed
M_{0h} = idling drive torque

Figure 18
Idling drive torque
Horizontal mounting position

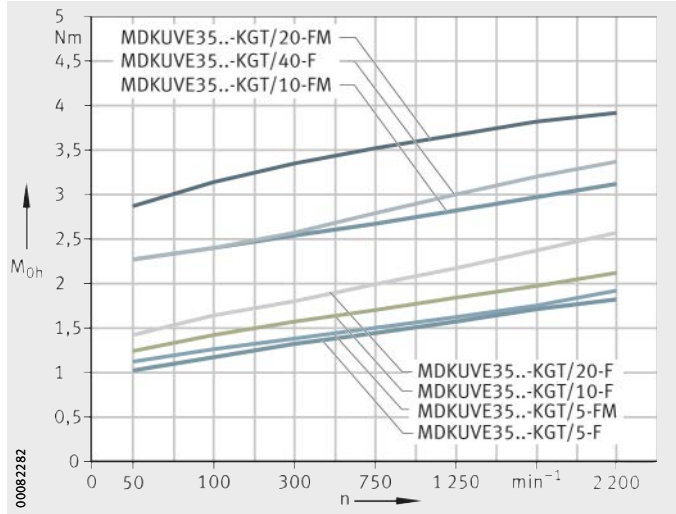

MDKUVE35..-KGT/..-F
MDKUVE35..-KGT/..-FM

n = spindle speed
M_{0v} = idling drive torque

Figure 19
Idling drive torque
Vertical mounting position

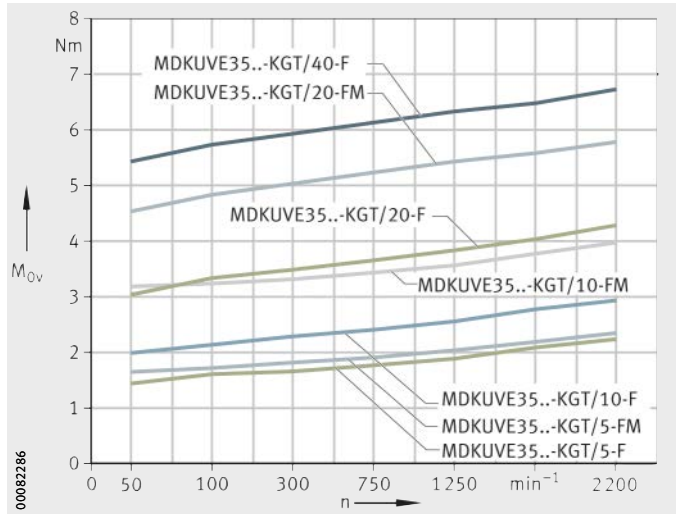

Length calculation of tandem actuators

The length calculation of tandem actuators is based on the required effective stroke length N_H. The effective stroke length N_H must be increased by the addition of safety spacing values on both sides of the travel distance.

The total length L_{tot} of actuators is determined from the support rail length L_2 and the lengths of the end plates L_4 and L_5. If two carriage units are present, both carriage unit lengths L and the spacing L_{x1} must be taken into consideration.

Parameters for length calculation

G_H mm
Total stroke length

N_H mm
Effective stroke length

S mm
Safety spacing, see table, page 419

L mm
Length of carriage plate

L_2 mm
Length of support rail

L_4 mm
Length of end plate

L_5 mm
Length of end plate

L_{tot} mm
Total length of actuator

L_{x1} mm
Spacing between two carriage units

B_L mm
Effective length of bellows

F_{BL} –
Effective length factor according to actuator type.

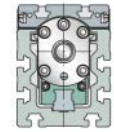

Total stroke length

The total stroke length G_H is determined from the required effective stroke length and the safety spacings, which must correspond to at least the spindle pitch P.

$$G_H = N_H + 2 \cdot S$$

Support rails

Actuators with monorail guidance system and ball screw drive are only available with a single-piece support rail. The maximum length of a support rail is 5 850 mm.

Spacing L_{x1} between carriage units

The minimum spacing $L_{x1\ min}$ between two carriage units is 20 mm.

Total length L_{tot} and support rail length L_2

The following equations are designed for one and two carriage units. The parameters and their position can be found in *Figure 20*, *Figure 21* and the table, page 419. If more than two carriage units are present, please contact us.

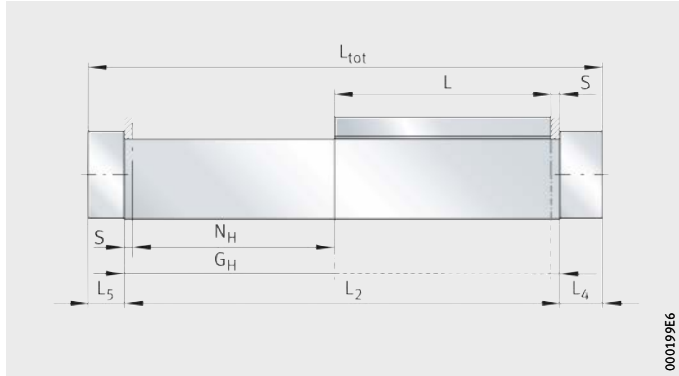

Figure 20
Length parameters for one carriage unit

One carriage unit with bellows

$$L_2 = G_H \cdot F_{BL} + L + 25$$

Total length

$$L_{tot} = L_2 + L_4 + L_5$$

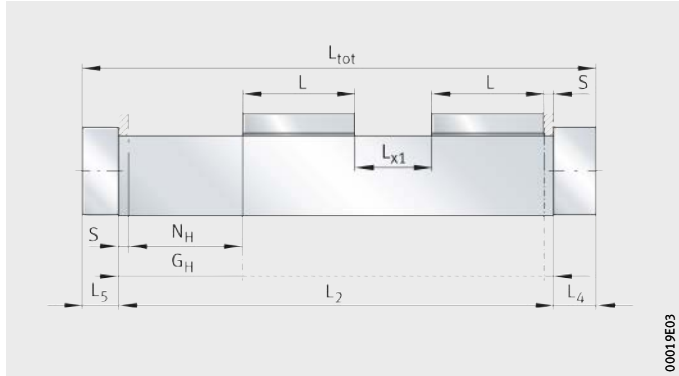

Figure 21
Length parameters for two carriage units

Two carriage units with bellows

$$L_2 = G_H \cdot F_{BL} + 2 \cdot L + L_{x1} + 25$$

Total length

$$L_{tot} = L_2 + L_4 + L_5$$

Length parameters

Designation	L mm	L_4 mm	L_5 mm	S mm	F_{BL}
MDKUVE15-240-KGT/5-N	240	28	28	5	1,15
MDKUVE15-240-KGT/10-N				10	
MDKUVE15-240-KGT/20-N				20	
MDKUVE15-240-KGT/50-N				50	
MDKUVE15-240-KGT-OA-N	240	–	28	10	
MDKUVE25-365-KGT/5-N	365	33	28	5	1,18
MDKUVE25-365-KGT/10-N				10	
MDKUVE25-365-KGT/20-N				20	
MDKUVE25-365-KGT/40-N				40	
MDKUVE25-365-KGT-OA-N	365	–	28	10	
MDKUSE25-365-KGT/5-N	365	33	28	5	1,18
MDKUSE25-365-KGT/10-N				10	
MDKUSE25-365-KGT/20-N				20	
MDKUSE25-365-KGT/40-N				40	
MDKUSE25-365-KGT-OA-N	365	–	28	10	
MDKUVE35-500-KGT/5-N	500	48	30	5	1,1
MDKUVE35-500-KGT/10-N				10	
MDKUVE35-500-KGT/20-N				20	
MDKUVE35-500-KGT/40-N				40	
MDKUVE35-500-KGT-OA-N	500	–	30	10	

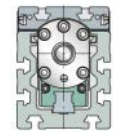

Effective length of bellows

The effective length of bellows is the length occupied by the bellows in the fully compressed state. Calculation is based on the total stroke length G_H, *Figure 22*, equations and table.

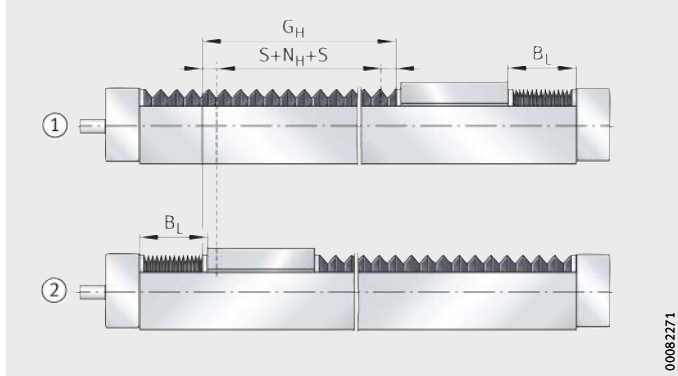

① Carriage unit against the right end stop
② Carriage unit against the left end stop

Figure 22
Effective length calculation

$$B_L = \frac{G_H \cdot (F_{BL} - 1) + 25}{2}$$

B_L mm
Effective length of bellows

G_H mm
Total stroke length

F_{BL} –
Effective length factor according to actuator type, see table.

Mass calculation

The total mass of an actuator is calculated from the mass of the actuator without a carriage unit, the carriage unit and the special design: second carriage unit (WN2), *Figure 23*. Insert the values from the table in the following equation. The values m_{LAW} and m_{BOL} are mandatory.

$$m_{tot} = m_{LAW} + m_{BOL} + m_3$$

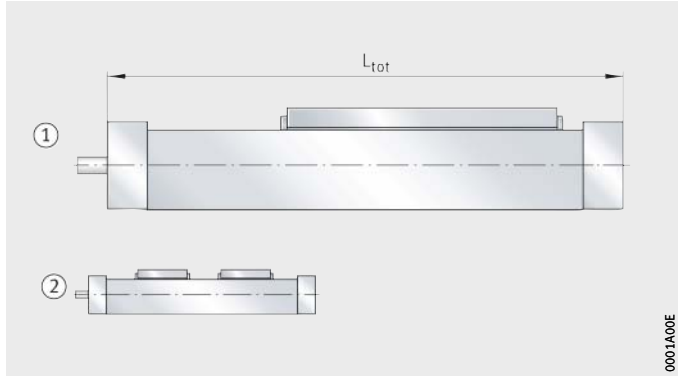

① Basic design
② Second carriage unit (WN2)

Figure 23
Basic and additional designs

Values for mass calculation

Designation	Mass		
	Carriage unit m_{LAW} ≈kg	Design WN2 m_3 ≈kg	Actuator without carriage unit m_{BOL} ≈kg
MDKUVE15-240-KGT..-N	4,61	4,2	$(L_{tot} - 56) \cdot 0{,}0177 + 3{,}51$
MDKUVE15-240-KGT-OA..-N	4,2	4,2	$(L_{tot} - 56) \cdot 0{,}0177 + 2{,}53$
MDKUVE25-365-KGT..-N	13,04	11,48	$(L_{tot} - 61) \cdot 0{,}0372 + 7{,}56$
MDKUVE25-365-KGT-OA..-N	11,48	11,48	$(L_{tot} - 56) \cdot 0{,}0372 + 5{,}36$
MDKUSE25-365-KGT..-N	12,84	11,28	$(L_{tot} - 61) \cdot 0{,}0380 + 7{,}56$
MDKUSE25-365-KGT-OA..-N	11,28	11,28	$(L_{tot} - 56) \cdot 0{,}0380 + 5{,}36$
MDKUVE35-500-KGT..-N	34,7	28,41	$(L_{tot} - 78) \cdot 0{,}0797 + 22{,}21$
MDKUVE35-500-KGT-OA..-N	30	28,41	$(L_{tot} - 60) \cdot 0{,}0797 + 13{,}21$

Lubrication

The information on the lubrication of tandem actuators matches the information on the lubrication of linear actuators, see page 368. The only differences are in the relubrication quantities and relubrication points.

Relubrication quantities

Relubrication should be carried out wherever possible with several partial quantities at various times instead of the complete quantity at the time of the relubrication interval. Relubrication quantities, see table.

Grease quantities

Tandem actuator	Relubrication quantity per driven carriage unit, lubrication nipple and longitudinal face		Relubrication quantity per non-driven carriage unit, lubrication nipple and longitudinal face	
	Drive side ≈g	Non-locating bearing side ≈g	Drive side ≈g	Non-locating bearing side ≈g
MDKUVE15-240-KGT/5-F MDKUVE15-240-KGT/5-FM MDKUVE15-240-KGT/10-F MDKUVE15-240-KGT/10-FM MDKUVE15-240-KGT/20-F MDKUVE15-240-KGT/50-F	2 to 3	1 to 2	1 to 2	1 to 2
MDKUVE25-365-KGT/5-F MDKUVE25-365-KGT/5-FM MDKUVE25-365-KGT/10-F MDKUVE25-365-KGT/10-FM MDKUVE25-365-KGT/20-F MDKUVE25-365-KGT/20-FM MDKUVE25-365-KGT/40-F	6 to 9	3 to 5	3 to 5	3 to 5
MDKUSE25-365-KGT/5-F MDKUSE25-365-KGT/5-FM MDKUSE25-365-KGT/10-F MDKUSE25-365-KGT/10-FM MDKUSE25-365-KGT/20-F MDKUSE25-365-KGT/20-FM MDKUSE25-365-KGT/40-F	8 to 12	6 to 8	6 to 8	6 to 8
MDKUVE35-500-KGT/5-F MDKUVE35-500-KGT/5-FM MDKUVE35-500-KGT/10-F MDKUVE35-500-KGT/10-FM MDKUVE35-500-KGT/20-F MDKUVE35-500-KGT/20-FM MDKUVE35-500-KGT/40-F	7 to 11	4 to 6	4 to 6	4 to 6

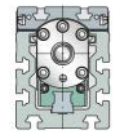

Relubrication points

Each carriage unit in a tandem actuator with linear recirculating ball bearing and guideway assembly and ball screw drive is equipped with four funnel type lubrication nipples according to DIN 3405-A M6. It can be lubricated from either the left or right side. On the drive side, lubrication nipples are located to the left and right longitudinal sides of the carriage unit through which the front carriages and spindle nut can be relubricated.
The carriages on the non-locating bearing side can be relubricated via a further countersunk lubrication nipple on each longitudinal side of the carriage unit, *Figure 24*.

MDKUVE..-KGT
MDKUSE..-KGT

① Funnel type lubrication nipple DIN 3405-A M6

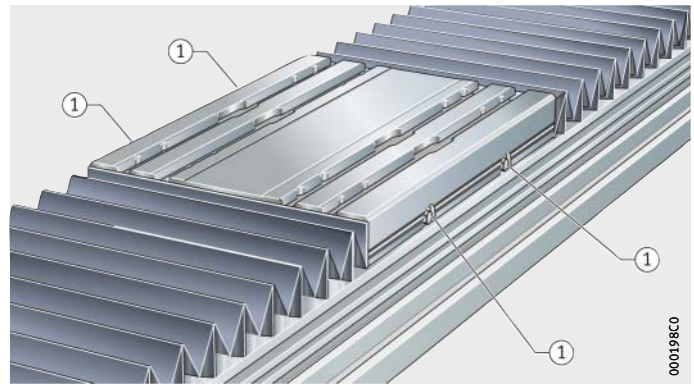

Figure 24
Lubrication points

During lubrication of actuators, all lubrication points on one longitudinal side of a carriage unit must always be provided with lubricant.

Position of relubrication points

Designation	Mounting dimensions			
	S_{56} mm	h_{56} mm	l_{56} mm	l_{57} mm
MDKUVE15..-KGT..-N	15	20	70,3	99,4
MDKUVE25..-KGT..-N	15	28	95,85	173,3
MDKUSE25..-KGT..-N	15	28	82,8	199,4
MDKUVE35..-KGT..-N	36	30	122,5	255

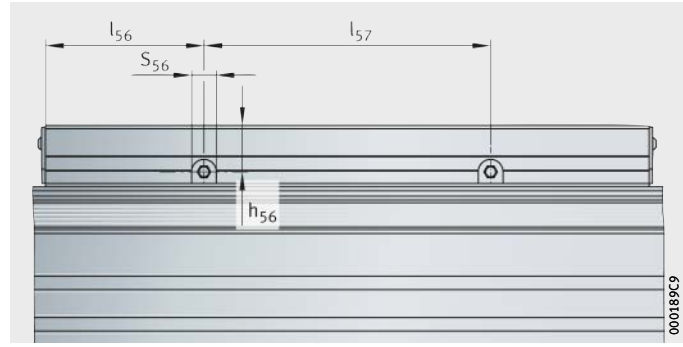

Figure 25
Position of relubrication points

T-slots

The T-slots in the support rail and the carriage unit are designed for T-bolts according to DIN 787 and T-nuts according to DIN 508, *Figure 26*.

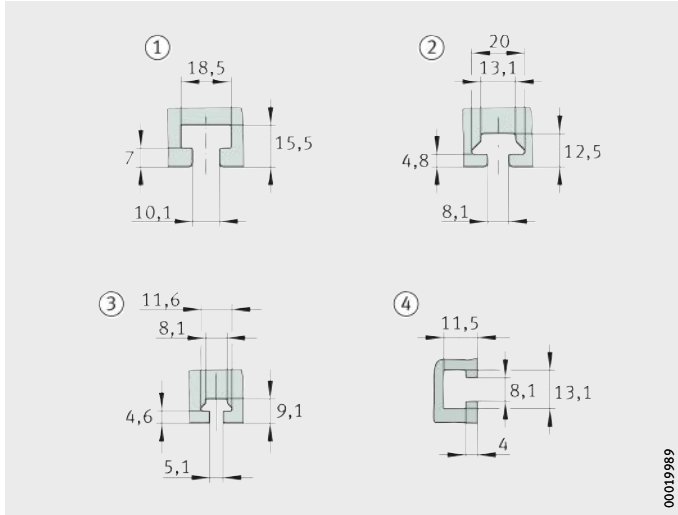

① T-slot size 10
② T-slot size 8, type B
③ T-slot size 5
④ T-slot size 8, type C

Figure 26
Sizes of T-slots
in support rail and carriage unit

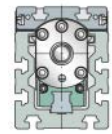

Dimensions of T-slots

Designation	Support rail		Carriage unit	
	Lateral	Bottom	Top	Lateral
MDKUVE15..-KGT	③	②	②	③
MDKUSE15..-KGT	②	–	–	–
MDKUVE25..-KGT	②	①	②	④
MDKUSE25..-KGT	②	①	②	④
MDKUVE35..-KGT	①	①	①	④

Filling openings

The filling openings in the non-locating bearing units of the tandem actuators are used for the insertion of T-nuts and T-bolts in the T-slots of the support rail. The filling openings are arranged at the centre of the carriage unit.

Connectors for switching tags

Switching tags can be screw mounted to the carriage unit in order to activate switches in the adjacent construction. The position and size are dependent on the size, *Figure 27* and table.

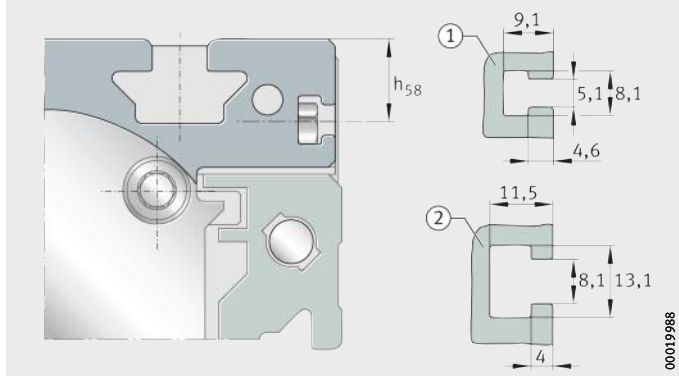

Figure 27
Connectors for switching tags on the carriage unit

Mounting dimensions for switching tags

Designation	T-slot	Mounting dimensions h_{58} mm
MDKUVE15..-KGT	①	19,3
MDKUVE25..-KGT	②	23
MDKUSE25..-KGT	②	23
MDKUVE35..-KGT	②	28

Maximum permissible spindle speed

The data on the maximum permissible spindle speed of the tandem actuators matches the data for linear actuators, see page 375.

Diagram

The diagram is valid for tandem actuators with and without spindle supports, *Figure 28*.

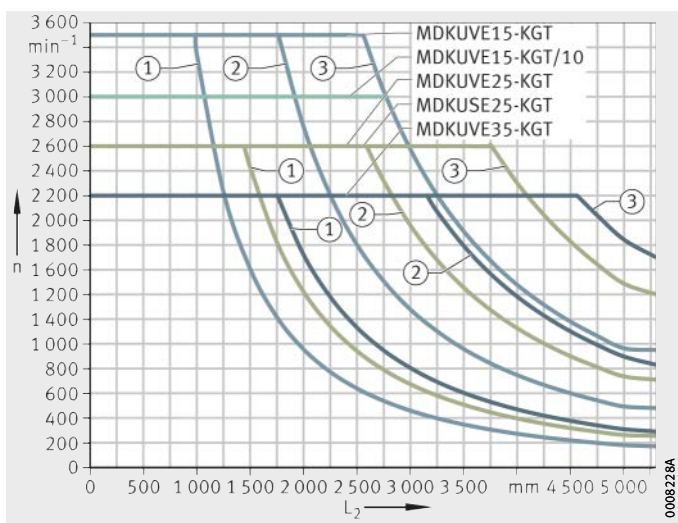

MDKUVE..-KGT
MDKUSE..-KGT

n = maximum permissible spindle speed
L_2 = support rail length
① Without spindle support
② One spindle support
③ Two spindle supports

Figure 28
Maximum permissible spindle speed

Kinematic operating limits

Actuator	Acceleration a m/s²	Maximum velocity v m/s	Maximum spindle speed n min⁻¹
MDKUVE15-240-KGT/5-F	20	0,29	3 500[1)]
MDKUVE15-240-KGT/5-FM	10		
MDKUVE15-240-KGT/10-F	20	0,5	3 000
MDKUVE15-240-KGT/10-FM	10		
MDKUVE15-240-KGT/20-F	20	1,16	3 500[1)]
MDKUVE15-240-KGT/50-F	20	2,9	3 500[1)]
MDKUVE25-365-KGT/5-F	20	0,215	2 600[1)]
MDKUVE25-365-KGT/5-FM	10		
MDKUVE25-365-KGT/10-F	20	0,43	
MDKUVE25-365-KGT/10-FM	10		
MDKUVE25-365-KGT/20-F	20	0,86	
MDKUVE25-365-KGT/20-FM	10		
MDKUVE25-365-KGT/40-F	20	1,73	
MDKUSE25-365-KGT/5-F	20	0,215	2 600[1)]
MDKUSE25-365-KGT/5-FM	10		
MDKUSE25-365-KGT/10-F	20	0,43	
MDKUSE25-365-KGT/10-FM	10		
MDKUSE25-365-KGT/20-F	20	0,86	
MDKUSE25-365-KGT/20-FM	10		
MDKUSE25-365-KGT/40-F	20	1,73	
MDKUVE35-500-KGT/5-F	20	0,18	2 200[1)]
MDKUVE35-500-KGT/5-FM	10		
MDKUVE35-500-KGT/10-F	20	0,36	
MDKUVE35-500-KGT/10-FM	10		
MDKUVE35-500-KGT/20-F	20	0,73	
MDKUVE35-500-KGT/20-FM	10		
MDKUVE35-500-KGT/40-F	20	1,46	

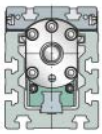

[1)] Restricted by the limiting speed of the locating bearing with grease lubrication.

Accuracy

Length tolerances

The information on the length tolerance of tandem actuators matches the information on the length tolerance of linear actuators, see page 380.

Straightness of support rails

The information on the straightness of the support rails of tandem actuators matches the information on the straightness of the support rails of linear actuators, see page 381.
Values for the straightness tolerances of support rails of tandem actuators, see table.

Tolerances

Length L_2 of support rail mm	MDKUVE15..-KGT			MDKUSE25..-KGT MDKUVE25..-KGT			MDKUVE35..-KGT		
	t_2 mm	t_3 mm	Torsion mm	t_2 mm	t_3 mm	Torsion mm	t_2 mm	t_3 mm	Torsion mm
$L_2 \leqq 1\,000$	0,6	0,5	0,5	0,8	0,7	0,5	0,8	0,7	0,8
$1\,000 < L_2 \leqq 2\,000$	1	0,7	1	1,2	0,9	1	1,6	1,4	1,2
$2\,000 < L_2 \leqq 3\,000$	1,4	0,9	1,5	1,6	1,1	1,5	2,4	2,1	2
$3\,000 < L_2 \leqq 4\,000$	1,7	1,2	2	1,9	1,4	2	3,2	2,8	2,4
$4\,000 < L_2 \leqq 5\,000$	2,1	1,4	2,5	2,3	1,6	2,5	4	3,5	2,8
$5\,000 < L_2 \leqq 5\,850$	2,7	1,7	3	2,9	1,9	3	4,8	4,2	3,3

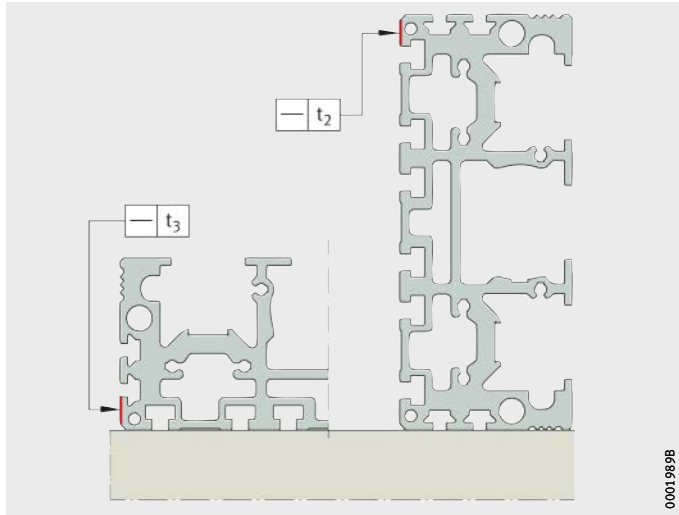

t_2, t_3 = straightness tolerance

Figure 29
Measurement method for straightness tolerances

Pitch accuracy of spindle

The information on the pitch accuracy of the spindle in tandem actuators matches the information on the pitch accuracy of the spindle in linear actuators, see page 382. Values for the ball screw drive in tandem actuators, see table.

Designs of spindle and spindle nut

Designation	Spindle			Spindle nut (F = single nut, FM = double nut)	
	∅ d_0 mm	P mm	Pitch accuracy µm/300 mm	Suffix	Axial clearance max. mm
MDKUVE15-240-KGT	20	5	50	F	0,05
				FM	Preloaded
		10		F	0,05
				FM	Preloaded
		20		F	0,05
		50			
MDKUVE25-365-KGT MDKUSE25-365-KGT	32	5	50	F	0,05
				FM	Preloaded
		10		F	0,05
				FM	Preloaded
		20		F	0,05
				FM	Preloaded
		40		F	0,05
MDKUVE35-500-KGT	40	5	50	F	0,05
				FM	Preloaded
		10		F	0,05
				FM	Preloaded
		20		F	0,05
				FM	Preloaded
		40		F	0,05

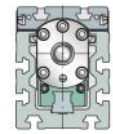

Ordering example, ordering designation

Available designs of tandem actuators MDKUVE and MDKUSE, see table.

Available designs

Design	Tandem actuator with four-row or six-row linear recirculating ball bearing and guideway assembly		
Size	Size code		
Carriage plate length	Length	L	mm
Type of drive	Ball screw drive	KGT	
	Without ball screw drive	KGT-OA	
Spindle dimensions	Spindle pitch	P	mm
Design of nut	Single nut	F/M	
	Double nut, preloaded	FM/ MM	
Spindle support	None		
	One	SPU	
	Two	2SPU	
Additional carriage unit	Second, non-driven carriage unit	WN2	
	Spacing L_{xn} between carriage units		mm
Location of carriage unit	Threaded holes		
	T-slots	N	
Lengths	Total length	L_{tot}	mm
	Total stroke length	G_H	mm

● Standard scope of delivery.

■ Design not available.

Designation and suffixes															
MDKUVE								MDKUSE				MDKUVE			
15				25				25				35			
240				365				365				500			
KGT															
KGT-OA															
5	10	20	50	5	10	20	40	5	10	20	40	5	10	20	40
F	F	F	F	F	F	F	F	F	F	F	F	F	F	F	F
FM	FM	■	■	FM	FM	FM	■	FM	FM	FM	■	FM	FM	FM	■
●				●				●				●			
SPU				SPU				SPU				SPU			
2SPU				2SPU				2SPU				2SPU			
WN2				WN2				WN2				WN2			
State value for L_{x1} (L_{xn} ≧ 20 mm)															
■				■				■				■			
N				N				N				N			
to be calculated from total stroke length, see page 417															
to be calculated from effective stroke length, see page 417															

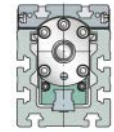

Monorail guidance system, ball screw drive

Tandem actuator with two parallel six-row linear recirculating ball bearing and guideway assemblies	MDKUSE
Size code	25
Carriage plate length L	365 mm
Drive by ball screw drive	KGT
Spindle pitch P	5 mm
Preloaded double nut	FM
Spindle support	SPU
Carriage unit with T-slots	N
Total length L_{tot}	3 991 mm
Total stroke length G_H	3 000 mm

Ordering designation

MDKUSE25-365-KGT/5-FM-SPU-N/3991-3000, *Figure 30*

Note total length of carriage unit.

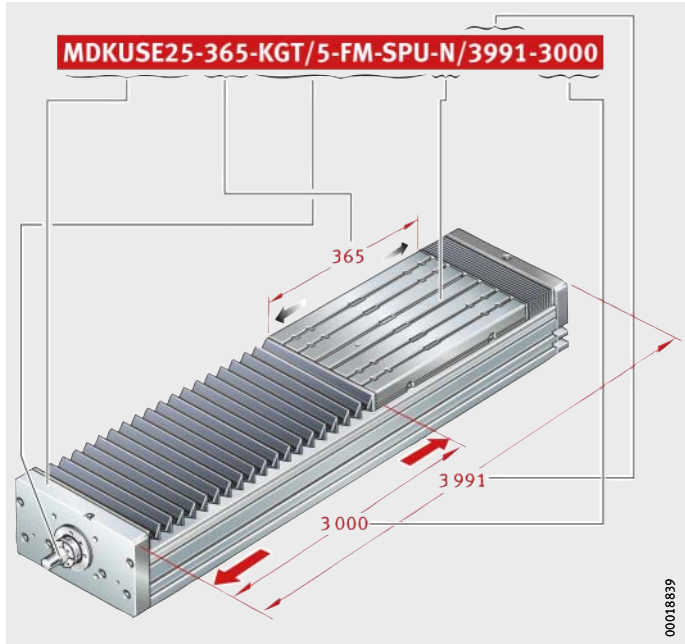

Figure 30
Ordering designation

Monorail guidance system, without ball screw drive

Tandem actuator with two parallel six-row linear recirculating ball bearing and guideway assemblies	MDKUSE
Size code	25
Carriage plate length L	365 mm
Without ball screw drive	OA
Carriage unit with T-slots	N
Total length L_{tot}	3 986 mm
Total stroke length G_H	3 000 mm

Ordering designation

MDKUSE25-365-KGT-OA-N/3986-3000, *Figure 31*

Note total length of carriage unit.

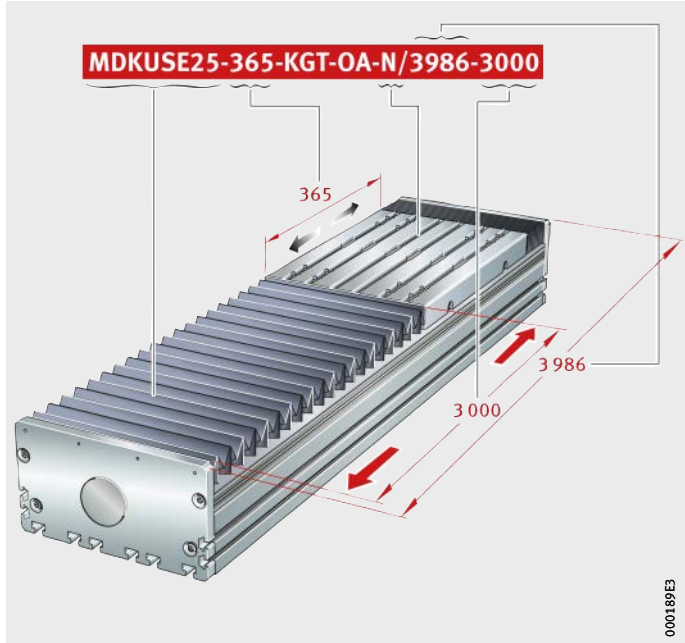

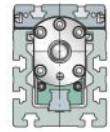

Figure 31
Ordering designation

Monorail guidance system, ball screw drive

Tandem actuator with two parallel six-row linear recirculating ball bearing and guideway assemblies	MDKUSE
Size code	25
Carriage plate length L	365 mm
Drive by ball screw drive	KGT
Spindle pitch P	10 mm
Preloaded double nut	FM
Second, non-driven carriage unit	WN2
Spacing between carriage units L_{x1}	500 mm
Carriage unit with T-slots	N
Total length L_{tot}	3 676 mm
Total stroke length G_H	2 000 mm

Ordering designation

MDKUSE25-365-KGT/10-FM-WN2-N/3676-2000 (L_{x1} = 500 mm), *Figure 32*

Note total length of first carriage unit and carriage unit length of second carriage unit. Spacing L_{x1} between carriage units must be stated.

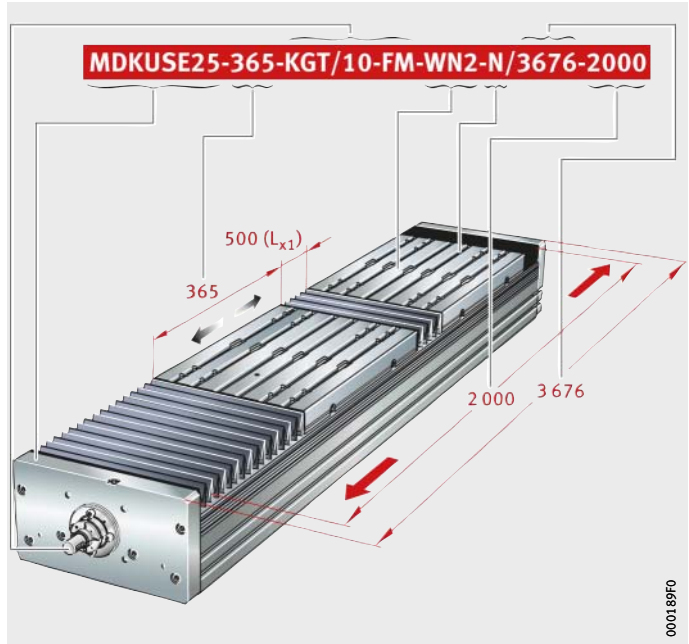

Figure 32
Ordering designation

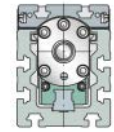

Tandem actuators

Two four-row linear recirculating ball bearing and guideway assemblies arranged in parallel
With or without ball screw drive
Basic design

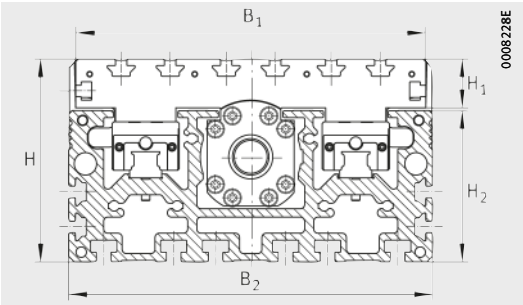

MDKUVE..-KGT/..-N

Dimension table · Dimensions in mm

Designation	Dimensions			Mounting dimensions													
	B_2	H	L	b_{87}	B_1	B_5	d_{85} h6	d_{86} h7	G_{87}	h_{13}	h_{14}	h_{15}	h_{16}	h_{85}	h_{87}	H_1	H_2
MDKUVE15-240-KGT/5-N	180	105	240	68	176	179	13	60	M6	25	45	–	–	60,5	46	29,3	74,5
MDKUVE15-240-KGT/10-N																	
MDKUVE15-240-KGT/20-N																	
MDKUVE15-240-KGT/50-N																	
MDKUVE15-240-KGT-OA-N	180	105	240	–	176	179	–	–	–	25	45	–	–	–	–	29,3	74,5
MDKUVE25-365-KGT/5-N	260	145	365	90	250	259	19	75	M8	25	50	–	–	75	70	35	108
MDKUVE25-365-KGT/10-N																	
MDKUVE25-365-KGT/20-N																	
MDKUVE25-365-KGT/40-N																	
MDKUVE25-365-KGT-OA-N	260	145	365	–	250	259	–	–	–	25	50	–	–	–	–	35	108
MDKUVE35-500-KGT/5-N	415	200	500	92	410	414	25	80	M10	30	60	90	120	105	92	40	157
MDKUVE35-500-KGT/10-N																	
MDKUVE35-500-KGT/20-N																	
MDKUVE35-500-KGT/40-N																	
MDKUVE35-500-KGT-OA-N	415	200	500	–	410	414	–	–	–	30	60	90	120	–	–	40	157

Calculation of lengths L_2 and L_{tot}, see page 417.

Calculation of effective length B_L of bellows, see page 417.

1) Utilisation of the T-slots is restricted.

2) ① 4 lubrication nipples DIN 3405-A M6, see page 422.
② Filling openings in end plate, see page 423.
③ Switching tag connectors on carriage unit, see page 424.

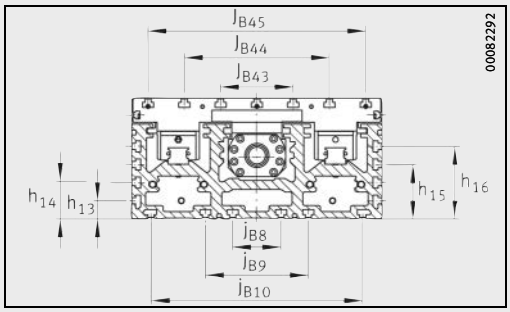

MDKUVE..-KGT/..-N

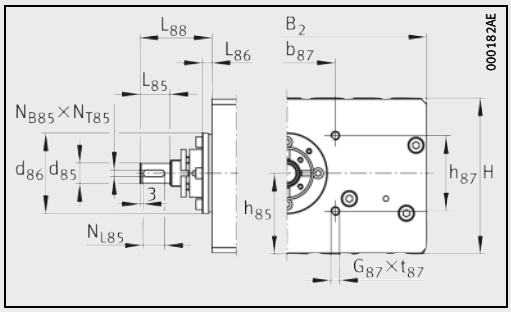

MDKUVE..-KGT/..-N · Drive flange, drive shaft

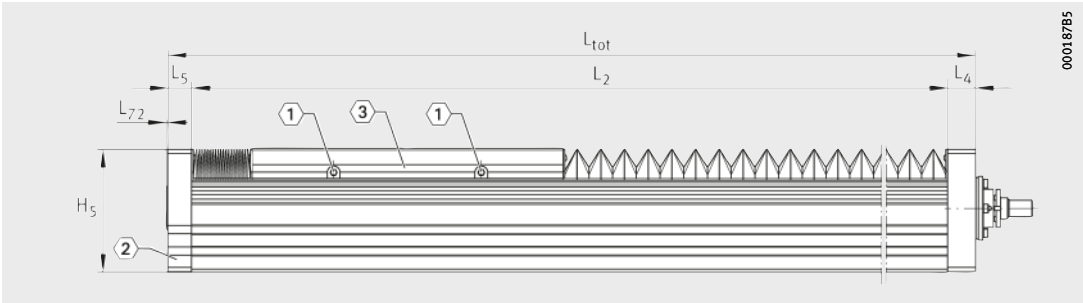

MDKUVE..-KGT/..-N
1, 2, 3 [2)]

H_5	j_{B8}	j_{B9}	j_{B10}	J_{B43}	J_{B44}	J_{B45}	l_{41} [1)]	l_{42} [1)]	L_4	L_5	L_{72}	L_{85}	L_{86}	L_{88}	N_{B43}	N_{L43}	N_{B85} P9	N_{L85}	N_{T85}	S_{41} [1)]	t_{87} max.
103,5	70	140	–	80	130	–	20	26	28	28	–	23	8	42	14	20	5	18	3,5	10	15
103,5	70	140	–	80	130	–	20	26	–	28	–	–	–	–	14	20	–	–	–	10	–
144	50	110	210	35	115	185	30	35	33	28	2	28	9	67	14	20	6	20	3,5	13	20
144	50	110	210	35	115	185	30	35	–	28	2	–	–	–	14	20	–	–	–	13	–
198	80	170	350	120	240	360	–	–	48	30	2	45	9	86	20	30	8	36	4	–	25
198	80	170	350	120	240	360	–	–	–	30	2	–	–	–	20	30	–	–	–	–	–

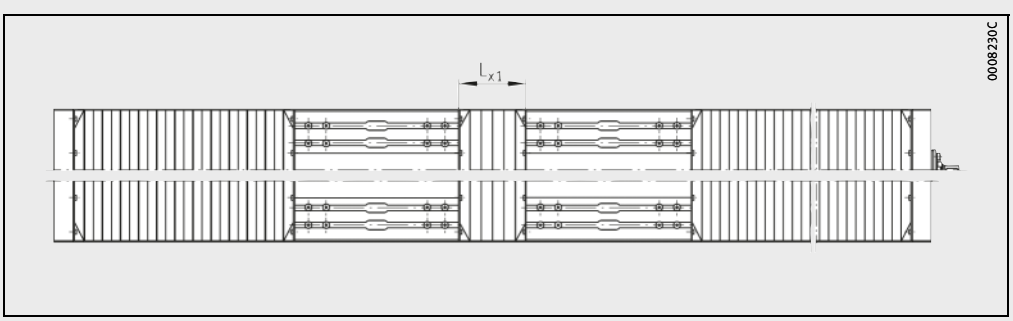

MDKUVE..-KGT/..-N, MDKUVE..-KGT-OA..-N · Top view, spacing between carriage units L_{x1} [1)]

Tandem actuators

Two four-row linear recirculating ball bearing and guideway assemblies arranged in parallel
With or without ball screw drive
Second, non-driven carriage unit

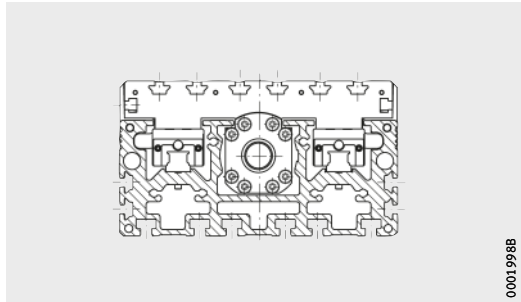

MDKUVE..-KGT/..-WN2-N

Dimension table · Dimensions in mm

Designation Second, non-driven carriage	Dimensions $L_{x1\ min}$
MDKUVE15-240-KGT/5-WN2-N	20
MDKUVE15-240-KGT/10-WN2-N	
MDKUVE15-240-KGT/20-WN2-N	
MDKUVE15-240-KGT/50-WN2-N	
MDKUVE15-240-KGT-OA-WN2-N	20
MDKUVE25-365-KGT/5-WN2-N	20
MDKUVE25-365-KGT/10-WN2-N	
MDKUVE25-365-KGT/20-WN2-N	
MDKUVE25-365-KGT/40-WN2-N	
MDKUVE25-365-KGT-OA-WN2-N	20
MDKUVE35-500-KGT/5-WN2-N	20
MDKUVE35-500-KGT/10-WN2-N	
MDKUVE35-500-KGT/20-WN2-N	
MDKUVE35-500-KGT/40-WN2-N	
MDKUVE35-500-KGT-OA-WN2-N	20

Other geometrical features, see page 434 and page 435.

1) L_{x1} = spacing between carriage units, $L_{x1\ min}$ = minimum spacing between two carriage units.

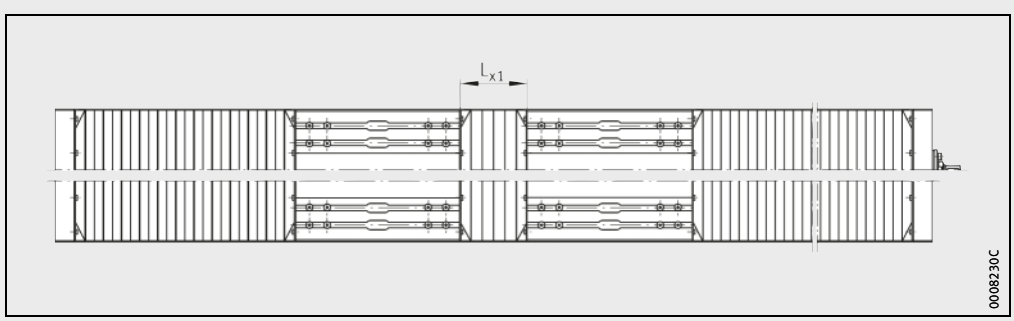

MDKUVE..-KGT-/..-WN2-N, MDKUVE..-KGT-OA-WN2-N · Top view, spacing between carriage units L_{x1} [1)]

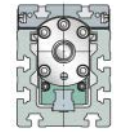

Tandem actuators

Two four-row linear recirculating ball bearing and guideway assemblies arranged in parallel
With or without ball screw drive
Performance data

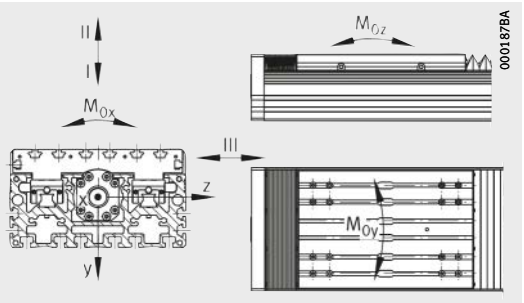

Load directions

Performance data

Designation	Carriage unit guidance system for each carriage unit									Moment of inertia of area of carrier profile	
	Basic load ratings per carriage unit						Permissible static moment ratings per carriage unit[1]				
	Load direction I Compressive load		Load direction II Tensile load		Load direction III Lateral load						
	dyn. C N	stat. C_0 N	dyn. C N	stat. C_0 N	dyn. C N	stat. C_0 N	$M_{0x\ per}$ Nm	$M_{0y\ per}$ Nm	$M_{0z\ per}$ Nm	I_y cm^4	I_z cm^4
MDKUVE15-240-KGT/5 (-WN2)-N	19 000	58 000	19 000	58 000	19 000	58 000	2 450	3 850	3 850	1 636	200
MDKUVE15-240-KGT/10 (-WN2)-N											
MDKUVE15-240-KGT/20 (-WN2)-N											
MDKUVE15-240-KGT/50 (-WN2)-N											
MDKUVE15-240-KGT-OA (-WN2)-N	19 000	58 000	19 000	58 000	19 000	58 000	2 450	3 850	3 850	1 636	200
MDKUVE25-365-KGT/5 (-WN2)-N	47 200	148 000	47 200	148 000	47 200	148 000	9 200	15 300	15 300	7 069	899
MDKUVE25-365-KGT/10 (-WN2)-N											
MDKUVE25-365-KGT/20 (-WN2)-N											
MDKUVE25-365-KGT/40 (-WN2)-N											
MDKUVE25-365-KGT-OA (-WN2)-N	47 200	148 000	47 200	148 000	47 200	148 000	9 200	15 300	15 300	7 069	899
MDKUVE35-500-KGT/5 (-WN2)-N	100 000	288 000	100 000	288 000	100 000	288 000	35 500	19 000	22 500	42 680	5 030
MDKUVE35-500-KGT/10 (-WN2)-N											
MDKUVE35-500-KGT/20 (-WN2)-N											
MDKUVE35-500-KGT/40 (-WN2)-N											
MDKUVE35-500-KGT-OA (-WN2)-N	100 000	288 000	100 000	288 000	100 000	288 000	35 500	19 000	22 500	42 680	5 030

1) The values are single loads and apply when the underside of the actuator is fully supported.
If there are several carriage units per actuator or combined loads are present, these must be reduced.

2) F = single nut
FM = preloaded double nut (flanged and cylindrical nuts)

3) Basic load ratings in accordance with DIN 69051. Due to the modified calculation algorithms in DIN 69051, the basic load ratings C_a and C_0 may differ in comparison with older data.

4) Basic load ratings in axial direction: design criteria for locating bearing, see Catalogue HR 1, Rolling Bearings.

5) Maximum permissible drive torque on drive stud.

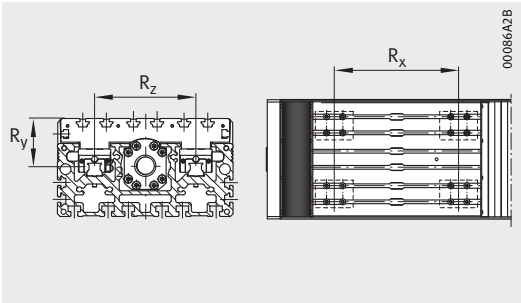

Mounting geometry of carriages

Carriage				Drive									
				Basic load ratings of spindle nut			Basic load ratings of spindle bearing arrangement (locating bearing)				Spindle		
	Spacings			Nut design[2]						Maximum drive torque[5]	d_0	P	Mass moment of inertia
	R_x mm	R_y mm	R_z mm		dyn. C_a[3] N	stat. C_0[3] N		dyn. C_a[4] N	stat. C_{0a}[4] N	Nm	mm	mm	kg · cm²
4×KWVE15-B-H	174	56,5	104	F/FM	10 500	16 600	ZKLF1560-2RS-PE	17 900	28 000	32	20	5	0,846
					12 700	22 100					20	10	
				F	11 600	18 400					20	20	0,883
					13 000	24 600					20	50	0,845
4×KWVE15-B-H	174	56,5	104	–	–	–	–	–	–	–	–	–	–
4×KWVE25-B-H	270	72,8	150	F/FM	21 500	49 300	ZKLF2575-2RS-PE	27 500	55 000	50	32	5	6,43
					33 400	54 500					32	10	6,43
					29 700	59 800					32	20	6,43
				F	14 900	32 400					32	40	
4×KWVE25-B-H	270	72,8	150	–	–	–	–	–	–	–	–	–	–
4×KWVE35-H	382	93,8	260	F, FM	23 800	63 100	ZKLF3080-2RS-PE	29 000	64 000	125	40	5	16,4
					38 000	69 100					40	10	14,2
					33 300	76 100					40	20	16,4
				F	35 000	101 900					40	40	
4×KWVE35-H	382	93,8	260	–	–	–	–	–	–	–	–		–

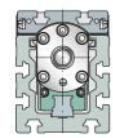

Tandem actuators

Two six-row linear recirculating ball bearing and guideway assemblies arranged in parallel
With or without ball screw drive
Basic design

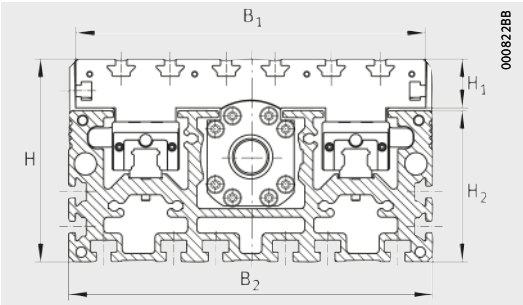

MDKUSE..-KGT/..-N

Dimension table · Dimensions in mm

Designation	Dimensions			Mounting dimensions												
	B_2	H	L	b_{87}	B_1	B_5	d_{85} h6	d_{86} h7	G_{87}	h_{13}	h_{14}	h_{85}	h_{87}	H_1	H_2	H_5
MDKUSE25-365-KGT/5-N	260	145	365	90	250	259	19	75	M8	25	50	75	70	35	108	144
MDKUSE25-365-KGT/10-N																
MDKUSE25-365-KGT/20-N																
MDKUSE25-365-KGT/40-N																
MDKUSE25-365-KGT-OA-N	260	145	365	–	250	259	–	–	–	25	50	–	–	35	108	144

Calculation of lengths L_2 and L_{tot}, see page 417.

Calculation of effective length B_L of bellows, see page 417.

1) Utilisation of the T-slots is restricted.

2) ① 4 lubrication nipples NIP-DIN 3405-A M6, see page 422.
② Filling openings in end plate, see page 423.
③ Switching tag connectors on carriage unit, see page 424.

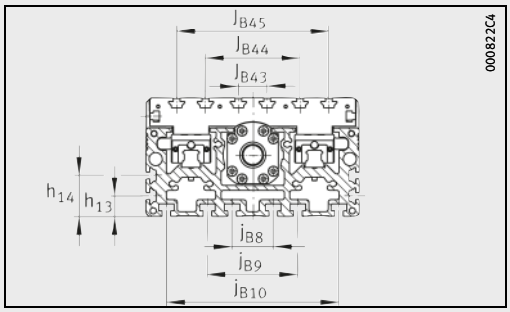

MDKUSE..-KGT/..-N

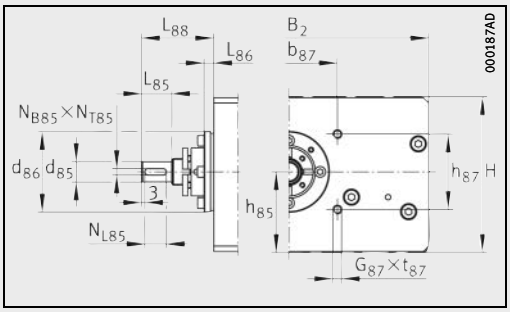

MDKUSE..-KGT/..-N · Drive flange, drive shaft

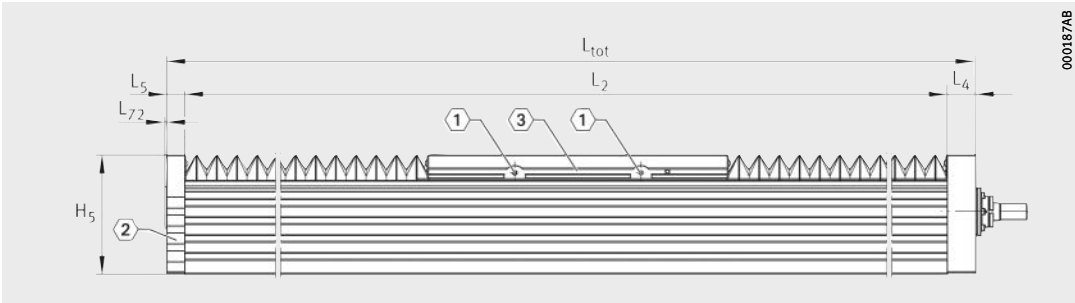

MDKUSE..-KGT/..-N
1, 2, 3 [2)]

j_{B8}	j_{B9}	j_{B10}	J_{B43}	J_{B44}	J_{B45}	l_{41} [1)]	l_{42} [1)]	L_4	L_5	L_{72}	L_{85}	L_{86}	L_{88}	N_{B43}	N_{L43}	N_{B85}	N_{L85}	N_{T85}	S_{41} [1)]	t_{87} max.
50	110	210	35	115	185	30	35	33	28	2	28	9	67	14	20	6^{P9}	20	3,5	13	20
50	110	210	35	115	185	30	35	–	28	2	–	–	–	14	20	–	–	–	13	–

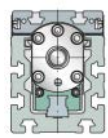

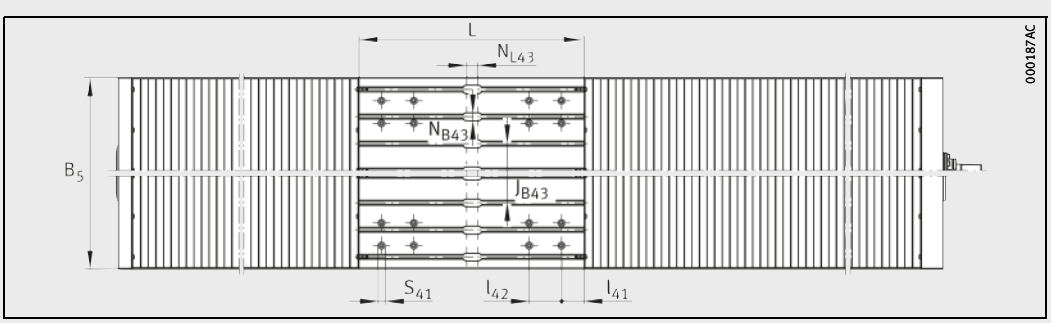

MDKUSE..-KGT/..-N, MDKUSE..-KGT-OA..-N · Top view, spacing between carriage units Lx1 [1)]

Tandem actuators

Two six-row linear recirculating ball bearing and guideway assemblies arranged in parallel
With or without ball screw drive
Second, non-driven carriage unit

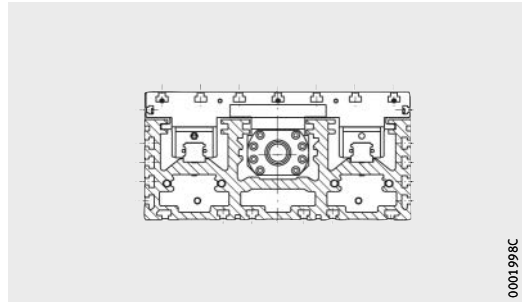

MDKUSE..-KGT/..-WN2-N

Dimension table · Dimensions in mm

Designation Second, non-driven carriage	Dimensions $L_{x1\ min}$
MDKUSE25-365-KGT/5-WN2-N	20
MDKUSE25-365-KGT/10-WN2-N	
MDKUSE25-365-KGT/20-WN2-N	
MDKUSE25-365-KGT/40-WN2-N	
MDKUSE25-365-KGT-OA-WN2-N	20

Other geometrical features, see page 440 and page 441.

1) L_{x1} = spacing between carriage units, $L_{x1\ min}$ = minimum spacing between two carriage units.

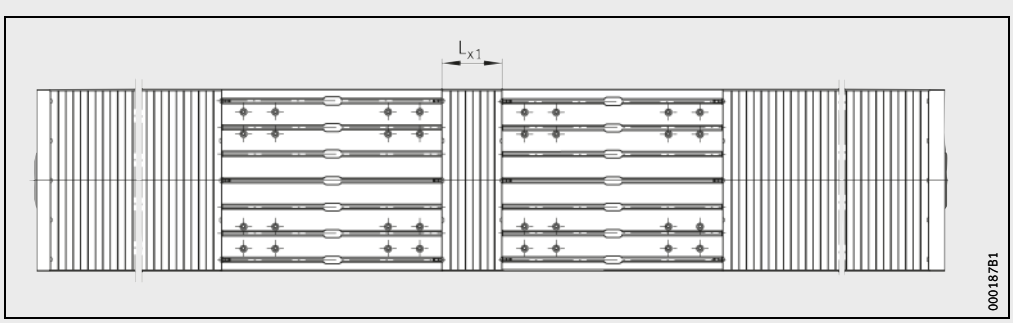

MDKUSE..-KGT/..-WN2-N, MDKUSE..-KGT-OA-WN2-N · Top view, spacing between carriage units L_{x1} [1)]

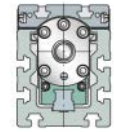

Tandem actuators

Two six-row linear recirculating ball bearing and guideway assemblies arranged in parallel
With or without ball screw drive
Performance data

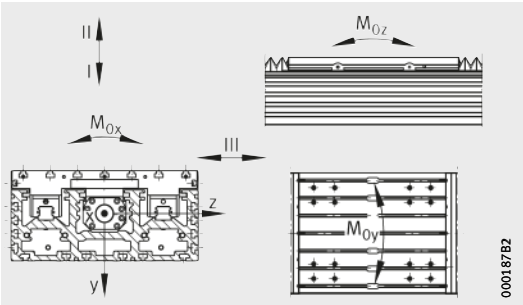

Load directions

Performance data

Designation	Carriage unit guidance system for each carriage unit					
	Basic load ratings per carriage unit					
	Load direction I Compressive load		Load direction II Tensile load		Load direction III Lateral load	
	dyn. C N	stat. C_0 N	dyn. C N	stat. C_0 N	dyn. C N	stat. C_0 N
MDKUSE25-365-KGT/5 (-WN2)-N	73 900	268 000	60 400	172 000	56 200	184 000
MDKUSE25-365-KGT/10 (-WN2)-N						
MDKUSE25-365-KGT/20 (-WN2)-N						
MDKUSE25-365-KGT/40 (-WN2)-N						
MDKUSE25-365-KGT-OA (-WN2)-N	73 900	268 000	60 400	172 000	56 200	184 000

1) The values are single loads and apply when the underside of the actuator is fully supported.
If there are several carriage units per actuator or combined loads are present, these must be reduced.

2) F = single nut
FM = preloaded double nut (flanged and cylindrical nuts)

3) Basic load ratings in accordance with DIN 69051. Due to the modified calculation algorithms in DIN 69051, the basic load ratings C_a and C_0 may differ in comparison with older data.

4) Basic load ratings in axial direction: design criteria for locating bearing, see Catalogue HR 1, Rolling Bearings.

5) Maximum permissible drive torque on drive stud.

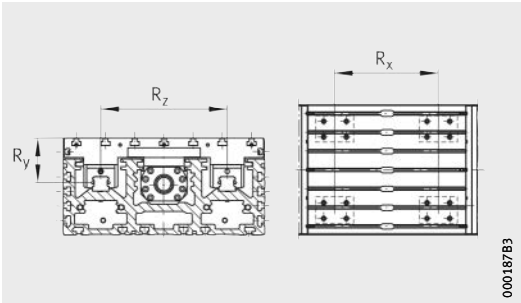

Mounting geometry of carriages

Permissible static moment ratings per carriage unit[1)]			Carriage				Moment of inertia of area of carrier profile		Drive		
				Spacings					Basic load ratings of spindle nut Nut design[2)]		
$M_{0x\ per}$ Nm	$M_{0y\ per}$ Nm	$M_{0z\ per}$ Nm		R_x mm	R_y mm	R_z mm	I_y cm^4	I_z cm^4		dyn. C_a[3)] N	stat. C_0[3)] N
9 300	16 500	16 100	4×KWSE25-H	270	69,3	150	7 069	899	F, FM	21 500	49 300
										33 400	54 500
										29 700	59 800
									F	14 900	32 400
9 300	16 500	16 100	4×KWSE25-H	270	69,3	150	7 069	899	–	–	–

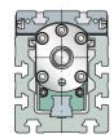

Performance data (continued)

Designation	Drive						
	Basic load ratings of spindle bearing arrangement (locating bearing)				Spindle		
	Bearing fitted			Maximum drive torque[5)]	d_0	P	Mass moment of inertia
		dyn. C_a[4)] N	stat. C_{0a}[4)] N	Nm	mm	mm	kg · cm^2
MDKUSE25-365-KGT/5 (-WN2)-N	ZKLF2575-2RS-PE	27 500	55 000	50	32	5	6,43
MDKUSE25-365-KGT/10 (-WN2)-N					32	10	
MDKUSE25-365-KGT/20 (-WN2)-N					32	20	
MDKUSE25-365-KGT/40 (-WN2)-N					32	40	
MDKUSE25-365-KGT-OA (-WN2)-N	–	–	–	–	–		–

Clamping actuator with ball screw drive

Clamping actuator with ball screw drive

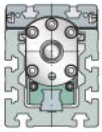

Basic design

One linear recirculating ball bearing and guideway assembly

Ball screw drive

MKKUVE20-200-KGT/5..-N

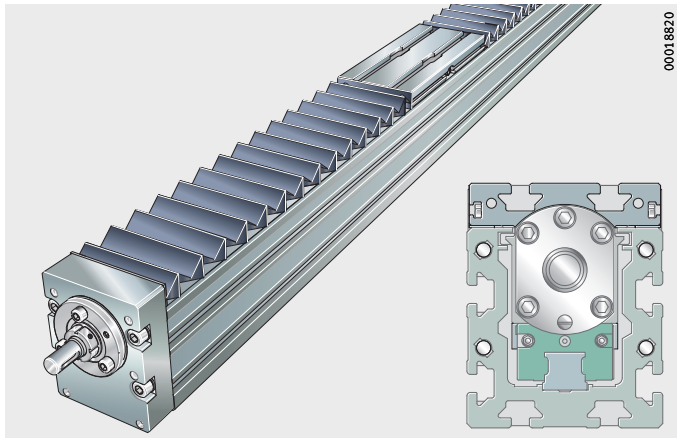

Clamping actuator with ball screw drive

Features

Actuators MKKUVE..-KGT correspond in their basic design and technical characteristics to the actuators MKUVE..-KGT.
The features of clamping actuators substantially match the features of linear actuators, see page 347. The differences are described on the following pages.

In the case of clamping actuators, the carriage units move in synchronised opposing directions.

Spindle support

Actuators MKKUVE20..-KGT/5 with a total length of more than 2000 mm can be fitted with movable spindle supports (suffix SPU).

Designs

Clamping actuators of series MKKUVE..-KGT are available in various designs, see table. The possible designs and combinations vary according to the size and actuator type.

Available designs

Suffix	Description	Design
–	Two carriage units moving in opposing directions	Basic design
N	Fixing slots in carriage unit	Standard
SPU	One spindle support	Standard

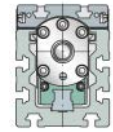

Special designs

Special designs are available by agreement. Examples of these are clamping actuators:

- with a linear recirculating ball bearing and guideway assembly and ball screw drive with anti-corrosion protection
- with bellows resistant to welding beads
- without bellows
- with an extended carriage unit
- with compressed air connections in the support rail
- with special machining.

Ball screw drive

The configured “right/left” thread of the spindle is rolled, has a pitch value of 5 mm and is available with a single nut with clearance or a preloaded double nut.

For the pitch-dependent axial clearance of the single nut, see page 382.

The spindle is supported on the locating bearing side by an axial angular contact ball bearing ZKLF..-2RS-PE. This bearing is greased for life.

The screw drive and guidance system are protected against contamination by bellows.

One spindle support can be fitted.

Ball screw drive variants

The ball screw drive has a pitch value of P = 5 mm.
The ball screw drive is available with a single nut (suffix F) or with a double nut (suffix FM).

Mechanical accessories

A large number of accessories are available for clamping actuators with monorail guidance system and ball screw drive.
The allocation of accessories, see table, is valid if the data match the Technical principles, page 13, and the Design and safety guidelines, page 451.

Allocation

Linear actuator / size	MKKUVE..-KGT-N	20
Fixing brackets, see page 811		
WKL-65×65×30-N		①
WKL-65×65×35-N		①
WKL-90×90×35-N		①
Clamping lugs, see page 829		
SPPR-13,5×20		①
SPPR-23×30		①
T-nuts, see page 835		
MU-DIN 508 M6×8		①
MU-M4×8 (similar to DIN 508)		①
T-nuts made from corrosion-resistant steel, see page 835		
MU-DIN 508 M6×8-RB		①
T-bolts, see page 835		
SHR DIN 787-M8×8×32		①
Rotatable T-nuts, see page 836		
MU-M4×8-RHOMBUS		①
MU-M6×8-RHOMBUS		①
Positionable T-nuts, see page 836		
MU-M4×8-POS		①
MU-M5×8-POS		①
MU-M6×8-POS		①
MU-M8×8-POS		①
Hexagon nuts, see page 837		
MU-ISO 4032 M4		①
MU-ISO 4032 M8		①
T-strips, see page 837		
LEIS-M6/8-T-NUT-SB-ST		①
LEIS-M8/8-T-NUT-SB-ST		①
LEIS-M6/8-T-NUT-HR-ST		②
LEIS-M6/8-T-NUT-HR-ALU		②
LEIS-M6/8-T-NUT-ST		②
Connector sets (parallel connectors), see page 838		
VBS-PVB8		①
VBS-PVB8/10		①
Slot closing strips, see page 838		
NAD-8×4,5		①
NAD-8×11,5		①

① Suitable.
② Suitable and T-strips must already have been inserted at the time of despatch.

Design and safety guidelines

See section Actuators with ball screw drive, page 344. The following pages describe exclusively the differences between the clamping actuator and the linear actuators.

Idling drive torque

The idling drive torque M_0 of clamping actuators is calculated for a constant velocity and for a horizontal (M_{0h}) or vertical (M_{0v}) mounting position, *Figure 1* and *Figure 2*. The idling drive torque increases with increasing travel velocity. The data in the diagrams are maximum values.

MKKUVE20..-KGT/5-F
MKKUVE20..-KGT/5-FM

n = spindle speed
M_{0h} = idling drive torque

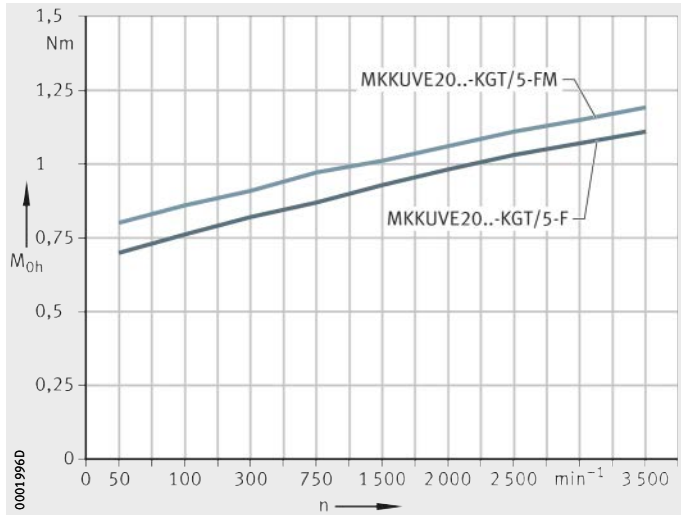

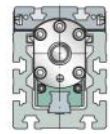

Figure 1
Idling drive torque
Horizontal mounting position

MKKUVE20..-KGT/5-F
MKKUVE20..-KGT/5-FM

n = spindle speed
M_{0v} = idling drive torque

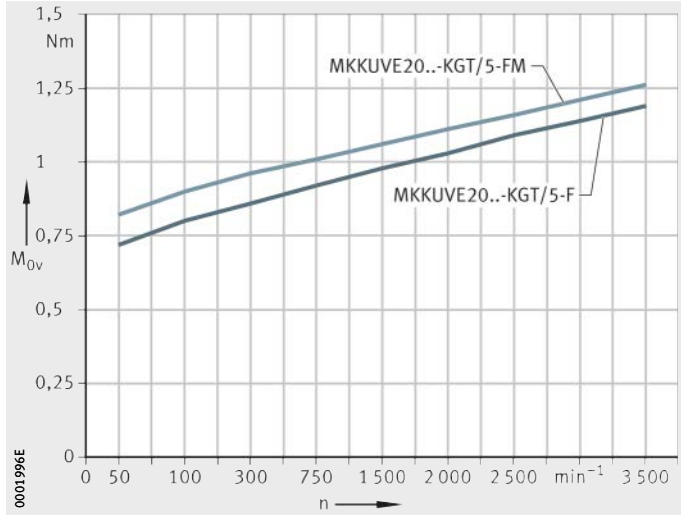

Figure 2
Idling drive torque
Vertical mounting position

Length calculation of clamping actuators

The length calculation of clamping actuators is based on the required effective stroke length N_H. The effective stroke length N_H must be increased by the addition of safety spacing values on both sides of the travel distance.

The total length L_{tot} of the clamping actuator is determined from the support rail length L_2 and the lengths of the end plate L_4 and end plate L_5.

Parameters for length calculation

G_H mm
Total stroke length

N_H mm
Effective stroke length

S mm
Safety spacing, for minimum values see tables, page 453

L mm
Length of carriage plate

L_2 mm
Length of support rail

L_4 mm
Length of end plate

L_5 mm
Length of end plate

L_{tot} mm
Total length of actuator

L_k mm
Spacing between the carriage units moving in opposing directions

B_L mm
Effective length of bellows

F_{BL} –
Effective length factor according to actuator type.

Total stroke length

The total stroke length G_H is determined from the required effective stroke length and the safety spacings, which must correspond to at least the spindle pitch P.

$$G_H = 2 \cdot N_H + 2 \cdot S$$

Support rails

Actuators with monorail guidance system and ball screw drive are only available with a single-piece support rail. The maximum length of a support rail is 5 850 mm.

Minimum spacing $L_{k\,min}$ between carriage units

The minimum spacing L_k between the carriage units when moved together is $0{,}17 \cdot G_H + 20$ mm.

Total length L_{tot} and support rail length L_2

The following equations are designed for the clamping actuator. The parameters and their position can be found in *Figure 3* and the table.

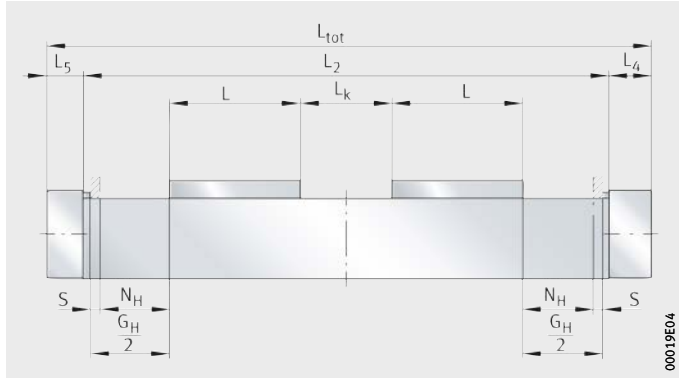

Figure 3
Length parameters

Support rail length with bellows

$$L_2 = G_H \cdot F_{BL} + 2 \cdot L + L_k + 25$$

Total length

$$L_{tot} = L_2 + L_4 + L_5$$

Length parameters

Designation	L mm	L_4 mm	L_5 mm	S mm	F_{BL}
MKKUVE20-200-KGT/5-N	200	28	28	5	1,09

Effective length of bellows

The effective length of bellows is the length occupied by the bellows in the fully compressed state. Calculation is based on the total stroke length G_H, *Figure 4*, equation and table, page 453.

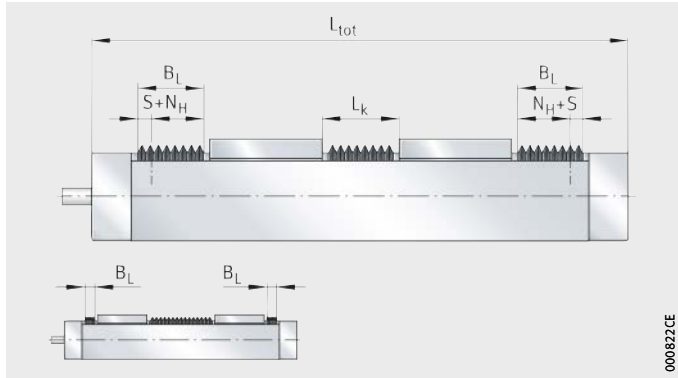

Figure 4
Effective length calculation

$$B_L = \frac{G_H \cdot (F_{BL} - 1) + 25}{2}$$

B_L mm
Effective length of bellows

G_H mm
Total stroke length

F_{BL} –
Effective length factor according to actuator type, see table, page 453.

Mass calculation

The total mass of an actuator is calculated from the mass of the actuator without carriage units and the two carriage units. Insert the values from the table in the following equation. The values m_{LAW} and m_{BOL} are mandatory.

$$m_{tot} = m_{LAW} + m_{BOL}$$

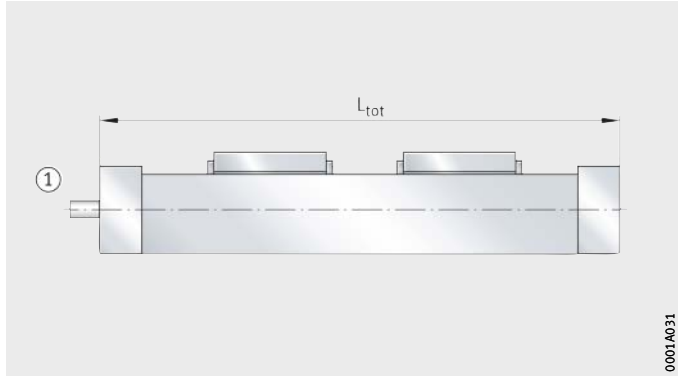

① Basic design with two carriage units

Figure 5
Basic design

Values for mass calculation

Designation	Mass	
	Carriage unit m_{LAW} ≈kg	Actuator without carriage unit m_{BOL} ≈kg
MKKUVE20-200-KGT..-N	4,32[1)]	$(L_{tot} - 56) \cdot 0{,}0119 + 2{,}18$

1) Two carriage units.

Lubrication

The information on the lubrication of the clamping actuator matches the information on the lubrication of linear actuators, see page 368. The only differences are in the relubrication quantities and relubrication points.

Relubrication quantities

Relubrication should be carried out wherever possible with several partial quantities at various times instead of the complete quantity at the time of the relubrication interval. Relubrication quantities, see table.

Grease quantities

Clamping actuator	Relubrication quantity per carriage unit, lubrication nipple and longitudinal side ≈g
MKKUVE20-200-KGT/5-F MKKUVE20-200-KGT/5-FM	3 to 4

Relubrication points

The carriages and ball screw nut are relubricated via two funnel type lubrication nipples according to DIN 3405-A M6 on the longitudinal sides of each carriage unit. It can be lubricated from either the left or right side, *Figure 6* and *Figure 7*.

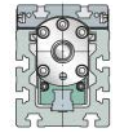

MKKUVE20..-KGT

① Funnel type lubrication nipple DIN 3405-A M6

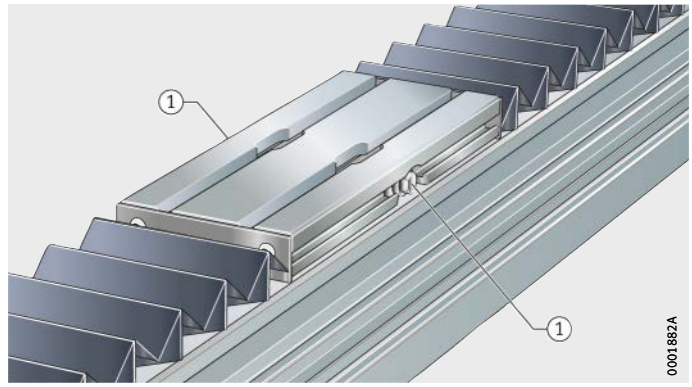

Figure 6
Lubrication points

MKKUVE20..-KGT

① Funnel type lubrication nipple DIN 3405-A M6

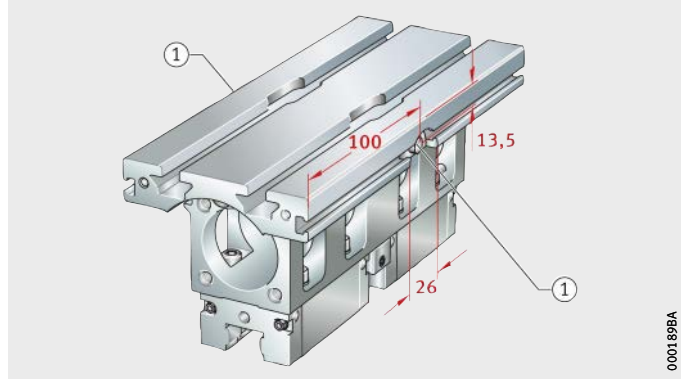

Figure 7
Position of relubrication point

During lubrication of actuators, all lubrication points on one longitudinal side of a carriage unit must always be provided with lubricant.

T-slots

The T-slots in the support rail and the carriage unit are designed for T-bolts according to DIN 787 and T-nuts according to DIN 508 (with the exception of T-slot size 4,5), *Figure 8*. The T-nuts and T-bolts are inserted via filling slots in the non-locating bearing unit.

MKKUVE20-200-KGT/5-N

① T-slot size 8, type B
② T-slot size 4,5 for hexagon nuts M4, ISO 4032

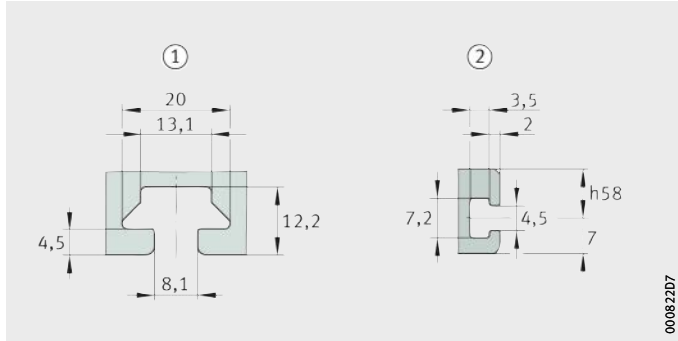

Figure 8
Sizes of T-slots in support rail and carriage unit

Filling openings

The filling openings are located on three sides of the clamping actuator: on both sides and underneath, *Figure 9*.

① Filling opening

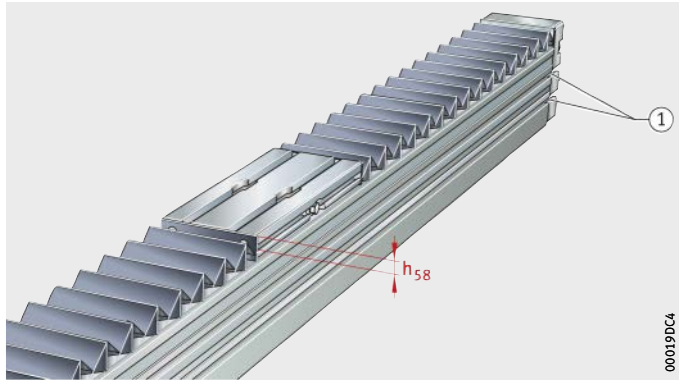

Figure 9
Filling opening in the support rail

Connectors for switching tags

Switching tags can be screw mounted to the carriage unit in order to activate switches in the adjacent construction. The position and size in the clamping actuator are shown in *Figure 10*.

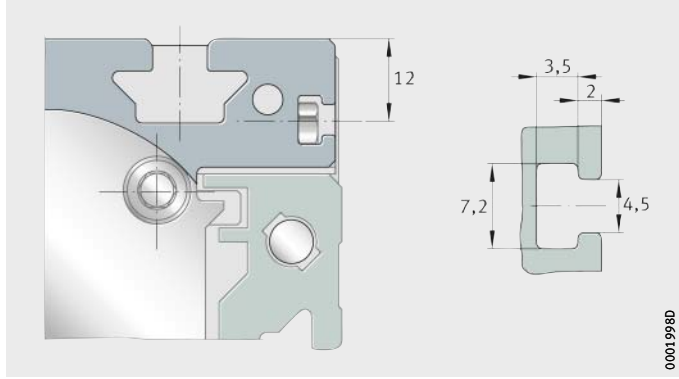

Figure 10
Connectors for switching tags on the carriage unit

Maximum permissible spindle speed

The information on the maximum permissible spindle speed of the clamping actuators matches the information for linear actuators, see page 375.

Diagram

The diagram is valid for clamping actuators with and without spindle supports, *Figure 11*.

MKKUVE20..-KGT

n = maximum permissible spindle speed
L_2 = support rail length
① Without spindle support
② One spindle support

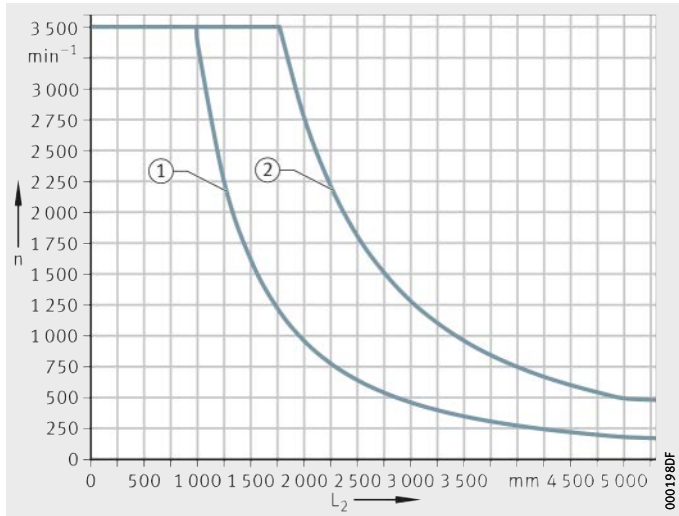

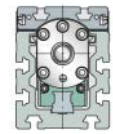

Figure 11
Maximum permissible spindle speed

Kinematic operating limits

Maximum velocities are determined as a function of the critical spindle speed, see table.

Kinematic operating limits

Actuator	Acceleration a m/s²	Maximum velocity v m/s	Maximum spindle speed n min⁻¹
MKKUVE20-200-KGT/5-F	20	0,29	3 500
MKKUVE20-200-KGT/5-FM	10		

Accuracy

Length tolerances

The information on the length tolerance of the clamping actuator matches the information on the length tolerance of linear actuators, see page 380.

Straightness of support rails

The information on the straightness of the support rails of the clamping actuator matches the information on the straightness of the support rails of linear actuators, see page 381.
Values for the straightness tolerances of support rails of clamping actuators, see table.

Tolerances

Length L_2 of support rail mm	MKKUVE20..-KGT		
	t_2 mm	t_3 mm	Torsion mm
$L_2 \leqq 1\,000$	0,4	0,3	0,8
$1\,000 < L_2 \leqq 2\,000$	0,8	0,5	1
$2\,000 < L_2 \leqq 3\,000$	1,2	0,7	1,2
$3\,000 < L_2 \leqq 4\,000$	1,5	1	1,6
$4\,000 < L_2 \leqq 5\,000$	1,9	1,2	1,8
$5\,000 < L_2 \leqq 5\,850$	2,5	1,5	2

Pitch accuracy of spindle

The information on the pitch accuracy of the spindle in the clamping actuator matches the information on the pitch accuracy of the spindle in linear actuators, see page 382. Values for the ball screw drive in clamping actuators, see table.

Designs of spindle and spindle nut

Designation	Spindle			Spindle nut		
	∅ d_0 mm	P mm	Pitch accuracy µm/300 mm	Single or double nut	Suffix	Axial clearance[1)] max. mm
MKKUVE20-200-KGT	20	5	50	Single	F	0,05
				Double	FM	Preloaded

1) Per carriage unit.

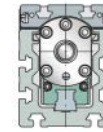

Ordering example, ordering designation

Available designs of clamping actuator MKKUVE, see table.

Available designs

Design	Clamping actuator with four-row linear recirculating ball bearing and guideway assembly			Designation and suffixes MKKUVE
Size	Size code			20
Carriage plate length	Length	L	mm	200
Type of drive	Ball screw drive	KGT		KGT
Spindle dimensions	Spindle pitch	P	mm	5
Design of nut	Single nut	F		F
	Double nut	FM		FM
Spindle support	None			●
	One	SPU		SPU
Location of carriage unit	Threaded holes			■
	T-slots		N	N
Lengths	Minimum spacing between carriage units	L_k	mm	State value, see page 452
	Total length	L_{tot}	mm	To be calculated from total stroke length, see page 452
	Total stroke length	G_H	mm	To be calculated from effective stroke length, see page 452

● Standard scope of delivery.
■ Design not available.

Monorail guidance system, ball screw drive

Clamping actuator with four-row linear recirculating ball bearing and guideway assembly	MKKUVE
Size code	20
Carriage plate length L	200 mm
Drive by ball screw drive	KGT
Spindle pitch P	5 mm
Preloaded double nut	FM
Spacing between carriage units when moved together $L_{k\,min}$	230 mm
Carriage unit with T-slots	N
Total length L_{tot}	2150 mm
Total stroke length G_H	1320 mm

Ordering designation

MKKUVE20-200-KGT/5-FM-N/2150-1320 (L_k = 230 mm), *Figure 12*

Note the total length of the carriage units and the minimum spacing $L_{k\,min}$ between the carriage units when moved together. The spacing L_k between the carriage units must be stated.

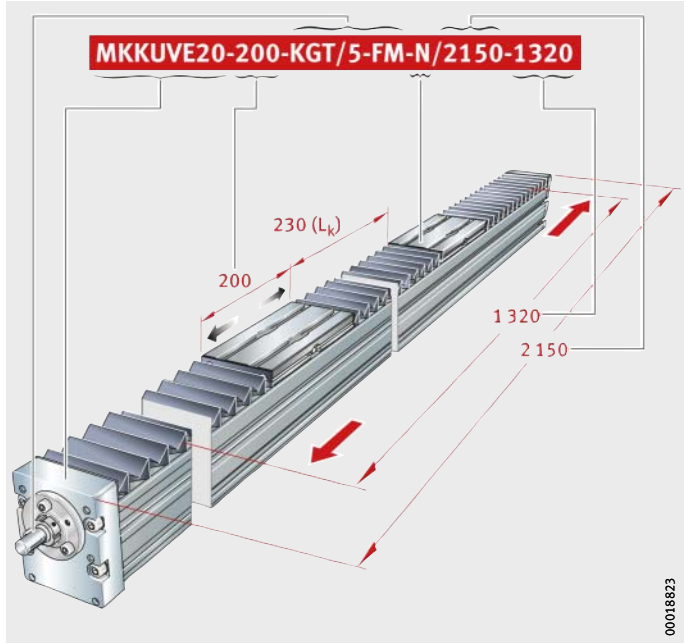

Figure 12
Ordering designation

Clamping actuator

Four-row linear recirculating ball bearing and guideway assembly
Ball screw drive
Two carriage units moving in opposing directions
Basic design

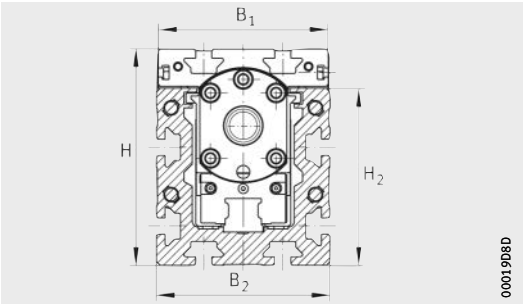

MKKUVE20-200-KGT/5-N

Dimension table · Dimensions in mm

Designation	Dimensions			Mounting dimensions									
	B_2	H	L	b_{87}	B_1	B_5	d_{85} h6	d_{86} h7	G_{87}	h_{13}	h_{14}	h_{85}	h_{87}
MKKUVE20-200-KGT/5-N	88	110	200	68	86	87	13	60	M6	20	60	71	46

Calculation of lengths L_2 and L_{tot}, see page 452.
Calculation of effective length B_L of bellows, see page 452.

1) Utilisation of the T-slots is restricted.

2) ① 2 lubrication nipples DIN 3405-A M6, see page 455.
② Filling openings in end plate, see page 456.
③ Switching tag connectors on carriage unit, see page 456.

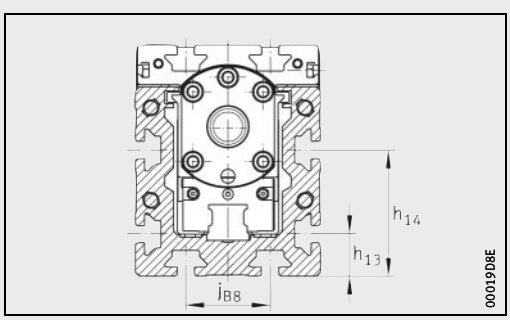

MKKUVE20-200-KGT/5-N

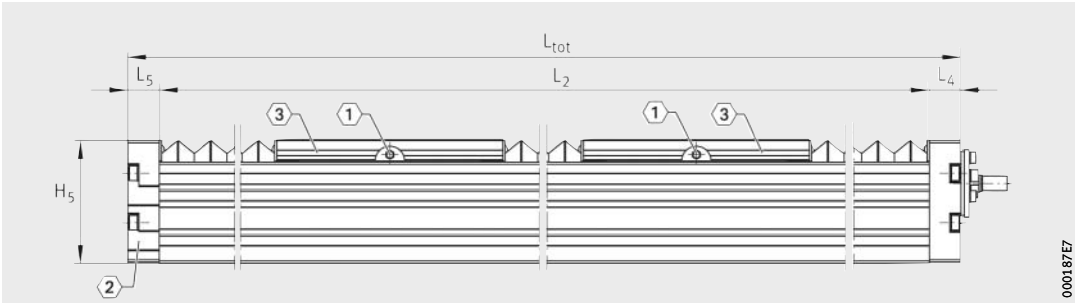

MKKUVE20-200-KGT/5-N
1, 2, 3 [2)]

H_2	H_5	j_{B8}	J_{B43}	L_4	L_5	L_{85}	L_{86}	L_{88}	N_{B43} [1)]	N_{L43} [1)]	N_{B85}	N_{L85}	N_{T85}	t_{87} max.
90	109	40	40	28	28	23	8	42	14	20	5^{P9}	18	3,5	15

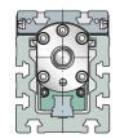

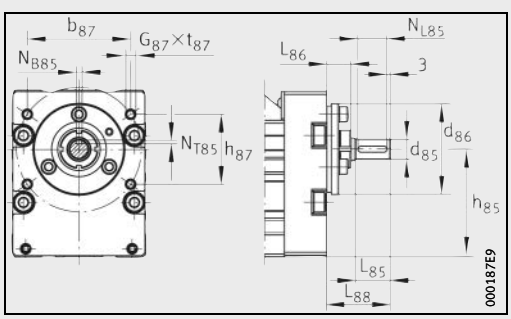

MKKUVE20-200-KGT/5-N · Drive flange, drive shaft

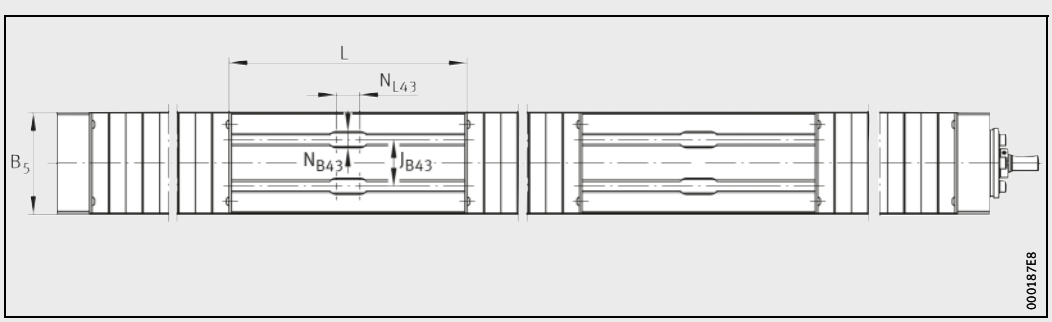

MKKUVE20-200-KGT/5-N · Top view

Clamping actuator

Four-row linear recirculating ball bearing and guideway assembly
Ball screw drive
Two carriage units moving in opposing directions
Performance data

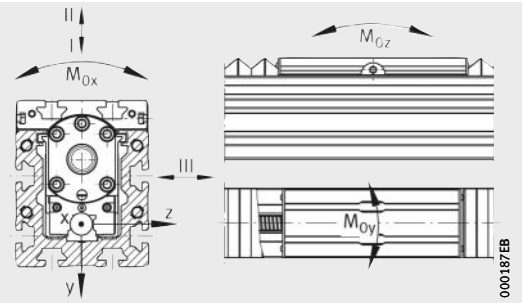

Load directions

Performance data

Designation	Carriage unit guidance system for each carriage unit									Moment of inertia of area of carrier profile	
	Basic load ratings per carriage unit						Permissible static moment ratings per carriage unit[1]				
	Load direction I Compressive load		Load direction II Tensile load		Load direction III Lateral load						
	dyn. C	stat. C_0	dyn. C	stat. C_0	dyn. C	stat. C_0	$M_{0x\ per}$	$M_{0y\ per}$	$M_{0z\ per}$	I_y	I_z
	N	N	N	N	N	N	Nm	Nm	Nm	cm^4	cm^4
MKKUVE20-200-KGT/5-N	21 300	54 000	21 300	54 000	21 300	54 000	664	1 000	1 200	281	219

1) The values are single loads and apply when the underside of the actuator is fully supported.
If there are several carriage units per actuator or combined loads are present, these must be reduced.

2) F = single nut
FM = preloaded double nut (flanged and cylindrical nuts)

3) Basic load ratings in accordance with DIN 69051. Due to the modified calculation algorithms in DIN 69051, the basic load ratings C_a and C_0 may differ in comparison with older data.

4) Basic load ratings in axial direction: design criteria for locating bearing, see Catalogue HR 1, Rolling Bearings.

5) Maximum permissible drive torque on drive stud.

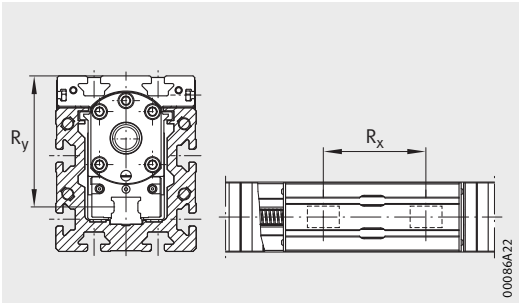

Mounting geometry of carriages

Carriage			Drive									
			Basic load ratings of spindle nut			Basic load ratings of spindle bearing arrangement (locating bearing)				Spindle		
	Spacings		Nut design[2]						Maximum drive torque[5]	d_0	P	Mass moment of inertia
	R_x	R_y		dyn. C_a[3]	stat. C_0[3]		dyn. C_a[4]	stat. C_{0a}[4]				
	mm	mm		N	N		N	N	Nm	mm	mm	kg · cm²
2×KWVE20-B-S	85	82,1	F/FM	10 500	16 600	ZKLF1560-2RS-PE	17 900	28 000	32	20	5	0,846

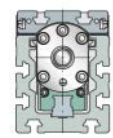

Compact actuators with monorail guidance system and ball screw drive

Compact actuators with ball screw drive

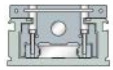

Compact actuator	Characteristics			
	Mounting cross-section width×height mm	Length of carriage unit L mm	Maximum support rail length L_2 mm	Load carrying capacity
MKUVS32-30-KGT	80×48	30	550 1 100	From all directions
MKUVS32-30-KGT-OA	80×48	30	1 100	From all directions
MKUVS32-80-KGT	80×48	80	550 1 100	From all directions
MKUVS32-80-KGT-OA	80×48	80	1 100	From all directions
MSDKUVE15-120-KGT	135×70	120	3 000	From all directions
MSDKUVE15-120-KGT-OA	135×70	120	3 000	From all directions
MSDKUVE15-80-KGT	135×70	80	3 000	From all directions
MSDKUVE15-80-KGT-OA	135×70	80	3 000	From all directions

1) Basic load ratings C and C_0 in the compressive direction of the actuator guidance systems.

2) Basic load ratings C and C_0 in accordance with DIN 69051. Due to the modified calculation algorithms in DIN 69051, the basic load ratings C_a and C_0 may differ in comparison with older data.

Guidance system	Basic load ratings of carriage guidance system[1)]		Ball screw drive		Basic load ratings of nut[2)]		Maximum travel velocity	Maximum acceleration	Repeat accuracy	Operating temperature	Mounting position
	dyn. C	stat. C_0	Nominal ∅	Pitch	C	C_0					
	N	N	mm	mm	N	N	m/s	m/s^2	mm	°C	
KUVS, preloaded clearance-free	5 700	10 600	10	2	2 133	5 300	0,1	20	±0,02	0 to +80	Horizontal and vertical
				4	2 370	5 200	0,2				
				10	2 607	5 900	0,5				
				20	1 659	4 000	1				
KUVS, preloaded clearance-free	5 700	10 600	–	–	–	–	–	20	–	0 to +80	Horizontal and vertical
KUVS, preloaded clearance-free	9 250	21 200	10	2	2 133	5 300	0,1	20	±0,02	0 to +80	Horizontal and vertical
				4	2 370	5 200	0,2				
				10	2 607	5 900	0,5				
				20	1 659	4 000	1				
KUVS, preloaded clearance-free	9 250	21 200	–	–	–	–	–	20	–	0 to +80	Horizontal and vertical
KUVE15-B-S, preloaded clearance-free	19 000	58 000	16	5	7 500	12 200	0,25	20	±0,02	0 to +80	Horizontal and vertical
				10	7 000	12 100	0,5				
				16	7 050	14 000	0,8				
				50	4 800	11 000	2,5				
KUVE15-B-S, preloaded clearance-free	19 000	58 000	–	–	–	–	–	20	–	0 to +80	Horizontal and vertical
KUVE15-B-S, preloaded clearance-free	12 930	33 200	16	5	7 500	12 200	0,25	20	±0,02	0 to +80	Horizontal and vertical
				10	7 000	12 100	0,5				
				16	7 050	14 000	0,8				
				50	4 800	11 000	2,5				
KUVE15-B-S, preloaded clearance-free	12 930	33 200	–	–	–	–	–	20	–	0 to +80	Horizontal and vertical

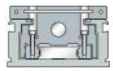

Basic design

Compact actuators
Ball screw drive

MKUVS32..-KGT, MKUVS32..-KGT-OA

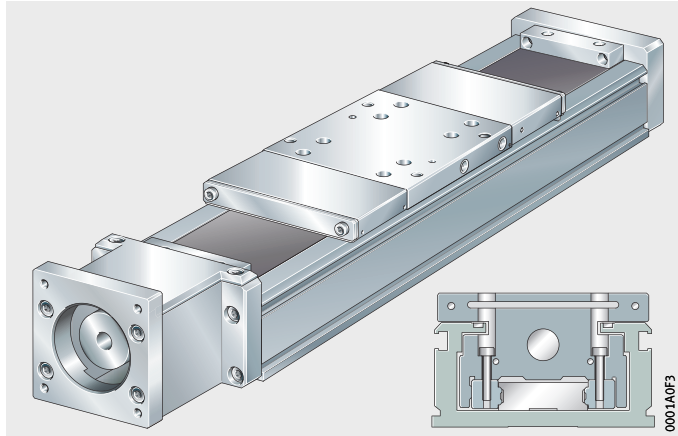

MSDKUVE15..-KGT, MSDKUVE15..-KGT-OA

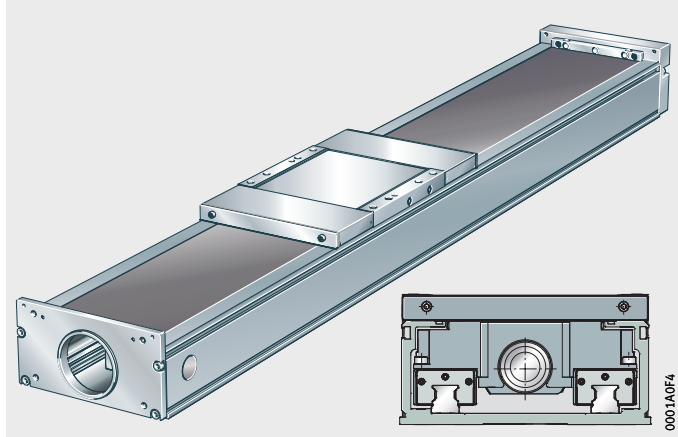

End position and zero point sensors

INI

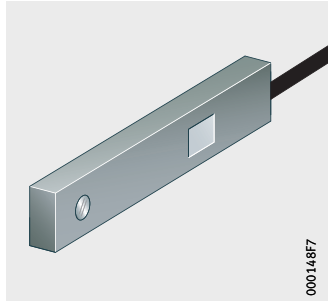

Coupling housing cover
Motor adapter plate

ADH

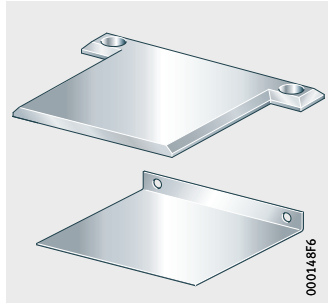

APL

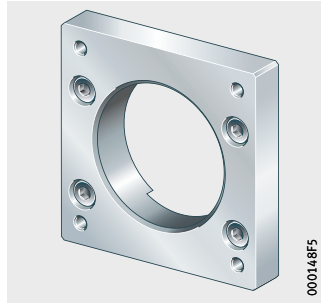

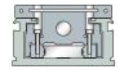

Couplings

KUP

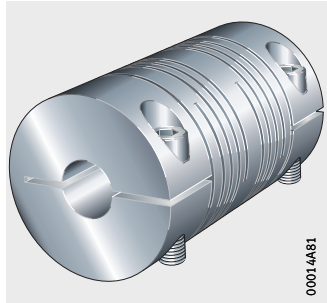

Fixing lug

SPPR

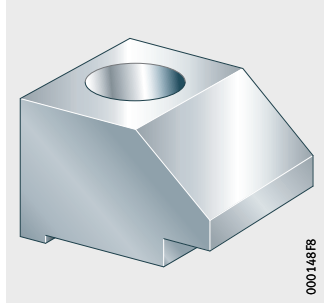

Features

The compact actuators MKUVS32..-KGT and MSDKUVE15..-KGT comprise:

- a carriage unit
- a support rail
- a recirculating ball guidance system
- one end plate
- one locating bearing unit
- a ball screw drive available with various pitch values.

The compact actuators MKUVS32..-KGT and MSDKUVE15..-KGT are designed for positioning, handling and machining tasks. These actuators have a guidance system that is wear-resistant and clearance-free. The drive elements are integrated in the support rail. The actuators are supplied in standard lengths. The configuration can be selected by the customer.

In the case of compact actuators MKUVS32..-KGT, the short carriage unit is guided by two linear recirculating ball bearing units KUVS, while the long carriage unit contains four linear recirculating ball bearing units KUVS.

In the case of compact actuators MSDKUVE15..-KGT, the carriage unit is guided by two linear recirculating ball bearing and guideway assemblies KUVE15-B-S arranged in parallel. Each carriage unit always has four carriages KWVE15-B-S, two per linear recirculating ball bearing and guideway assembly.

Accessories available for the actuators include fasteners and connectors, couplings and coupling housing covers, sensors and electric drive components such as motors, motor/gearbox units and controllers.

Designs

Compact actuators of series MKUVS32..-KGT and MSDKUVE15..-KGT are available in various designs, see table.

Available designs

Suffix	Description	Design
–	One carriage unit	Standard
ADA	Covering strip made from high-grade sheet steel	Standard
WN2	Second, non-driven carriage unit	Standard
OA	Without ball screw drive	Standard

Carriage plate

The carriage unit of a compact actuator comprises a carriage housing made from anodised profiled aluminium, the lubrication distributor and linear recirculating ball bearing units (MKUVS32..-KGT) or carriages (MSDKUVE15..-KGT), *Figure 1*, *Figure 2* and table, page 473.

End pieces are attached to the end faces of the carriage units with a covering strip (ADA). These give protection and guide the covering strip.

The carriage unit has an integrated magnet for Hall sensors.

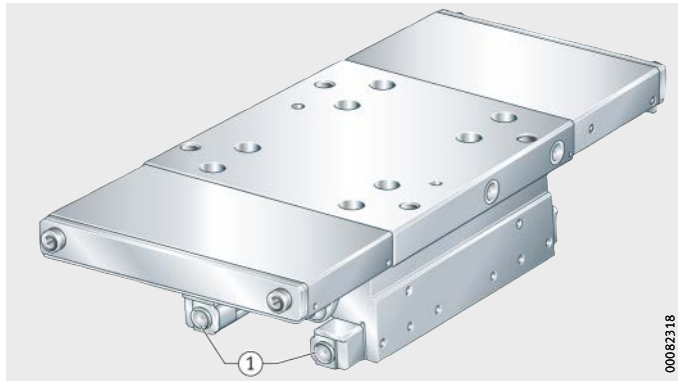

① Linear recirculating ball bearing unit KUVS32

Figure 1
Carriage unit of compact actuator MKUVS32..-KGT

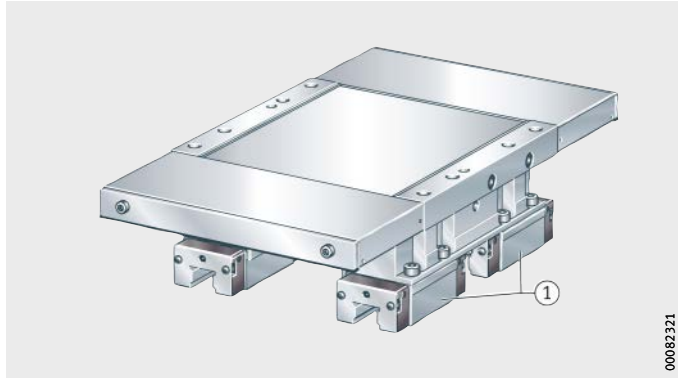

① Carriage KWVE15

Figure 2
Carriage unit of compact actuators MSDKUVE15..-KGT

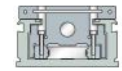

Lengths of carriage units

Series	Carriage unit length mm	Suffix
MKUVS32-30-KGT	30	30
MKUVS32-80-KGT	80	80
MSDKUVE15-120-KGT	120	120
MSDKUVE15-80-KGT	80	80

Lubrication

The linear guidance system and the spindle nut can be relubricated via two lubrication nipples on each of the longitudinal faces.

Sealing

The linear recirculating ball bearing units and carriages are sealed on all sides by wipers on the end faces and longitudinal faces, which form a gap seal in conjunction with the guideway.

In order to protect the linear guidance system and drive spindle against contamination, the compact actuators can be supplied with a covering strip made from high-grade steel (suffix ADA).
In this design, the carriage units have a covering strip guide on both end faces. The strip is guided by the carriage unit during travel.
The stroke length is shorter in the case of actuators with a covering strip.

Location

The carriage unit has threaded holes for fixing to the adjacent construction.

Support rail

The support rail unit is a composite unit comprising a carrier profile made from anodised aluminium and the guideway for linear recirculating ball bearing units (MKUVS32..-KGT) or for carriages (MSDKUVE15..-KGT), *Figure 3* and *Figure 4*. Integral slots allow simple mounting of end position and zero point sensors.

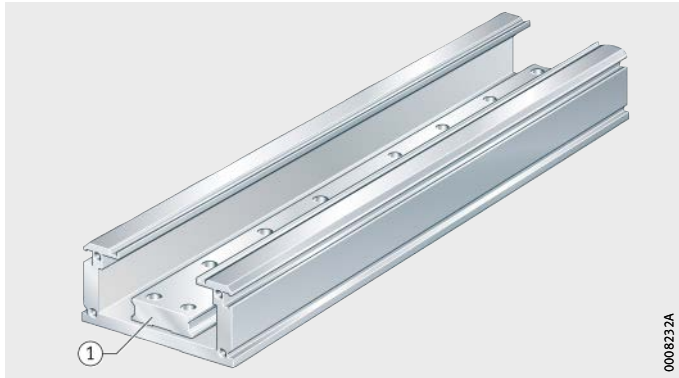

① Guideway TKVD32

Figure 3
Support rail of compact actuator MKUVS32..-KGT

① Guideway TKVD15

Figure 4
Support rail of compact actuator MSDKUVE15..-KGT

Support rail length and segments

The maximum length of the support rails is 550 mm or 1 100 mm for MKUVS32..-KGT and 3 000 mm for MSDKUVE15..-KGT .

Ball screw drive

The spindle has a rolled thread with pitch values between 2 and 50 mm, see table.

Ball screw drive variants

Series of compact actuator	Pitch P	Suffix
MKUVS32-30-KGT MKUVS32-80-KGT	2 mm	KGT/2
	4 mm	KGT/4
	10 mm	KGT/10
	20 mm	KGT/20
	Without drive (no spindle)	OA
MSDKUVE15-120-KGT MSDKUVE15-80-KGT	5 mm	KGT/5
	10 mm	KGT/10
	16 mm	KGT/16
	50 mm	KGT/50
	Without drive (no spindle)	OA

Permissible spindle speed

For data on the maximum spindle speed, see pages starting page 496.

End position and zero point sensor

End position and zero point sensors are available for the compact actuators, see table, page 476. Typical end position sensors are designed as openers, typical zero point sensors as closers, *Figure 5* and connection diagram, *Figure 6*.

The sensors fit flush in the lateral slot of the carrier profile, *Figure 7*, page 476. The sensors can be arranged at any point in the slot. They are fixed in place using a clamping screw.

The sensors contain Hall effect elements that detect a magnet integrated in the side of the driven carriage. For ease of mounting, the sensors are supplied with a 300 mm long cable and an M8 3 pin industry standard connector. In addition, a matching 5 m cable is available with a plug at one end and bare cable ends at the other, see table.

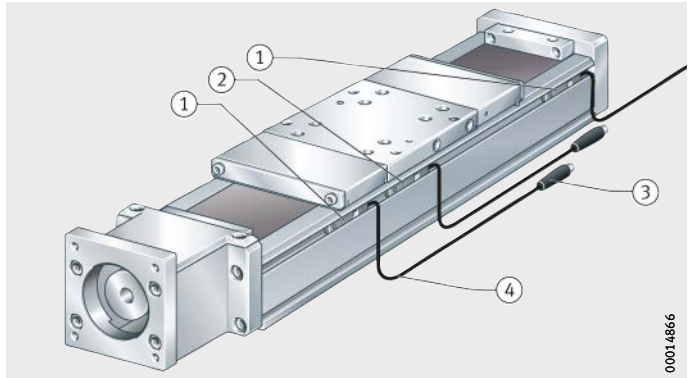

① End position sensor
② Zero point sensor
③ M8 3 pin plug
④ Connection cable

Figure 5
End position and zero point sensors

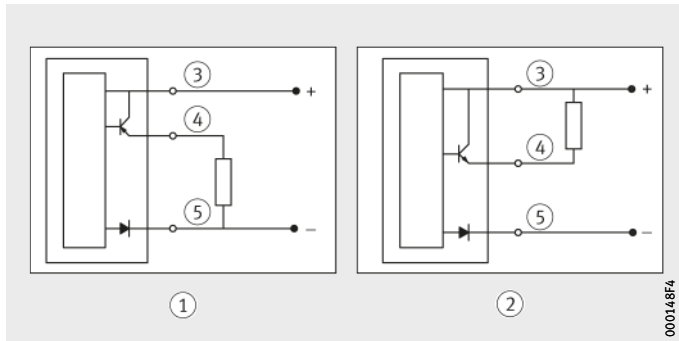

① PNP logic
② NPN logic
③ BRN
④ BLK
⑤ BLU

Figure 6
Connection diagram

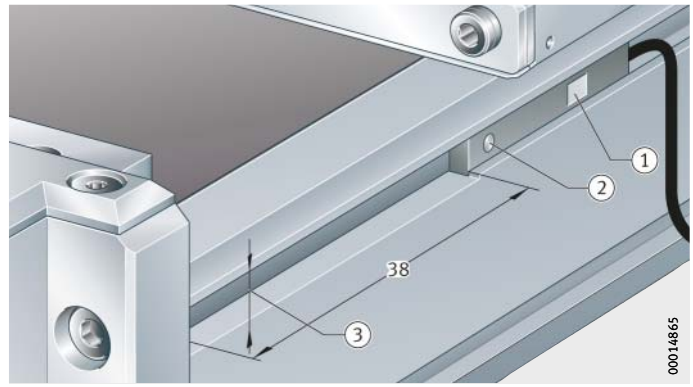

① LED
② Fixing screw
③ Widened slot for sensor mounting, on drive side only

Figure 7
Location of sensors

Sensors

Designation	Logic	Design	Voltage	Switching current max.
INI-CS-50NNC-QD	NPN logic	Closer	10–30 V DC	100 mA
INI-CS-40TN-QD	NPN logic	Opener	10–30 V DC	100 mA
INI-CS-50PNC-QD	PNP logic	Closer	10–30 V DC	100 mA
INI-CS-40TP-QD	PNP logic	Opener	10–30 V DC	100 mA

Connection cable

Designation	Description
NI-M83R-PUR-5M	Connection cable for sensors INI-CS-..-QD Length 5 m

Coupling housing cover

The openings above and below the coupling housing can be closed off using a cover, *Figure 8*. The cover and mounting material are available as a set, designation ADH.MKUVS32-KGT-0400.

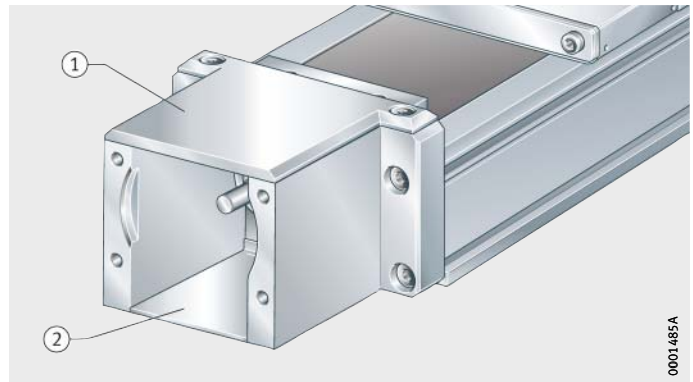

① Upper coupling housing cover
② Lower coupling housing cover

Figure 8
Coupling housing cover

Motor adapter plates

Adapter plates are available for mounting of a motor on the compact actuators, see dimension table. Other adapter plates are available by agreement.

Couplings

Spring plate couplings or elastomer couplings are available for the compact actuators, *Figure 9* and dimension tables.
The couplings are clamped to the drive shaft and motor shaft and transmit torque.

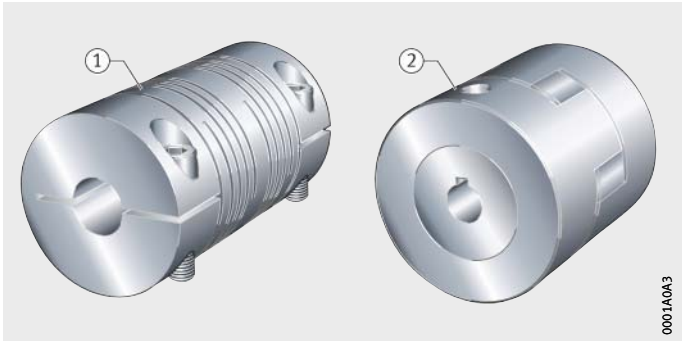

① Worm coupling KUP-H
② Cross coupling KUP-S

Figure 9
Couplings

Clamping lugs

Clamping lugs are required for location of the support rail of compact actuators on the adjacent construction, *Figure 10*.
The clamping lugs SPPR12×20 are made from anodised aluminium.

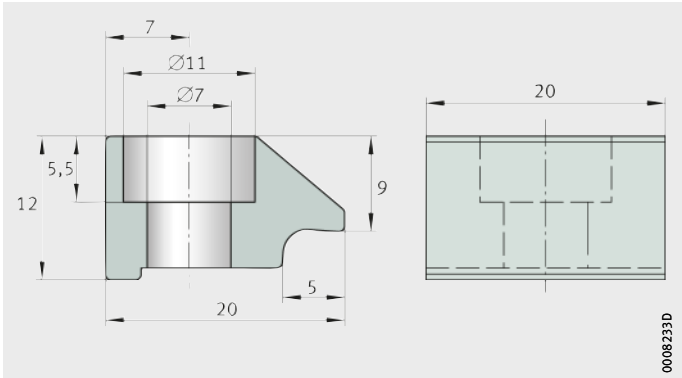

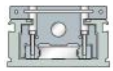

Figure 10
Dimensions of clamping lug

Drive elements

For the actuators, Schaeffler also offers components such as couplings, coupling housings and planetary gearboxes as well as servo motors and servo controllers, see page 681 and page 846.

The bearing load in the actuators must be checked; it is not taken into consideration in dimensioning of the motor.
For vertical mounting, motors with a holding brake must be used.

If different loading and kinematic criteria apply, the least favourable operating conditions should be used for calculation of the drive motor and design of the gearbox, coupling and servo controller.

Design and safety guidelines

Load carrying capacity and load safety factor

The load carrying capacities and load safety factors to be observed differ as a function of the mounting position.

Deflection

Compact actuators are screw mounted to the adjacent construction using clamping lugs or by means of threaded holes. Deflection is therefore essentially determined by the strength and rigidity of the adjacent construction and the connectors. As the rigidity of these components increases, the deflection of the actuators is reduced.

Diagrams

The diagram values are determined for a bearing arrangement or clamping which is in theory infinitely rigid and are subdivided into locating/non-locating and locating/locating bearing arrangements, starting *Figure 11*, page 480.

The deflection of the support rail is valid for introduction of the load at the centre of the carriage unit if this is at the centre point between the bearing points.

The diagrams represent guide values only for the deflection of the support rail, starting *Figure 15*, page 481. The effect of deflection on the rating life of the guidance system is not taken into consideration.

It is not possible to provide deflection diagrams for actuators with two carriage units since there will be different spacings between the carriage units. In such cases, please contact us.

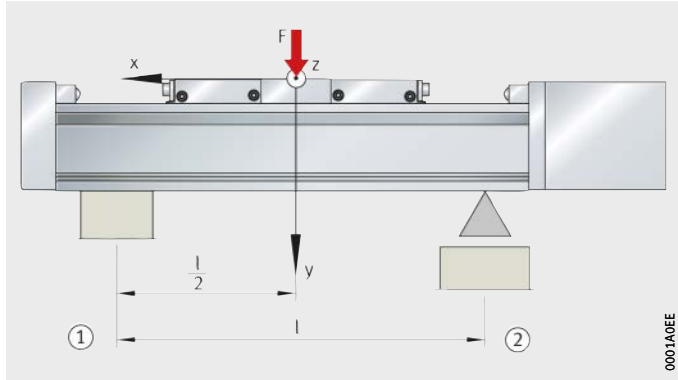

① Locating bearing arrangement
② Non-locating bearing arrangement

Figure 11
Deflection about the z axis

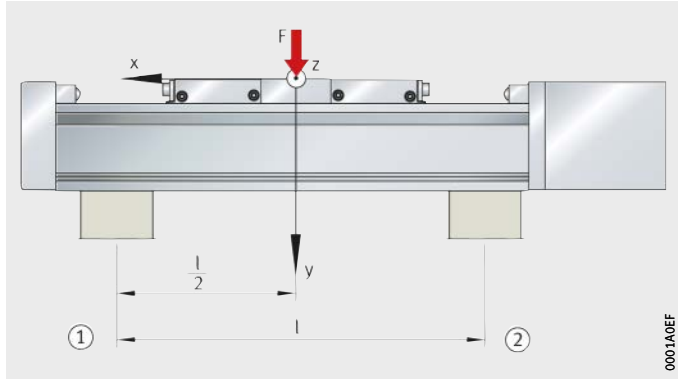

① Locating bearing arrangement
② Locating bearing arrangement

Figure 12
Deflection about the z axis

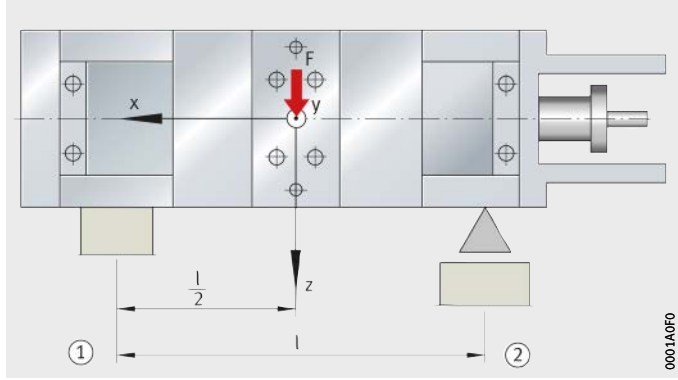

① Locating bearing arrangement
② Non-locating bearing arrangement

Figure 13
Deflection about the y axis

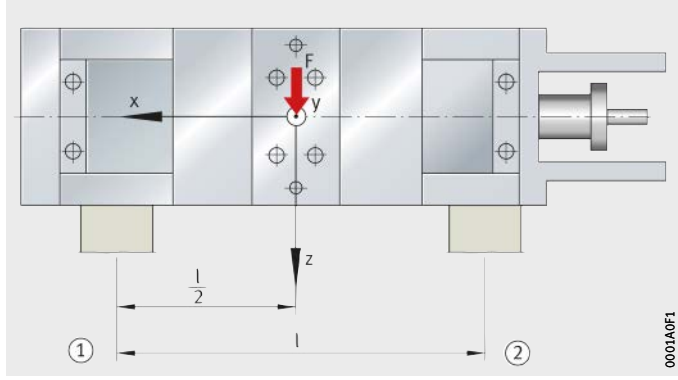

① Locating bearing arrangement
② Locating bearing arrangement

Figure 14
Deflection about the y axis

MKUVS32-30-KGT
MKUVS32-80-KGT

Locating/non-locating bearing arrangement
Δ_{vy} = deflection
l = support spacing

Figure 15
Deflection about the z axis

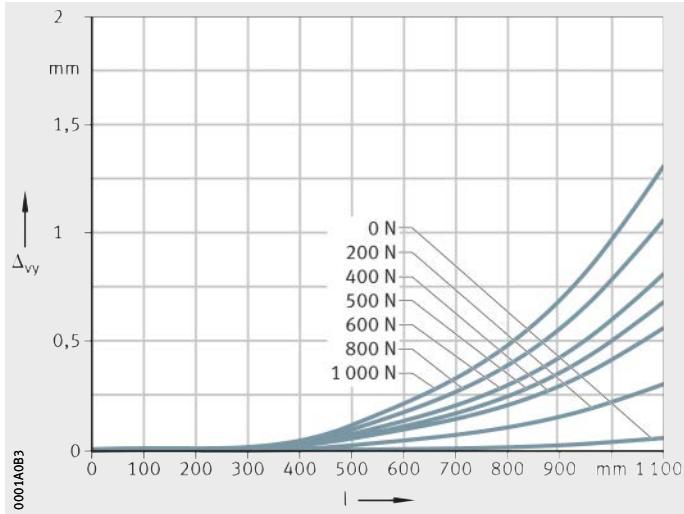

MKUVS32-30-KGT
MKUVS32-80-KGT

Locating/locating bearing arrangement
Δ_{vy} = deflection
l = support spacing

Figure 16
Deflection about the z axis

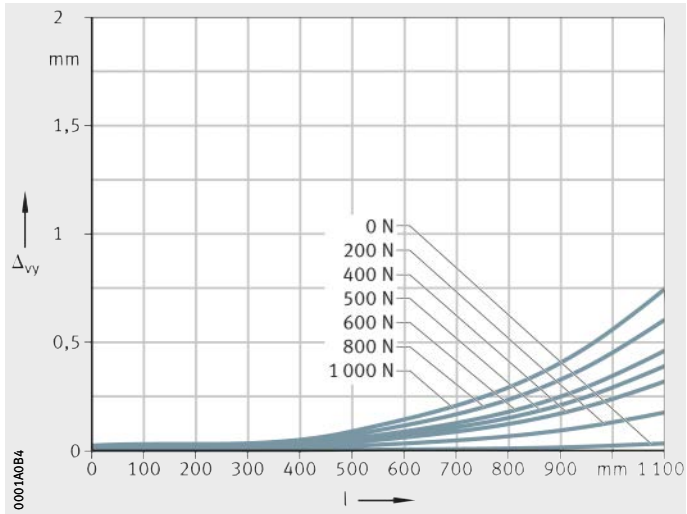

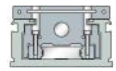

MKUVS32-30-KGT
MKUVS32-80-KGT

Locating/non-locating bearing arrangement
Δ_{vz} = deflection
l = support spacing

Figure 17
Deflection about the y axis

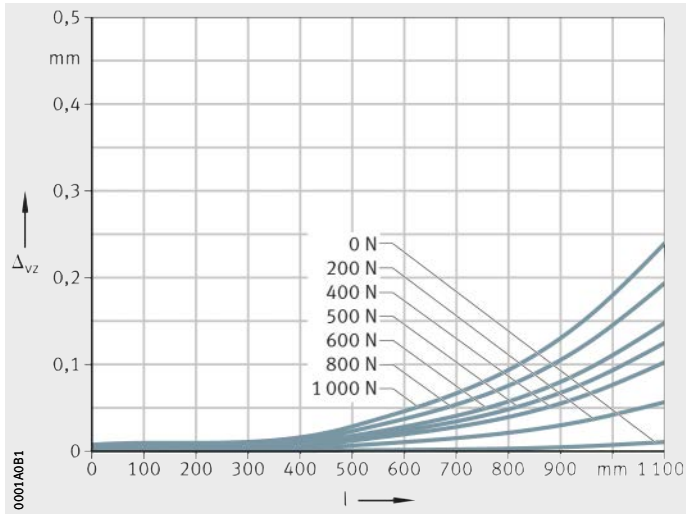

MKUVS32-30-KGT
MKUVS32-80-KGT

Locating/locating bearing arrangement
Δ_{vz} = deflection
l = support spacing

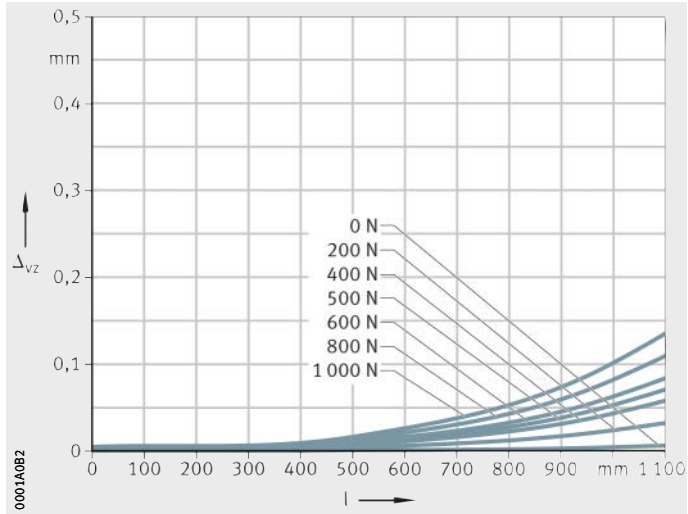

Figure 18
Deflection about the y axis

MSDKUVE15-120-KGT
MSDKUVE15-80-KGT

Locating/non-locating bearing arrangement
Δ_{vy} = deflection
l = support spacing

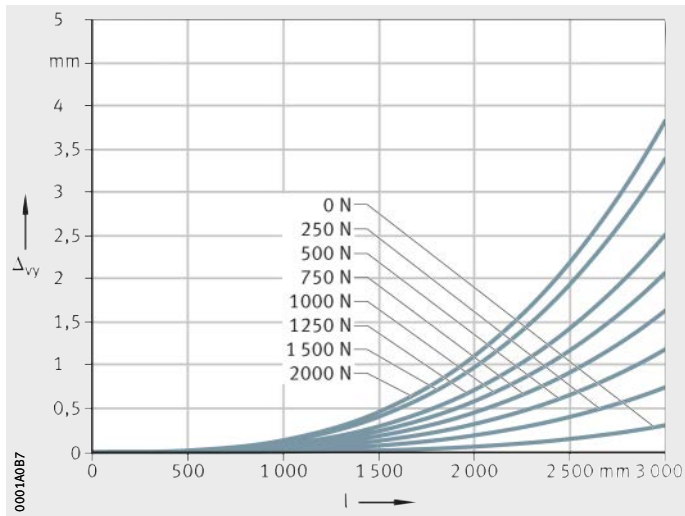

Figure 19
Deflection about the z axis

MSDKUVE15-120-KGT
MSDKUVE15-80-KGT

Locating/locating bearing arrangement
Δ_{vy} = deflection
l = support spacing

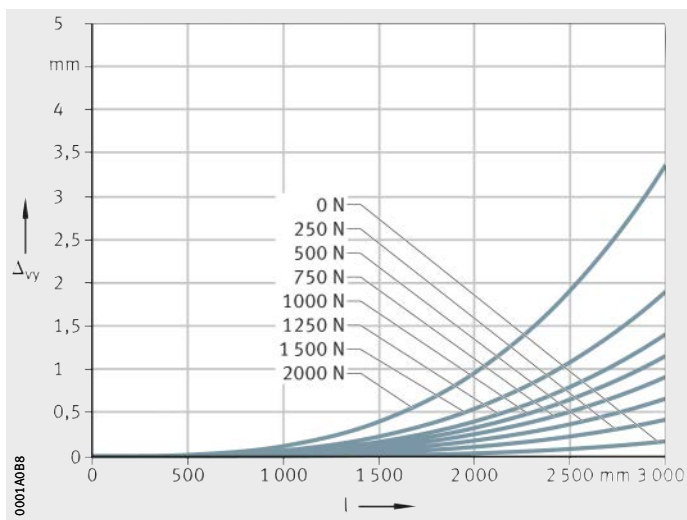

Figure 20
Deflection about the z axis

MSDKUVE15-120-KGT
MSDKUVE15-80-KGT

Locating/non-locating bearing arrangement
Δ_{vz} = deflection
l = support spacing

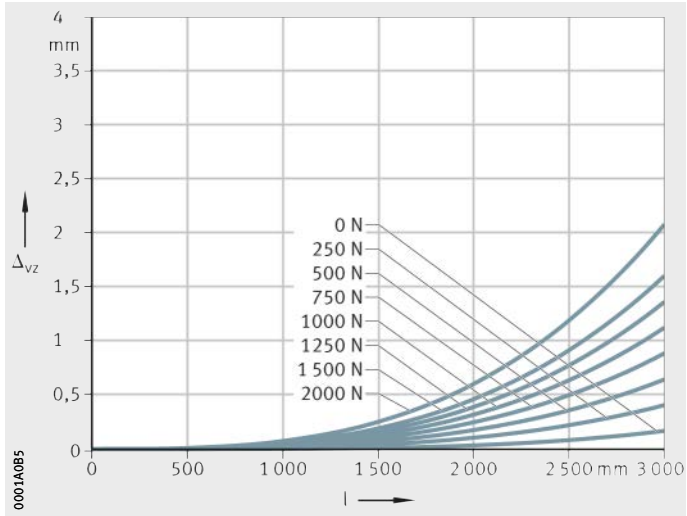

Figure 21
Deflection about the y axis

MSDKUVE15-120-KGT
MSDKUVE15-80-KGT

Locating/locating bearing arrangement
Δ_{vz} = deflection
l = support spacing

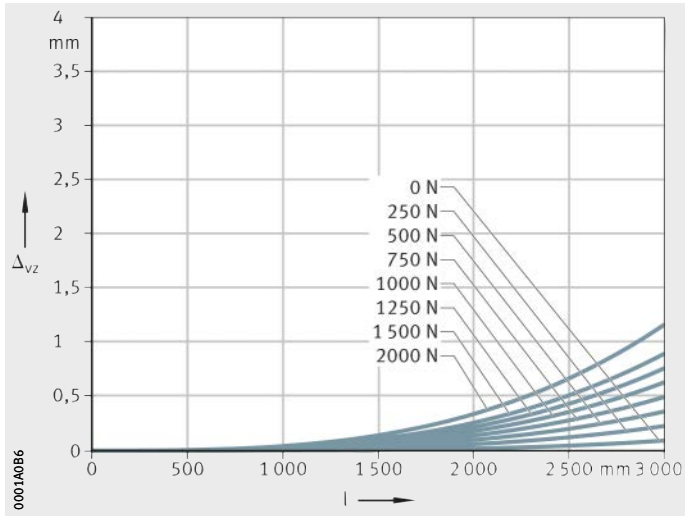

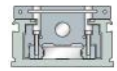

Figure 22
Deflection about the y axis

Idling drive torque

The idling drive torque M_0 of compact actuators with spindle drive is calculated as a function of the spindle speed and the horizontal (M_{0h}) or vertical (M_{0v}) mounting position. The idling drive torque increases with increasing travel velocity.

MKUVS32-30-KGT
MKUVS32-80-KGT

n = spindle speed
M_{0h} = idling drive torque

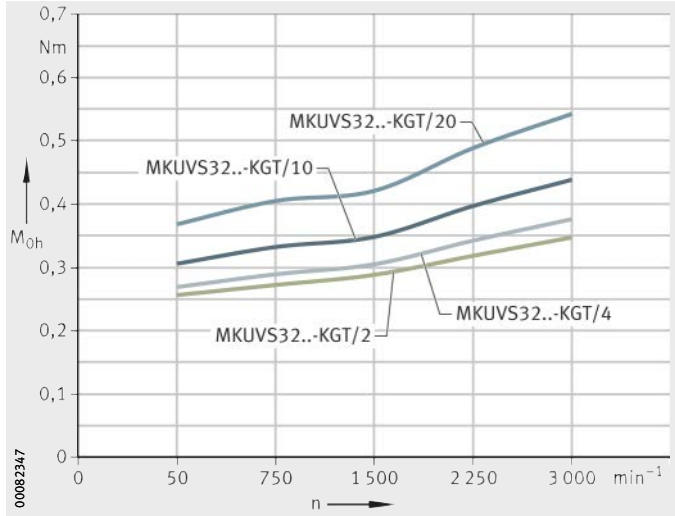

Figure 23
Idling drive torque
Horizontal mounting position

MKUVS32-30-KGT
MKUVS32-80-KGT

n = spindle speed
M_{0v} = idling drive torque

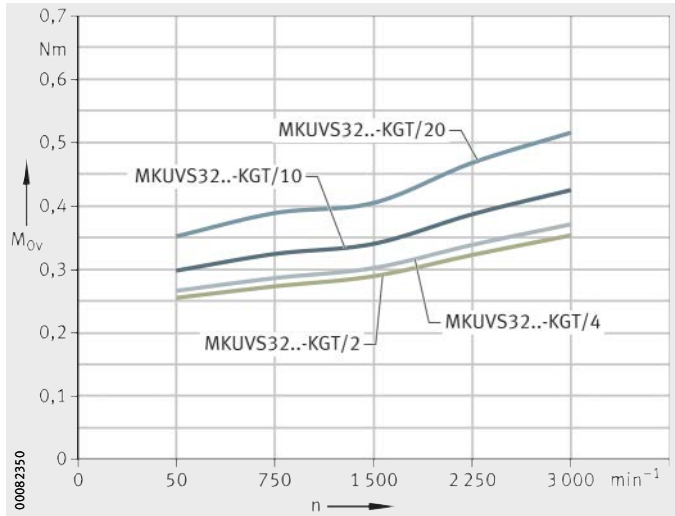

Figure 24
Idling drive torque
Vertical mounting position

MSDKUVE15-120-KGT
MSDKUVE15-80-KGT

n = spindle speed
M_{0h} = idling drive torque

Figure 25
Idling drive torque
Horizontal mounting position

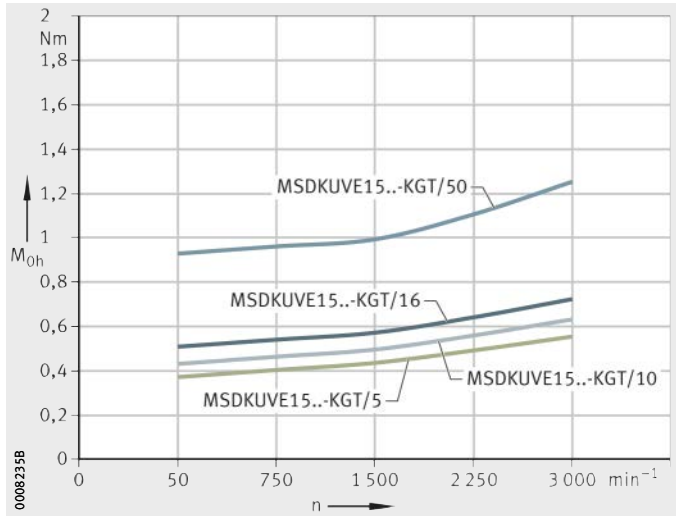

MSDKUVE15-120-KGT
MSDKUVE15-80-KGT

n = spindle speed
M_{0v} = idling drive torque

Figure 26
Idling drive torque
Vertical mounting position

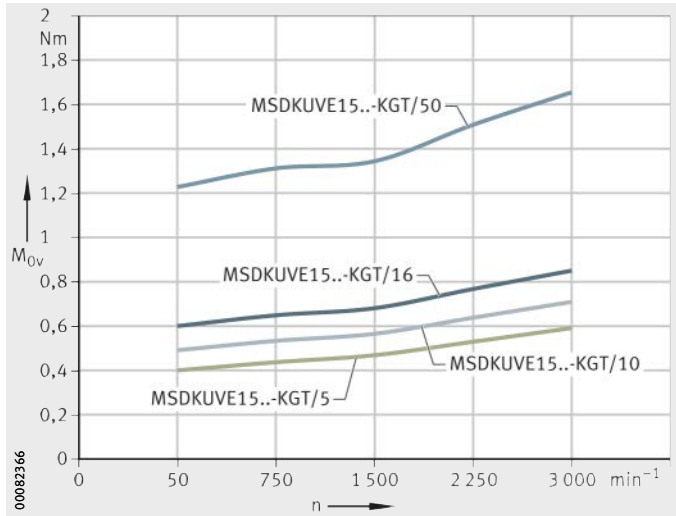

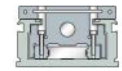

MSDKUVE15-120-KGT..-WN2
MSDKUVE15-80-KGT..-WN2

n = spindle speed
M_{0h} = idling drive torque

Figure 27
Idling drive torque
Horizontal mounting position
with two carriages

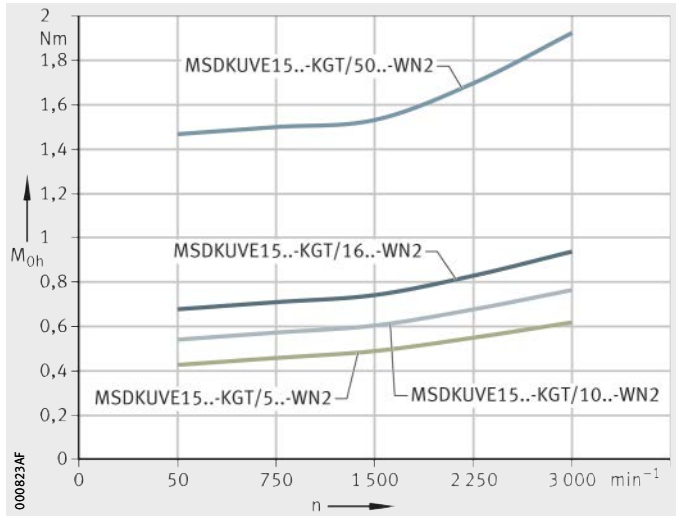

Length calculation of compact actuators

Compact actuators MKUVS32 are available with support rails in lengths of 150 mm to 1 100 mm, while compact actuators MSDKUVE are available with support rails in lengths of 250 mm to 3 000 mm. As standard, support rails are available in lengths graduated to 50 mm. Other lengths are special designs, please contact us in such cases.

The length calculation of compact actuators is based on the required effective stroke length N_H. The effective stroke length N_H must be increased by the addition of safety spacing values on both sides of the travel distance.

The total length L_{tot} of the actuator is determined from the support rail length L_2 and the lengths of the end plates L_4 and L_5.
If two carriage units are present, both carriage unit lengths L and the spacing L_{x1} must be taken into consideration.

Parameters for length calculation

G_H mm
Total stroke length

N_H mm
Effective stroke length

S mm
Safety spacing, for minimum values see tables, page 489

L mm
Length of carriage plate

L_2 mm
Length of support rail

L_3, L_1 mm
Total length of carriage unit

L_4 mm
Length of end plate

L_5 mm
Length of end plate

L_6 mm
Length of end stops

L_{tot} mm
Total length of actuator

L_{x1} mm
Spacing between two carriage units.

Total stroke length

The total stroke length G_H is determined from the required effective stroke length and the safety spacings, which must correspond to at least twice the spindle pitch P.

$$G_H = N_H + 2 \cdot S$$

Support rail

Compact actuators with monorail guidance system and ball screw drive are only available with a single-piece support rail.
The maximum length of a support rail is 1 100 mm for MKUVS32 and 3 000 mm for MSDKUVE15. In the case of actuators MKUVS32-KGT/2 and MKUVS32-KGT/4, the maximum length of the support rail is 550 mm.

Spacing L_{x1} between carriage units

The minimum spacing L_{x1} between two carriage units is 10 mm.

Total length L_{tot} and support rail length L_2

The following equations are designed for one and two carriage units. The parameters and their position can be found in *Figure 28* and the table, page 489. If more than two carriage units are present, please consult us.

MKUVS32

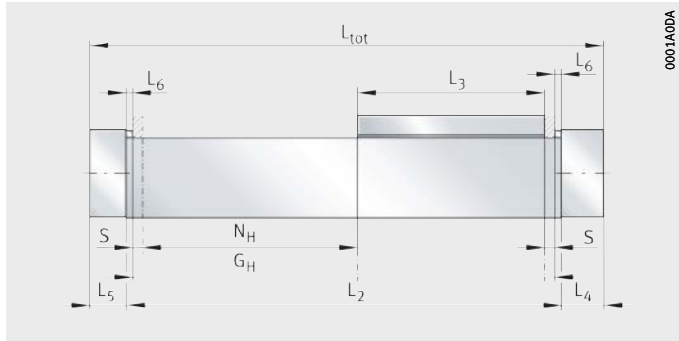

Figure 28
Length parameters for one carriage unit

MSDKUVE15

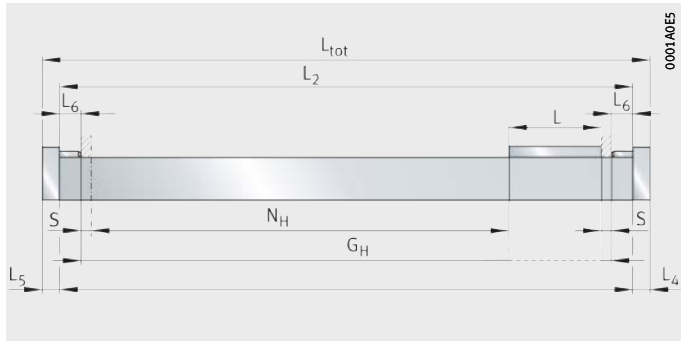

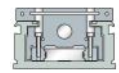

Figure 29
Length parameters for one carriage unit

MSDKUVE15..-ADA

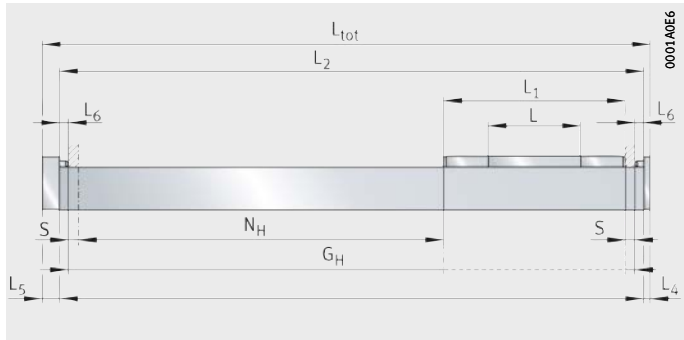

Figure 30
Length parameters for one carriage unit

One carriage unit MKUVS32

$$L_2 = G_H + L_3 + 2 \cdot L_6$$

One carriage unit MSDKUVE15

$$L_2 = G_H + L + 2 \cdot L_6$$

One carriage unit MSDKUVE15..-ADA

$$L_2 = G_H + L_1 + 2 \cdot L_6$$

Total length

$$L_{tot} = L_2 + L_4 + L_5$$

MKUVS32..-WN2

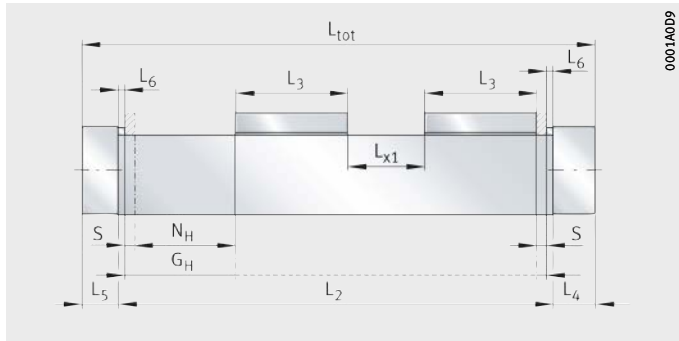

Figure 31
Length parameters
for two carriage units

MSDKUVE15..-WN2

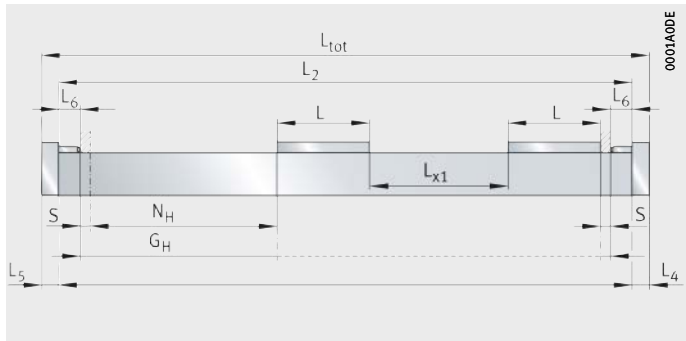

Figure 32
Length parameters
for two carriage units

MSDKUVE15..-WN2-ADA

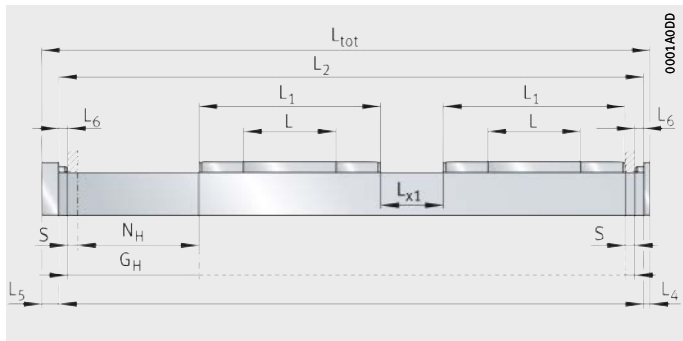

Figure 33
Length parameters
for two carriage units

Two carriage units
MKUVS32..-WN2

$$L_2 = G_H + 2 \cdot L_3 + L_{x1} + 2 \cdot L_6$$

Two carriage units
MSDKUVE15..-WN2

$$L_2 = G_H + 2 \cdot L + L_{x1} + 2 \cdot L_6$$

Two carriage units
MSDKUVE15..-WN2-ADA

$$L_2 = G_H + 2 \cdot L_1 + L_{x1} + 2 \cdot L_6$$

Total length

$$L_{tot} = L_2 + L_4 + L_5$$

Length parameters
MKUVS32

Designation	L mm	L_1 mm	L_4 mm	L_5 mm	L_6 mm	S mm
MKUVS32-30-KGT/2	30	61	59	15	10,5	2
MKUVS32-30-KGT/4	30	61	59	15	10,5	4
MKUVS32-30-KGT/10	30	61	59	15	10,5	10
MKUVS32-30-KGT/20	30	61	59	15	10,5	20
MKUVS32-30-KGT-OA	30	61	15	15	10,5	1)
MKUVS32-80-KGT/2	80	111	59	15	10,5	2
MKUVS32-80-KGT/4	80	111	59	15	10,5	4
MKUVS32-80-KGT/10	80	111	59	15	10,5	10
MKUVS32-80-KGT/20	80	111	59	15	10,5	20
MKUVS32-80-KGT-OA	80	111	15	15	10,5	1)
MKUVS32-30-KGT/2-ADA	30	117	59	15	10,5	2
MKUVS32-30-KGT/4-ADA	30	117	59	15	10,5	4
MKUVS32-30-KGT/10-ADA	30	117	59	15	10,5	10
MKUVS32-30-KGT/20-ADA	30	117	59	15	10,5	20
MKUVS32-30-KGT-OA-ADA	30	117	15	15	10,5	1)
MKUVS32-80-KGT/2-ADA	80	167	59	15	10,5	2
MKUVS32-80-KGT/4-ADA	80	167	59	15	10,5	4
MKUVS32-80-KGT/10-ADA	80	167	59	15	10,5	10
MKUVS32-80-KGT/20-ADA	80	167	59	15	10,5	20
MKUVS32-80-KGT-OA-ADA	80	167	15	15	10,5	1)

1) Depending on application.

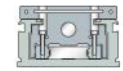

Length parameters
MSDKUVE15

Designation	L mm	L_1 mm	L_4 mm	L_5 mm	L_6 mm	S mm
MSDKUVE15-120-KGT/5	120	–	8,5	22,5	27,9	5
MSDKUVE15-120-KGT/10	120	–	8,5	22,5	27,9	10
MSDKUVE15-120-KGT/16	120	–	8,5	22,5	27,9	16
MSDKUVE15-120-KGT/50	120	–	8,5	22,5	27,9	50
MSDKUVE15-120-KGT-OA	120	–	22,5	22,5	27,9	1)
MSDKUVE15-80-KGT/5	80	–	8,5	22,5	27,9	5
MSDKUVE15-80-KGT/10	80	–	8,5	22,5	27,9	10
MSDKUVE15-80-KGT/16	80	–	8,5	22,5	27,9	16
MSDKUVE15-80-KGT/50	80	–	8,5	22,5	27,9	50
MSDKUVE15-80-KGT-OA	80	–	22,5	22,5	27,9	1)
MSDKUVE15-120-KGT/5-ADA	120	241	8,5	22,5	11,5	5
MSDKUVE15-120-KGT/10-ADA	120	241	8,5	22,5	11,5	10
MSDKUVE15-120-KGT/16-ADA	120	241	8,5	22,5	11,5	16
MSDKUVE15-120-KGT/50-ADA	120	241	8,5	22,5	11,5	50
MSDKUVE15-120-KGT-OA-ADA	120	241	22,5	22,5	11,5	1)
MSDKUVE15-80-KGT/5-ADA	80	201	8,5	22,5	11,5	5
MSDKUVE15-80-KGT/10-ADA	80	201	8,5	22,5	11,5	10
MSDKUVE15-80-KGT/16-ADA	80	201	8,5	22,5	11,5	16
MSDKUVE15-80-KGT/50-ADA	80	201	8,5	22,5	11,5	50
MSDKUVE15-80-KGT-OA-ADA	80	201	22,5	22,5	11,5	1)

1) Depending on application.

Mass of compact actuators

The total mass of a compact actuator is calculated from the mass of the actuator without a carriage unit, the carriage unit and the special design: second carriage unit (W2), *Figure 34*. Insert the values from the table in the following equation. The values m_{LAW} and m_{BOL} are mandatory.

$$m_{tot} = m_{Law} + m_{Bol} + m_3$$

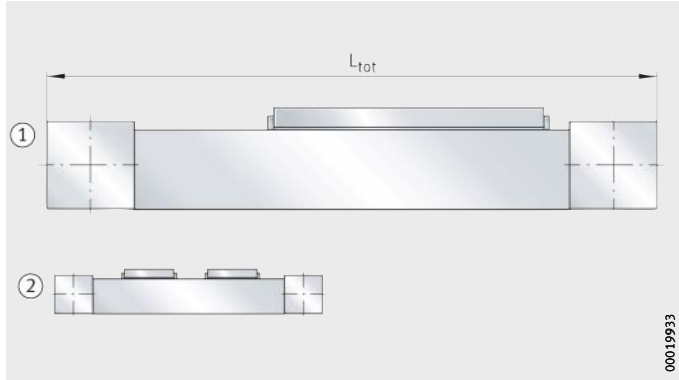

① Basic design
② Second carriage unit (WN2)

Figure 34
Basic and additional designs

Values for mass calculation

Designation	Mass		
	Carriage unit m_{LAW} ~kg	Actuator without carriage unit m_{BOL} ~kg	Design m_3 WN2 ~kg
MKUVS32-30-KGT	0,3	$(L_{tot} \cdot 0{,}0055) + 0{,}37$	0,21
MKUVS32-30-KGT-OA	0,21	$(L_{tot} \cdot 0{,}0049) + 0{,}37$	
MKUVS32-80-KGT	0,58	$(L_{tot} \cdot 0{,}0055) + 0{,}37$	0,49
MKUVS32-80-KGT-OA	0,49	$(L_{tot} \cdot 0{,}0049) + 0{,}37$	
MKUVS32-30-KGT..-ADA	0,35	$(L_{tot} \cdot 0{,}0056) + 0{,}37$	0,26
MKUVS32-30-KGT-OA-ADA	0,26	$(L_{tot} \cdot 0{,}0050) + 0{,}37$	
MKUVS32-80-KGT..-ADA	0,62	$(L_{tot} \cdot 0{,}0056) + 0{,}37$	0,53
MKUVS32-80-KGT-OA-ADA	0,53	$(L_{tot} \cdot 0{,}0050) + 0{,}37$	
MSDKUVE15-120-KGT	2,3	$(L_{tot} \cdot 0{,}0080) + 0{,}37$	2,1
MSDKUVE15-120-KGT-OA	2,1	$(L_{tot} \cdot 0{,}0068) + 0{,}37$	
MSDKUVE15-80-KGT	1,6	$(L_{tot} \cdot 0{,}0080) + 0{,}37$	1,4
MSDKUVE15-80-KGT-OA	1,4	$(L_{tot} \cdot 0{,}0068) + 0{,}37$	
MSDKUVE15-120-KGT..-ADA	2,9	$(L_{tot} \cdot 0{,}0081) + 0{,}37$	2,7
MSDKUVE15-120-KGT-OA-ADA	2,7	$(L_{tot} \cdot 0{,}0069) + 0{,}37$	
MSDKUVE15-80-KGT..-ADA	2,2	$(L_{tot} \cdot 0{,}0081) + 0{,}37$	2,0
MSDKUVE15-80-KGT-OA-ADA	2,0	$(L_{tot} \cdot 0{,}0069) + 0{,}37$	

Location of the support rail

Location using clamping lugs

Clamping lugs are suitable for location of the compact actuator on the adjacent construction. If the actuator is fully supported, clamping lugs must be arranged at both ends of the support rail and then on both sides at intervals of no more than 300 mm, *Figure 35* and table.

For heavy load conditions, the quantity of clamping lugs must be increased.

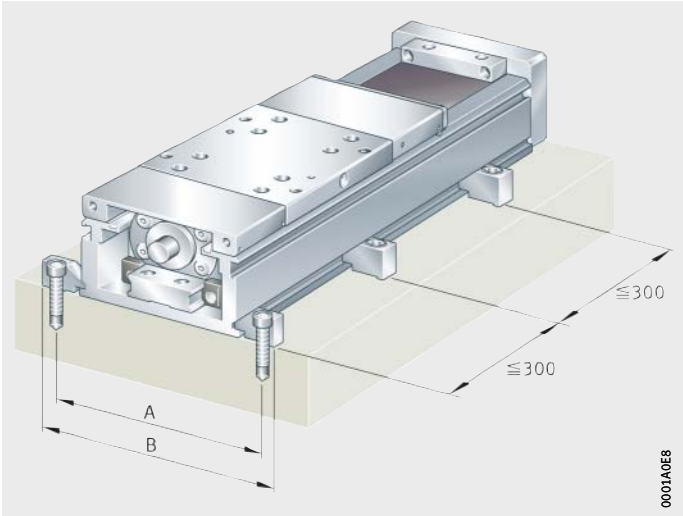

A = hole spacing
B = total width

Figure 35
Location using clamping lugs

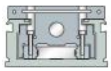

Widths with clamping lugs

Designation	A mm	B mm
MKUVS32	100	114
MSDKUVE15	155	169

Location using screws

Threaded holes are provided on the underside of the carrier profile for location of the compact actuator on the adjacent construction, *Figure 36* and table. The end spacings a_L and a_R are dependent on the number of threaded holes and the support rail length.
The end spacings are at least 15 mm and a maximum of 35 mm.
The lengths can be calculated, see equations.

① Threaded hole M4

L_2 = support rail length
j_{L8}, j_{B8} = pitch
a_R, a_L = end spacings

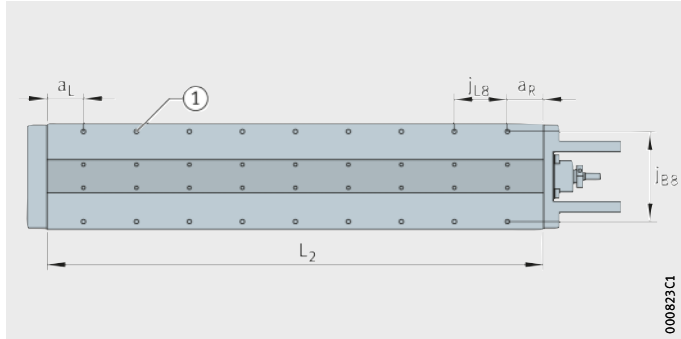

Figure 36
Threaded holes on the underside of the carrier profile

Spacings of threaded holes

Designation	j_{L8} mm	j_{B8} mm	$a_{L\,min}$, $a_{R\,min}$ mm	$a_{L\,max}$, $a_{R\,max}$ mm	① Thread
MKUVS32	40	68	15	35	M4×12
MSDKUVE15	100	112	20	40	M6×8,5

The number of hole pitches is the rounded whole number equivalent to:

$$n = \frac{L_2 - 2 \cdot a_{R\,min}}{j_{L8}}$$

The end spacings a_R and a_L are calculated according to:

$$a_R, a_L = 0{,}5 \cdot \left(L_2 - n \cdot j_{L8}\right)$$

n –
Number of hole pitches.
L_2 mm
Support rail length
a_R, a_L mm
End spacing on right and left
j_{L8}, j_{B8} mm
Hole spacing.

Lubrication

The guidance systems and ball screw drive in compact actuators are initially greased with a high quality lithium complex soap grease KP2P–35 according to DIN 51 825 and must be relubricated during operation.

The recirculating ball guidance systems in the compact actuators are sealed, have an initial greasing and can be relubricated.
The bearings fitted are sealed and lubricated for life.

Structure of suitable greases

Greases suitable for the recirculating ball guidance systems have the following composition:

- lithium soap or lithium complex soap grease with base oil having a mineral oil base
- special anti-wear additives for loads $C/P < 8$, indicated by “P” in the DIN designation
- base oil viscosity ISO VG 68 to ISO VG 100
- consistency in accordance with NLGI grade 2.

If different greases are used, their miscibility and compatibility must be checked first.

Relubrication intervals

The relubrication intervals are essentially dependent on the following factors:

- the travel velocity of the carriage unit
- the load
- the operating temperature
- the stroke length
- the environmental conditions and environmental influences
- the mounting position.

The cleaner the environment, the lower the lubricant consumption.

Calculation of the relubrication interval

Since it is not possible to calculate all the influencing factors, the time at which relubrication must be carried out and the quantity of lubricant which must be used can only be precisely determined under actual operating conditions. If no precise data are available, the value for the relubrication quantity can be taken from the table, page 495.

An approximation equation can be used, however, to determine a guide value for the relubrication interval for many applications, for details on determining the grease operating life see table, page 495.

For the ball screw drive, a relubrication interval of 200 h to 300 h is sufficient under normal operating conditions.

Relubrication must be carried out, irrespective of the result of this calculation, no more than 1 year after the last lubrication.

Fretting corrosion is a consequence of lubricant starvation and is visible as a reddish discolouration of the rolling element raceways. Lubricant starvation can lead to permanent damage to the system and therefore to its failure. It must be ensured that the lubrication intervals are reduced accordingly in order to prevent fretting corrosion.

When calculating the relubrication interval, the grease operating life must also be checked. This is restricted to a maximum of 3 years due to the ageing resistance of the grease. It is the user's responsibility to consult the lubricant manufacturer.

In order to ensure that a significant oil reserve is formed for dispensing oil to the raceways, all lubrication points on a carriage unit must always be used.

Relubrication quantities

Relubrication should be carried out wherever possible with several partial quantities at various times instead of the complete quantity at the time of the relubrication interval, *Figure 37* and table, page 495.

MKUVS32
MSDKUVE15

① and ② Lubrication points for linear recirculating ball bearing units

③ or ④ Lubrication point for spindle nut

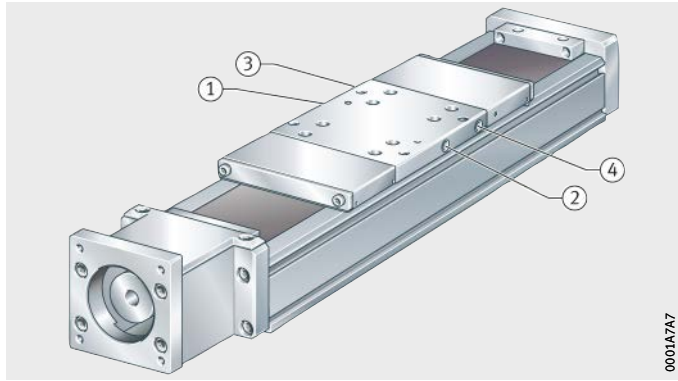

Figure 37
Lubrication points

Grease quantities

Designation	Driven carriage unit		Non-driven carriage unit
	① and ② g	③ or ④	① and ② g
MKUVS32-30-KGT	0,5	1 pulse per 100 mm of travel	0,5
MKUVS32-30-KGT-OA	–	–	0,5
MKUVS32-80-KGT	1	1 pulse per 100 mm of travel	1
MKUVS32-80-KGT-OA	–	–	1
MSDKUVE15-120-KGT	1	1 pulse per 100 mm of travel	1
MSDKUVE15-120-KGT-OA	–	–	1
MSDKUVE15-80-KGT	0,5	1 pulse per 100 mm of travel	0,5
MSDKUVE15-80-KGT-OA	–	–	0,5

For lubrication of the linear recirculating ball bearing units, the lubrication points ① and ② must always be lubricated. For lubrication of the ball screw drive, it is sufficient to supply lubricant to the lubrication point ③ or ④.

Relubrication procedure

Relubrication should be carried out while the carriage unit is moving and warm from operation over a minimum stroke length corresponding to one carriage unit length.

The carriage unit must be moved slowly during relubrication of the spindle nut, *Figure 37*, page 494.

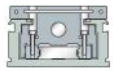

For relubrication, a conical or needlepoint grease nozzle must be used to press the lubricant into the lubrication nipple.

During lubrication, it must be ensured that the grease gun, lubrication nipple, environment of the lubrication nipple and the grease are clean.

The lubrication method involves loss of lubricant. The used lubricant must be collected and disposed of by methods that help to protect the environment.

The handling and use of lubricants is governed by national regulations for environmental protection and occupational safety as well as information from the lubricant manufacturers. These regulations must be observed.

Lubrication nipples

In the case of compact actuators MKUVS32 and MSKKUVE15, the guidance system and ball screw drive are relubricated exclusively via countersunk funnel type lubrication nipples in the longitudinal sides of the carriage unit, *Figure 38*.

MKUVS32
MSDKUVE15

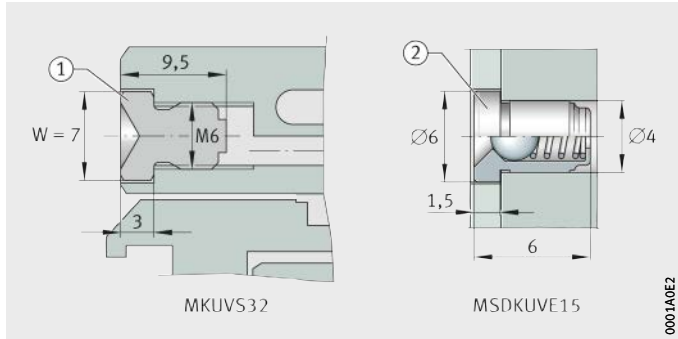

Figure 38
Lubrication nipples

The carriage units of compact actuators MKUVS32 can be connected to a central lubrication system. In this case, the funnel type lubrication nipples must be replaced by a straight or angled screw-in connector with a M6×1 thread. The central lubrication system is connected by means of pipes or hoses.

Application in special environments

In vacuum applications, lubricants with low vapourisation rates are required in order to maintain the vacuum atmosphere.

In the foodstuffs sector and in clean rooms, special requirements are also placed on lubricants in relation to emissions and compatibility. For such environmental conditions, please consult the grease manufacturer.

Maximum permissible spindle speed

Screw drives must not be allowed to run in the critical speed range.

The critical speed is dependent on:

- the spindle length
- the spindle diameter
- the type of installation.

The carriage unit velocity v is determined from the spindle speed n and the spindle pitch P. The carriage unit velocity is valid for all series and sizes, see equation, table, *Figure 39* and *Figure 40*, page 497.

The travel velocity is calculated as follows:

$$v = \frac{n \cdot P}{60 \cdot 1000}$$

v Carriage unit travel velocity	m/s
n Spindle speed	min^{-1}
P Spindle pitch.	mm

Carriage unit velocity

Speed	Spindle pitch						
	P = 2	P = 4	P = 5	P = 10	P = 16	P = 20	P = 50
n	Carriage unit velocity v						
min^{-1}	m/s	m/s	m/s	m/s	m/s	m/s	m/s
0	–	–	–	–	–	–	–
500	0,02	0,03	0,04	0,08	0,12	0,17	0,4
1 000	0,03	0,07	0,8	0,17	0,28	0,33	0,85
1 500	0,05	0,1	0,13	0,25	0,4	0,5	1,25
2 000	0,07	0,13	0,17	0,33	0,52	0,67	1,65
2 500	0,08	0,17	0,21	0,42	0,68	0,83	2,1
3 000	0,1	0,2	0,25	0,5	0,8	1	2,5

MKUVS32..-KGT

L_2 = profile length
v = travel velocity
P = pitch

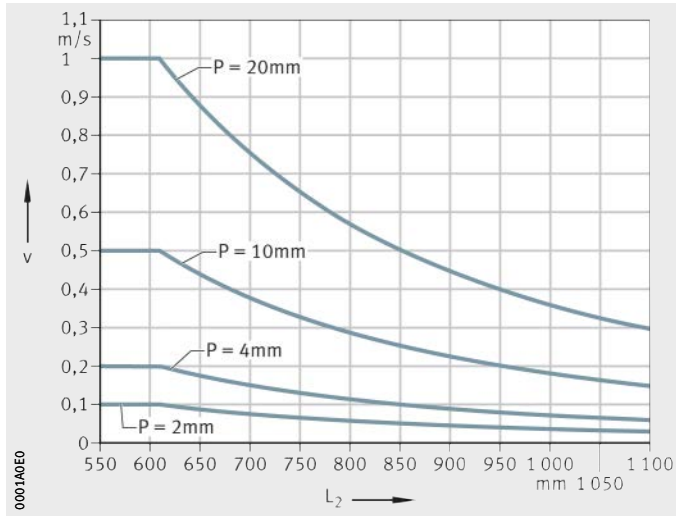

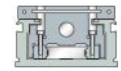

Figure 39
Maximum travel velocity of carriage unit

MSDKUVE15..-KGT

L_2 = profile length
v = travel velocity
P = pitch

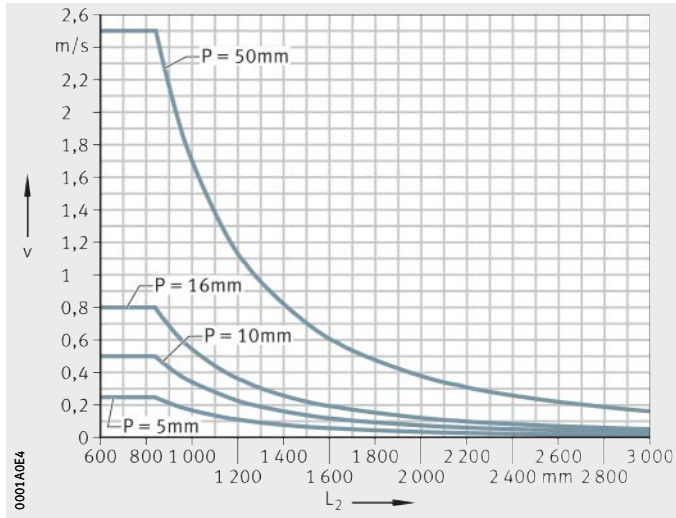

Figure 40
Maximum travel velocity of carriage unit

Kinematic operating limits

Maximum velocities are determined as a function of the critical spindle speed, see table. The limiting speed of the bearings can also restrict the spindle speed and thus the velocity.

Kinematic operating limits

Actuator	Acceleration a m/s²	Maximum velocity v m/s	Maximum spindle speed n min⁻¹
MKUVS32..-KGT/2	30	0,1	3 000[1)]
MKUVS32..-KGT/4		0,2	
MKUVS32..-KGT/10		0,5	
MKUVS32..-KGT/20		1	
MSDKUVE15..-KGT/5	30	0,25	3 000[1)]
MSDKUVE15..-KGT/10		0,5	
MSDKUVE15..-KGT/16		0,8	
MSDKUVE15..-KGT/50		2,5	

1) Restricted by the limiting speed of the locating bearing with grease lubrication.

Mounting position and mounting arrangement

Due to their construction and the linear guidance system fitted, compact actuators are suitable for all mounting positions and mounting arrangements. Possible mounting arrangements are shown starting *Figure 35*, page 95.

The compact actuators can be used in the “common” horizontal mounting position and also in a vertical mounting position.

Mounting of compact actuators with a carriage unit to one side or suspended overhead is possible.

The ball screw drives in the compact actuators are not self-locking. The carriage unit and load must be secured against autonomous travel or dropping if the actuators are used in a vertical or tilted mounting position. This can be achieved, for example, by means of a brake or counterweight. The drop guard must function in manual operation as well as in motor operation, especially if the motor has no current.

Safety guidelines, especially in relation to personal protection, must be observed.

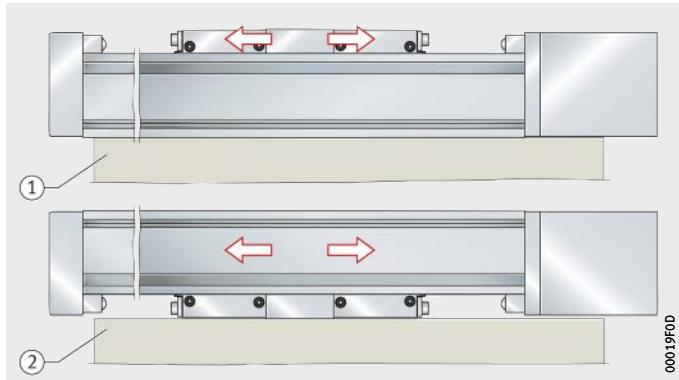

① Movable carriage unit
② Stationary carriage unit

Figure 41
Movable or stationary carriage unit

① Horizontal
② Tilted
③ Vertical

Figure 42
Mounting positions

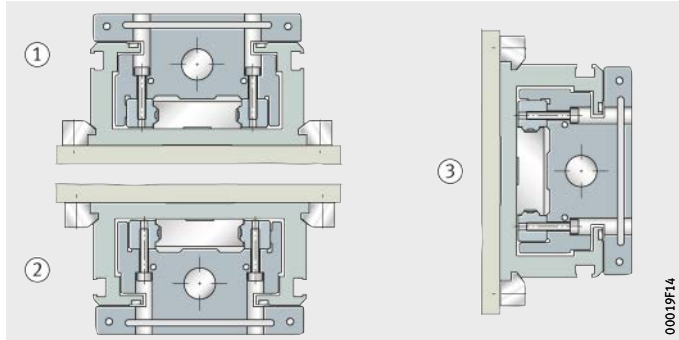

Mounting position 0°
Mounting position 180°
Mounting position 90°

Figure 43
Mounting positions

Mounting

In most applications, an actuator is mounted in two steps:

- location of the support rail on the adjacent construction
- mounting of the components to be moved on the carriage unit or carriage units.

Interchange of actuator components

For the fitting and assembly of actuator components, a fitting and maintenance manual is available for each series of actuator: please consult us.

Maintenance

Failure to carry out maintenance, incorrect maintenance, assembly errors and lubrication errors as well as inadequate protection against contamination can lead to premature failure of actuators.

Maintenance work is restricted in general to relubrication, cleaning and regular visual inspection for damage.

Maintenance intervals, especially the intervals between relubrication, are influenced by:

- the travel velocity of the carriage unit
- the load
- the temperature
- the stroke length
- the environmental conditions and influences.

Guidance parts relevant to function must be greased and supplied with lubricant via appropriate lubrication points.

Cleaning

If heavy contamination is present, the compact actuators must be cleaned. Suitable cleaning tools include paintbrushes, soft brushes and soft cloths.

Abrasives, petroleum ether and oils must not be used.

Accuracy

Length tolerances

The length tolerances of actuators are shown in *Figure 44* and the table.

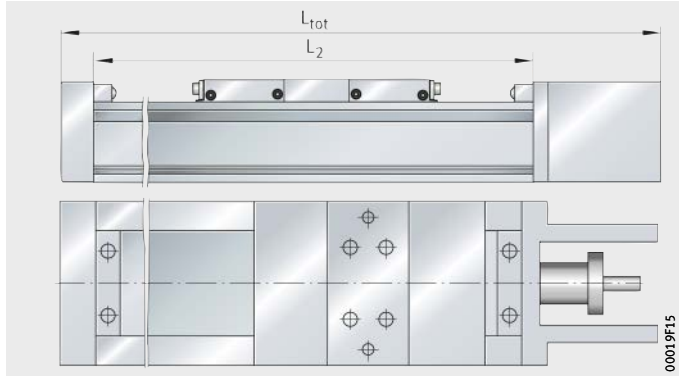

L_{tot} = total length of compact actuator
L_2 = length of carrier profile

Figure 44
Length tolerances

Tolerance for L_{tot}

Designation	Support rail length L_2 mm	Tolerance for L_{tot} mm
MKUVS32	$L_2 \leqq 1\,100$	±0,5
MSDKUVE15	$L_2 \leqq 3\,000$	±0,5

Straightness of support rail

The support rails in actuators are precision straightened and the tolerances are better than DIN 17615.
The tolerances are arithmetic mean values and are stated for individual series, see table.

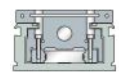

Tolerances

Designation	Support rail length L_2 mm	t_2 mm	t_3 mm	Torsion mm
MKUVS32	$L_2 \leqq 1\,100$	0,4	0,3	0,8
MSDKUVE15	$L_2 \leqq 3\,300$	0,4	0,3	0,8

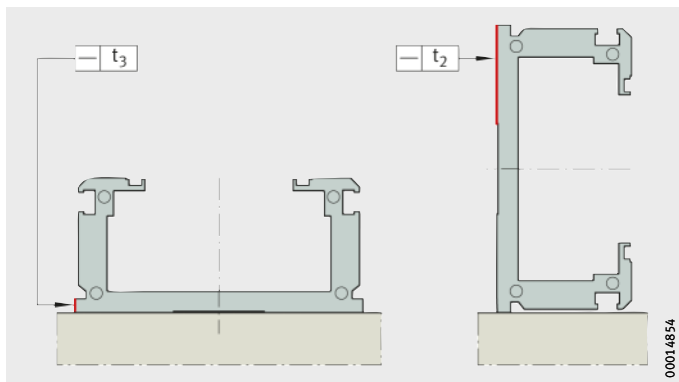

t_2, t_3 = straightness tolerance

Figure 45
Measurement method
for straightness tolerances

Pitch accuracy of spindle

The ball screw drive has a pitch accuracy of 52 µm/300 mm and repeat accuracy of ±20 µm for $L_2 \leqq 550$ mm.

Ordering example, ordering designation

Available designs of compact actuators: see table.

Available designs

Design	Compact actuator with linear recirculating ball bearing and guideway assembly		
Size	Size code		
Carriage plate length	Length	L	mm
Type of drive	Ball screw drive	KGT	
	Without drive	KGT-OA	
Ball screw drive	Spindle pitch	P	mm
	Single nut	F	
Additional carriage unit	Second, non-driven carriage unit	WN2	
		L_{x1}	mm
Additional protection	Covering strip	ADA	
Location of carriage unit	Threaded holes		
Lengths	Total length	L_{tot}	mm
	Total stroke length	G_H	mm

● Standard scope of delivery.

	Designation and suffixes															
	MKUVS32-30				MKUVS32-80				MSDKUVE15-120				MSDKUVE15-80			
	32				32				15				15			
	30				80				120				80			
	KGT				KGT				KGT				KGT			
	KGT-OA				KGT-OA				KGT-OA				KGT-OA			
	2	4	10	20	2	4	10	20	5	10	16	50	5	10	16	50
	F				F				F				F			
	WN2				WN2				WN2				WN2			
	State spacing between carriage units L_{x1}, $L_{x1\ min}$ = 10 mm				State spacing between carriage units L_{x1}, $L_{x1\ min}$ = 10 mm				State spacing between carriage units L_{x1}, $L_{x1\ min}$ = 10 mm				State spacing between carriage units L_{x1}, $L_{x1\ min}$ = 10 mm			
	ADA				ADA				ADA				ADA			
	●				●				●				●			
	to be calculated from total stroke length, page 486															
	to be calculated from effective stroke length, page 486															

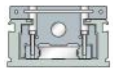

Compact actuator, ball screw drive

Compact actuator with ball screw drive	MKUVS
Size code	32
Carriage plate length L	80
Drive by ball screw drive	KGT
Spindle pitch P	2 mm
Single nut	F
Covering strip	ADA
Second, non-driven carriage unit	WN2
Total length L_{tot}	550 mm
Total stroke length G_H	197 mm
Spacing between carriage units L_{x1}	36 mm

Ordering designation

MKUVS32-80-KGT/2-F-ADA-WN2/550-197 (L_{x1} = 36 mm), *Figure 46*

Note total length L_1 of first carriage unit and carriage unit length L_3 of second carriage unit. Spacing L_{x1} between carriage units must be stated.

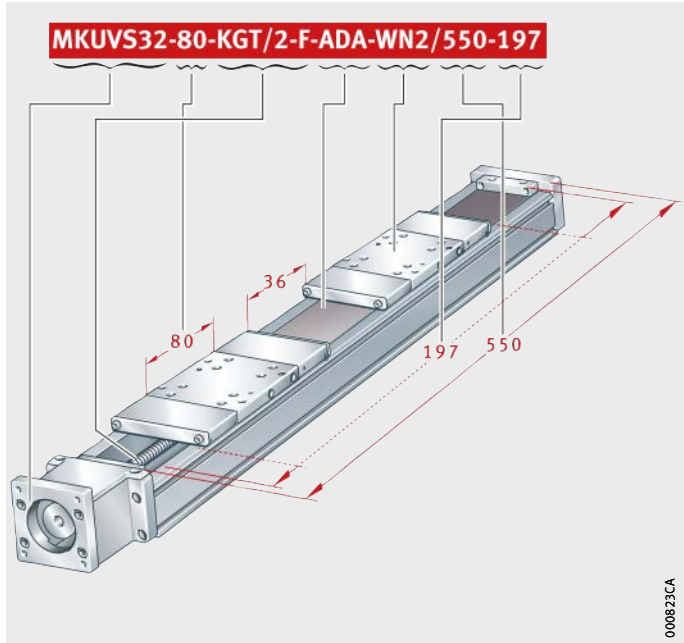

Figure 46
Ordering designation

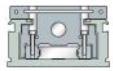

Compact actuator

Recirculating ball guidance system
With or without ball screw drive
Basic design

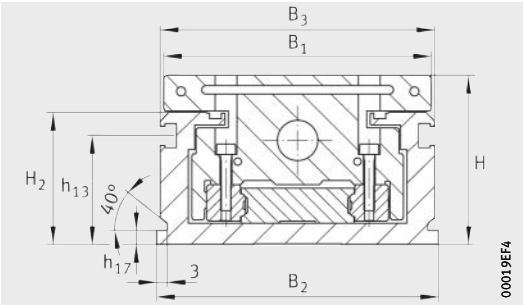

MKUVS32

Dimension table · Dimensions in mm

Designation	Dimensions			Mounting dimensions										
	B_2	H	L_1	b_{87}	B_1	B_3	d_{42} H7	d_{85}	d_{86} H7	G_{43}	G_{87}	h_{13}	h_{17}	h_{85}
MKUVS32-30-KGT/2	80	48	61	46	76	78	3	5	42	M5	M4	30,9	4	29,5
MKUVS32-30-KGT/4														
MKUVS32-30-KGT/10														
MKUVS32-30-KGT/20														
MKUVS32-30-KGT-OA	80	48	61	46	76	78	3	–	–	M5	–	30,9	4	29,5
MKUVS32-80-KGT/2	80	48	111	46	76	78	3	5	42	M5	M4	30,9	4	29,5
MKUVS32-80-KGT/4														
MKUVS32-80-KGT/10														
MKUVS32-80-KGT/20														
MKUVS32-80-KGT-OA	80	48	111	46	76	78	3	–	–	M5	–	30,9	4	29,5

Calculation of lengths L_2 and L_{tot}, see page 486.

1) ① 2 lubrication nipples NIP A1, see page 496.

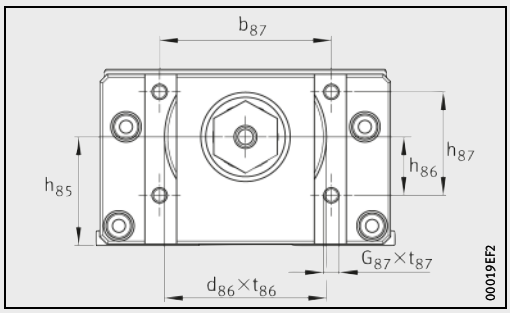

MKUVS32-KGT

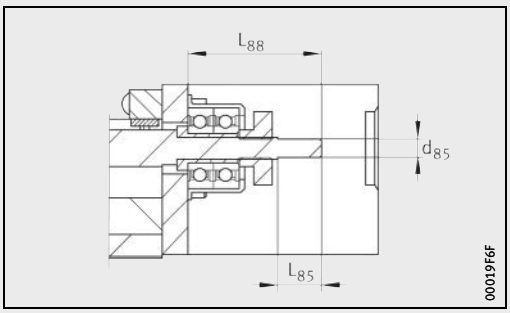

MKUVS32-KGT

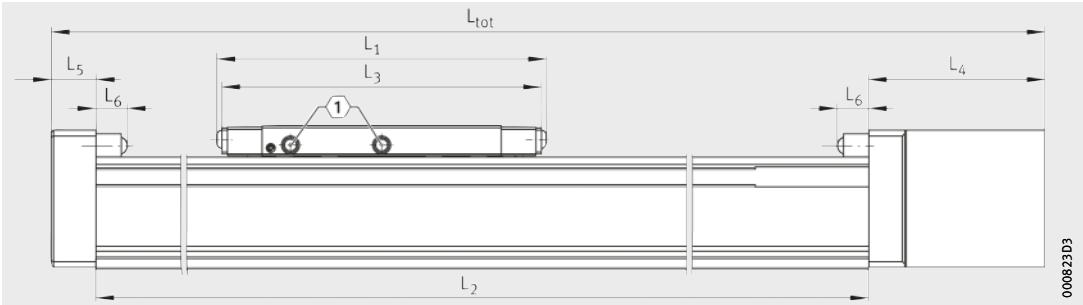

MKUVS32-KGT
1 1)

h_{86}	h_{87}	H_2	J_{B43}	J_{B44} ±0,2	J_{L43}	J_{L44} ±0,2	J_{L45}	L	L_3	L_4	L_5	L_6	L_{85}	L_{88}	t_{42}	t_{43}	t_{86}	t_{87}
15,8	28	37,5	64	59	50	20	15	30	57	59	15	10,5	12	36,5	4	10	3,5	12
15,8	28	37,5	64	59	50	20	15	30	57	15	15	10,5	–	–	4	10	–	–
15,8	28	37,5	64	59	50	20	15	80	107	59	15	10,5	12	36,5	4	10	3,5	12
15,8	28	37,5	64	59	50	20	15	80	107	15	15	10,5	–	–	4	10	–	–

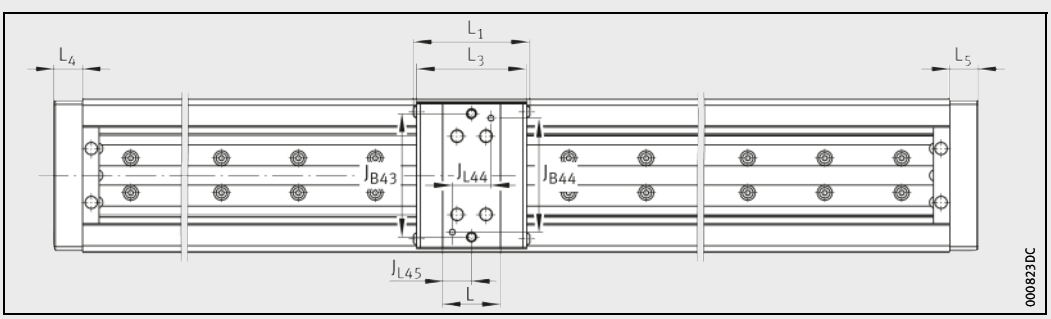

MKUVS32..-KGT-OA

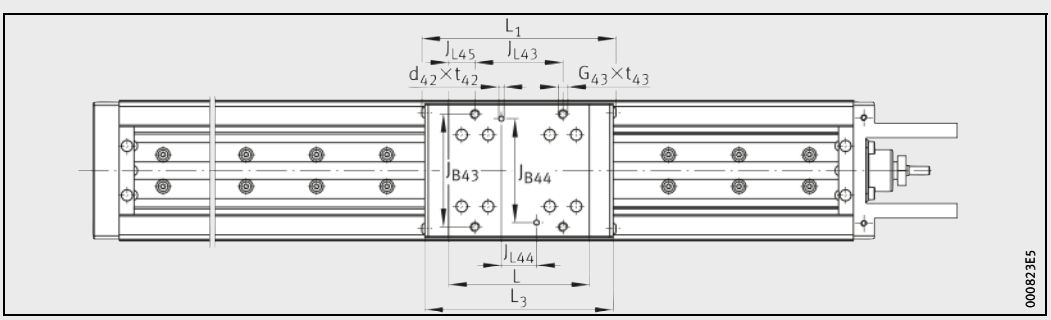

MKUVS32-80-KGT

Compact actuator

Recirculating ball guidance system
With or without ball screw drive
With covering strip

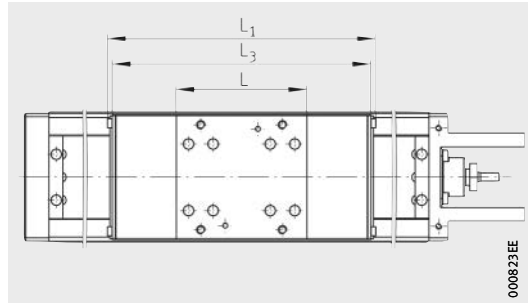

MKUVS32-80-KGT..-ADA

Dimension table · Dimensions in mm

Designation	Dimensions		
	L	L_1	L_3
MKUVS32-30-KGT/2-ADA	30	117	111
MKUVS32-30-KGT/4-ADA			
MKUVS32-30-KGT/10-ADA			
MKUVS32-30-KGT/20-ADA			
MKUVS32-30-KGT-OA-ADA	30	117	111
MKUVS32-80-KGT/2-ADA	80	167	161
MKUVS32-80-KGT/4-ADA			
MKUVS32-80-KGT/10-ADA			
MKUVS32-80-KGT/20-ADA			
MKUVS32-80-KGT-OA-ADA	80	167	161

Other geometrical features, see page 506 and page 507.

Compact actuator

Recirculating ball guidance system
With or without ball screw drive
Second, non-driven carriage unit
With or without covering strip

Dimension table · Dimensions in mm

Designation Second, non-driven carriage unit	Designation (continued) Second, non-driven carriage unit	Dimensions $L_{x1\ min}$
MKUVS32-30-KGT/2-WN2	**MKUVS32-30-KGT/2-ADA-WN2**	10
MKUVS32-30-KGT/4-WN2	**MKUVS32-30-KGT/4-ADA-WN2**	
MKUVS32-30-KGT/10-WN2	**MKUVS32-30-KGT/10-ADA-WN2**	
MKUVS32-30-KGT/20-WN2	**MKUVS32-30-KGT/20-ADA-WN2**	
MKUVS32-30-KGT-OA-WN2	**MKUVS32-30-KGT-OA-ADA-WN2**	10
MKUVS32-80-KGT/2-WN2	**MKUVS32-80-KGT/2-ADA-WN2**	10
MKUVS32-80-KGT/4-WN2	**MKUVS32-80-KGT/4-ADA-WN2**	
MKUVS32-80-KGT/10-WN2	**MKUVS32-80-KGT/10-ADA-WN2**	
MKUVS32-80-KGT/20-WN2	**MKUVS32-80-KGT/20-ADA-WN2**	
MKUVS32-80-KGT-OA-WN2	**MKUVS32-80-KGT-OA-ADA-WN2**	10

Other geometrical features, see page 506 and page 507.

[1] L_{x1} = spacing between carriage units, $L_{x1\ min}$ = minimum spacing between two carriage units.

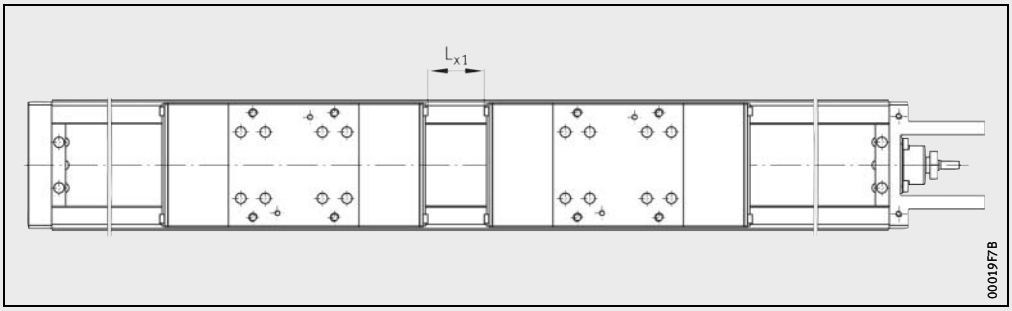

MKUVS32-80-KGT..-ADA-WN2 [1]

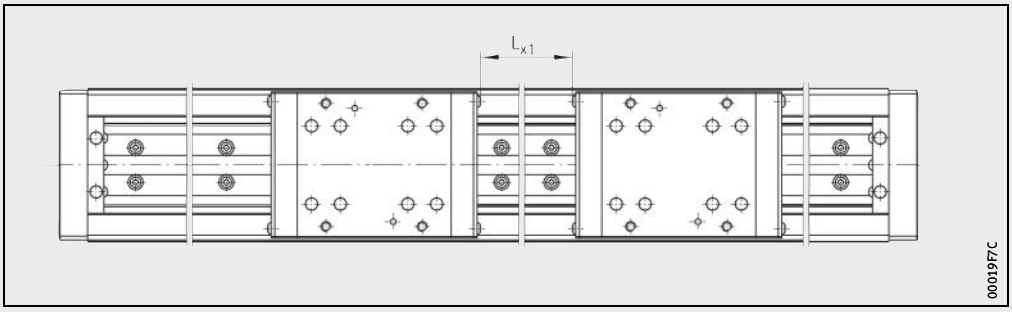

MKUVS32-80-KGT-OA-WN2 [1]

Compact actuator

Recirculating ball guidance system
With or without ball screw drive
Performance data

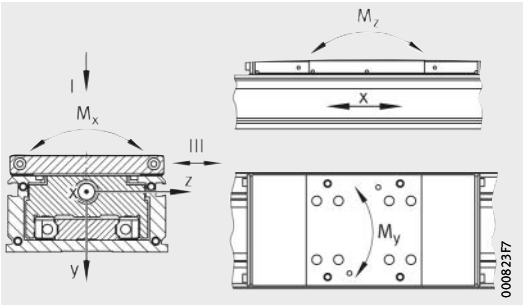

MKUVS32

Performance data

Designation		Basic load ratings per carriage unit[1]				Permissible static moment ratings per carriage unit		
Without covering strip	With covering strip	Load direction I Compressive load		Load direction III Lateral load				
		dyn. C N	stat. C_0 N	dyn. C N	stat. C_0 N	$M_{0x\ per}$ Nm	$M_{0y\ per}$ Nm	$M_{0z\ per}$ Nm
MKUVS32-30-KGT/2	**MKUVS32-30-KGT/2-ADA**	5 700	10 600	5 700	10 600	180	49	49
MKUVS32-30-KGT/4	**MKUVS32-30-KGT/4-ADA**							
MKUVS32-30-KGT/10	**MKUVS32-30-KGT/10-ADA**							
MKUVS32-30-KGT/20	**MKUVS32-30-KGT/20-ADA**							
MKUVS32-30-KGT-OA	**MKUVS32-30-KGT-OA-ADA**	5 700	10 600	5 700	10 600	180	49	49
MKUVS32-80-KGT/2	**MKUVS32-80-KGT/2-ADA**	9 250	21 200	9 250	21 200	365	345	345
MKUVS32-80-KGT/4	**MKUVS32-80-KGT/4-ADA**							
MKUVS32-80-KGT/10	**MKUVS32-80-KGT/10-ADA**							
MKUVS32-80-KGT/20	**MKUVS32-80-KGT/20-ADA**							
MKUVS32-80-KGT-OA	**MKUVS32-80-KGT-OA-ADA**	9 250	21 200	9 250	21 200	365	345	345
MKUVS32-30-KGT/2-WN2	**MKUVS32-30-KGT/2-ADA-WN2**	9 250	21 200	9 250	21 200	365	49	49
MKUVS32-30-KGT/4-WN2	**MKUVS32-30-KGT/4-ADA-WN2**							
MKUVS32-30-KGT/10-WN2	**MKUVS32-30-KGT/10-ADA-WN2**							
MKUVS32-30-KGT/20-WN2	**MKUVS32-30-KGT/20-ADA-WN2**							
MKUVS32-30-KGT-OA-WN2	**MKUVS32-30-KGT-OA-ADA-WN2**	9 250	21 200	9 250	21 200	365	49	49
MKUVS32-80-KGT/2-WN2	**MKUVS32-80-KGT/2-ADA-WN2**	15 000	42 400	15 000	42 400	730	345	345
MKUVS32-80-KGT/4-WN2	**MKUVS32-80-KGT/4-ADA-WN2**							
MKUVS32-80-KGT/10-WN2	**MKUVS32-80-KGT/10-ADA-WN2**							
MKUVS32-80-KGT/20-WN2	**MKUVS32-80-KGT/20-ADA-WN2**							
MKUVS32-80-KGT-OA-WN2	**MKUVS32-80-KGT-OA-ADA-WN2**	15 000	42 400	15 000	42 400	730	345	345

1) The values are single loads and apply if the underside of the actuator is fully supported.
If combined loads are present, please contact us.

2) Dynamic and axial loads for the spindle bearing arrangements.
Applications must not exceed an axial load of 510 N.

3) F = flanged nut.

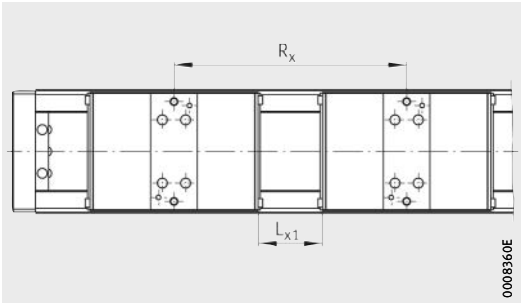

MKUVS32..-KGT..-WN2

Moment of inertia of area of carrier profile		Linear recircu-lating ball bearing units KUVS32	Drive[2]							
			Spindle nut			Spindle bearing arrangement (ZKLR0828-2Z)		Spindle		
		Quantity	Design[3]	Basic load rating		Locating bearing		Diameter d_0	Pitch P	Mass moment of inertia
I_y cm^4	I_z cm^4			dyn. C_a N	stat. C_0 N	dyn. C_a N	stat. C_{0a} N	mm	mm	kg · cm^2
83	14	2	F	2 133	5 300	1 810	1 520	10	2	0,0028
				2 370	5 200				4	
				2 607	5 900				10	
				1 659	4 000				20	
83	14	2	–	–	–	–	–	–	–	–
83	14	4	F	2 133	5 300	1 810	1 520	10	2	0,0028
				2 370	5 200				4	
				2 607	5 900				10	
				1 659	4 000				20	
83	14	4	–	–	–	–	–	–	–	–
83	14	2	F	2 133	5 300	1 810	1 520	10	2	0,0028
				2 370	5 200				4	
				2 607	5 900				10	
				1 659	4 000				20	
83	14	2	–	–	–	–	–	–	–	–
83	14	4	F	2 133	5 300	1 810	1 520	10	2	0,0028
				2 370	5 200				4	
				2 607	5 900				10	
				1 659	4 000				20	
83	14	4	–	–	–	–	–	–	–	–

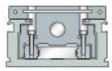

Compact actuator

Recirculating ball guidance system
With or without ball screw drive
Basic design

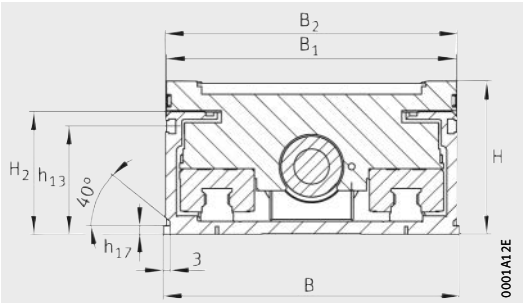

MSDKUVE15

Dimension table · Dimensions in mm

Designation	Dimensions			Mounting dimensions										
	B	H	L	b_{87}	B_1	B_2	d_{42} H7	d_{85}	d_{86}	G_{43}	G_{87}	h_{13}	h_{17}	h_{85}
MSDKUVE15-120-KGT/5	135	70	120	100	132	133	5	10	48	M5	M4	49,4	4	31
MSDKUVE15-120-KGT/10														
MSDKUVE15-120-KGT/16														
MSDKUVE15-120-KGT/50														
MSDKUVE15-120-KGT-OA	135	70	120	100	132	133	5	–	–	M5	–	49,4	4	31
MSDKUVE15-80-KGT/5	135	70	80	100	132	133	5	10	48	M5	M4	49,4	4	31
MSDKUVE15-80-KGT/10														
MSDKUVE15-80-KGT/16														
MSDKUVE15-80-KGT/50														
MSDKUVE15-80-KGT-OA	135	70	80	100	132	133	5	–	–	M5	–	49,4	4	31

Calculation of lengths L_2 and L_{tot}, see page 486.

1) ① 2 lubrication nipples DIN 3405-A M6, see page 496.

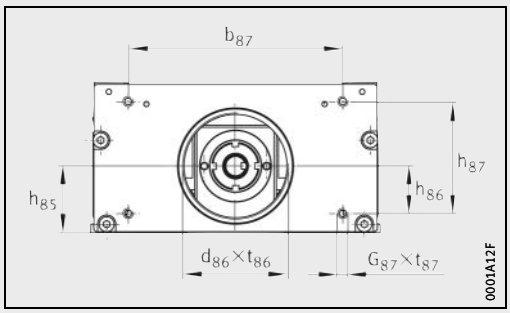

MSDKUVE15-120-KGT

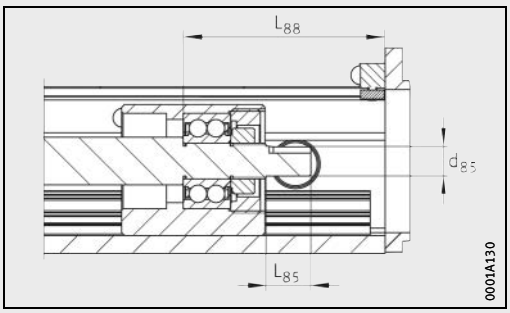

MSDKUVE15-120-KGT

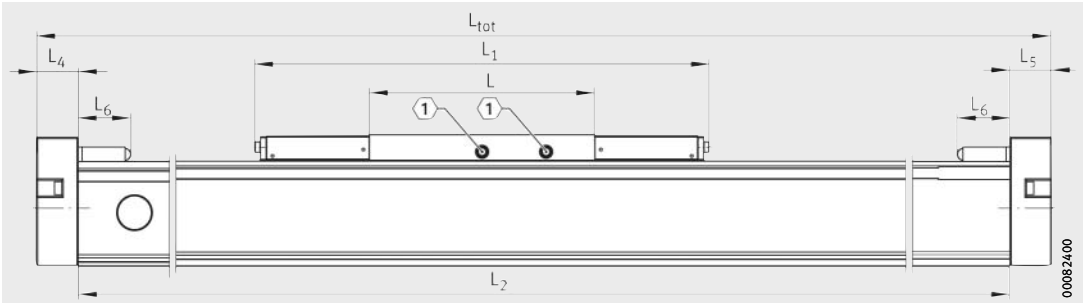

MSDKUVE15..-KGT-OA
1) [1]

h_{86}	h_{87}	H_2	J_{B43}	J_{B44} ±0,2	J_{L43}	J_{L44} ±0,2	J_{L45}	L_1	L_4	L_5	L_6	L_{85}	L_{88}	t_{42}	t_{43}	t_{86}	t_{87}
22	52	56	120	120	50	30	100	241	8,5	22,5	27,9	15	67,6	13,5	13,5	8,5	8,5
22	52	56	120	120	50	30	100	–	22,5	22,5	27,9	–	–	13,5	13,5	–	–
22	52	56	120	120	60	30	–	201	8,5	22,5	27,9	15	67,6	13,5	13,5	8,5	8,5
22	52	56	120	120	60	30	–	–	22,5	22,5	27,9	–	–	13,5	13,5	–	–

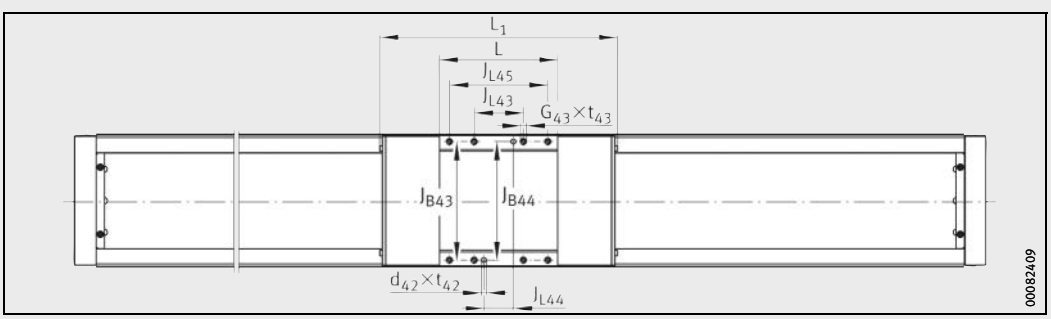

MSDKUVE15..-KGT-OA-ADA

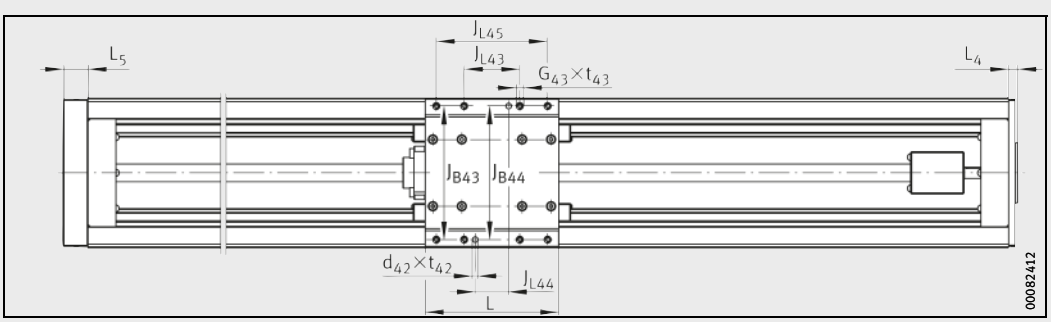

MSDKUVE15-80-KGT

Compact actuator

Recirculating ball guidance system
With or without ball screw drive
With covering strip

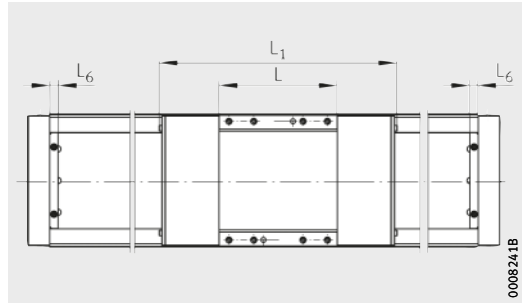

MSDKUVE15-80-KGT..-ADA

Dimension table · Dimensions in mm

Designation	Dimensions		
	L	L_1	L_6
MSDKUVE15-120-KGT/5-ADA	120	241	11,5
MSDKUVE15-120-KGT/10-ADA			
MSDKUVE15-120-KGT/16-ADA			
MSDKUVE15-120-KGT/50-ADA			
MSDKUVE15-120-KGT-OA-ADA	120	241	11,5
MSDKUVE15-80-KGT/5-ADA	80	201	11,5
MSDKUVE15-80-KGT/10-ADA			
MSDKUVE15-80-KGT/16-ADA			
MSDKUVE15-80-KGT/50-ADA			
MSDKUVE15-80-KGT-OA-ADA	80	201	11,5

Other geometrical features, see page 506 and page 507.

Compact actuator

Recirculating ball guidance system
With or without ball screw drive
Second, non-driven carriage unit
With or without covering strip

Dimension table · Dimensions in mm

Designation Second, non-driven carriage unit	Designation (continued) Second, non-driven carriage unit	Dimensions $L_{x1\ min}$
MSDKUVE15-120-KGT/5-WN2	**MSDKUVE15-120-KGT/5-ADA-WN2**	10
MSDKUVE15-120-KGT/10-WN2	**MSDKUVE15-120-KGT/10-ADA-WN2**	
MSDKUVE15-120-KGT/16-WN2	**MSDKUVE15-120-KGT/16-ADA-WN2**	
MSDKUVE15-120-KGT/50-WN2	**MSDKUVE15-120-KGT/50-ADA-WN2**	
MSDKUVE15-120-KGT-OA-WN2	**MSDKUVE15-120-KGT-OA-ADA-WN2**	10
MSDKUVE15-80-KGT/5-WN2	**MSDKUVE15-80-KGT/5-ADA-WN2**	10
MSDKUVE15-80-KGT/10-WN2	**MSDKUVE15-80-KGT/10-ADA-WN2**	
MSDKUVE15-80-KGT/16-WN2	**MSDKUVE15-80-KGT/16-ADA-WN2**	
MSDKUVE15-80-KGT/50-WN2	**MSDKUVE15-80-KGT/50-ADA-WN2**	
MSDKUVE15-80-KGT-OA-WN2	**MSDKUVE15-80-KGT-OA-ADA-WN2**	10

Other geometrical features, see page 506 and page 507.

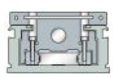

1) L_{x1} = spacing between carriage units, $L_{x1\ min}$ = minimum spacing between two carriage units.

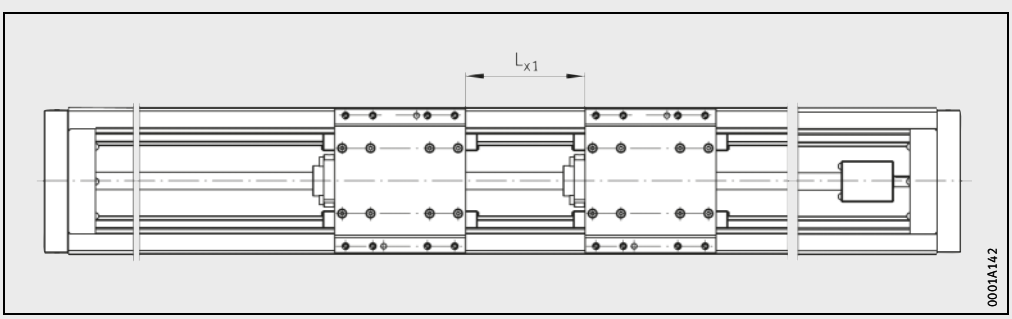

MSDKUVE15..-KGT..-WN2 1)

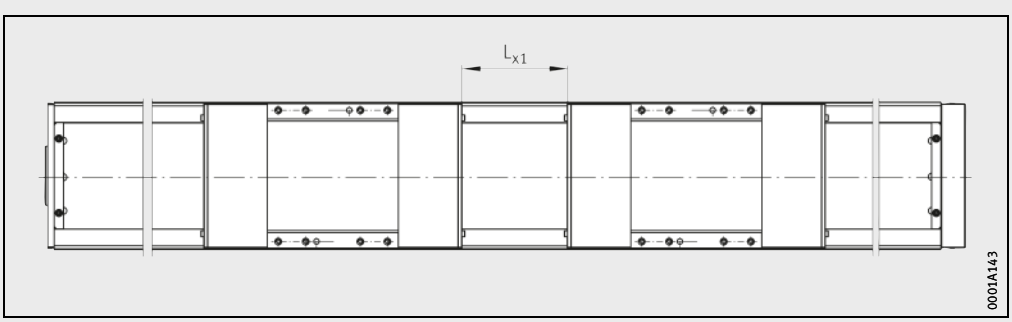

MSDKUVE15..-KGT..-ADA-WN2 1)

Compact actuator

Recirculating ball guidance system
With or without ball screw drive
Performance data

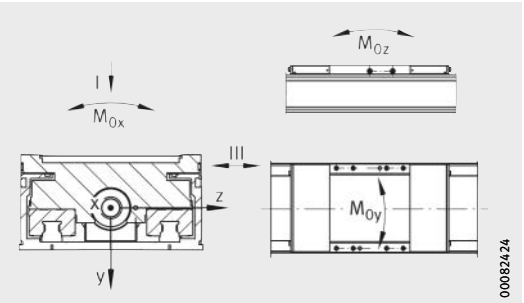

MSDKUVE15

Performance data

Designation	Basic load ratings per carriage unit[1]				Permissible static moment ratings per carriage unit[3]			Moment of inertia of area of carrier profile	
	Load direction I Compressive load		Load direction III Lateral load						
	dyn. C N	stat. C_0 N	dyn. C N	stat. C_0 N	$M_{0x\ per}$ Nm	$M_{0y\ per}$ Nm	$M_{0z\ per}$ Nm	I_y cm^4	I_z cm^4
MSDKUVE15-120-KGT/5 (-ADA)	19 000	58 000	19 000	58 000	1 650	770	1 620	370	51
MSDKUVE15-120-KGT/10 (-ADA)									
MSDKUVE15-120-KGT/16 (-ADA)									
MSDKUVE15-120-KGT/50 (-ADA)									
MSDKUVE15-120-KGT-OA (-ADA)	19 000	58 000	19 000	58 000	1 650	770	1 620	370	51
MSDKUVE15-80-KGT/5 (-ADA)	12 930	33 200	12 930	33 200	1 200	500	565	370	51
MSDKUVE15-80-KGT/10 (-ADA)									
MSDKUVE15-80-KGT/16 (-ADA)									
MSDKUVE15-80-KGT/50 (-ADA)									
MSDKUVE15-80-KGT-OA (-ADA)	12 930	33 200	12 930	33 200	1 200	500	565	370	51
MSDKUVE15-120-KGT/5-WN2 (-ADA, -WN2)	30 850	116 000	30 850	116 000	1 650	770	1 620	370	51
MSDKUVE15-120-KGT/10-WN2 (-ADA, -WN2)									
MSDKUVE15-120-KGT/16-WN2 (-ADA, -WN2)									
MSDKUVE15-120-KGT/50-WN2 (-ADA, -WN2)									
MSDKUVE15-120-KGT-OA-WN2 (-ADA, -WN2)	30 850	116 000	30 850	116 000	1 650	770	1 620	370	51
MSDKUVE15-80-KGT/5-WN2 (-ADA, -WN2)	21 000	66 400	21 000	66 400	1 200	500	565	370	51
MSDKUVE15-80-KGT/10-WN2 (-ADA, -WN2)									
MSDKUVE15-80-KGT/16-WN2 (-ADA, -WN2)									
MSDKUVE15-80-KGT/50-WN2 (-ADA, -WN2)									
MSDKUVE15-80-KGT-OA-WN2 (-ADA, -WN2)	21 000	66 400	21 000	66 400	1 200	500	565	370	51

1) The values are single loads and apply if the underside of the actuator is fully supported.
If combined loads are present, please contact us.

2) Dynamic and axial loads for the spindle bearing arrangements.
Applications must not exceed an axial load of 510 N.

3) Attention!
Valid only for design WN2:
M_{0y} and M_{0z} are dependent on L_{x1}.
For the calculation of applications with moment loads, please contact us.

4) F = flanged nut.

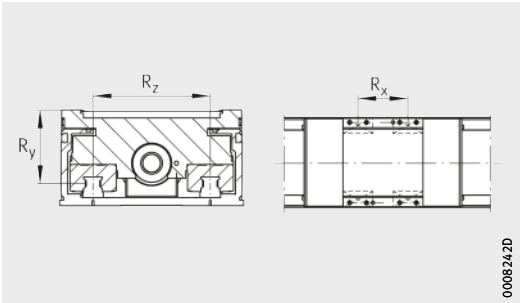

Mounting geometry of carriages

Carriage				Drive[2)]						
				Spindle nut			Spindle bearing arrangement (3201-BB-2RSR.TVH)		Spindle	
	Spacings			Design[4)]	Basic load ratings		Locating bearing		Diameter d_0	Pitch P
	R_x mm	R_y mm	R_z mm		dyn. C_a N	stat. C_0 N	dyn. C_a N	stat. C_{0a} N	mm	mm
4×KWVE15-B-S	80	64	86,6	F	7 500	12 200	10 600	5 850	16	5
					7 000	12 100				10
					7 050	14 000				16
					4 800	11 000				50
4×KWVE15-B-S	80	64	86,6	–	–	–	–	–	–	–
4×KWVE15-B-ESC	–	64	86,6	F	7 500	12 200	10 600	5 850	16	5
					7 000	12 100				10
					7 050	14 000				16
					4 800	11 000				50
4×KWVE15-B-ESC	–	64	86,6	–	–	–	–	–	–	–
4×KWVE15-B-S	80	64	86,6	F	7 500	12 200	10 600	5 850	16	5
					7 000	12 100				10
					7 050	14 000				16
					4 800	11 000				50
4×KWVE15-B-S	80	64	86,6	–	–	–	–	–	–	–
4×KWVE15-B-ESC	–	64	86,6	F	7 500	12 200	10 600	5 850	16	5
					7 000	12 100				10
					7 050	14 000				16
					4 800	11 000				50
4×KWVE15-B-ESC	–	64	86,6	–	–	–	–	–	–	–

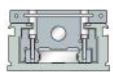

Spring plate couplings

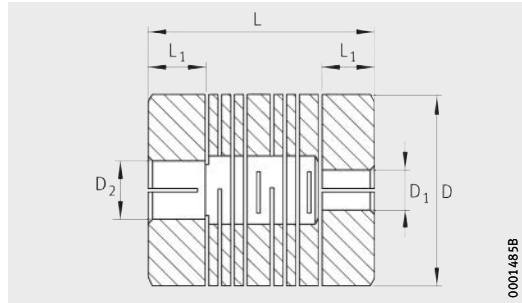

KUP-H

Dimension table · Dimensions in mm

Designation	Dimensions						Dynamic torque	Mass moment of inertia	Screw tightening torque
	D	L	D_1	D_2		L_1	M_{nom}	M_m	M_A
				mm	inch		Nm	kg · cm²	Nm
KUP-H-25-5-6	25	31	5	**6**	–	9	0,9	$2{,}96 \cdot 10^{-6}$	1,34
KUP-H-25-5-6,35	25	31	5	**6,35**	1/4	9	0,9	$2{,}96 \cdot 10^{-6}$	1,34
KUP-H-25-5-8	25	31	5	**8**	–	9	0,9	$2{,}96 \cdot 10^{-6}$	1,34
KUP-H-25-5-9,53	25	31	5	**9,53**	3/8	9	0,8	$2{,}96 \cdot 10^{-6}$	1,34

1) Spring plate couplings have a through hole. This allows the drive shafts to be located deep in the coupling. The drive shafts must not come into contact in the coupling.

Elastomer couplings

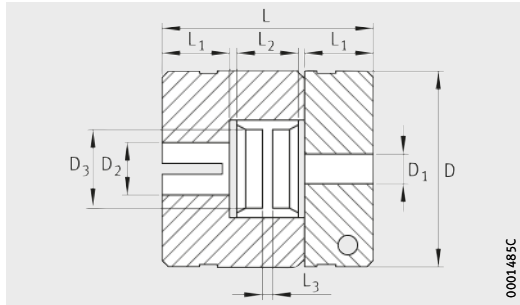

KUP-S

Dimension table · Dimensions in mm

Designation	Dimensions									Dynamic torque	Mass moment of inertia	Screw tightening torque
	D	L	D_1	D_2 mm	D_2 inch	D_3	L_1	L_2	L_3	M_{nom} Nm	M_m kg · cm²	M_A Nm
KUP-S-9-5-2,0-6-2,0	20	30	5	**6**	–	7,2	10	8	1,5	1,5	$1{,}06 \cdot 10^{-6}$	0,76
KUP-S-9-5-2,0-6,35-2,0	20	30	5	**6,35**	1/4	7,2	10	8	1,5	1,5	$1{,}06 \cdot 10^{-6}$	0,76
KUP-S-9-5-2,0-7,94-2,0	20	30	5	**7,94**	5/16	7,2	10	8	1,5	1,5	$1{,}06 \cdot 10^{-6}$	0,76
KUP-S-9-5-2,0-8-2,0	20	30	5	**8**	–	7,2	10	8	1,5	1,5	$1{,}06 \cdot 10^{-6}$	0,76
KUP-S-14-5-2,0-9,53-2,0	30	35	5	**9,53**	3/8	10,5	11	10	2	3,3	$6{,}06 \cdot 10^{-6}$	1,34
KUP-S-14-5-2,0-10-2,0	30	35	5	**10**	–	10,5	11	10	2	3,3	$6{,}06 \cdot 10^{-6}$	1,34
KUP-S-14-5-2,0-12-2,0	30	35	5	**12**	–	10,5	11	10	2	3,3	$6{,}06 \cdot 10^{-6}$	1,34
KUP-S-14-5-2,0-12,7-2,0	30	35	5	**12,7**	1/2	10,5	11	10	2	3,3	$6{,}06 \cdot 10^{-6}$	1,34
KUP-S-14-5-2,0-14-2,0	30	35	5	**14**	–	10,5	11	10	2	3,3	$6{,}06 \cdot 10^{-6}$	1,34
KUP-S-14-5-2,0-16-2,0	30	35	5	**16**	–	10,5	11	10	2	3,3	$6{,}06 \cdot 10^{-6}$	1,34

1) Elastomer couplings have a urethane crosspiece at the centre that prevents through passage of the shafts.

Motor adapter plates

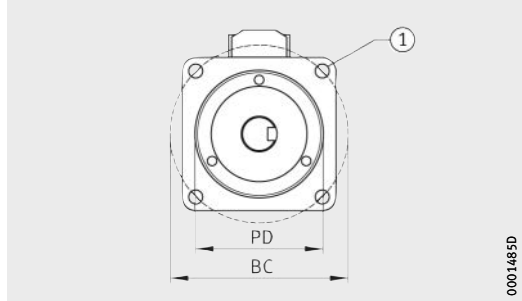

Mounting dimensions for motor adapter plates
1 [3]

Dimension table · Dimensions in mm

Designation	Mounting dimensions				Suitable for coupling[2]
	SL[1]	PD	BC	S	
APL32/70101-MKUVS-KGT	14 – 28	38,1	66,7	M4	KUP-H-25-5-D_2 for 14 < SL < 28 KUP-S-9-5-2,0-D_2-2,0 for 19 < SL < 21
APL32/70102-MKUVS-KGT	14 – 28	30	46,1	M4	KUP-H-25-5-X for 14 < SL < 28 KUP-S-9-5-2,0-X-2,0 for 19 < SL < 23
APL32/70103-MKUVS-KGT	30	50	70	M5	KUP-S-14-5-2,0-D_2-2,0
APL32/70104-MKUVS-KGT	30 – 44	38,1	66,7	M4	KUP-H-25-5-D_2 for 31 < SL < 44 KUP-S-9-5-2,0-D_2-2,0 for 35 < SL < 37 KUP-S-14-5-2,0-D_2-2,0 for 30 < SL < 37
APL32/70105-MKUVS-KGT	25	50	70	M5	KUP-H-25-5-D_2
APL32/70106-MKUVS-KGT	40	110	145	M8	KUP-S-14-5-2,0-D_2-2,0
APL32/70107-MKUVS-KGT	20	40	63	M4	KUP-S-9-5-2,0-D_2-2,0
APL32/70108-MKUVS-KGT	22,7	60	75	M5	KUP-S-9-5-2,0-D_2-2,0
APL32/70109-MKUVS-KGT	31	73,03	98,43	M5	KUP-S-14-5-2,0-D_2-2,0
APL32/70110-MKUVS-KGT	40	70	90	M6	KUP-S-14-5-2,0-D_2-2,0
APL32/70111-MKUVS-KGT	30	70	90	M6	KUP-S-14-5-2,0-D_2-2,0
APL32/70112-MKUVS-KGT	40	80	100	M6	KUP-S-14-5-2,0-D_2-2,0
APL32/70113-MKUVS-KGT	25	25	40	M5	KUP-H-25-5-D_2

1) Shaft length – adapter plate to end of motor shaft.
2) The notation D_2 in the coupling designation indicates the bore for the motor shaft.
3) 1 Through hole for thread S.

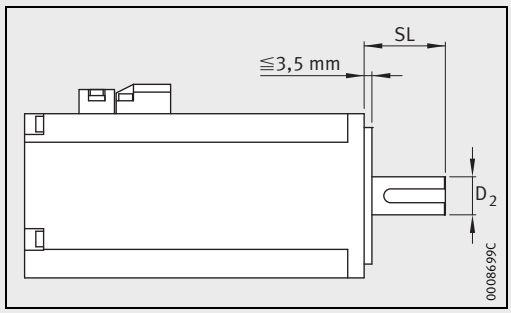

Mounting dimensions for motor adapter plates

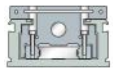

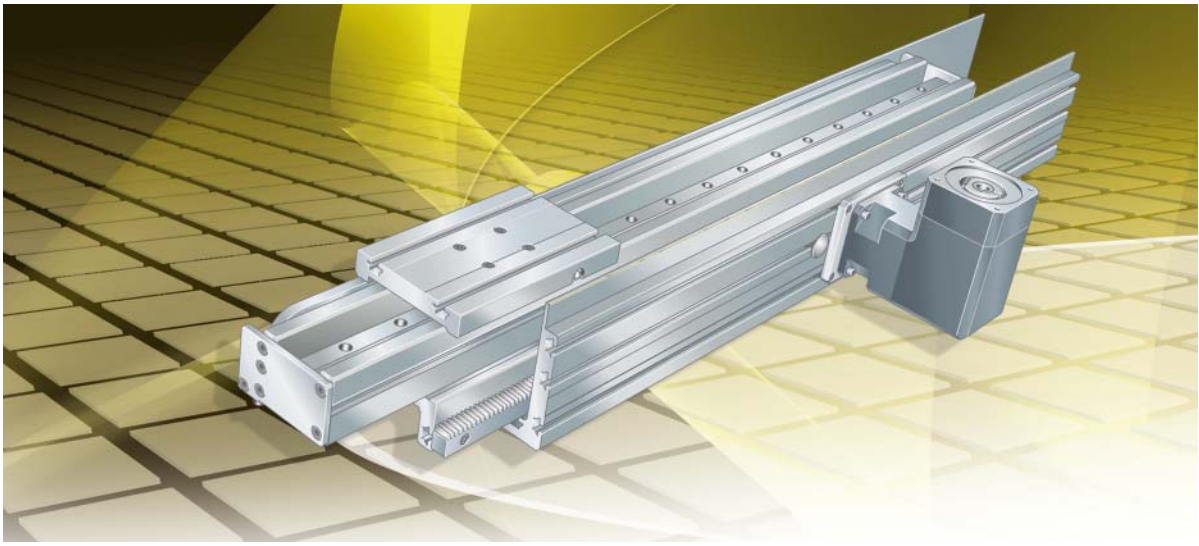

Telescopic actuator with toothed rack drive

Telescopic actuator with toothed rack drive

Telescopic actuator	Characteristics			
	Mounting cross-section width×height mm	Length of carriage unit L mm	Maximum base support rail length L_2 mm	Load carrying capacity
MTKUSE25-200-A-ZS/10..-N	170×175	200	1 000	From all directions
MTKUSE25-200-A-ZS/20..-N	170×175	200	1 000	From all directions

1) Basic load ratings C and C_0 in the compressive direction of the actuator guidance systems.

2) Relative to gearbox input.

Guidance system	Basic load ratings of carriage guidance system[1)]		Toothed rack drive		Ratio of angled gearbox	Maximum travel velocity	Maximum accel-eration	Repeat accuracy	Operating tempera-ture	Mounting position
	dyn. C	stat. C_0	Feed per rev-olution	Maximum drive torque[2)]	i					
	N	N	mm	Nm	–	m/s	m/s^2	mm	°C	
KUSE, preloaded clearance-free	35 300	93 700	39,58	3	1:10	2	10	±0,5	0 to +80	Horizontal
KUSE, preloaded clearance-free	35 300	93 700	19,79	1,5	1:20	2	10	±0,5	0 to +80	Horizontal

Basic design

MTKUSE25-200-A-ZS..-N

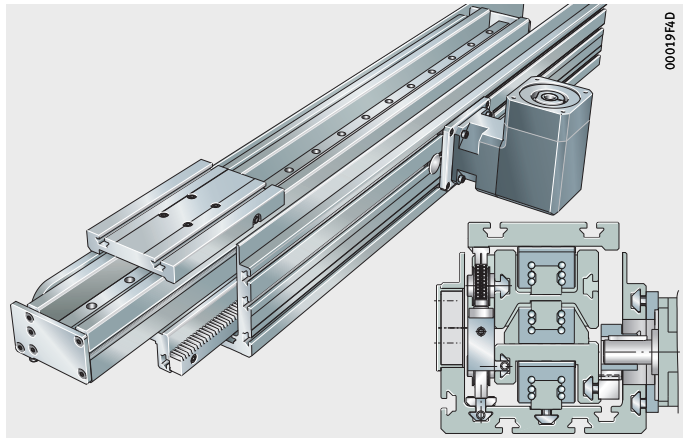

Features

The telescopic actuator MTKUSE25-200-A-ZS..-N comprises:

- a driven carriage unit 200 mm in length with two T-slots
- a base support rail made from aluminium with T-slots for fixing to the adjacent construction
- an intermediate support rail and upper support rail made from aluminium that are telescopically nested inside each other
- a toothed rack drive with straight gear teeth that is mounted laterally in the base support rail
- an angled planetary gearbox with the ratios i = 10 or i = 20
- three six-row linear recirculating ball bearing and guideway assemblies arranged one above the other.

In contrast to most linear actuators, the telescopic actuator MTKUSE25-200-A-ZS..-N has a stroke length that is greater than twice the total length of the base support rail, *Figure 1*. In order to facilitate this, the support rails nested inside each other can be moved to both left and right. The carriage unit travels with and on the upper support rail.

The intermediate support rail is driven with the aid of a toothed rack with straight gear teeth. The upper support rail and the carriage unit follow these movements through positive control by means of a roller chain.

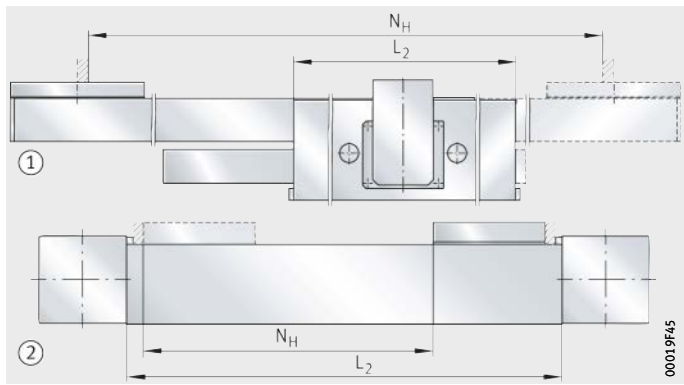

① Telescopic actuator
② Actuator type normally used

Figure 1
Comparison of actuators

Special designs

Special designs are available by agreement. Examples of these are telescopic actuators:

- of an increased capacity design
- fitted with an angled planetary gearbox with different ratios.

Carriage unit

The carriage unit of the telescopic actuator MTKUSE25-200-A-ZS..-N comprises a saddle plate made from anodised profiled aluminium and a carriage KWSE25-HL of the six-row linear recirculating ball bearing and guideway assembly KUSE25-HL, *Figure 2*.

The carriage unit is driven by a roller chain.

The length of the carriage unit is 200 mm.

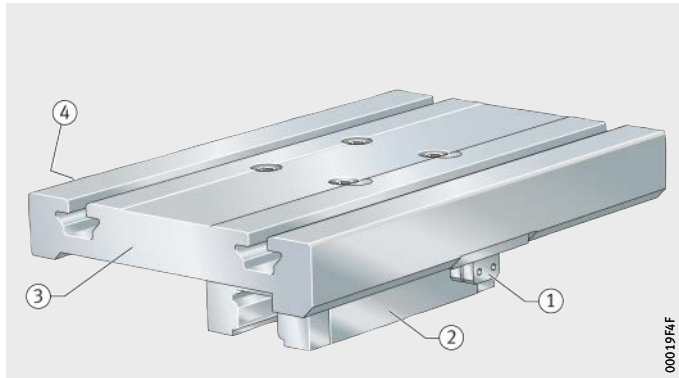

① Connection for chain drive
② Carriage KWSE25..-HL
③ Carriage unit
④ Lubrication nipple (hidden)

Figure 2
Carriage unit

Lubrication

The carriage KWSE25-HL supporting the carriage unit is lubricated via lubrication nipples located on the sides of the carriage unit.

T-slots

The carriage unit has two T-slots for standardised T-nuts.
These are used in order to fix the carriage unit to the adjacent construction.

Telescopic support rail unit

The telescopic support rail unit comprises three support rails made from anodised profiled aluminium and three six-row linear recirculating ball bearing and guideway assemblies KUSE25 each with one carriage KWSE. The linear recirculating ball bearing and guideway assemblies are preloaded and run without stick-slip.

The intermediate and upper support rail are arranged one above the other in the U-shaped base support rail. The support rails travel relative to each other on the linear recirculating ball bearing and guideway assemblies. The carriage unit is supported by the upper linear recirculating ball bearing and guideway assembly. The intermediate linear recirculating ball bearing and guideway assembly is arranged with its top face downwards, *Figure 3*.

① Base support rail
② Linear recirculating ball bearing and guideway assembly KUSE25-HL
③ Intermediate support rail
④ Linear recirculating ball bearing and guideway assembly KUSE25-L
⑤ Upper support rail
⑥ Linear recirculating ball bearing and guideway assembly KUSE25-HL

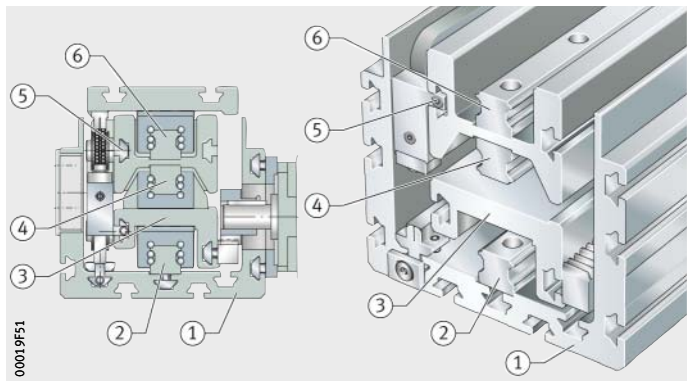

Figure 3
Telescopic support rail unit

Sealing

The carriages of the six-row linear recirculating ball bearing and guideway assemblies have sealing strips and elastic wipers on the end faces. These sealing elements protect the rolling element system against contamination.

Support rail length and effective stroke length

The maximum length of the base support rail L_2 is 1 000 mm, the minimum length L_2 is 200 mm. This gives a minimum effective stroke length $N_{H\ min}$ of 100 mm and a maximum effective stroke length $N_{H\ max}$ of 2 500 mm.

T-slots

The base support rail has T-slots for standardised T-nuts. These are used for fixing to the adjacent construction.

Drive

Angled planetary gearbox and motor

The telescopic actuator is supplied with an angled planetary gearbox GETR-WPLN70, *Figure 4*. The gearbox is already mounted on the base support rail at the time of delivery. The motor is mounted by means of an integrated clamping set.

The gearbox GETR-WPLN70 has the same performance features as the gearboxes PLN, see page 771.
As standard, gearboxes GETR-WPLN70 with ratios of i = 10 and i = 20 are available. Other ratios are available as special designs, please contact us in such cases.

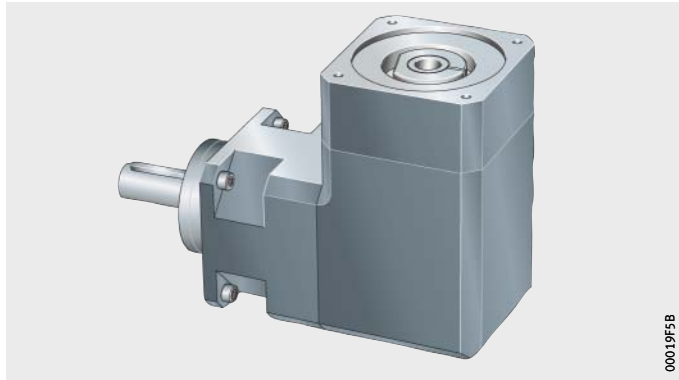

Figure 4
Angled planetary gearbox GETR-WPLN70

Position of motor

The motor with the angled planetary gearbox GETR-WPLN70 can be oriented in four positions, *Figure 5*.

Suffixes

Orientation	Suffix	Orientation	Suffix
Drive from right side	AR	Drive from above	AO
Drive from left side	AL	Drive from below	AU

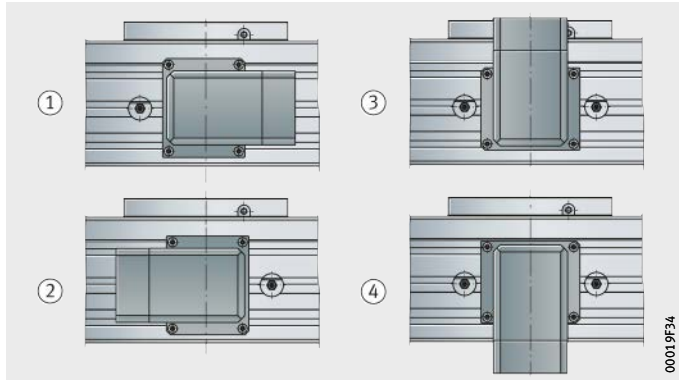

① Drive from right side, AR
② Drive from left side, AL
③ Drive from above, AO
④ Drive from below, AU

Figure 5
Position of drive

Toothed rack

A single-piece toothed rack with straight gear teeth is mounted on the side of the intermediate support rail. The angled planetary gearbox GETR-WPLN70 meshes with this toothed rack by means of a gear wheel and moves the intermediate toothed rack.

Roller chain set

Three twin roller chains in accordance with DIN 8187 move the upper support rail and the carriage unit, *Figure 6*. The roller chains are each wrapped by means of profiled return rollers.

① Upper roller chain
② Attachment of roller chain to carriage unit
③ Attachment of upper roller chain to intermediate support rail
④ Attachment of upper roller chain to base support rail
⑤ Attachment of lower roller chain to upper support rail
⑥ Twin roller chain in accordance with DIN 8187

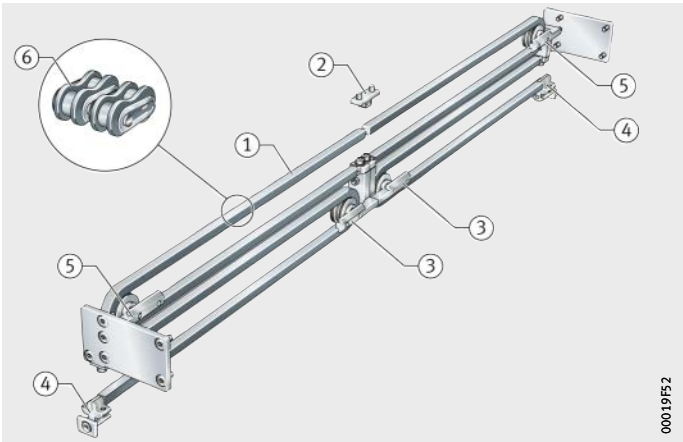

Figure 6
Roller chain set

Accessories

Available accessories for the telescopic actuator are shown in the table.

Available accessories

Accessories	Short designation
T-strip	LEIS
T-nut	MU
Slot closing strip	NAD
T-bolt	SHR
Clamping lug	SPPR
Fixing bracket	WKL

Design and safety guidelines

Load carrying capacity and load safety factor

The load carrying capacities and load safety factors to be observed differ as a function of the mounting position.

Deflection

The deflection of the telescopic actuator is essentially dependent on the projection l and the vertical load F, *Figure 7*. The deflection applies, *Figure 8*, if the vertical load F is introduced at the centre of the carriage unit.

The diagram represents guide values only for the deflection of the telescopic actuator. The effect of deflection on the rating life of the guidance system is not taken into consideration.

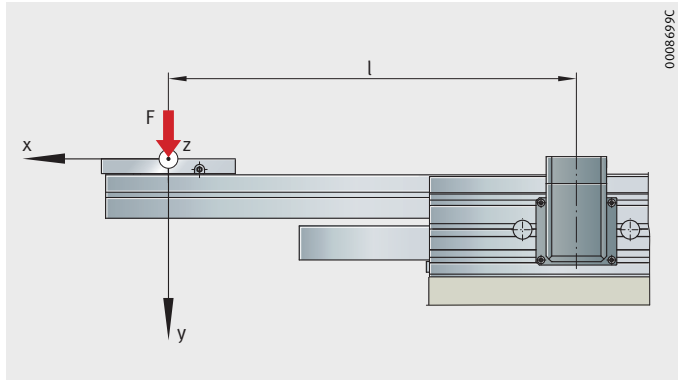

Figure 7
Deflection about the z axis

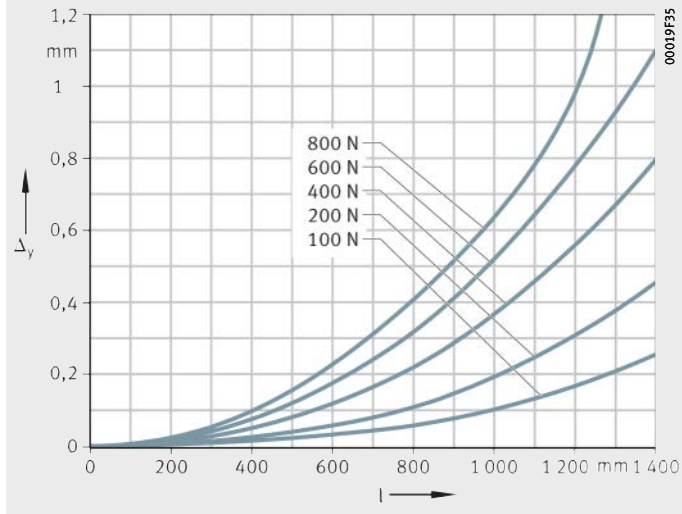

Δ_y = deflection
l = projection

Figure 8
Deflection about the z axis

Idling drive torque

The idling drive torque M_0 of telescopic actuators with toothed rack drive is calculated for a constant velocity and for a horizontal (M_{0h}) mounting position, *Figure 9*. The idling drive torque increases with increasing travel velocity. The data in the diagrams are maximum values.

MTKUSE25-200-A-ZS..-N

v = travel velocity of carriage unit
M_{0h} = idling drive torque

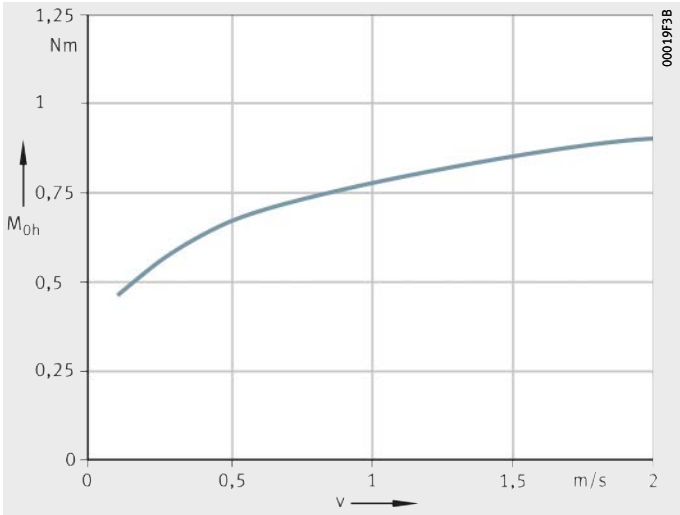

Figure 9
Idling drive torque
Horizontal mounting position

Length calculation of actuators

The length calculation of actuators is based on the required effective stroke length N_H. The effective stroke length N_H must be increased by the addition of safety spacing values on both sides of the travel distance.

Parameters for length calculation

G_H mm
Total stroke length

N_H mm
Effective stroke length

S mm
Safety spacing

L mm
Length of carriage plate

L_2 mm
Length of base support rail

$L_{29\ max}$ mm
Maximum projection of intermediate support rail

L_{30} mm
Maximum projection of upper support rail

L_{tot} mm
Total length of telescopic actuator in central position.

Total stroke length

The total stroke length G_H is determined from the required effective stroke length and the safety spacings.

$$G_H = N_H + 2 \cdot S$$

Total length L_{tot} and support rail length L_2

The length of the base support rail L_2 and the projection lengths L_{29} and L_{30} are calculated according to the following equations.

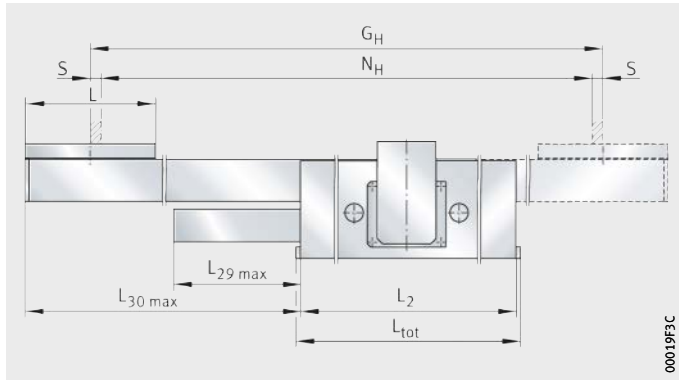

Figure 10
Length parameters
of telescopic actuator

Length of base support rail

$$L_2 = \frac{G_H}{3} + 420$$

Maximum projection of intermediate support rail

$$L_{29} = \frac{G_H}{6} + 44$$

Maximum projection of upper support rail

$$L_{30} = \frac{G_H}{3}$$

Total length of actuator

$$L_{tot} = L_2 + 8$$

Length parameters

Designation	Length of carriage plate	Length of base support rail		Effective stroke length		Safety spacing
	L	$L_{2\,min}$	$L_{2\,max}$	$N_{H\,min}$	$N_{H\,mx}$	S
	mm	mm	mm	mm	mm	mm
MTKUSE25	200	200	1 000	100	2 500	40

Mass calculation

The total mass of the telescopic actuator is calculated from the mass of the actuator without a carriage unit, the motor and the intermediate support rail, upper support rail and carriage unit, *Figure 11*. The masses can be taken from the table.

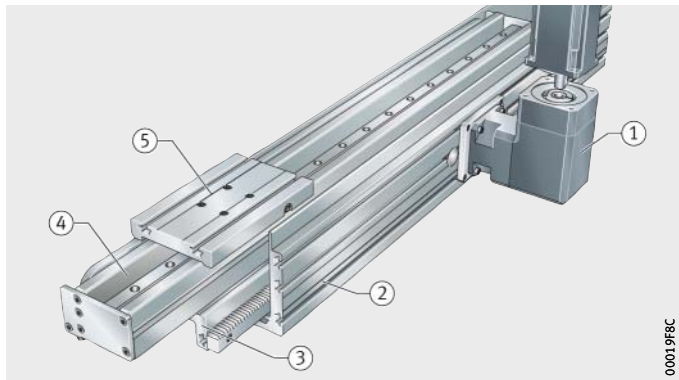

① Angled planetary gearbox
② Base support rail
③ Intermediate support rail
④ Upper support rail
⑤ Carriage unit

Figure 11
Elements for mass calculation

$$m_{mov} = (L_2 - 80) \cdot m_{29} + L_2 + m_{30} + m_{Law}$$

$$m_{tot} = L_2 \cdot m_2 + m_{Wpg} + m_{mov}$$

m_{mov} kg
Mass of moving parts of telescopic actuator

m_{29} kg/mm
Mass of intermediate support rail

m_{30} kg/mm
Mass of upper support rail

m_{Law} kg
Mass of carriage unit

m_{tot} kg
Mass of telescopic actuator

m_2 kg/mm
Mass of base support rail

m_{Wpg} kg
Mass of angled planetary gearbox.

Values for mass calculation

Designation	Mass				
	Angled planetary gearbox	Carriage unit	Base support rail	Inter-mediate support rail	Upper support rail
	m_{Wpg} kg	m_{Law} kg	m_2 kg/mm	m_{29} kg/mm	m_{30} kg/mm
MTKUSE25..-ZS/20-N	4,7	5,9	0,0194	0,008	0,0123
MTKUSE25..-ZS/10-N	3,8	5,9	0,0194	0,008	0,0123

Lubrication

The guidance system in the telescopic actuator is initially greased with a high quality lithium complex soap grease KP2P-30 according to DIN 51825 and must be relubricated during operation.

The carriages in the telescopic actuator are sealed, have an initial greasing and can be relubricated. The toothed rack and drive pinion as well as the roller chains are lubricated directly using an oil can or brush. The return rollers for the roller chains are lubricated for life. The angled planetary gearbox has oil lubrication and is also lubricated for life.

Structure of suitable oils

Greases suitable for the linear recirculating ball bearing and guideway assemblies have the following composition:

- lithium soap or lithium complex soap grease with base oil having a mineral oil base
- special anti-wear additives for loads $C/P < 8$, indicated by “P” in the DIN designation
- base oil viscosity ISO VG 68 to ISO VG 100
- consistency in accordance with NLGI grade 2.

If different greases are used, their miscibility and compatibility must be checked first.

Relubrication intervals

The relubrication intervals are essentially dependent on the following factors:

- the travel velocity of the telescopic actuator
- the load
- the operating temperature
- the stroke length
- the environmental conditions and environmental influences
- the mounting position.

The cleaner the environment, the lower the lubricant consumption.

Calculation of the relubrication interval

Since it is not possible to calculate all the influencing factors, the time at which relubrication must be carried out and the quantity of lubricant which must be used can only be precisely determined under actual operating conditions. If no precise data are available, the value for the relubrication quantity for many applications can be taken from the table, page 538. An approximation method can be used, however, to determine a guide value for many applications, see page 54.

Relubrication must be carried out, irrespective of the result of this calculation, no more than 1 year after the last lubrication.

Fretting corrosion is a consequence of lubricant starvation and is visible as a reddish discolouration of the rolling element raceways. Lubricant starvation can lead to permanent damage to the system and therefore to its failure. It must be ensured that the lubrication intervals are reduced accordingly in order to prevent fretting corrosion.

When calculating the relubrication interval, the grease operating life must also be checked. This is restricted to a maximum of 3 years due to the ageing resistance of the grease. It is the user’s responsibility to request this data from the lubricant manufacturer.

Relubrication quantities

Relubrication should be carried out wherever possible with several partial quantities at various times instead of the complete quantity at the time of the relubrication interval. Grease quantities, see table.

Grease quantities

Linear actuator	Relubrication quantity ≈g
Lubrication nipple in carriage unit	2,5 to 3
Lubrication nipple in intermediate support rail	5 to 6

Relubrication procedure

Relubrication should be carried out whilst the carriage unit is moving and warm from operation over a minimum stroke length corresponding to one carriage unit length.

During lubrication, it must be ensured that the grease gun, grease, lubrication nipple and the environment of the lubrication nipple are clean.

The lubrication method involves loss of lubricant. The used lubricant must be collected and disposed of by methods that help to protect the environment.

The use of lubricants is governed by national regulations for environmental protection and occupational safety as well as information from the lubricant manufacturers. These regulations must be observed in all cases.

Lubrication nipples

The telescopic actuator is fitted with funnel type lubrication nipples NIP DIN 3405-A M6 and a drive fit lubrication nipple NIP A2, *Figure 12*.

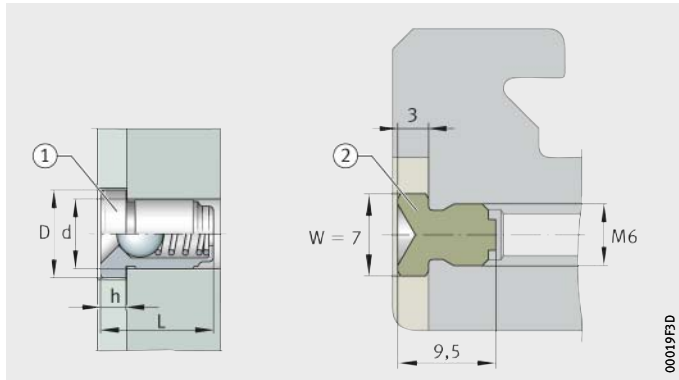

① Drive fit lubrication nipple NIP A2
② Funnel type lubrication nipple NIP DIN 3405-A M6

Figure 12
Lubrication nipples

Relubrication points

For lubrication of the upper linear recirculating ball bearing and guideway assembly, the carriage unit has a funnel type lubrication nipple in accordance with DIN 3405-AM6. The intermediate support rail has two drive fit lubrication nipples NIP A2 for lubrication of the linear recirculating ball bearing and guideway assemblies in the intermediate support rail and the base support rail, *Figure 13*, *Figure 14* and table.

The lubrication points in the intermediate support rail ② can only be accessed when the telescopic actuator is in its central position. The openings in the base support rail are closed off using plastic plugs. The necessary grease quantity for the intermediate and lower linear recirculating ball bearing and guideway assembly can be fed in each case via one lubrication point ② .

MTKUSE25-200-A-ZS..-N

① Lubrication point on carriage unit

② Lubrication point on intermediate support rail

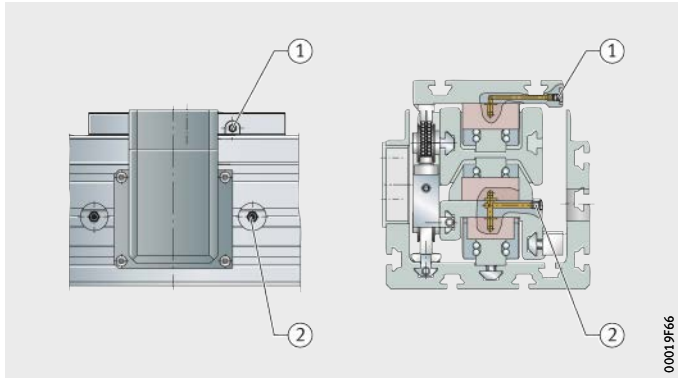

Figure 13
Lubrication points on telescopic actuator

MTKUSE25-200-A-ZS..-N

① Lubrication point on carriage unit

② Lubrication point on intermediate support rail

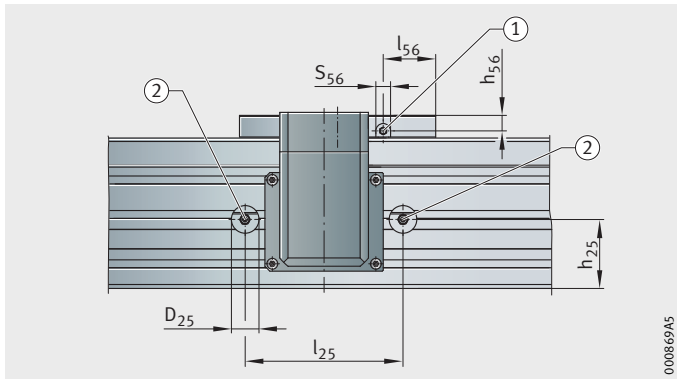

Figure 14
Lubrication points on long carriage unit

Position of relubrication points

Designation	D_{25} mm	h_{25} mm	h_{56} mm	l_{25} mm	l_{56} mm	S_{56} mm
MTKUSE25-200-A-ZS..-N	25	70	15,8	160	53,5	15

T-slots

The base support rail and the carriage unit can be incorporated in modular constructions by means of T-slots. The T-slots in the telescopic actuator are designed for T-bolts according to DIN 787 and T-nuts according to DIN 508, *Figure 15*. The T-slots in the base support rail and the carriage unit are of the same size.

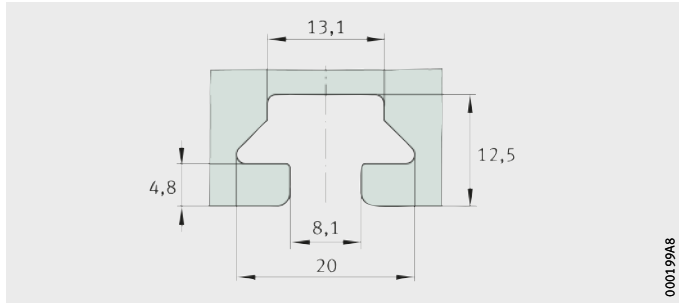

Figure 15
Dimensions of T-slots

Filling openings

T-bolts according to DIN 787 and T-nuts according to DIN 508 can be inserted via the ends of the T-slots.

Mounting position and mounting arrangement

Due to its construction and mode of operation, the telescopic actuator is suitable principally for a horizontal mounting position, *Figure 16*. For other mounting positions, please consult us.

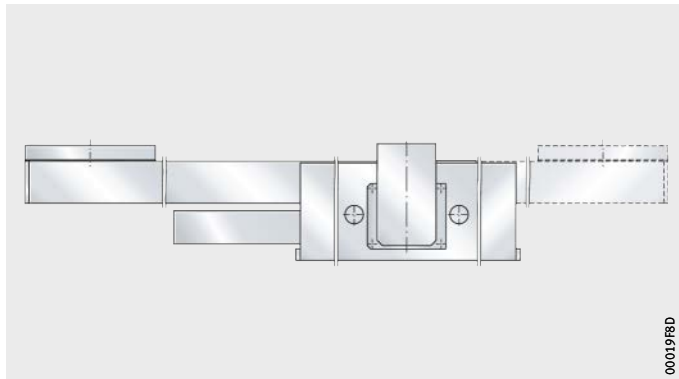

Figure 16
Horizontal mounting position

Mounting

The normal steps in the mounting of the telescopic actuator are as follows:

- location of the base support rail on the adjacent construction
- mounting of the components to be moved on the carriage unit.

Interchange of actuator components

For the fitting and assembly of actuator components, a fitting and maintenance manual is available for each series of actuator: please consult us.

Maintenance

Failure to carry out maintenance, incorrect maintenance, assembly errors and lubrication errors as well as inadequate protection against contamination can lead to premature failure of the telescopic actuator.

Maintenance work is restricted in general to relubrication, cleaning and regular visual inspection for damage.

Maintenance intervals, especially the intervals between relubrication, are influenced by:

- the travel velocity
- the load
- the temperature
- the stroke length
- the environmental conditions and influences.

Guidance parts relevant to function must be greased and supplied with lubricant via appropriate lubrication points.

Cleaning

If heavy contamination is present, the telescopic actuator must be cleaned in order to ensure reliable function. Suitable cleaning tools include paintbrushes, soft brushes and soft cloths.

Abrasives, petroleum ether and oils must not be used.

Accuracy

Length tolerances

The length tolerance of the base support rail, irrespective of the length L_2, is always ±2 mm, *Figure 17*.

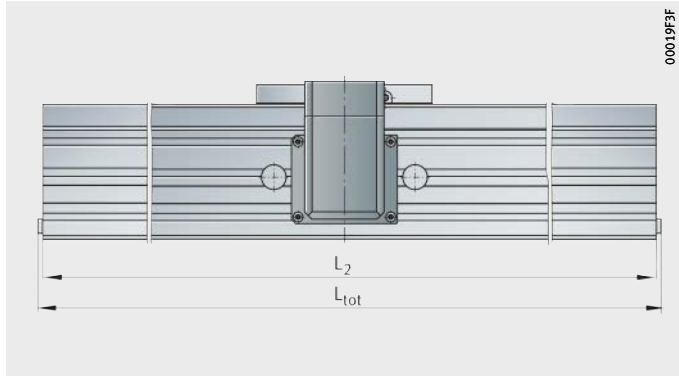

L_{tot} = total length
L_2 = length of support rail

Figure 17
Length tolerance of base support rail

Straightness of support rails

The support rails of the actuators are precision straightened and the tolerances are better than DIN 17615, *Figure 18* and table. The tolerances are arithmetic mean values.

Tolerances

Length L_2 of support rail mm	t_2 mm	t_3 mm	Torsion mm
$200 < L_2 \leqq 1\,000$	0,8	0,7	0,5

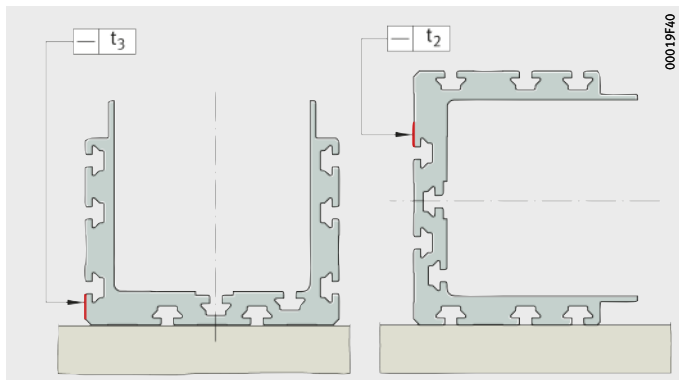

t_2, t_3 = straightness tolerance

Figure 18
Measurement method for straightness tolerances

Ordering example, ordering designation

Available designs of the telescopic actuator MTKUSE, see table.

Available designs

Design	Telescopic actuator with recirculating ball guidance system and toothed rack drive			Designation and suffixes MTKUSE	
Size	Size code			25	
Carriage plate length	Length	L	mm	200	
Design	Basic	A		A	
Type of drive	Toothed rack	ZS		ZS	
Angled gearbox	Ratio	i		1:10, 1:20	
Drive variants	Drive shaft	●		AL, AR, AO, AU	
Carriage unit	T-slots	N		N	
Lengths	Total length	L_{tot}	mm	To be calculated from	total stroke length, see page 534
	Total stroke length	G_H	mm		effective stroke length, see page 534

● Standard scope of delivery.

Linear recirculating ball guidance system, toothed rack drive

Telescopic actuator with linear recirculating ball bearing and guideway assembly	MTKUSE
Size code	25
Carriage plate length L	200 mm
Design	A
Drive by toothed rack	ZS
Ratio	10
Drive from above	AO
Carriage unit with T-slots	N
Total length L_{tot}	620 mm
Total stroke length G_H	1 440 mm

Ordering designation **MTKUSE-25-200-A-ZS/10-AO-N/620-1440**, *Figure 19*

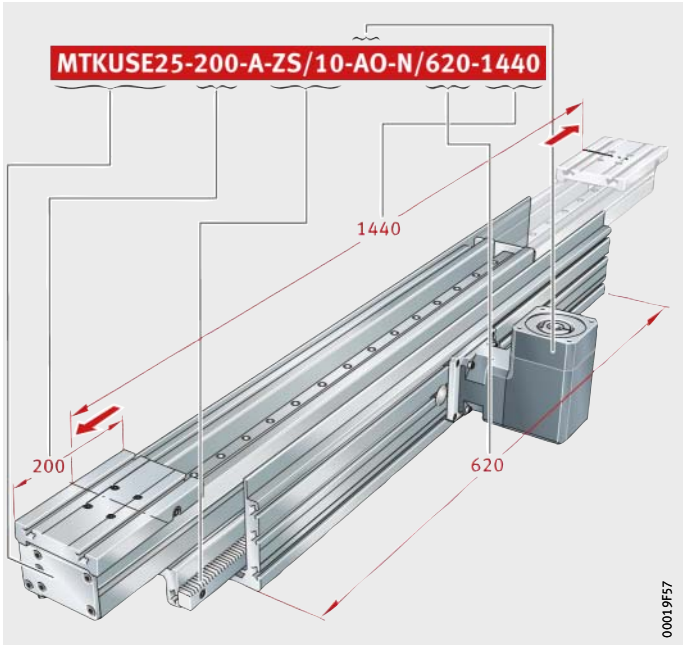

Figure 19
Ordering designation

Telescopic actuator

Six-row linear recirculating ball bearing and guideway assembly
Toothed rack drive
Series MTKUSE..-ZS

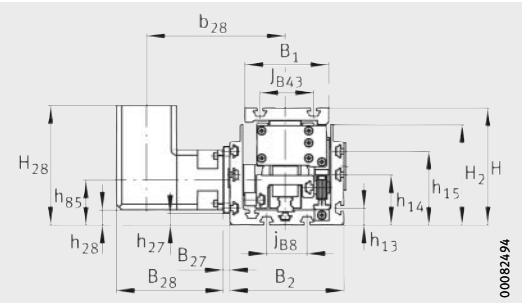

MTKUSE25-200-A-ZS/..-AO-N

Dimension table · Dimensions in mm

Designation	Dimensions					Mounting dimensions								
	B_1	H	L	b_{25}	b_{27}	b_{28}	B_2	B_{27}	B_{28}	d_{25} [1]	D_{85} [2]	D_{86}	D_{87}	D_{88}
MTKUSE25-200-A-ZS/10..-N	125	175	200	160	100	146,5	170	15	89,5	25	14	80	100	115
MTKUSE25-200-A-ZS/20..-N						194			137					

Calculation of lengths L_2, L_{29}, L_{30}, G_H and L_{tot}, see page 534.
T-slots, see page 540.

1) Hole diameter closed off using plugs.
2) With integrated clamping set for motor shaft.

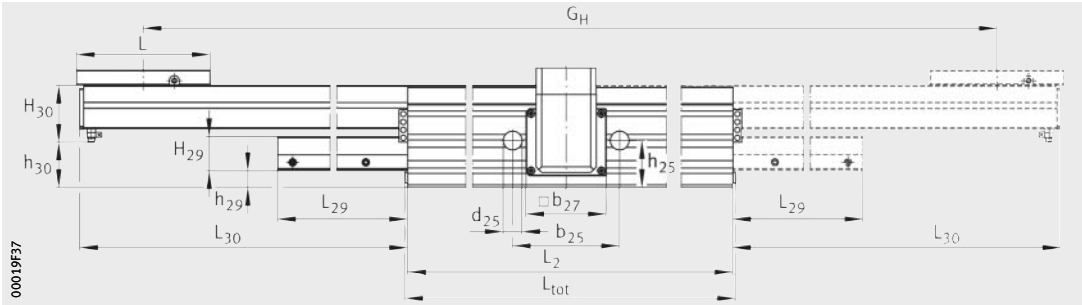

MTKUSE25-200-A-ZS/..-AO-N · Lateral view

G_{87}	j_{B8}	j_{B43}	h_{13}	h_{14}	h_{15}	h_{25}	h_{27}	h_{28}	h_{29}	h_{30}	h_{85}	H_2	H_{28}	H_{29}	H_{30}	H_{74}	l_{89}	t_{87}	T_{86}
M6	60	80	25	75	110	70	17,5	24,5	41	67,5	67,5	150	210,5	51	85	90	10	12	4,4

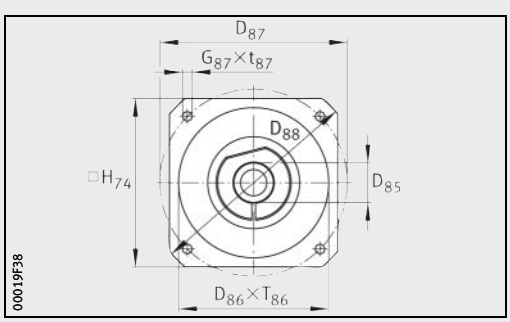

MTKUSE25-200-A-ZS

Telescopic actuator

Six-row linear recirculating ball bearing and guideway assembly
Toothed rack drive

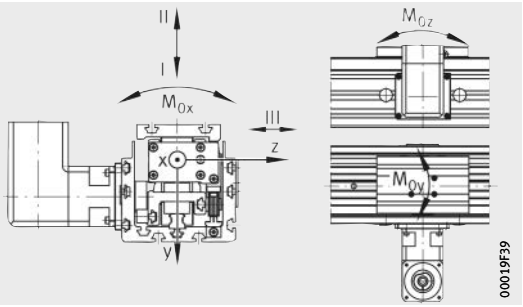

MTKUSE25-200-A-ZS

Performance data

Designation	Combination with motor size	Basic load ratings per carriage unit					
		Load direction I Compressive load		Load direction II Tensile load		Load direction III Lateral load	
		dyn. C N	stat. C_0 N	dyn. C N	stat. C_0 N	dyn. C N	stat. C_0 N
MTKUSE25-200-A-ZS/10..-N	**MOT-SMH82**	35 300	93 700	28 900	59 800	24 700	64 000
MTKUSE25-200-A-ZS/20..-N							

1) Relative to gearbox input.
2) Angled gearbox with clamping set.

Carriage	Drive					Tightening torque of clamping screw[2]	Ratio of angled gearbox i
	Feed per revolution[1]	Maximum drive torque[1]	Toothed rack	Mass moment of inertia			
				Toothed gear	Angled gearbox		
	mm	Nm		kg · cm²	kg · cm²	Nm	
2×KWSE25-HL	39,58	3	Modulus 2	0,45	0,516	4,5	10
1×KWSE25-L	19,79	1,5			0,591		20

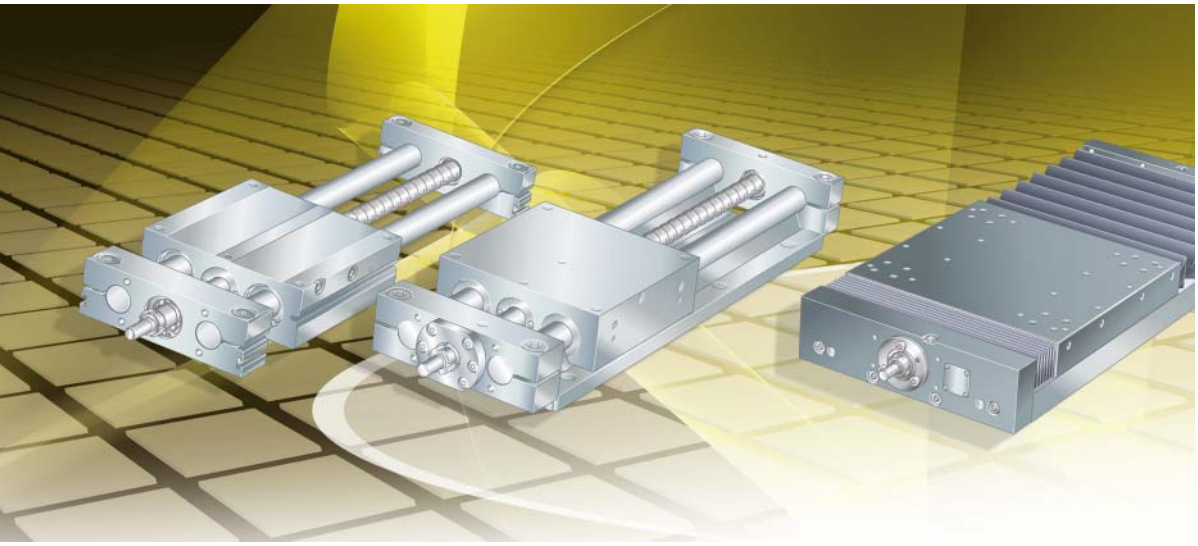

Linear tables

Closed shaft guidance system
Open shaft guidance system
High precision linear tables

Linear tables

In the case of linear tables LTE, the carriage units are guided on two parallel shaft guidance systems with closed linear ball bearings of the machined range. They fulfil moderate accuracy requirements and are suitable for moderate loads and short stroke lengths.

The area of application of linear tables LTE lies mainly in positioning and handling functions with moderate accuracy requirements.

An overview of specific product characteristics for preselection of linear tables with closed shaft guidance system is given on page 554.

In the case of linear tables LTS, the carriage units are guided on two parallel shaft guidance systems with open linear ball bearings of the machined range. They fulfil moderate accuracy requirements and are suitable for moderate loads and long stroke lengths.

The area of application of linear tables LTS lies mainly in positioning and handling functions with moderate accuracy requirements.

An overview of specific product characteristics for preselection of linear tables with open shaft guidance system is given on page 556.

In the case of linear tables LTP and LTPG, however, the carriage unit is supported on two parallel linear recirculating ball bearing and guideway assemblies. They fulfil high accuracy requirements and are suitable for high loads and moments. The linear tables LTP and LTPG are based on a machined and thus high accuracy base plate that should be anchored to a stable machine frame. Based on their rigid design, the area of application of linear tables LTP and LTPG as components lies in peripheral systems for machine tools, handling systems, equipment for joining processes as well as measurement and inspection systems.

An overview of specific product characteristics for preselection of high precision linear tables is given on page 654.

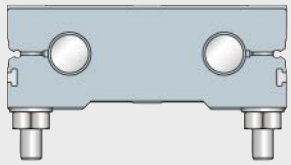

LTE..-A-OA

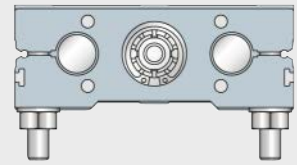

LTE..-A-TGT

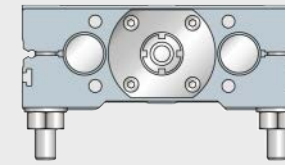

LTE..-A-KGT

LTE..-B-OA

LTE..-B-TGT

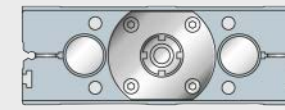

LTE..-B-KGT

00019571

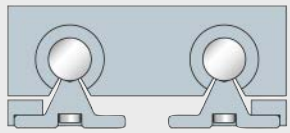

LTS

LTS..-TR

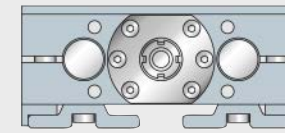

LTS..-KGT

00082441

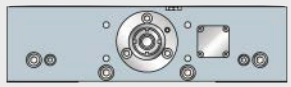

LTP
LTPG

00019573

Linear table	Characteristics					
	Size	Width B_1, B_3 mm	Height H mm	Length of carriage unit L mm	Total length[1)] L_{tot} mm	Load carrying capacity
LTE Without drive	LTE08	65	24	65	1 000	From all directions
	LTE12	85	34	85	1 200	
	LTE16	100	38	100	1 400	
	LTE20	130	48	130	1 800	
	LTE25	160	58	160	2 000	
	LTE30	180	67	180	2 200	
	LTE40	230	84	230	2 500	
	LTE50	280	100	280	2 500	
LTE With trapezoidal screw drive	LTE16	100	38	100	1 400	From all directions
	LTE20	130	48	130	1 800	
	LTE25	160	58	160	2 000	
	LTE30	180	67	180	2 200	
	LTE40	230	84	230	2 500	
	LTE50	280	100	280	2 500	
LTE With ball screw drive	LTE16	100	38	100	1 400	From all directions
	LTE20	130	48	130	1 800	
	LTE25	160	58	160	2 000	
	LTE30	180	67	180	2 200	
	LTE40	230	84	230	2 500	
	LTE50	280	100	280	2 500	

1) Appropriate maximum total length of linear tables LTE taking account of deflection.

2) Maximum axial load $F_{a\,max}$ on spindle bearing arrangement (locating bearing).

Basic load ratings of shaft guidance system		Screw drive		Basic load ratings of nut		Maximum travel velocity	Maximum accel-eration	Repeat accuracy		Operating tempera-ture	Mounting position
dyn. C	stat. C_0	$\varnothing d_0$	P	dyn. C	stat. C_0			Single nut	Double nut, preloaded		
N	N	mm	mm	N	N	m/s	m/s^2	mm	mm	°C	
630	860	Without drive				5	50	–	–	0 to +80	Horizontal and vertical
1 420	1 540										
1 870	2 120										
4 140	4 920										
7 390	8 880										
9 500	11 400										
15 830	17 600										
22 950	25 200										
1 870	2 120	12	3	–	630 2)	0,075	2,5	–	±0,25	0 to +80	Horizontal and vertical
4 140	4 920	16	4		2 250 2)	0,1					
7 390	8 880	16	4								
9 500	11 400	20	4		2 230 2)						
9 500	11 400	20	8			0,2					
15 830	17 600	24	5		2 500 2)	0,125					
15 830	17 600	24	10			0,25					
22 950	25 200	32	6		5 530 2)	0,15					
1 870	2 120	12	4	4 900	6 600	0,3	20	±0,05	–	0 to +80	Horizontal and vertical
			5	4 400	6 800	0,375					
4 140	4 920	16	5	9 300	13 100	0,25	20	±0,05	±0,025	0 to +80	Horizontal and vertical
			10	15 400	26 500	0,75			–		
7 390	8 880	16	5	9 300	13 100	0,25	20	±0,05	±0,025	0 to +80	Horizontal and vertical
			10	15 400	26 000	0,75					
9 500	11 400	20	5	10 500	16 600	0,29	20	±0,05	±0,025	0 to +80	Horizontal and vertical
			10	12 700	22 100	0,5					
			20	11 600	18 400	1,16			–		
			50	13 000	24 600	2,9					
15 830	17 600	25	5	12 300	22 500	0,25	20	±0,05	±0,025	0 to +80	Horizontal and vertical
		32	10	33 400	54 500	0,5					
			20	29 700	59 800	1					
			40	14 900	32 400	2			–		
22 950	25 200	25	5	12 300	22 500	0,25	20	±0,05	±0,025	0 to +80	Horizontal and vertical
		32	10	33 400	54 500	0,5					
			20	29 700	59 800	1					
			40	14 900	32 400	2			–		

Linear table	Characteristics					
	Size	Width B_1, B_3, B_4 mm	Height H mm	Length of carriage unit L mm	Total length without bellows L_{tot} mm	Load carrying capacity
LTS Without drive	LTS12	85	40	85	6 000	From all directions
	LTS16	100	48	100		
	LTS20	130	57	130		
	LTS25	160	66	160		
	LTS30	180	77	180		
	LTS40	230	95	230		
	LTS50	280	115	280		
LTS With trapezoidal screw drive	LTS16	100	48	100	2 900	From all directions
	LTS20	130	57	130		
	LTS25	160	66	160		
	LTS30	180	77	180		
	LTS40	230	95	230		
	LTS50	280	115	280		
LTS With ball screw drive	LTS16	100	48	100	2 900	From all directions
	LTS20	130	57	130	5 850	
	LTS25	160	66	160		
	LTS30	180	77	180		
	LTS40	230	95	230		
	LTS50	280	115	280		

1) Maximum axial load $F_{a\,max}$ on spindle bearing arrangement (locating bearing).

Basic load ratings of shaft guidance system		Screw drive		Basic load ratings of nut		Maximum travel velocity	Maximum accel-eration	Repeat accuracy		Operating tempera-ture	Mounting position
dyn. C	stat. C_0	$\varnothing d_0$	P	dyn. C	stat. C_0			Single nut	Double nut		
N	N	mm	mm	N	N	m/s	m/s²	mm	mm	°C	
1 580	1 780	Without drive				5	20	–		0 to +80	Horizontal and vertical
2 110	2 480										
4 220	5 120										
7 520	9 200										
9 760	12 000										
16 100	18 400										
23 480	26 400										
2 110	2 480	12	3	–	630 [1]	0,075	2,5	–	±0,25	0 to +80	Horizontal and vertical
4 220	5 120	16	4		2 250 [1]	0,1					
7 520	9 200	16	4								
9 760	12 000	20	4		2 530 [1]						
			8			0,2					
16 100	18 400	24	5		2 500 [1]	0,125					
			10			0,25					
23 480	26 400	32	6		5 530 [1]	0,15					
2 110	2 480	12	4	4 900	6 600	0,3	20	±0,05	–	0 to +80	Horizontal and vertical
			5	4 400	6 800	0,25					
4 200	5 120	16	5	9 300	13 100	0,25			±0,025		
			10	15 400	26 500	0,75			–		
7 520	9 200	16	5	9 300	13 100	0,25			±0,025		
			10	15 400	26 500	0,75					
9 760	12 000	20	5	10 500	16 600	0,29			±0,025		
			10	12 700	22 100	0,5					
			20	11 600	18 400	1,16			–		
			50	13 000	24 600	2,9					
16 100	18 400	25	5	12 300	22 500	0,25			±0,025		
		32	10	33 400	54 500	0,5					
			20	29 700	59 800	1					
			40	14 900	32 400	2			–		
23 480	26 400	25	5	12 300	22 500	0,25			±0,025		
		32	10	33 400	54 500	0,5					
			20	29 700	59 800	1					
			40	14 900	32 400	2			–		

Linear table	Characteristics					
	Size	Width B_4 mm	Height H mm	Length of carriage unit L mm	Total length L_{tot} mm	Load carrying capacity
LTP **LTPG** With ball screw drive	LTP15-185 LTPG15-185	185	75	180	3 500	From all directions
	LTP15-275 LTPG15-275	275	75	270	3 500	From all directions
	LTP25-325	325	100	320	3 500	From all directions
	LTPG25-325	325	100	320	3 500	From all directions

Basic load ratings of monorail guidance system		Screw drive		Basic load ratings of nut		Maximum travel velocity	Maximum accel-eration	Repeat accuracy		Operating tempera-ture	Mounting position
dyn. C	stat. C_0	∅ d_0	P	dyn. C	stat. C_0			Single nut	Double nut		
N	N	mm	mm	N	N	m/s	m/s^2	mm	mm	°C	
17 150	36 800	20	5	10 500	16 600	0,29	20	±0,05	±0,025	0 to +80	Horizontal and vertical
			10	12 700	22 100	0,5					
			20	11 600	18 400	1,16			–		
			50	13 000	24 600	2,9					
17 150	36 800	20	5	10 500	16 600	0,29	20	±0,05	±0,025	0 to +80	Horizontal and vertical
			10	12 700	22 100	0,5					
			20	11 600	18 400	1,16			–		
			50	13 000	24 600	2,9					
47 200	83 600	32	5	21 500	49 300	0,215	20	±0,05	±0,025	0 to +80	Horizontal and vertical
			10	33 400	54 500	0,43					
			20	29 700	59 800	0,86					
			40	14 900	32 400	1,73			–		
73 900	268 000	32	5	21 500	49 300	0,215	20	±0,05	±0,025	0 to +80	Horizontal and vertical
			10	33 400	54 500	0,43					
			20	29 700	59 800	0,86					
			40	14 900	32 400	1,73			–		

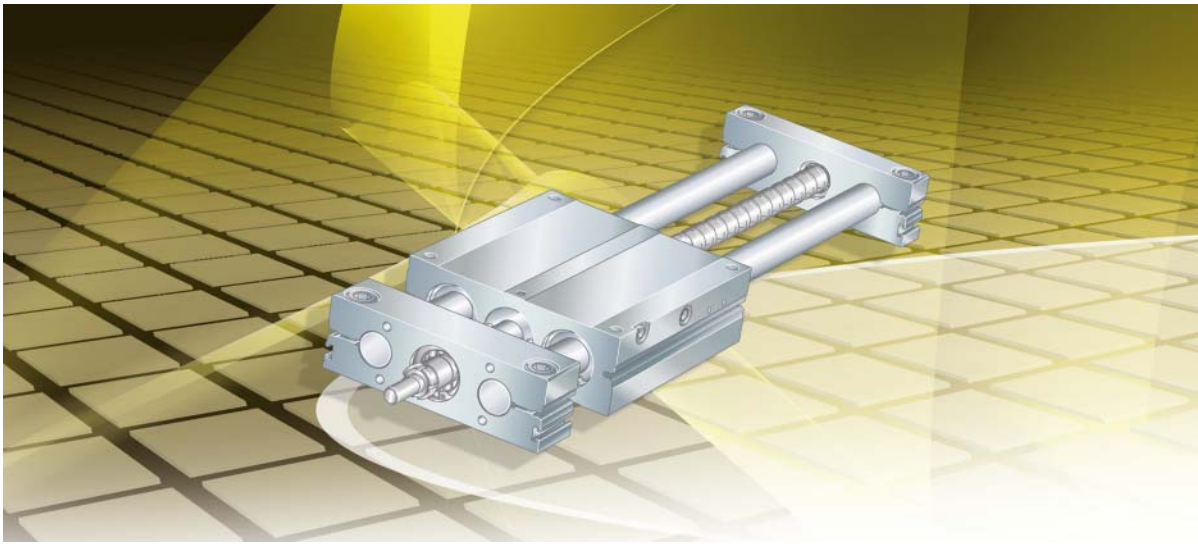

Linear tables
with closed shaft guidance system

Linear tables
with closed shaft guidance system

Linear tables with closed shaft guidance system

Without drive

LTE..-A-OA, LTE..-B-OA

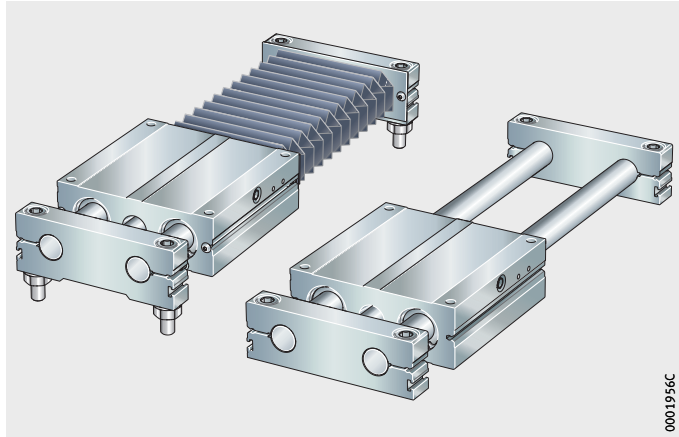

With trapezoidal screw drive

LTE..-A-TGT, LTE..-B-TGT

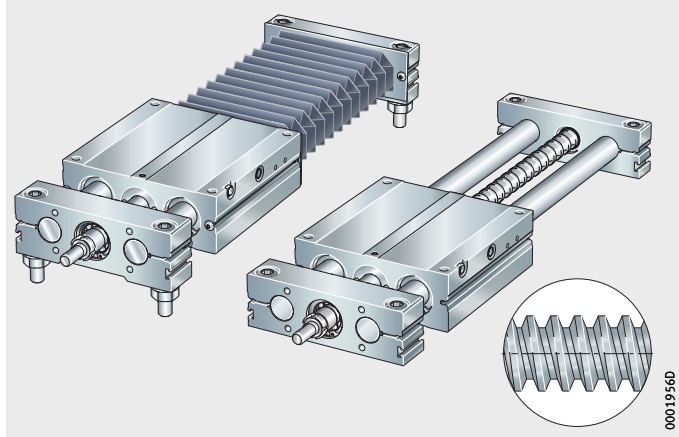

With ball screw drive

LTE..-A-KGT, LTE..-B-KGT

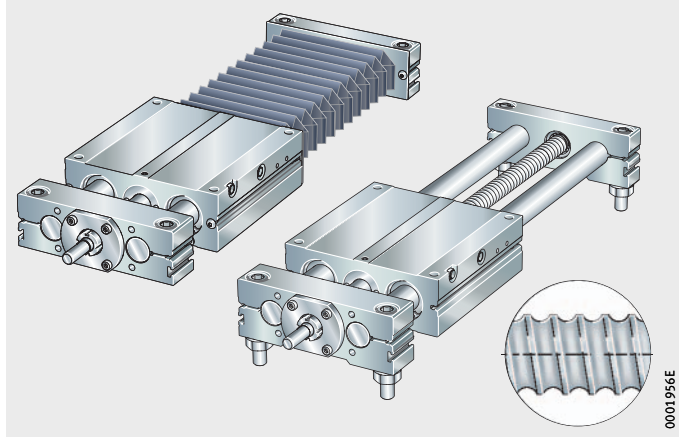

Linear tables
with closed shaft guidance system

Features

Linear tables LTE are linear units for positioning, handling and machining tasks. They are suitable for moderate loads and short stroke lengths.

Basic design

The basic design of linear tables LTE has no drive and comprises:

- a carriage unit made from aluminium alloy with four linear ball bearings KB and one lubrication nipple on each side of the carriage unit
- two hardened and ground shafts made from high alloy steel
- two shaft support blocks

  design A: movable carriage unit

  design B: stationary carriage unit.

Linear tables LTE are supplied already assembled.

The linear ball bearings have an initial greasing, are sealed and can be relubricated.

With trapezoidal screw drive

Linear tables LTE with trapezoidal screw drive comprise the basic design plus the following additional components:

- a rolled trapezoidal screw spindle with a cylindrical bronze nut
- on the drive side: a locating bearing in a shaft support block; depending on the table size, the locating bearing comprises one double row angular contact ball bearing or two single row angular contact ball bearings
- on the opposite side: a non-locating bearing in a shaft support block; the non-locating bearing comprises one single row ball bearing.

The spindle support bearings are sealed and lubricated for life. The spindle nut has an initial greasing, is sealed and can be relubricated via a lubrication nipple in the carriage unit.

With ball screw drive

Linear tables LTE with ball screw drive comprise the basic design plus the following additional components:

- a rolled ball screw spindle with a cylindrical single nut M. In the case of some pitch values, preloaded double nuts MM are also possible.
- on the drive side: a locating bearing in a shaft support block; the locating bearing comprises a preloaded double row angular contact ball bearing ZKLN and a lubrication nipple.
- on the opposite side: a non-locating bearing in a shaft support block; the non-locating bearing comprises a needle roller bearing NA and a lubrication nipple.

The spindle support bearings and spindle nuts have an initial greasing, are sealed and can be relubricated. The spindle nuts can be relubricated via a lubrication nipple in the carriage unit.

With bellows

Linear tables LTE can be equipped with two sets of bellows, with the following exceptions: LTE8 and LTE12. The bellows are attached by means of Velcro tape, with the exception of LTE20: In this case, the bellows are mounted using screws.

For the same stroke length, the total length of a linear table with bellows is greater than the total length of a linear table without bellows.

Screw drive

The spindle thread has a pitch value of between 3 mm and 50 mm, see table.

As standard, single nuts with an axial clearance dependent on the pitch are used. In the case of some pitch values, the ball screw drive can be supplied with preloaded double nuts.

Screw drive variants

Screw drive variants		Trapezoidal screw drive	Ball screw drive	Suffix
Pitch	3 mm	●	–	3
	4 mm	●	●	4
	5 mm	●	●	5
	6 mm	●	–	6
	8 mm	●	–	8
	10 mm	●	●	10
	20 mm	–	●	20
	40 mm	–	●	40
	50 mm	–	●	50
Single nut (cylindrical)		●	●	M
Double nut (cylindrical)		–	●	MM
Without drive (no spindle), with bellows		–	–	OA

Drive elements

For linear tables, Schaeffler also supplies couplings, coupling housings, planetary gearboxes and servo motors, *Figure 1*.
The range is supplemented by servo controllers for effective drive and control of the motors.

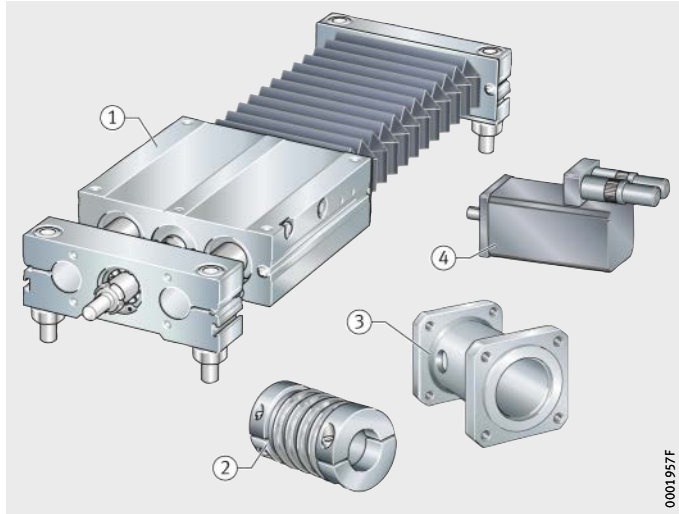

Example:
LTE
① Linear table LTE20-A
② Coupling KUP
③ Coupling housing KGEH
④ Servo motor MOT

Figure 1
Linear table
with closed shaft guidance system

Proven drive combinations

The combination of the necessary drive components for vertical and horizontal applications as a function of the mass to be moved, the acceleration and the travel velocity of carriage units is shown on page 681.

For vertical mounting, motors with a holding brake must be used.

If different loading and kinematic criteria apply, calculation should be based on the least favourable operating conditions. This applies to calculation of the drive motor and design of the gearbox, coupling and servo controller.

Special designs

Special designs are available by agreement. Examples of these are linear tables LTE with

- guidance shafts and spindles with anti-corrosion protection and a Permaglide guidance system
- bellows resistant to welding beads
- a rolled ball screw spindle to accuracy class 25 µm/300 mm
- a trapezoidal screw drive with a left hand thread
- inductive limit switches
- special machining.

Linear tables
with closed shaft guidance system

Design and safety guidelines

Load carrying capacity and load safety factor

The load carrying capacities and load safety factors to be observed differ as a function of the mounting position, see section Technical principles, page 12 and Product preselection matrix, page 554.

Preload and rigidity

A preloaded linear guidance system increases the rigidity of a machine system. However, preload also influences the displacement resistance and operating life of the linear guidance system.

Linear tables LTE with linear ball bearings cannot, due to their construction, be regarded as preloaded. Individually, each linear ball bearing has operating clearance on the guidance shaft.
The operating clearance of the individual linear ball bearings is substantially eliminated and is no longer relevant in practical terms. This is due to the compact, rigid carriage unit and the positional tolerances of the locating bore for the linear ball bearings relative to each other.

Main load direction of linear tables with linear ball bearings

The effective load rating of a linear ball bearing is dependent on the position of the load direction in relation to the position of the ball rows.

In the case of linear tables LTE, the linear ball bearings are not fitted in a specific alignment, so the basic load rating data C and C_0 give the minimum values, see dimension tables.
The corresponds to a ball row in the linear ball bearing in an apex position relative to the load direction.

C_{min}, $C_{0\,min}$ = minimum basic load rating in main load direction

C_{max}, $C_{0\,max}$ = maximum basic load rating in main load direction

① Apex position

② Symmetrical position

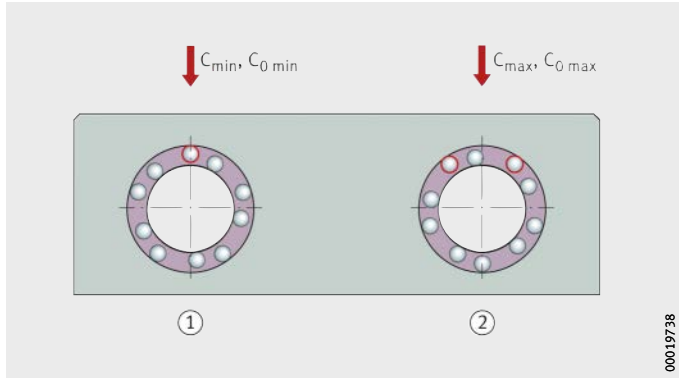

Figure 2
Load carrying capacity, dependent on the position of the ball rows

Deflection

The deflection of linear tables is essentially dependent on the support spacing, the rigidity of the shaft, the adjacent construction and the bearing arrangement. As the rigidity of these components increases, the deflection of the actuators is reduced.

The deflection restricts the effective length of a linear table with a movable carriage unit, design A, or the load carrying capacity.

Diagrams

The diagram values are determined for a bearing arrangement or clamping which is in theory infinitely rigid and are subdivided into locating/non-locating and locating/locating bearing arrangements, starting *Figure 3*, page 568. The influence of spindles in driven linear tables LTE has not been taken into consideration here.

The deflection of the support rail is valid under the following conditions:

- central position of the carriage unit
- vertical load
- horizontal mounting position of the linear table.

Due to shaft deflection, the rolling element rows adopt an apex position relative to the outside diameter of the machined linear ball bearing, but this should not be regarded as critical in the load ranges displayed in each case.

The running quality and operating life of the linear ball bearings are not substantially influenced by the guidance system concept “two shafts each with two linear ball bearings” of the linear tables LTE.

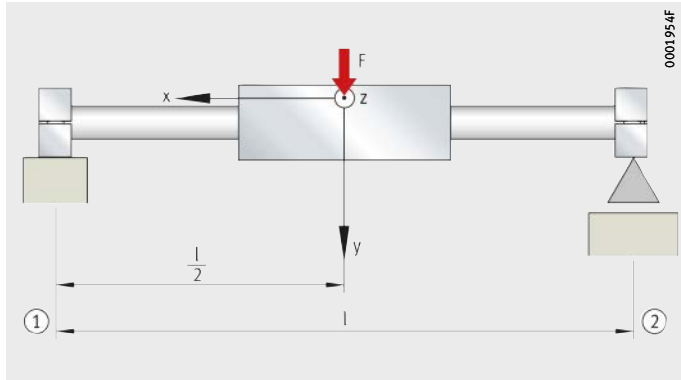

① Locating bearing arrangement
② Non-locating bearing arrangement

Figure 3
Deflection about the z axis

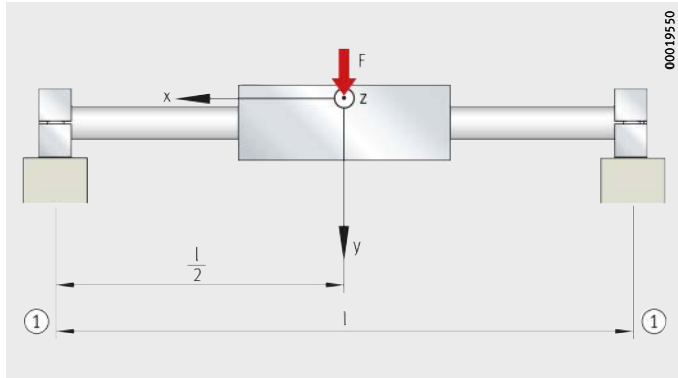

① Locating bearing arrangement

Figure 4
Deflection about the z axis

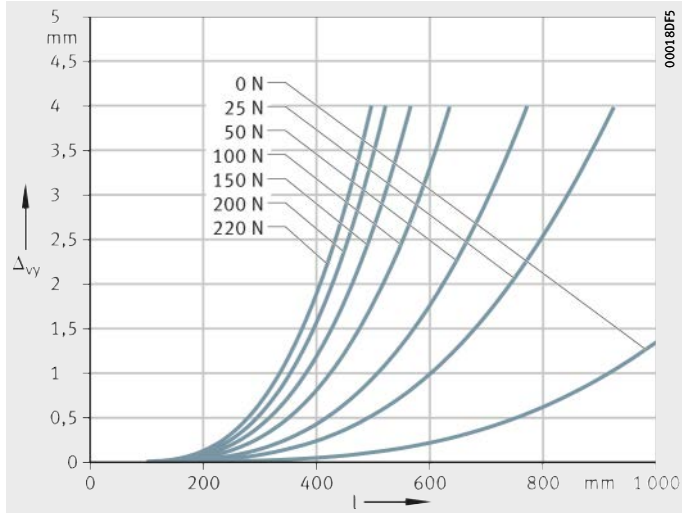

LTE08

Locating/non-locating bearing arrangement
Δ_{vy} = deflection
l = support spacing

Figure 5
Deflection about the z axis

LTE08

Locating/locating bearing arrangement
Δ_{vy} = deflection
l = support spacing

Figure 6
Deflection about the z axis

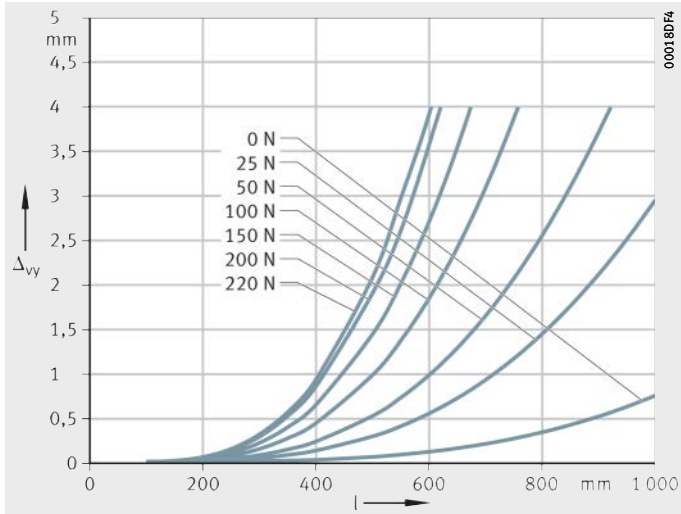

LTE12

Locating/non-locating bearing arrangement
Δ_{vy} = deflection
l = support spacing

Figure 7
Deflection about the z axis

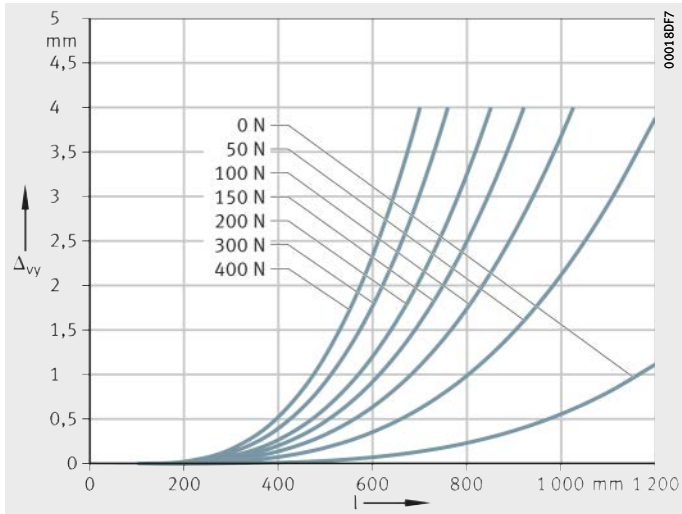

LTE12

Locating/locating bearing arrangement
Δ_{vy} = deflection
l = support spacing

Figure 8
Deflection about the z axis

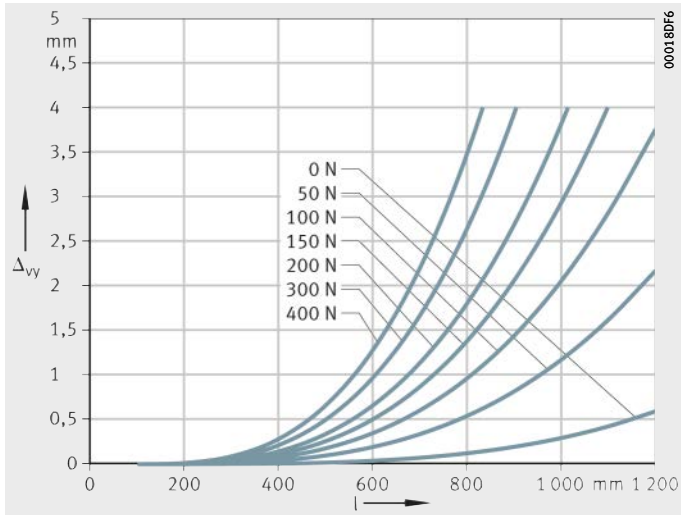

LTE16

Locating/non-locating bearing arrangement
Δ_{vy} = deflection
l = support spacing

Figure 9
Deflection about the z axis

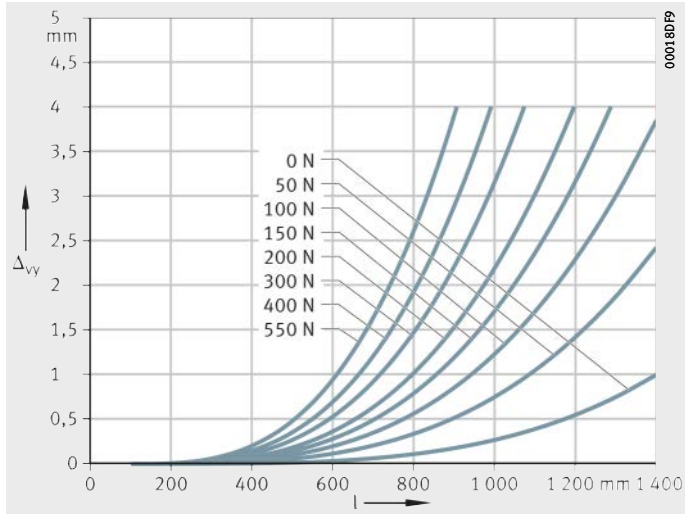

LTE16

Locating/locating bearing arrangement
Δ_{vy} = deflection
l = support spacing

Figure 10
Deflection about the z axis

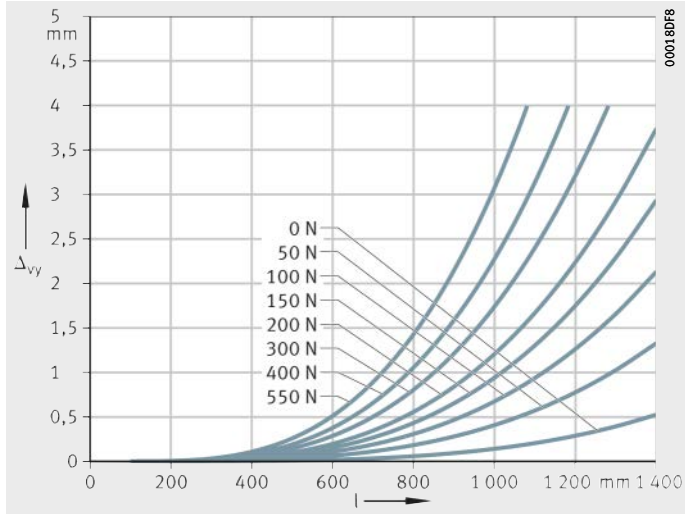

LTE20

Locating/non-locating bearing arrangement
Δ_{vy} = deflection
l = support spacing

Figure 11
Deflection about the z axis

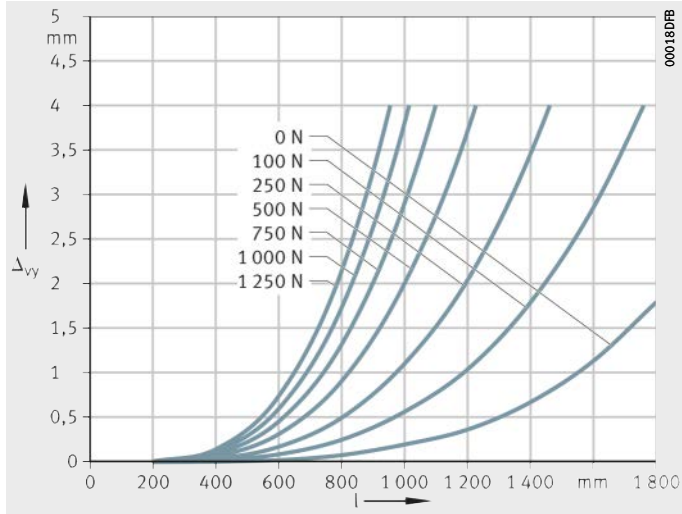

LTE20

Locating/locating bearing arrangement
Δ_{vy} = deflection
l = support spacing

Figure 12
Deflection about the z axis

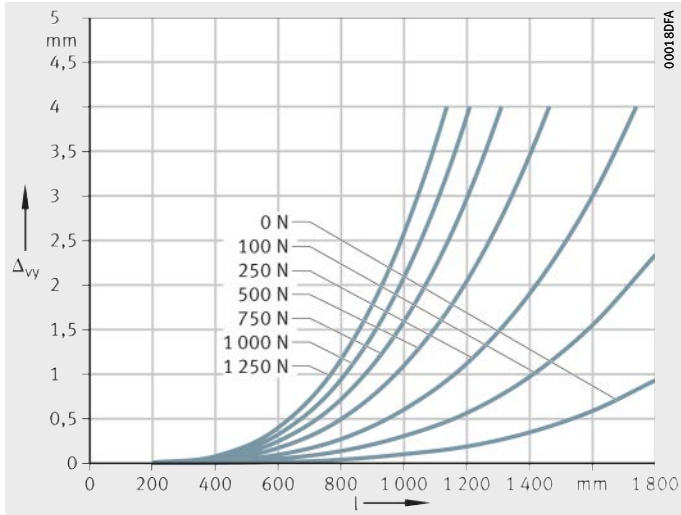

LTE25

Locating/non-locating bearing arrangement
Δ_{vy} = deflection
l = support spacing

Figure 13
Deflection about the z axis

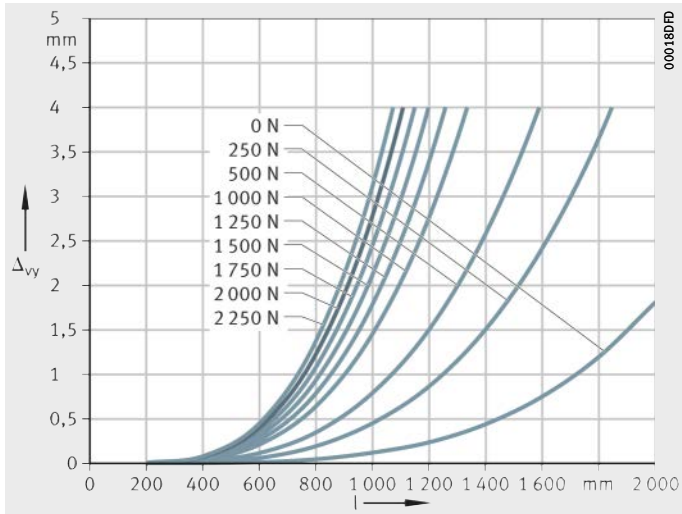

LTE25

Locating/locating bearing arrangement
Δ_{vy} = deflection
l = support spacing

Figure 14
Deflection about the z axis

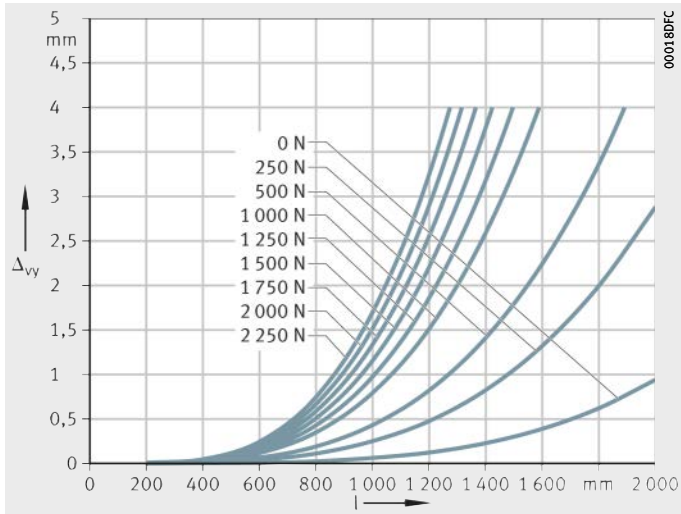

LTE30

Locating/non-locating bearing arrangement
Δ_{vy} = deflection
l = support spacing

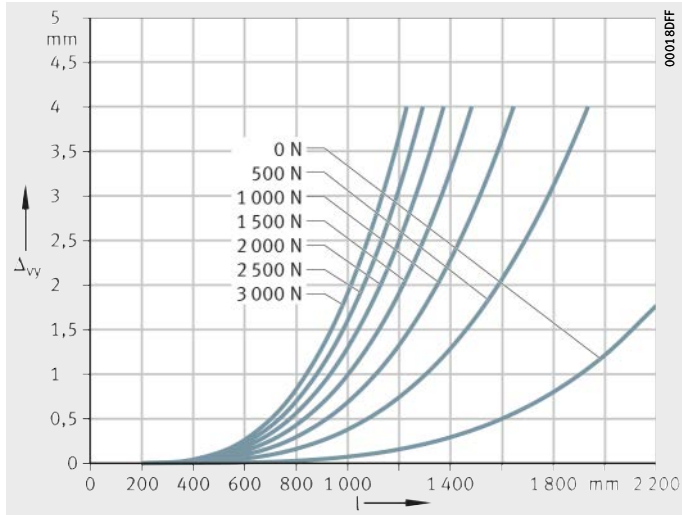

Figure 15
Deflection about the z axis

LTE30

Locating/locating bearing arrangement
Δ_{vy} = deflection
l = support spacing

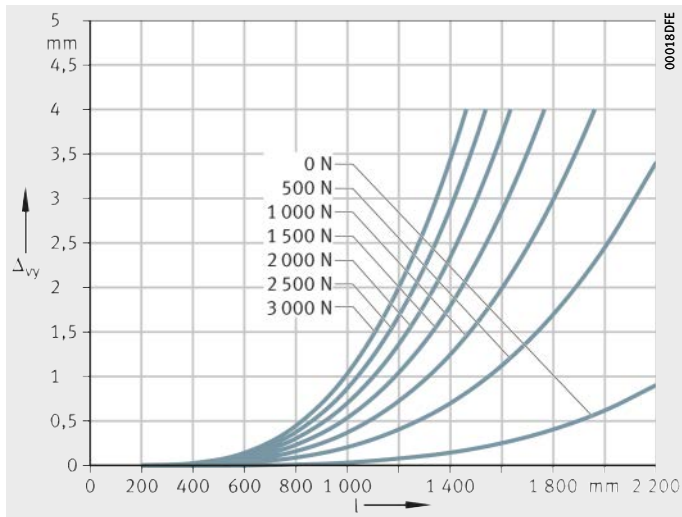

Figure 16
Deflection about the z axis

LTE40

Locating/non-locating bearing arrangement
Δ_{vy} = deflection
l = support spacing

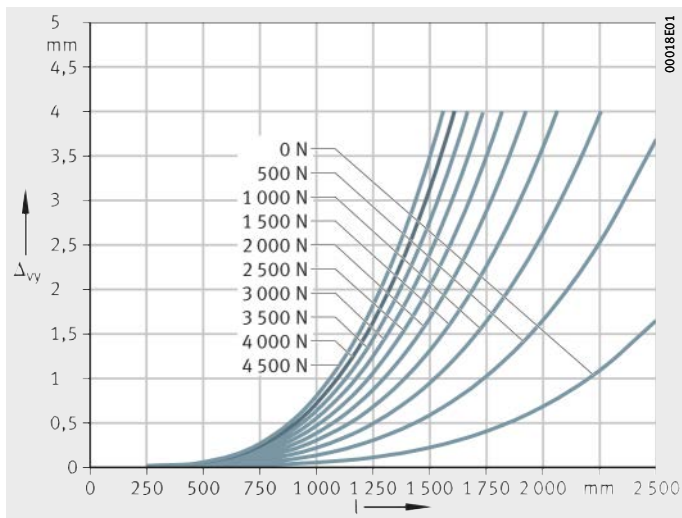

Figure 17
Deflection about the z axis

LTE40

Locating/locating bearing arrangement
Δ_{vy} = deflection
l = support spacing

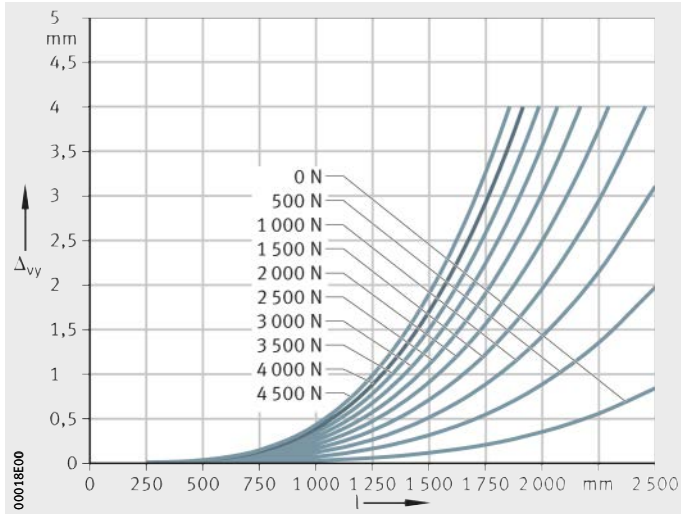

Figure 18
Deflection about the z axis

LTE50

Locating/non-locating bearing arrangement
Δ_{vy} = deflection
l = support spacing

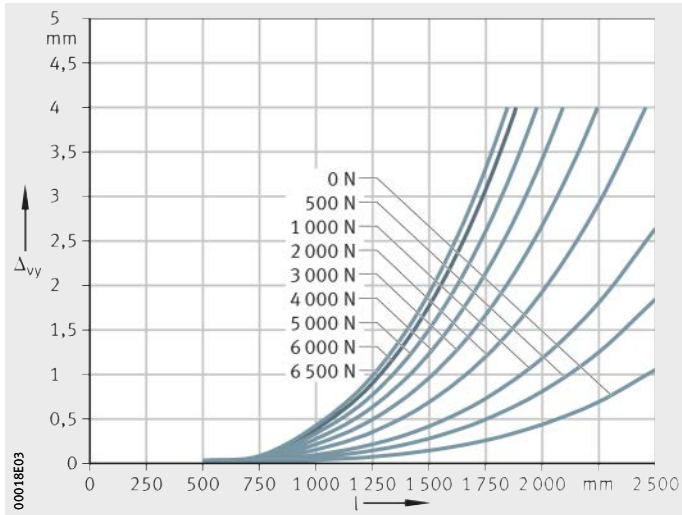

Figure 19
Deflection about the z axis

LTE50

Locating/locating bearing arrangement
Δ_{vy} = deflection
l = support spacing

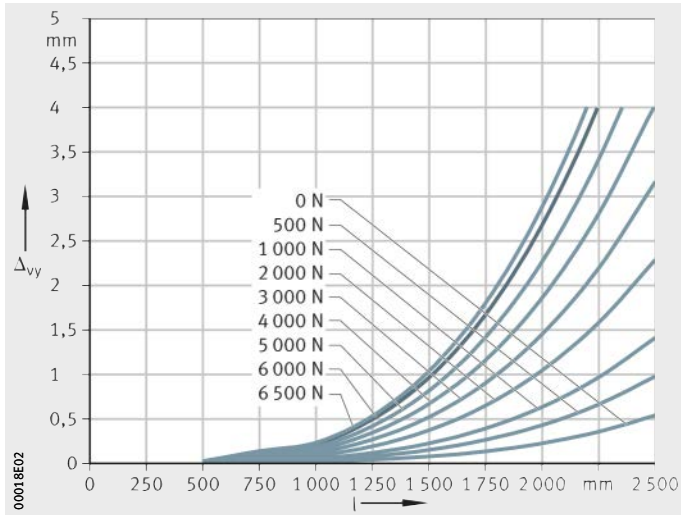

Figure 20
Deflection about the z axis

Linear tables
with closed shaft guidance system

Length calculation of linear tables

The length calculation of linear tables is based on the required effective stroke length N_H. The effective stroke length N_H must be increased by the addition of safety spacing values on both sides of the travel distance. It is only if bellows are present that the effective length B_L must be added.

The total length L_{tot} of the linear table is determined from the effective stroke length N_H, the safety spacings S, the carriage unit length L and the lengths of the end plates L_3, L_4 and L_5.

Parameters for length calculation

G_H mm
Total stroke length

N_H mm
Effective stroke length

S mm
Safety spacing, see table, page 576

L mm
Length of carriage plate

L_3 mm
Length of end plates in LTE..-A-OA, LTE..-B-OA

L_4 mm
Length of end plate in LTE..-TR, LTE..-TGT, LTE..-KGT

L_5 mm
Length of end plate in LTE..-TR, LTE..-TGT, LTE..-KGT

L_{tot} mm
Total length of linear table

F_{BL} –
Effective length factor according to linear table type

B_L mm
Effective length of bellows

B_B mm
Length of bellows fastener.

Total stroke length G_H

The total stroke length G_H is determined from the required effective stroke length N_H and the safety spacings S, which must correspond to at least the spindle pitch P.

$$G_H = N_H + 2 \cdot S$$

Maximum lengths of linear tables

The maximum length of linear tables LTE is determined taking account of the deflection, see table.

Maximum lengths

Designation	L_{tot} mm	Designation	L_{tot} mm	Designation	L_{tot} mm
LTE08	1 000	–	–		–
LTE12	1 200	–	–		–
LTE16	1 400	LTE16..-TR	1 400	LTE16..-KGT	1 400
LTE20	1 800	LTE20..-TGT	1 800	LTE20..-KGT	1 800
LTE25	2 000	LTE25..-TR	2 000	LTE25..-KGT	2 000
LTE30	2 200	LTE30..-TR	2 200	LTE30..-KGT	2 200
LTE40	2 500	LTE40..-TR	2 500	LTE40..-KGT	2 500
LTE50	2 500	LTE50..-TR	2 500	LTE50..-KGT	2 500

Total length L_{tot}

The following equations are designed for one linear table.
The parameters and their position can be found in *Figure 21* and *Figure 22* as well as in the table, page 576.

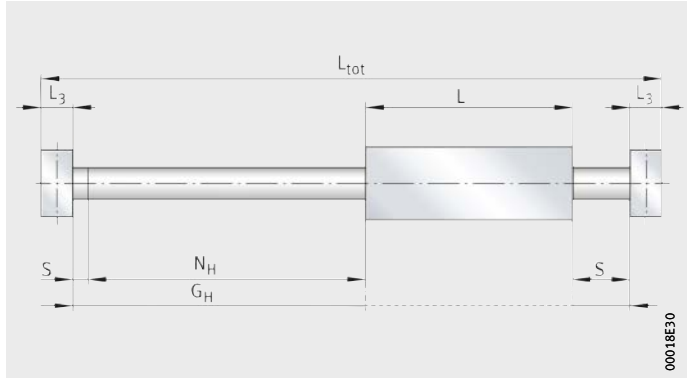

Figure 21
Length parameters
for linear tables LTE..-A and LTE..-B

Linear table without bellows, without drive
LTE..-A, LTE..-B

$$L_{tot} = G_H + L + 2 \cdot L_3$$

Linear table with bellows, without drive
LTE..-A, LTE..-B

$$L_{tot} = G_H \cdot F_{BL} + L + 2 \cdot L_3 + B_B$$

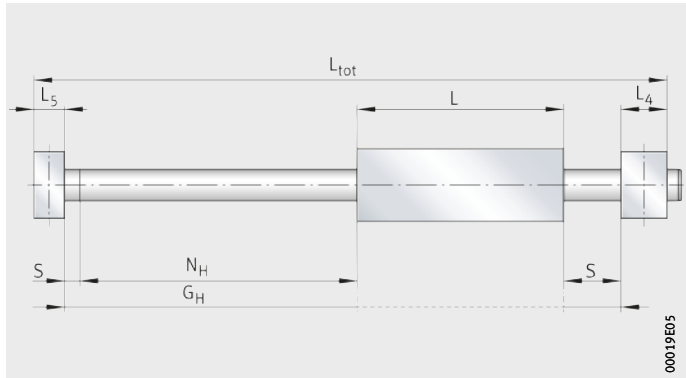

Figure 22
Length parameters
for linear tables LTE..-TR, LTE..-TGT and LTE..-KGT

Linear table without bellows
LTE..-TR, LTE..-TGT, LTE..-KGT

$$L_{tot} = G_H + L + L_4 + L_5$$

Linear table with bellows
LTE..-TR, LTE..-TGT, LTE..-KGT

$$L_{tot} = G_H \cdot F_{BL} + L + L_4 + L_5 + B_B$$

Length parameters
Valid for design A and design B

Designation	L mm	L_3 mm	L_4 mm	L_5 mm	S mm	F_{BL}	B_B
LTE08-65	65	12	–	–	Dependent on application	–	–
LTE12-85	85	14					
LTE16-100	100	18				1,5	20
LTE20-130..-OA	130	20				1,33	20
LTE25-160	160	25				1,34	21
LTE30-180	180	25				1,27	21
LTE40-230	230	30				1,28	22
LTE50-280	280	30				1,24	22
LTE16-100..-TR12×3	100	–	24	18	3	1,5	20
LTE20-130..-TGT16×4	130		29	20	4	1,33	20
LTE25-160..-TR16×4	160		33	25	4	1,34	21
LTE30-180..-TR20×4	180		38	25	4	1,27	21
LTE30-180..-TR20×8	180		38	25	8	1,27	21
LTE40-230..-TR24×5	230		39	30	5	1,28	22
LTE40-230..-TR24×10	230		39	30	10	1,28	22
LTE50-280..-TR32×6	280		42	30	6	1,24	22
LTE16-100..-1204	100		24	18	4	1,5	20
LTE16-100..-1205	100		24	18	5	1,5	20
LTE20-130..-KGT/5	130		29	20	5	1,33	20
LTE20-130..-KGT/10	130		29	20	10	1,33	20
LTE25-160..-1605	160		33	25	5	1,34	21
LTE25-160..-1610	160		33	25	10	1,34	21
LTE30-180..-2005	180		38	25	5	1,27	21
LTE30-180..-2010	180		38	25	10	1,27	21
LTE30-180..-2020	180		38	25	20	1,27	21
LTE30-180..-2050	180		38	25	50	1,27	21
LTE40-230..-2505	230		39	30	5	1,28	22
LTE40-230..-3210	230		42	30	10	1,28	22
LTE40-230..-3220	230		42	30	20	1,28	22
LTE40-230..-3240	230		42	30	40	1,28	22
LTE50-280..-2505	280		39	30	5	1,24	22
LTE50-280..-3210	280		42	30	10	1,24	22
LTE50-280..-3220	280		42	30	20	1,24	22
LTE50-280..-3240	280		42	30	40	1,24	22

Effective length of bellows

The effective length of bellows is the length occupied by the bellows in the fully compressed state. Calculation is based on the total stroke length G_H, *Figure 23*, equation and table, page 576.

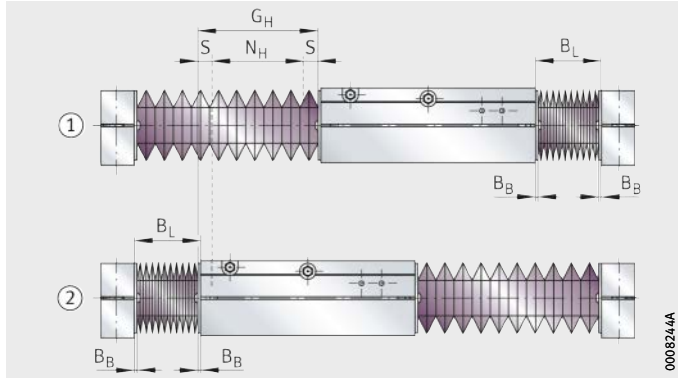

① Carriage unit against the right end stop
② Carriage unit against the left end stop

Figure 23
Effective length calculation

$$B_L = \frac{G_H \cdot (F_{BL} - 1) + B_B}{2}$$

B_L mm
Effective length of bellows

G_H mm
Total stroke length

F_{BL} –
Effective length factor according to linear table type, see table, page 576

B_B mm
Length of bellows fastener.

Mass calculation

The total mass of a linear table is calculated from the mass of the table without a carriage unit and the carriage unit.

$$m_{tot} = m_{LAW} + m_{BOL}$$

Values for mass calculation, linear table without screw drive

Designation	Mass	
	Carriage unit m_{LAW} ≈kg	Actuator without carriage unit m_{BOL} ≈kg
LTE08..-A, LTE08..-B	0,24	L_{tot} · 0,000 8 + 0,35
LTE12..-A, LTE12..-B	0,63	L_{tot} · 0,001 8 + 0,86
LTE16..-A, LTE16..-B	0,9	L_{tot} · 0,003 1 + 1,3
LTE20..-A-OA, LTE20..-B-OA	1,8	L_{tot} · 0,004 9 + 2,5
LTE25..-A, LTE25..-B	3,5	L_{tot} · 0,007 7 + 4,9
LTE30..-A, LTE30..-B	5,1	L_{tot} · 0,011 0 + 6,8
LTE40..-A, LTE40..-B	10,3	L_{tot} · 0,019 6 + 13,4
LTE50..-A, LTE50..-B	16,4	L_{tot} · 0,030 6 + 20,6

Values for mass calculation, linear table with screw drive

Designation	Mass	
	Carriage unit[1)] m_{LAW} ≈kg	Actuator without carriage unit m_{BOL} ≈kg
LTE16..-A, LTE16..-B	0,86	L_{tot} · 0,003 9 + 0,4
LTE20..-A, LTE20..-B	1,82	L_{tot} · 0,006 2 + 0,8
LTE25..-A, LTE25..-B	3,49	L_{tot} · 0,009 0 + 1,4
LTE30..-A, LTE30..-B	5,04	L_{tot} · 0,013 1 + 1,9
LTE40..-A-25, LTE40..-B-25	4,3	L_{tot} · 0,022 9 + 2,8
LTE40..-A-32, LTE40..-B-32	10,6	L_{tot} · 0,025 3 + 3,4
LTE50..-A-25, LTE50..-B-25	4,3	L_{tot} · 0,033 9 + 2,8
LTE50..-A-32, LTE50..-B-32	16,5	L_{tot} · 0,036 3 + 4,7

1) Including single or preloaded double nut.

Lubrication

The guidance systems and the trapezoidal or ball screw drive in linear tables are initially greased with a high quality lithium complex soap grease KP2P-30 according to DIN 51825 and must be relubricated during operation.

Structure of suitable greases

The following greases are suitable for the linear ball bearings and the linear recirculating ball bearing and guideway assemblies as well as the screw drives:

- lithium soap or lithium complex soap grease with base oil having a mineral oil base
- special anti-wear additives for loads $C/P < 8$, indicated by “P” in the DIN designation
- base oil viscosity ISO VG 68 to ISO VG 100 in the case of linear recirculating ball bearing and guideway assemblies
- consistency in accordance with NLGI grade 2 in the case of linear ball bearings.

If different greases are used, their miscibility and compatibility must be checked first.

Relubrication intervals

The relubrication intervals are essentially dependent on the following factors:

- the travel velocity of the carriage unit
- the load
- the operating temperature
- the stroke length
- the environmental conditions and environmental influences
- the mounting position.

The cleaner the environment, the lower the lubricant consumption.

Calculation of the relubrication interval

The relubrication interval and relubrication quantity can only be precisely determined under actual operating conditions since it is not possible to calculate all the influencing factors.
If the relubrication quantity cannot be determined under operating conditions, the guide values in the table should be used.
The locating and non-locating bearing in the trapezoidal screw drive are lubricated for life.

Relubrication quantities per lubrication nipple

Designation	Linear ball bearing	d_0	P	Trapezoidal screw drive			Ball screw drive		
				Threaded nut	Locating bearing	Non-locating bearing	Threaded nut	Locating bearing	Non-locating bearing
	≈ g	mm	mm	≈ g			≈ g		
LTE08	0,2	–	–	–	–	–	–	–	–
LTE12	0,5								
LTE16	0,8	12	3	2	Lubricated for life		–	Lubricated for life[1]	
			4	–			0,2		
LTE20	1	16	4	3,5			–		
			5	–			0,5		
			10	–			1,3		
LTE25	2,5	16	4	3,5			–		
			5	–			0,5		
			10	–			1,3		
LTE30	3,1	20	4	6			–		
			5	–			0,6		
			10	–			3,1		
			20	–			3		
			50	–			8,6		
LTE40	5,8	24	5	10			–		
		25	5	–			0,8		
		32	10	–			3,1		
			20	–			6,8		
			40	–			9,5		
LTE50	13	25	5	–			0,8		
LTE50	13	32	6	15			–		
			10	–			3,1		
			20	–			6,8		
			40	–			9,5		

[1] If relubrication is required due to the application, please consult us.

In the case of linear tables LTE with linear ball bearings, experience shows that the initial greasing is sufficient if the following apply: normal environmental conditions, load ratio $C/P > 10$, room temperature and $v \leqq 0{,}6\ v_{max}$. If it is not possible to achieve these conditions, relubrication must be carried out.

For the trapezoidal and ball screw drive, a relubrication interval of 200 h to 300 h is sufficient under normal operating conditions. Relubrication must be carried out, irrespective of the result of this calculation, no more than 1 year after the last lubrication.

Fretting corrosion is caused by lubricant starvation and is visible as a reddish discolouration of the rolling element raceways. Lubricant starvation can lead to permanent damage to the system and therefore to its failure. It must be ensured that the lubrication intervals are reduced accordingly in order to prevent fretting corrosion.

When calculating the relubrication interval, the grease operating life must also be checked. This is restricted to a maximum of 3 years due to the ageing resistance of the grease. It is the user's responsibility to consult the lubricant manufacturer.

Relubrication procedure

Relubrication should be carried out whilst the carriage unit is moving and warm from operation over a minimum stroke length corresponding to one carriage unit length.

During lubrication, it must be ensured that the grease gun, lubrication nipple, environment of the lubrication nipple and the grease are clean.

Relubrication should be carried out wherever possible with several partial quantities at various times instead of the complete quantity at the time of the relubrication interval. Relubrication quantities, see table.

The lubrication method involves loss of lubricant. The used lubricant must be collected and disposed of by methods that help to protect the environment.

The use of lubricants is governed by national regulations for environmental protection and occupational safety as well as information from the lubricant manufacturers.
These regulations must be observed in all cases.

Lubrication nipples

Linear tables LTE (excluding size LTE20) are relubricated via drive fit lubrication nipples NIP A, while linear tables LTE20 are relubricated via funnel type lubrication nipples NIP to DIN 3405, *Figure 24*.

NIP A
NIP DIN 3405-A M6

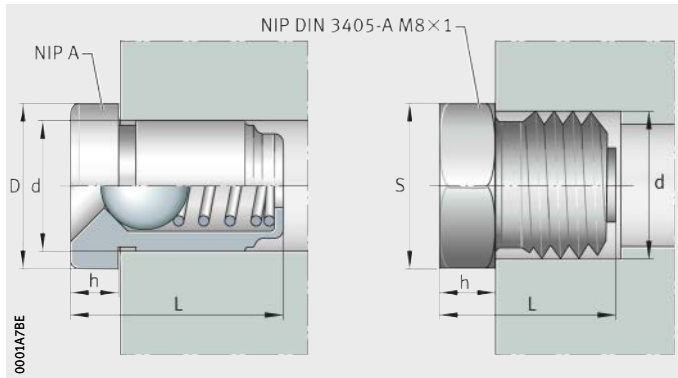

Figure 24
Drive fit lubrication nipple and funnel type lubrication nipple

Lubrication nipples for LTE and LTS excluding LTE20

Drive fit lubrication nipple	D mm	d mm	L mm	h mm
NIP A1	6	4	6	1,5
NIP A2	8	6	9	2
NIP A3	10	9	12	3

Funnel type lubrication nipple for LTE20

Funnel type lubrication nipple	S h13 mm	d mm	L mm	h j6 mm
NIP DIN 3405-A M6	7	M6	9,5	3

Relubrication points

The linear ball bearings are greased in pairs in each case via a lateral lubrication nipple in the carriage unit. Each spindle nut is supplied with lubricant via a separate lubrication nipple. The spindle bearing arrangement of the ball screw drive in the shaft support blocks is supplied in each case from above via a lubrication nipple, *Figure 25*. Exception: In the case of the actuator LTE20, the spindle bearings fitted are sealed and lubricated for life.

LTE

① Relubrication point for non-locating bearing

② Relubrication point for locating bearing

③ Relubrication points for linear ball bearings

④ Relubrication point for spindle nut

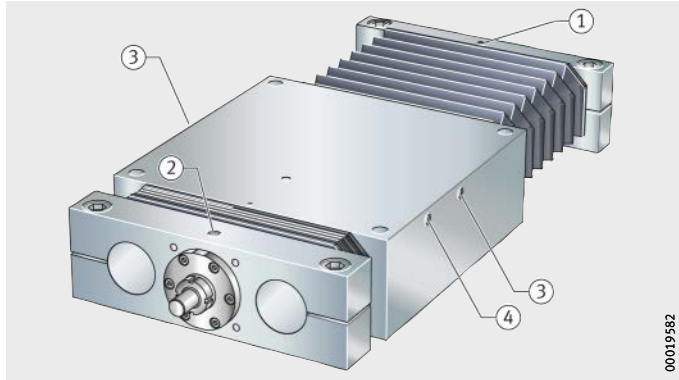

Figure 25
Lubrication points on linear table

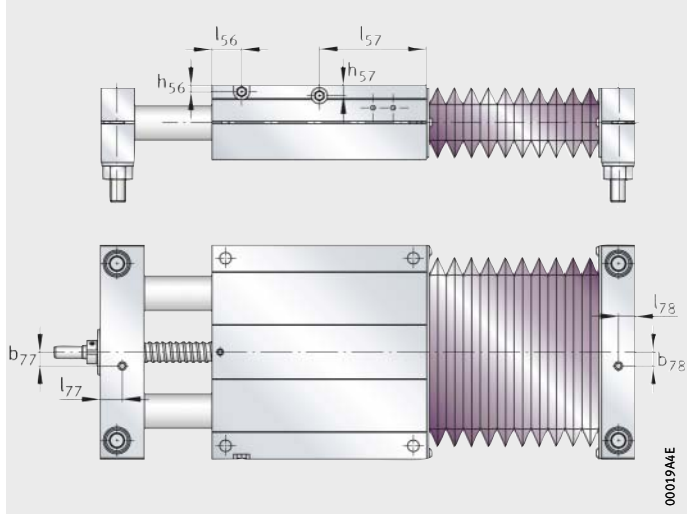

Figure 26
Position of relubrication points, linear tables LTE

Position of relubrication points

Designation	Mounting dimensions										
	Type NIP	Without drive		With screw drive							
		2×for linear ball bearings		1×for spindle nut		2×for linear ball bearings		Locating bearing		Non-locating bearing	
		h_{56} mm	l_{56} mm	h_{56} mm	l_{56} mm	h_{57} mm	l_{57} mm	b_{77} mm	l_{77} mm	b_{78} mm	l_{78} mm
LTE08	A1	5	32,5	–							
LTE12		6	42,5								
LTE16		6	50	18	30	6	50	9,5	10,5	9	9
LTE20	DIN[1]	8	65	4,5	22	8	65	0	0	0	0
LTE25	A2	8	80	5	53,15	8	80	10	16	0	12,5
LTE30	A2	9	90	5	56,4[2]	9	90	14	14,5	0	12,5
LTE40	A2	9	115	5	56,4[3]	9	115	13[4]	17[5]	0	15
LTE50	A3	11	140	6	56,4[3]	11	140	0	17[5]	0	15

1) Lubrication nipple DIN 3405-A M6.

2) In the case of a spindle 2020 and 2050, l_{56} = 52 mm.

3) In the case of a spindle 3210 and 3220, l_{56} = 86 mm.
In the case of a spindle 3240, l_{56} = 69 mm.

4) In the case of a spindle size 25, b_{77} = 0 mm.

5) In the case of a spindle size 25, l_{77} = 15,5 mm.

Environments with special requirements

In vacuum applications, lubricants with low vapourisation rates are required in order to maintain the vacuum atmosphere.

In the foodstuffs sector and in clean rooms, special requirements are also placed on lubricants in relation to emissions and compatibility.

For such environmental conditions, please consult the grease manufacturer.

T-slots

The shaft support blocks of size LTE20 are designed for thin hexagon nuts in accordance with DIN EN ISO 4035, *Figure 27*.

LTE

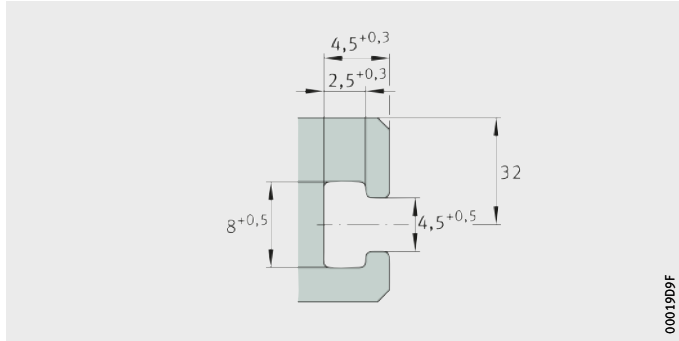

Figure 27
T-slot size in shaft support block

Filling openings

The thin hexagon nuts are pushed into the T-slot on the end faces of the shaft support blocks.

Connectors for switching tags

Switching tags can be screw mounted to the linear table in order to activate switches in the adjacent construction. The position and size are dependent on the size, *Figure 28* and table.

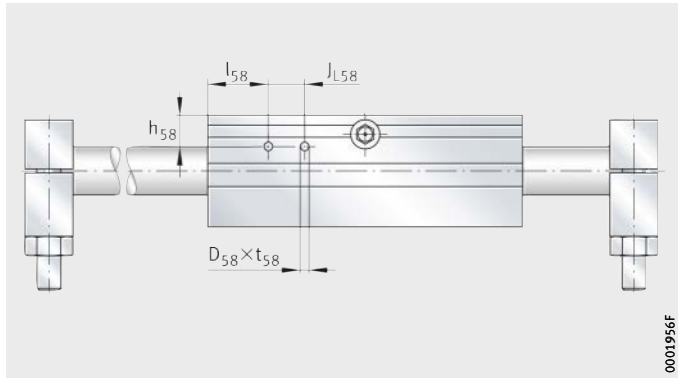

Figure 28
Connectors for switching tags
on actuator LTE20-A-OA

Mounting dimensions for switching tags on actuator LTE20-A-OA

Series Actuator	Mounting dimensions				
				∅ P9	Depth
	J_{L58} mm	l_{58} mm	h_{58} mm	D_{58} mm	t_{58} mm
LTE20-A-OA	15	25	13	3,5	12

Maximum permissible spindle speed

Screw drives must not be allowed to run in the critical speed range.

The critical speed is essentially dependent on the following factors:

- spindle length
- spindle diameter
- spindle bearing arrangement
- mounting method.

The carriage unit velocity v is determined from the spindle speed n and the spindle pitch P. The limit values for velocities must be observed, see page 555.

For calculation of the carriage unit velocity, the following applies:

$$v = \frac{n \cdot P}{60 \cdot 1000}$$

v Carriage unit velocity	m/s
n Spindle speed	min^{-1}
P Spindle pitch.	mm

Diagram

The diagram shows the relationship for individual series and sizes between the critical speed and the spindle length, *Figure 29*.
The diagram takes account of the effective length B_L of the bellows cover.

LTE16
LTE20
LTE25
LTE30
LTE40
LTE50

n_{max} for pitch 5 mm
n = spindle speed
L_{tot} = support shaft length

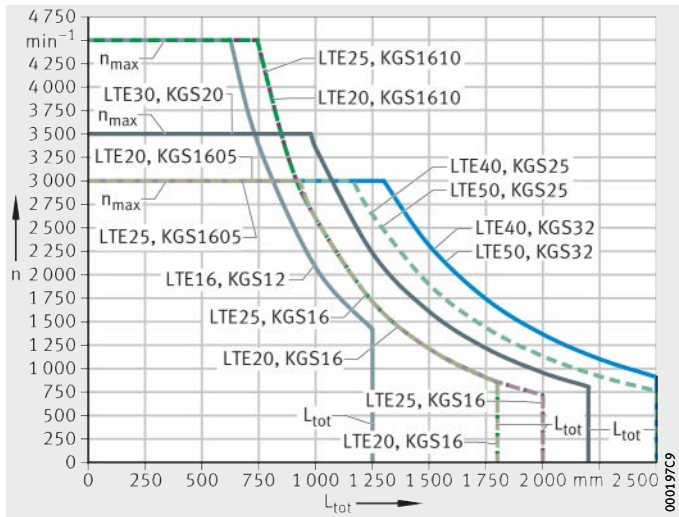

Figure 29
Maximum permissible spindle speed

Influences of the adjacent construction

The running accuracy is essentially dependent on the straightness and accuracy of the fit and mounting surfaces.

The higher the requirements for accuracy and smooth running of the guidance system, the more attention must be paid to the geometrical and positional accuracy of the mounting surfaces.

Linear tables
with closed shaft guidance system

Mounting position and mounting arrangement

Linear tables are suitable for numerous mounting positions and mounting arrangements.

The guidance system can be fitted with a movable or stationary linear table, *Figure 30*, page 587. The linear tables can be used in the common horizontal mounting position and also in a vertical mounting position, *Figure 31*, page 587.

Mounting of linear tables with a carriage unit to one side or suspended overhead is possible, *Figure 32*, page 587.
In such cases, please consult the Schaeffler engineering service.

The ball screw drives fitted in these linear tables are not self-locking. The carriage unit and load must be secured against autonomous travel or dropping if the linear tables are used in a vertical or tilted mounting position. This can be achieved, for example, by means of a brake or counterweight. The drop guard must function in manual operation as well as in motor operation, especially if the motor has no current.

Safety guidelines (especially in relation to personal protection) must be observed.

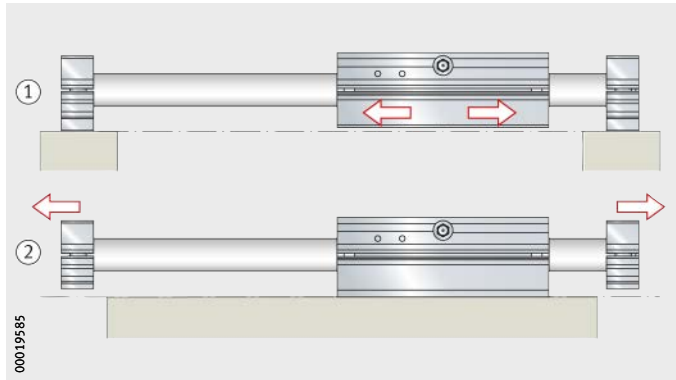

① Design A: movable carriage unit
② Design B: stationary carriage unit

Figure 30
Movable or stationary carriage unit

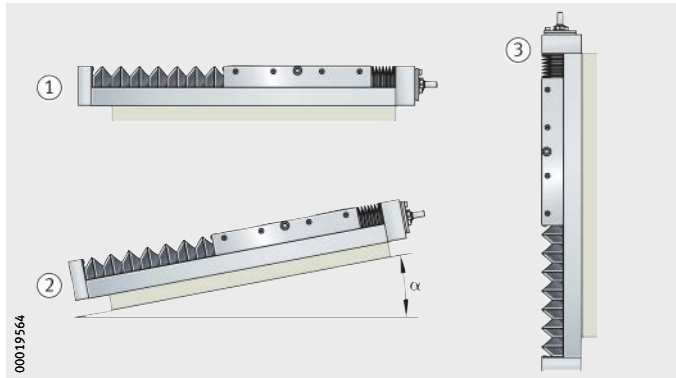

① Horizontal
② Tilted
③ Vertical

Figure 31
Mounting positions

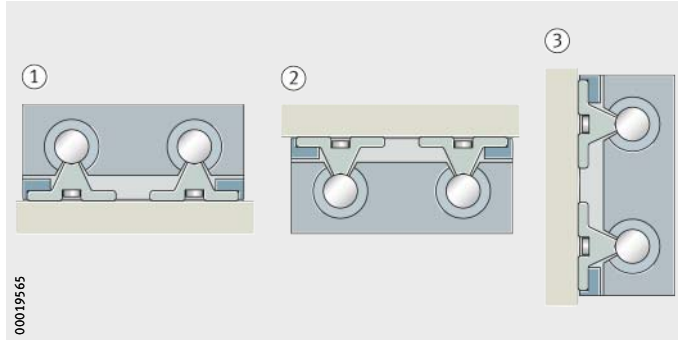

① Mounting position 0°
② Mounting position 180°
③ Mounting position 90°

Figure 32
Mounting positions

Kinematic operating limits

Maximum velocities are determined as a function of the critical spindle speed, see tables. The limiting speed of the bearings can also restrict the spindle speed and thus the velocity.

Kinematic operating limits with trapezoidal screw drive

Series and size	Spindle		Maximum acceleration	Maximum velocity	Maximum spindle speed
	d_0	P	a	v	n
	mm	mm	m/s^2	m/s	min^{-1}
LTE16	12	3	2,5	0,075	1 500
LTE20	16	4	2,5	0,1	1 500
LTE25	16	4	2,5	0,1	1 500
LTE30	20	4	2,5	0,1	1 500
		8			
LTE40	24	5	2,5	0,125	1 500
		10			
LTE50	32	6	2,5	0,125	1 500

Kinematic operating limits with ball screw drive

Series and size	Spindle		Spindle nut design		Maximum acceleration		Maximum velocity	Maximum spindle speed
	d_0	P			a		v	n
	mm	mm			m/s^2	m/s^2	m/s	min^{-1}
LTE16	12	4	M	–	20	–	0,25	4 500
LTE20	16	5	M	MM	20	10	0,25	3 000
		10	M	–		–	0,75	4 500
LTE25	16	5	M	MM	20	10	0,25	3 000
		10	M	MM		10	0,75	4 500
LTE30	20	5	M	MM	20	10	0,29	3 500[1)]
		10	M	MM		10	0,75	3 000
		20	M	–		–	1,16	3 500[1)]
		50	M	–		–	0,29	3 500[1)]
LTE40	25	5	M	MM	20	10	0,25	3 000
	32	10	M	MM	20	10	0,5	3 000[1)]
		20	M	MM		10	1	
		40	M	–		–	2	
LTE50	25	5	M	MM	20	10	0,25	3 000
	32	10	M	MM	20	10	0,5	3 000[1)]
		20	M	MM		10	1	
		40	M	–		–	2	

1) Restricted by the limiting speed of the bearing with grease lubrication.

Mounting

In most applications, a linear table is mounted in two steps:

- location of the support rail or base plate on the adjacent construction
- mounting of the components to be moved on the carriage unit.

The support rail or base plate is screw mounted to the stationary adjacent construction using conventional fixing screws and washers. Location of the components that are to be moved with the carriage unit can be carried out using conventional fixing screws.

Interchange of linear table components

For the fitting and assembly of linear table components, a fitting and maintenance manual is available. Please consult the Schaeffler engineering service.

Maintenance

Failure to carry out maintenance, incorrect maintenance, assembly errors and lubrication errors as well as inadequate protection against contamination can lead to premature failure of linear tables.

Maintenance work is restricted in general to relubrication, cleaning and regular visual inspection for damage.

Maintenance intervals, especially the intervals between relubrication, are influenced by the following factors:

- the travel velocity
- the load
- the temperature
- the stroke length
- the environmental conditions and influences.

Guidance parts relevant to function must be greased and supplied with lubricant via appropriate lubrication points.

Cleaning

If heavy contamination is present, linear tables must be cleaned in order to ensure reliable function. Suitable cleaning tools include paintbrushes, soft brushes and soft cloths.

Abrasives, petroleum ether and oils must not be used.

Accuracy
Length tolerances

The length tolerances for linear tables can be taken from *Figure 33* and the table.

L_{tot} = total length

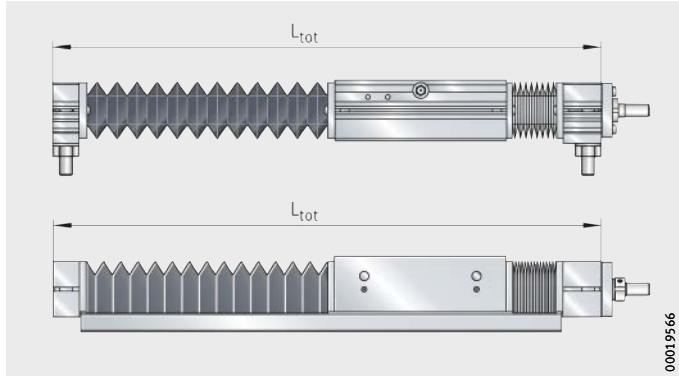

Figure 33
Length tolerances

Length tolerances for all linear tables

Total length L_{tot} of linear tables LTE mm	Tolerance mm
$L_{tot} <$ 400	±0,5
400 ≦ $L_{tot} <$ 1 000	±0,8
1 000 ≦ $L_{tot} <$ 2 000	±1,2
2 000 ≦ $L_{tot} <$ 4 000	±2
4 000 ≦ $L_{tot} <$ 6 000	±3

Accuracy of the screw drive

Linear tables with trapezoidal screw drive are only available with a single nut with clearance, see table, page 591.
The pitch accuracy is dependent on the size, see table, page 591.

Linear tables with ball screw drive are only available with a single nut with clearance, see table, page 591. Where higher accuracy requirements are present, preloaded (clearance-free) double nuts are possible for many pitch values, see table, page 591.

In the case of standard linear tables with ball screw drive, the nut unit (double nut) can only be preloaded clearance-free if the spindle pitch P is less than the nominal diameter d_0 of the spindle.

Trapezoidal screw drive

Designation	Spindle			Spindle nut	
	Nominal diameter	Pitch		Single nut	
	d_0 mm	P mm	Accuracy µm each 300 mm	Suffix	Axial clearance mm
LTE16	12	3	300	M	0,4 to 0,5
LTE20	16	4	50		
LTE25	16	4	50		
LTE30	20	4	50		
		8	200		
LTE40	24	5	50		
		10	200		
LTE50	32	6	50		

Ball screw drive

Designation	Spindle			Spindle nut			
	Nominal diameter	Pitch		Single nut		Double nut	
	d_0 mm	P mm	Accuracy µm each 300 mm	Suffix	Axial clearance mm	Suffix	Axial clearance
LTE16	12	4	50	M	0,05	–	–
LTE20	16	5	50	M	0,05	MM	Preloaded
		10		M	0,05	–	–
LTE25	16	5	50	M	0,05	MM	Preloaded
		10		M	0,05	MM	Preloaded
LTE30	20	5	50	M	0,05	MM	Preloaded
		10		M	0,05	MM	Preloaded
		20		M	0,05	–	–
		50					
LTE40	25	5	50	M	0,05	MM	Preloaded
	32	10		M	0,05	MM	Preloaded
		20		M	0,05	MM	Preloaded
		40		M	0,05	–	–
LTE50	25	5	50	M	0,05	MM	Preloaded
	32	10		M	0,05	MM	Preloaded
		20		M	0,05	MM	Preloaded
		40		M	0,05	–	–

Ordering example, ordering designation

Available designs of linear tables LTE, see table.

Available designs

Design	Linear table with closed linear ball bearing guidance system		
Size	Size code		
Carriage unit length	Length	L	mm
Shaft support block types	Design A	A	
	Design B	B	
No drive type	Without drive	● / OA	
Drive type with	Trapezoidal screw drive	TR / TGT	
Spindle dimensions	Trapezoidal screw diameter	d_0	mm
	Spindle pitch	P	mm
Nut design	Single nut	●	
Drive type with	Ball screw drive	● / KGT	
Spindle dimensions	Ball screw diameter	d_0	mm
	Spindle pitch	P	mm
Nut design	Single nut	M	
	Double nut	MM	
Cover optional	Without bellows	0	
	With bellows	1	
Lengths	Total length	L_{tot}	mm
	Total stroke length	G_H	mm

● Standard scope of delivery.

■ Design not available.

Designation and suffixes																			
LTE																			
08	12	16		20		25		30				40				50			
65	85	100		130		160		180				230				280			
A	A	A		A		A		A				A				A			
B	B	B		B		B		B				B				B			
●	●	●		OA		●		●				●				●			
■	■	TR		TGT		TR		TR				TR				TR			
■	■	12		16		16		20				24				32			
■	■	3		4		4		4		8		5		10		6			
■	■	●		●		●		●		●		●		●		●			
■	■	●		KGT		●		●				●				●			
■	■	12		16		16		20				25	32			25	32		
■	■	04	05	05	10	05	10	05	10	20	50	05	10	20	40	05	10	20	40
■	■	M	M	M	M	M	M	M	M	M	M	M	M	M	M	M	M	M	M
■	■	■	■	MM	■	MM	MM	MM	MM	■	■	MM	MM	MM	■	MM	MM	MM	■
●	●	0		0		0		0				0				0			
■	■	1		1		1		1				1				1			
to be calculated from total stroke length, see page 574																			
to be calculated from effective stroke length, see page 574																			

Closed shaft guidance system, without drive

Linear table	
with closed linear ball bearing guidance system	LTE
Size code	20
Carriage plate length L	130 mm
Shaft support blocks, design (A or B)	B
Without drive	OA
Bellows (with = 1, without = 0)	0
Total length L_{tot}	570 mm
Total stroke length G_H	400 mm

Ordering designation **LTE20-130-B-OA-0/570-400**, *Figure 34*

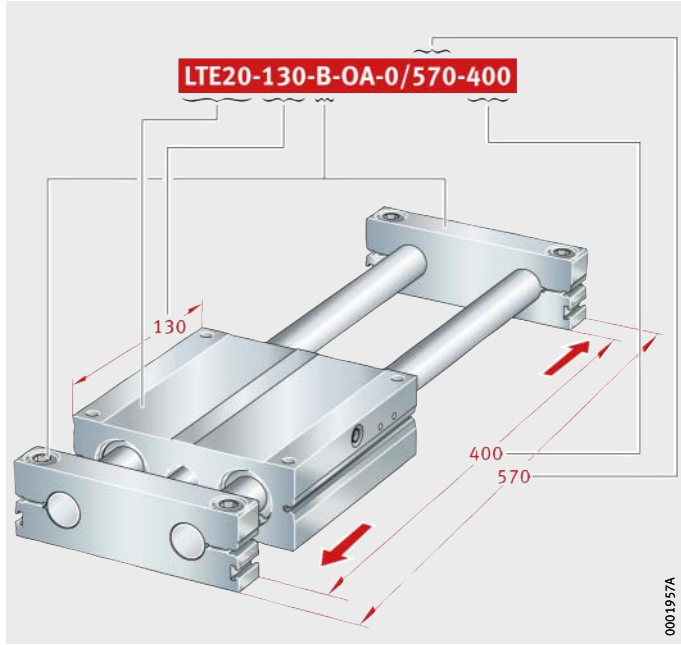

Figure 34
Ordering designation

Closed shaft guidance system, with trapezoidal screw drive

Linear table	
with closed linear ball bearing guidance system	LTE
Size code	20
Carriage plate length L	130 mm
Shaft support blocks, design (A or B)	A
Trapezoidal screw drive, d_0 = 16 mm pitch P = 4 mm	TGT 16X4
Bellows (with = 1, without = 0)	1
Total length L_{tot}	731 mm
Total stroke length G_H	400 mm

Ordering designation **LTE20-130-A-TGT 16X4-1/731-400**, *Figure 35*

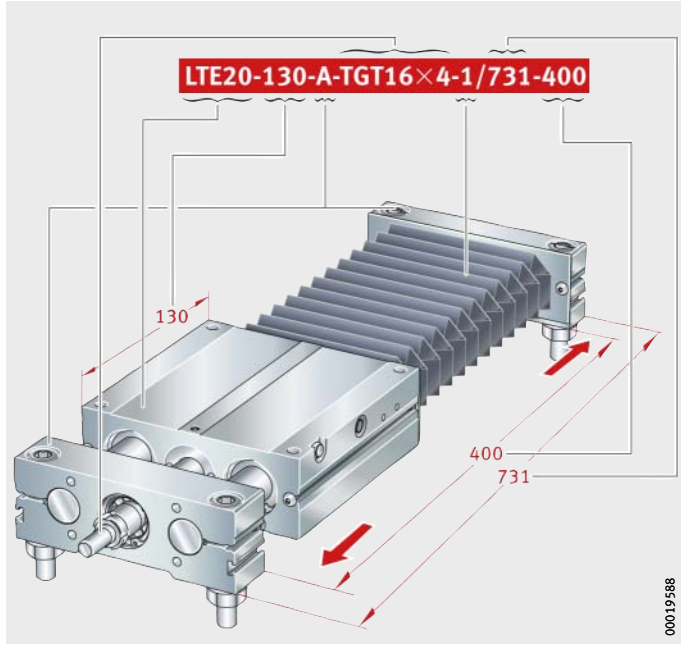

Figure 35
Ordering designation

Closed shaft guidance system, with ball screw drive

Linear table	
with closed linear ball bearing guidance system	LTE
Size code	20
Carriage plate length L	130 mm
Shaft support blocks, design (A or B)	A
Ball screw drive, d_0 = 16 mm pitch P = 5 mm	KGT1605
Nut (cylindrical, single nut)	M
Bellows (with = 1, without = 0)	1
Total length L_{tot}	731 mm
Total stroke length G_H	400 mm

Ordering designation **LTE20-130-A-KGT 1605-M-1/731-400**, *Figure 36*

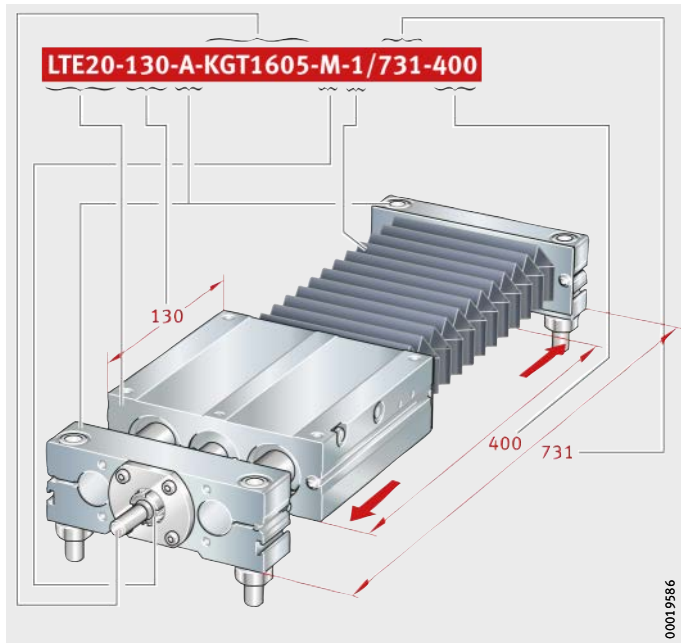

Figure 36
Ordering designation

Linear tables

Closed linear ball bearing guidance system
Without drive

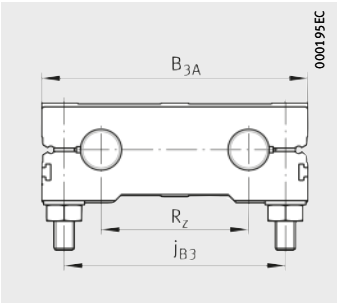

LTE..-A

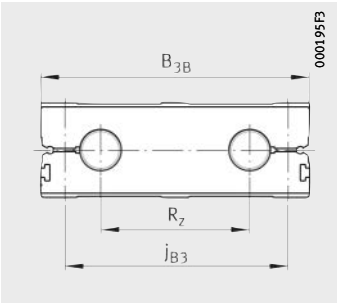

LTE..-B

Dimension table · Dimensions in mm

Designation		Dimensions			
Design A	Design B	B_1, B_{3A}, B_{3B}	H	H_1, H_{3A}	L
LTE08-65-A[1]	**LTE08-65-B**[1]	65	24	23	65
LTE12-85-A[1]	**LTE12-85-B**[1]	85	34	32	85
LTE16-100-A	**LTE16-100-B**	100	38	36	100
LTE20-130-A-OA	**LTE20-130-B-OA**	130	48	46	130
LTE25-160-A	**LTE25-160-B**	160	58	56	160
LTE30-180-A	**LTE30-180-B**	180	67	64	180
LTE40-230-A	**LTE40-230-B**	230	84	80	230
LTE50-280-A	**LTE50-280-B**	280	100	96	280

For further table values, see page 610 and page 611.

Calculation of length L_{tot}, see page 574.

1) Not available with bellows.

2) ① Lubrication nipple DIN 3405-A M6, see page 581.
② Filling openings, see page 584.
③ Switching tag connectors on carriage unit, see page 584.

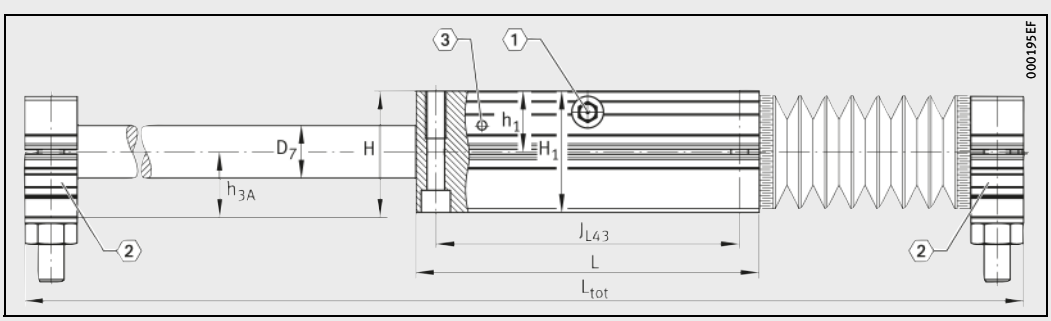

LTE..-A
①, ②, ③ 2)

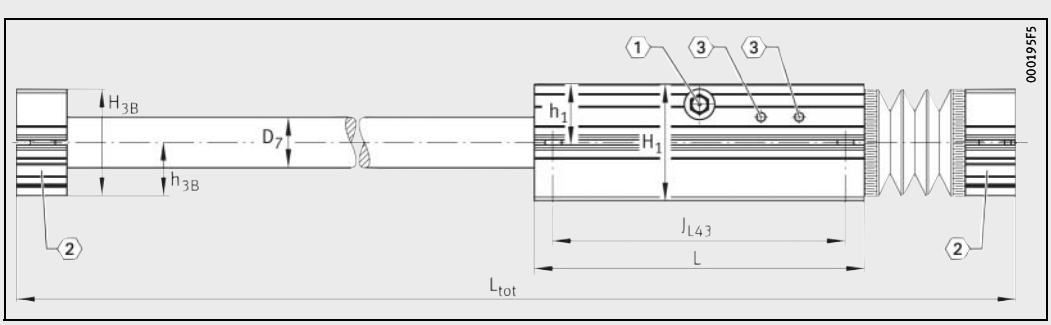

LTE..-B
①, ②, ③ 2)

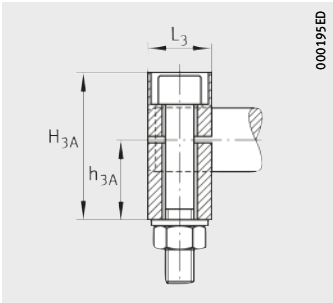

LTE..-A

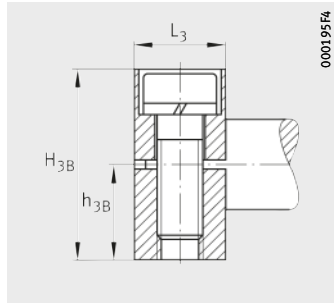

LTE..-B

Mounting dimensions

∅ D_7 h7	h_1	h_{3A}	h_{3B}	H_{3B}	j_{B3}	J_{B43}, J_{L43}	L_3	R_z
8	11,5	12,5	11	22	52	55	12	32
12	16	18	14	28	70	73	14	42
16	18	20	16	32	82	88	18	54
20	23	25	21	42	108	115	20	72
25	28	30	26	52	132	140	25	88
30	32	35	29	58	150	158	25	96
40	40	44	36	72	190	202	30	122
50	48	52	44	88	240	250	30	152

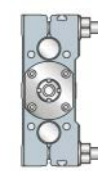

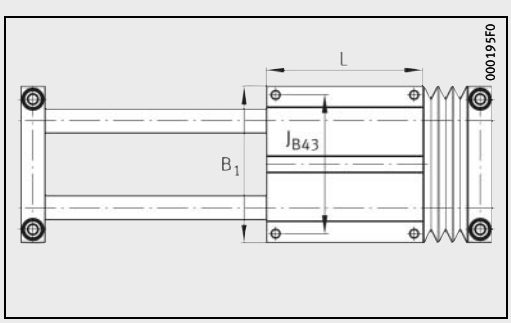

LTE · Top view

Linear tables

Closed linear ball bearing guidance system
With trapezoidal screw drive

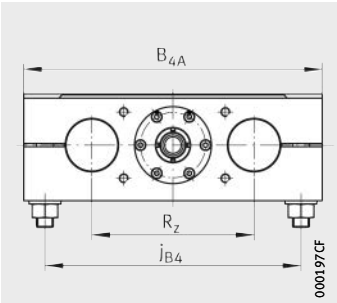

LTE40..-A-TR and LTE50..-A-TR

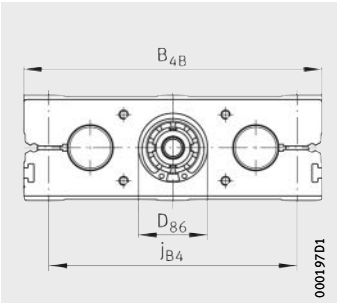

LTE16..-B-TR, LTE20..-B-TGT, LTE25..-B-TR, LTE30..-B-TR

Dimension table · Dimensions in mm

Designation		Dimensions				Mounting dimensions				
Design A	Design B	B_1, B_{4A}, B_{4B}	H	H_1, H_{4A}, H_{5A}	L	b_{87} ±0,2	∅ d_{85} h7	∅ d_{86} g7	∅ D_7 h7	D_{86} H7
LTE16-100-A-TR	**LTE16-100-B-TR**	100	38	36	100	44	5	–	16	17
LTE20-130-A-TGT	**LTE20-130-B-TGT**	130	48	46	130	62	9[1)]	–	20	30
LTE25-160-A-TR	**LTE25-160-B-TR**	160	58	56	160	64	9[1)]	–	25	30
LTE30-180-A-TR	**LTE30-180-B-TR**	180	67	64	180	68	10	–	30	32
LTE40-230-A-TR	**LTE40-230-B-TR**	230	84	80	230	68	16[1)]	66	40	–
LTE50-280-A-TR	**LTE50-280-B-TR**	280	100	96	280	62	16	72	50	–

For further table values, see page 610 and page 611.

Calculation of length L_{tot}, see page 574.

1) Thread witness marks may be present on the pin.

2) ① Lubrication nipple DIN 3405-A M6, see page 581.
② Filling openings, see page 584.
③ Switching tag connectors on carriage unit, see page 584.

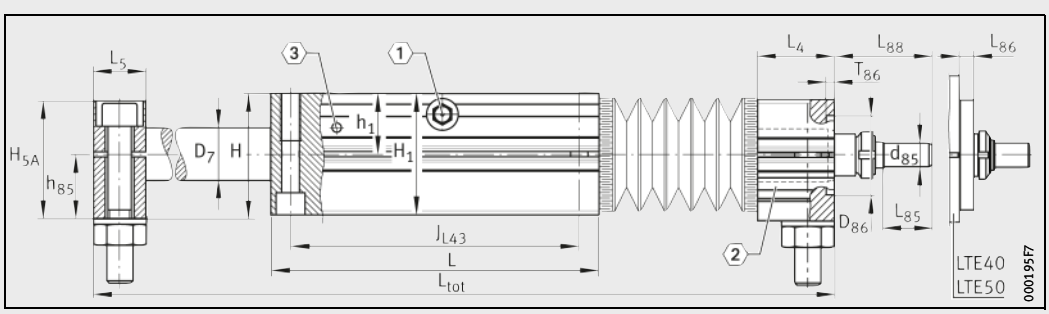

LTE20..-A-TGT
①, ②, ③ [2)]

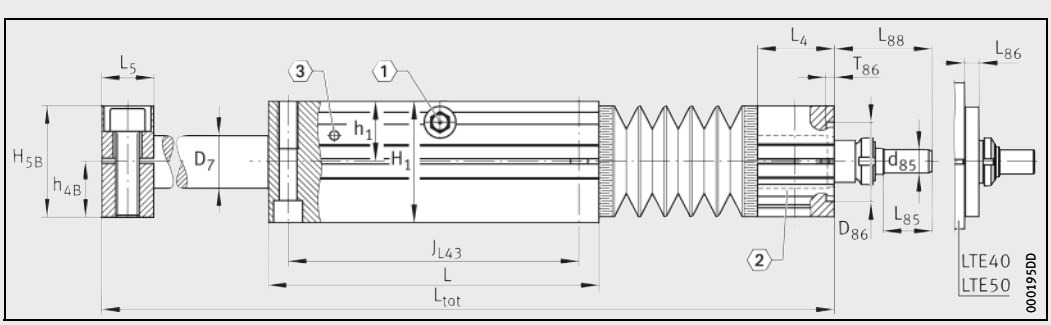

LTE20..-B-TGT
①, ②, ③ [2)]

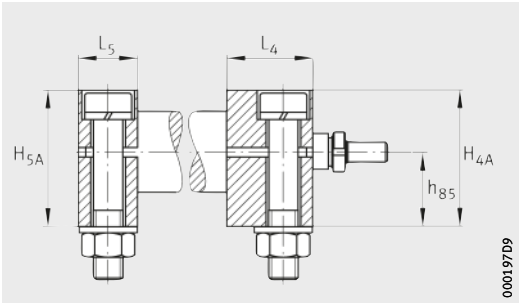

LTE..-A-TR, LTE..-A-TGT · Detail

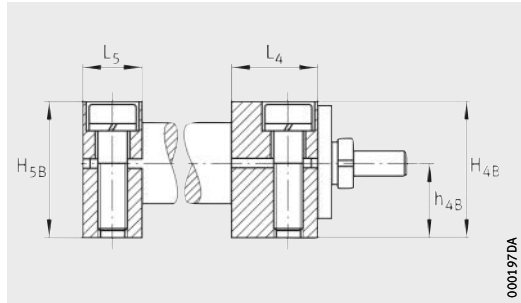

LTE..-B-TR, LTE..-B-TGT · Detail

G_{87} M×Depth	h_1	h_{4B}, h_{5B}	h_{85}	h_{87} ±0,2	H_{4B}, H_{5B}	j_{B4}	J_{B43}, J_{L43}	L_4	L_5	L_{85}	L_{86}	L_{88}	R_z	T_{56}	T_{86}
M5×12	18	16	20	22	32	82	88	24	18	12	–	28,5	54	–	3
M6×15	23	21	25	30	42	108	115	29	20	18	–	37	72	3,75	2,8
M6×15	28	26	30	38	52	132	140	33	25	18	–	34,5	88	–	3,3
M6×15	32	29	35	44	58	150	158	38	25	18	–	36,5	96	–	2,8
M8×18	40	36	44	56	72	190	202	39	30	23	9	46	122	–	–
M8×18	48	44	52	62	88	240	250	42	30	23	9	46	152	–	–

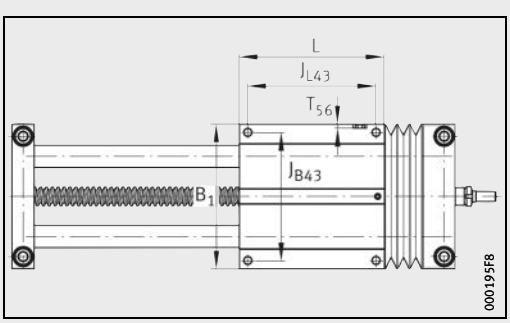

LTE · Top view

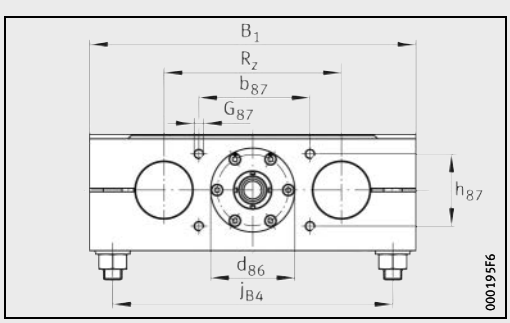

LTE40..-A-TR, LTE50..-A-TR (with centring cover) · Drive flange, drive shaft

Linear tables

Closed linear ball bearing guidance system
With trapezoidal screw drive
Drive
Performance data

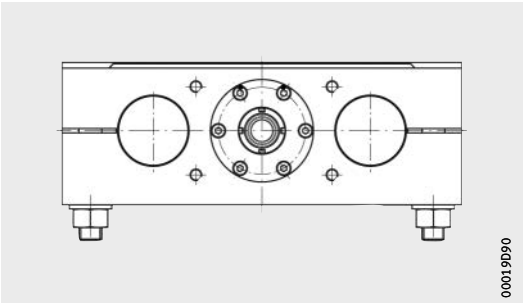

LTE

Performance data

Designation		Drive				
Design A	Design B	Spindle			Spindle nut	
		Diameter d_0 mm	Pitch P mm	Mass moment of inertia kg · cm²	Design	Basic static load rating C_0[1] N
LTE16-100-A-TR	**LTE16-100-B-TR**	12	3	0,09	Single nut	630
LTE20-130-A-TGT	**LTE20-130-B-TGT**	16	4	0,3	Single nut	2 250
LTE25-160-A-TR	**LTE25-160-B-TR**	16	4	0,3	Single nut	2 250
LTE30-180-A-TR	**LTE30-180-B-TR**	20	4	0,81	Single nut	2 550
			8			
LTE40-230-A-TR	**LTE40-230-B-TR**	24	5	1,65	Single nut	2 500
			10			
LTE50-280-A-TR	**LTE50-280-B-TR**	32	6	5,45	Single nut	5 530

For further table values, see page 600 and page 601.

[1] In the case of linear tables with trapezoidal screw drive,
the maximum axial load is restricted by the spindle bearing arrangement.
Please consult us regarding the loading of the trapezoidal screw drive.

Spindle bearing arrangement (locating bearing)		Drive torque on drive stud max.
Bearing	Basic static axial load rating C_{0a} N	Nm
30/6-2RSR	630	1,5
2×7200-2RS	2 250	3
2×7200-2RS	2 250	3
2×7201-2RS	2 550	10
3303-2RS	2 500	5
3304-2RS	5 530	5

Linear tables

Closed linear ball bearing guidance system
With ball screw drive

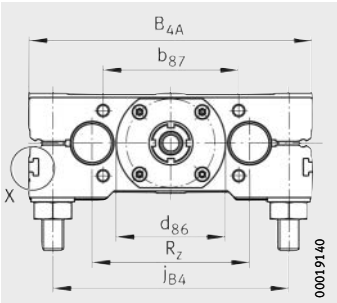

LTE..-A, LTE20..-A-KGT

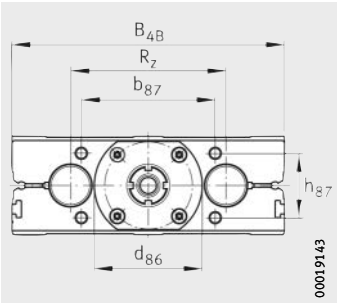

LTE..-B, LTE20..-B-KGT

Dimension table · Dimensions in mm

Designation		Dimensions				Mounting dimensions				
Design A	Design B	B_1, B_{4A}, B_{4B}	H	H_1, H_{4A}, H_{5A}	L	b_{87} ±0,2	∅ d_{74}	∅ d_{85} h7	∅ d_{86} g7	∅ D_7 h7
LTE16-100-A-12	**LTE16-100-B-12**	100	38	36	100	44	38	5	24	16
LTE20-130-A-KGT	**LTE20-130-B-KGT**	130	48	46	130	62	–	9[1)]	50	20
LTE25-160-A-16	**LTE25-160-B-16**	160	58	56	160	64	–	9[1)]	52	25
LTE30-180-A-20	**LTE30-180-B-20**	180	67	64	180	68	–	10	60	30
LTE40-230-A-25	**LTE40-230-B-25**	230	84	80	230	68	–	16[1)]	66	40
LTE40-230-A-32	**LTE40-230-B-32**							16	72	
LTE50-280-A-25	**LTE50-280-B-25**	280	100	96	280	62	–	16[1)]	66	50
LTE50-280-A-32	**LTE50-280-B-32**							16	72	

For further table values on connection, see page 610 and page 611.

Calculation of length L_{tot}, see page 574.

1) Thread witness marks may be present on the pin.

2) ① Lubrication nipple DIN 3405-A M6, see page 581.
② Filling openings, see page 584.
③ Switching tag connectors on carriage unit, see page 584.

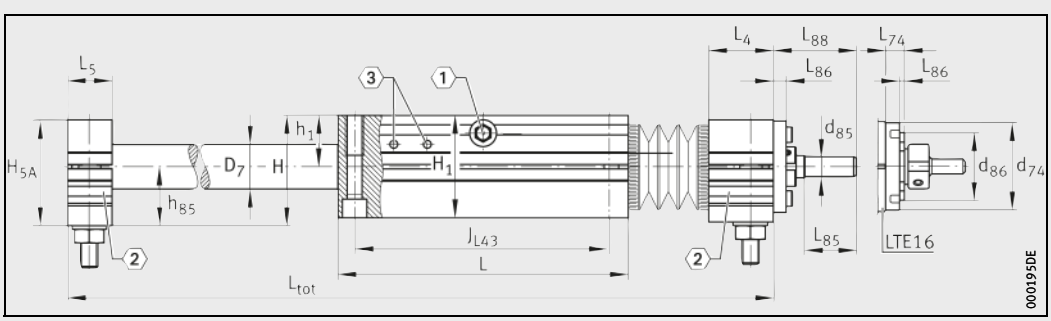

LTE..-A
①, ②, ③ [2)]

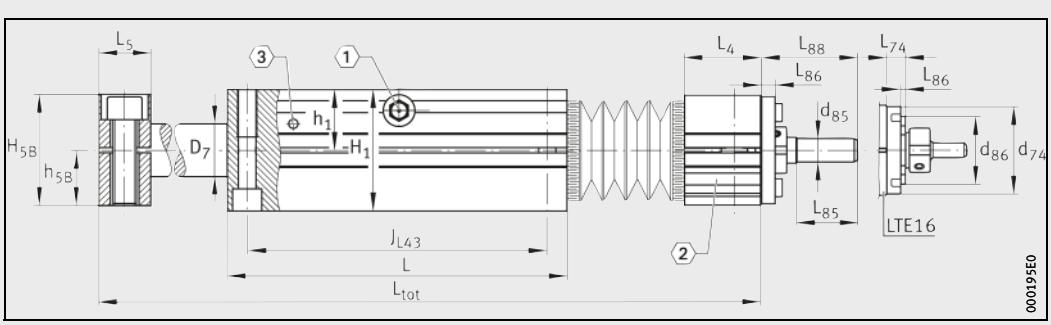

LTE..-B
①, ②, ③ [2)]

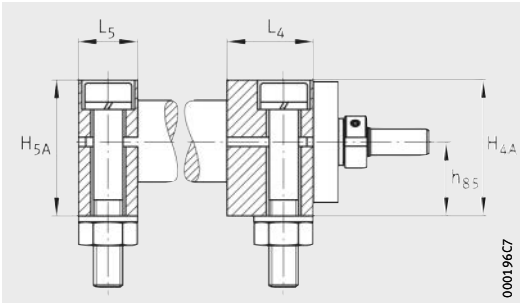

LTE..-A, LTE20..-A-KGT · Detail

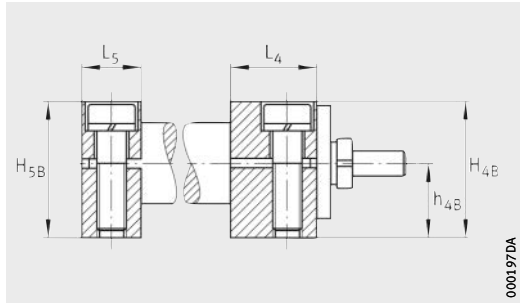

LTE..-B, LTE20..-B-KGT · Detail

G_{87} M×depth	h_1	h_{4B}, h_{5B}	h_{85}	h_{87} ±0,2	H_{4B}, H_{5B}	j_{B4}	J_{B43}, J_{L43}	L_4	L_5	L_{74}	L_{85}	L_{86}	L_{88}	R_z	T_{56}
M5×12	18	16	20	22	32	82	88	24	18	6,5	12	1,5	28,5	54	–
M6×15	23	21	25	30	42	108	115	29	20	–	23	8	37	72	3,75
M6×15	28	26	30	38	52	132	140	33	25	–	18	7	34,5	88	–
M6×15	32	29	35	44	58	150	158	38	25	–	18	9	36,5	96	–
M8×18	40	36	44	56	72	190	202	39 42	30	–	23	9	46	122	–
M8×18	48	44	52	62	88	240	250	39 42	30	–	23	9	46	152	–

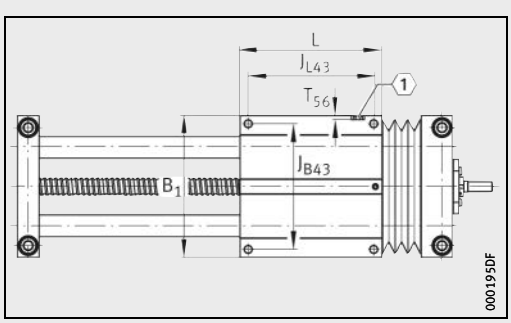

LTE · Top view
1 2)

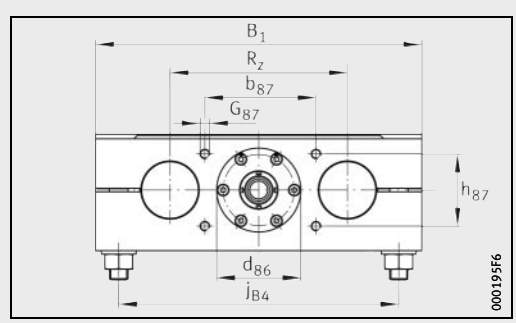

LTE..-A · Drive flange, drive shaft

Linear tables

Closed linear ball bearing guidance system
With ball screw drive
Drive
Performance data

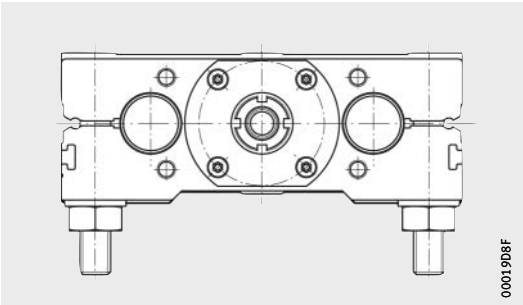

LTE

Performance data

Designation		Drive					
Design A	Design B	Spindle			Spindle nut		
		Diameter d_0 mm	Pitch P mm	Mass moment of inertia kg · cm²	Design	Basic dynamic load rating C_a [1] N	Basic static load rating C_0 [1] N
LTE16-100-A-12	**LTE16-100-B-12**	12	4	0,11	Single nut	4 900	6 600
			5			4 400	6 800
LTE20-130-A-KGT	**LTE20-130-B-KGT**	16	5	0,313	Single nut, double nut	9 300	13 100
			10	0,321	Single nut	15 400	26 500
LTE25-160-A-16	**LTE25-160-B-16**	16	5	0,313	Single nut, double nut	9 300	13 100
			10	0,321		15 400	26 500
LTE30-180-A-20	**LTE30-180-B-20**	20	5	0,846	Single nut, double nut	10 500	16 600
			10	0,846		12 700	22 100
			20	0,883	Single nut	11 600	18 400
			50	0,845		13 000	24 600
LTE40-230-A-25	**LTE40-230-B-25**	25	5	2,25	Single nut, double nut	12 300	22 500
LTE40-230-A-32	**LTE40-230-B-32**	32	10	6,43		33 400	54 500
			20			29 700	59 800
			40		Single nut	14 900	32 400
LTE50-280-A-25	**LTE50-280-B-25**	25	5	2,25	Single nut, double nut	12 300	22 500
LTE50-280-A-32	**LTE50-280-B-32**	32	10	6,43		33 400	54 500
			20			29 700	59 800
			40		Single nut	14 900	32 400

For further table values, see page 604 and page 605.

[1] Basic load ratings in accordance with DIN 69051. Due to the modified calculation algorithms in DIN 69051, the basic load ratings C_a and C_0 may differ in comparison with older data.

Spindle bearing arrangement (locating bearing)			Drive torque on drive stud max.
Bearing	Basic dynamic axial load rating C_a N	Basic static axial load rating C_{0a} N	Nm
ZKLN0624-2RS-PE	6 900	8 500	1,5
ZKLN1034-2RS-PE	13 400	18 800	6
ZKLN1034-2RS-PE	13 400	18 800	6
ZKLN1545-2RS-PE	17 900	28 000	17
ZKLN1747-2RS-PE	18 800	31 000	12
ZKLN2052-2RS-PE	26 000	47 000	50
ZKLN1747-2RS-PE	18 800	31 000	12
ZKLN2052-2RS-PE	26 000	47 000	50

Linear tables

Closed linear ball bearing guidance system
Performance data

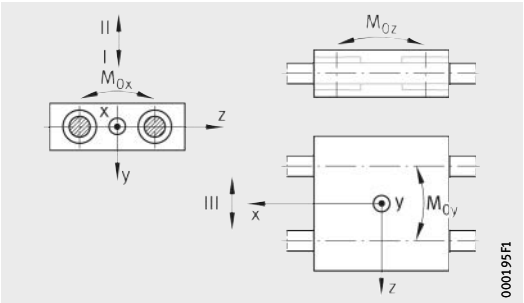

Load directions

Performance data

Designation		Carriage unit guidance system (for each carriage unit)[1]						
Design A	Design B	Linear ball bearing	Basic load ratings (per carriage unit)					
			Load direction I Minimum compressive load		Load direction II Minimum tensile load		Load direction III Minimum lateral load	
			dyn. C N	stat. C_0 N	dyn. C N	stat. C_0 N	dyn. C N	stat. C_0 N
LTE08-65-A	**LTE08-65-B**	KB08-P	630	860	630	860	630	860
LTE12-85-A	**LTE12-85-B**	KB12-P	1 420	1 540	1 420	1 540	1 420	1 540
LTE16-100-A	**LTE16-100-B**	KB16-P	1 870	2 120	1 870	2 120	1 870	2 120
LTE16-100-A-TR	**LTE16-100-B-TR**							
LTE16-100-A-12	**LTE16-100-B-12**							
LTE20-130-A-OA	**LTE20-130-B-OA**	KB20-P	4 140	4 920	4 140	4 920	4 140	4 920
LTE20-130-A-TGT	**LTE20-130-B-TGT**							
LTE20-130-A-KGT	**LTE20-130-B-KGT**							
LTE25-160-A	**LTE25-160-B**	KB25-P	7 390	8 880	7 390	8 880	7 390	8 880
LTE25-160-A-TR	**LTE25-160-B-TR**							
LTE25-160-A-16	**LTE25-160-B-16**							
LTE30-180-A	**LTE30-180-B**	KB30-P	9 500	11 400	9 500	11 400	9 500	11 400
LTE30-180-A-TR	**LTE30-180-B-TR**							
LTE30-180-A-20	**LTE30-180-B-20**							
LTE40-230-A	**LTE40-230-B**	KB40-P	15 830	17 600	15 830	17 600	15 830	17 600
LTE40-230-A-TR	**LTE40-230-B-TR**							
LTE40-230-A-25	**LTE40-230-B-25**							
LTE40-230-A-32	**LTE40-230-B-32**							
LTE50-280-A	**LTE50-280-B**	KB50-P	22 950	25 200	22 950	25 200	22 950	25 200
LTE50-280-A-TR	**LTE50-280-B-TR**							
LTE50-280-A-25	**LTE50-280-B-25**							
LTE50-280-A-32	**LTE50-280-B-32**							

1) The deflection of the shafts must be taken into consideration.
Design of linear ball bearing guidance systems: see Catalogue WF1.

2) These values apply if load is evenly distributed over all four linear ball bearings.
Values indicate single loads. These must be reduced for combined loads.
For design criteria of the linear guidance system, see Catalogue WF1.

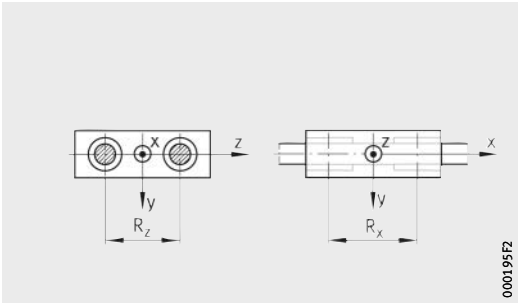

Mounting geometry of linear ball bearings

Permissible static moment ratings (per carriage unit)[2]			Mounting geometry Spacings between linear ball bearings	
$M_{0x\ per}$ Nm	$M_{0y\ per}$ Nm	$M_{0z\ per}$ Nm	R_x mm	R_z mm
14	15	15	34	32
41	37,5	35	46	42
57	48	45	55,6	54
178	155	138	74,6	72
390	340	280	88,6	88
540	503	393	98,6	96
1 080	970	876	134	122
1 904	1 736	1 510	163	152

Linear tables

Closed linear ball bearing guidance system
Location of carriage unit and
shaft support blocks

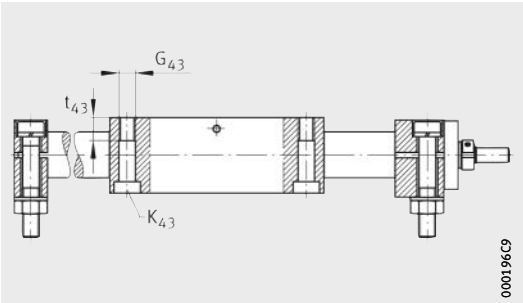

LTE..-A-TGT, LTE..-A-KGT
Carriage unit · Fixing screws

Dimension table

Designation		Fixing screws			
Design A	Design B	Shaft support block A			
		D_3	S_3	T_3	j_{L3}
LTE08-65-A[1]	**LTE08-65-B**[1]	5,5	10	7,3	–
LTE12-85-A[1]	**LTE12-85-B**[1]	6,6	11	8,4	–
LTE16-100-A	**LTE16-100-B**	9	15	8	9
LTE16-100-A-TR	**LTE16-100-B-TR**				
LTE16-100-A-12	**LTE16-100-B-12**				
LTE20-130-A-OA	**LTE20-130-B-OA**	11	18	10	10
LTE20-130-A-TGT	**LTE20-130-B-TGT**				
LTE20-130-A-KGT	**LTE20-130-B-KGT**				
LTE25-160-A	**LTE25-160-B**	13,5	20	15,5	12,5
LTE25-160-A-TR	**LTE25-160-B-TR**				
LTE25-160-A-16	**LTE25-160-B-16**				
LTE30-180-A	**LTE30-180-B**	13,5	20	15,5	12,5
LTE30-180-A-TR	**LTE30-180-B-TR**				
LTE30-180-A-20	**LTE30-180-B-20**				
LTE40-230-A	**LTE40-230-B**	17,5	26	14,5	15
LTE40-230-A-TR	**LTE40-230-B-TR**				
LTE40-230-A-25	**LTE40-230-B-25**				
LTE40-230-A-32	**LTE40-230-B-32**				
LTE50-280-A	**LTE50-280-B**	17,5	26	21	15
LTE50-280-A-TR	**LTE50-280-B-TR**				
LTE50-280-A-25	**LTE50-280-B-25**				
LTE50-280-A-32	**LTE50-280-B-32**				

[1] Not available with bellows.

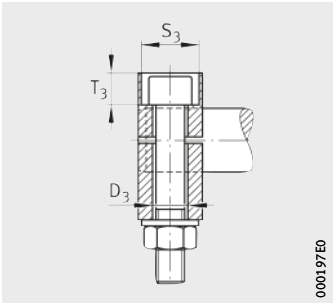

LTE..-A · Location of shaft support block

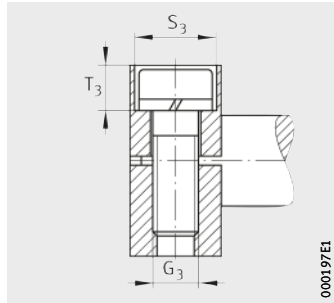

LTE..-B · Location of shaft support block

Shaft support block B	For screws to DIN ISO 4762		
G_3	K_{43}	G_{43}	t_{43}
M5	M4	M5	11
M6	M5	M6	13
M8	M5	M6	13
M10	M6	M8	18
M12	M8	M10	22
M12	M10	M12	26
M16	M12	M16	34
M16	M12	M16	34

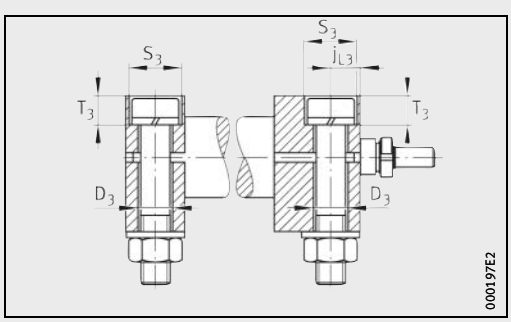

LTE..-A-TR, LTE..-A-TGT, LTE..-A-KGT

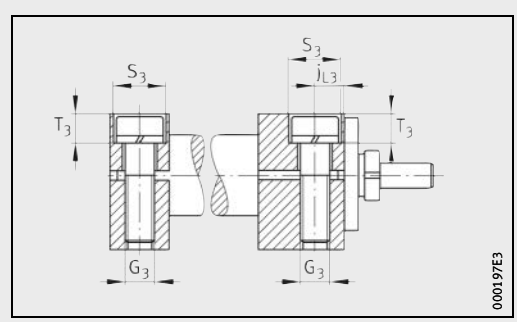

LTE..-B-TR, LTE..-B-TGT, LTE..-B-KGT

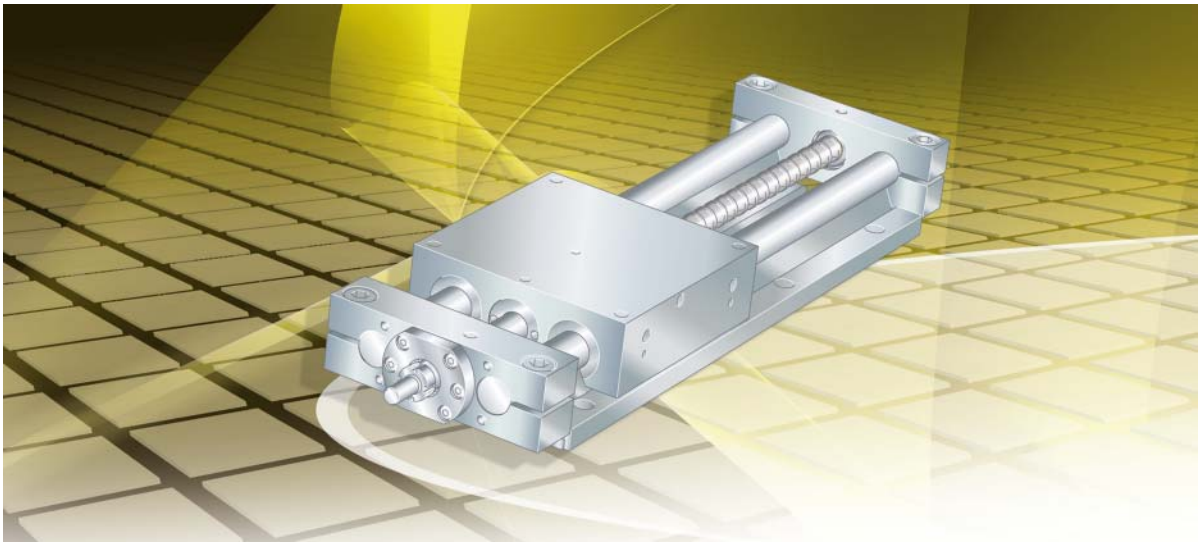

Linear tables
with open shaft guidance system

Linear tables
with open shaft guidance system

Linear tables with open shaft guidance system

Basic design

Open shaft guidance system
Without drive

LTS

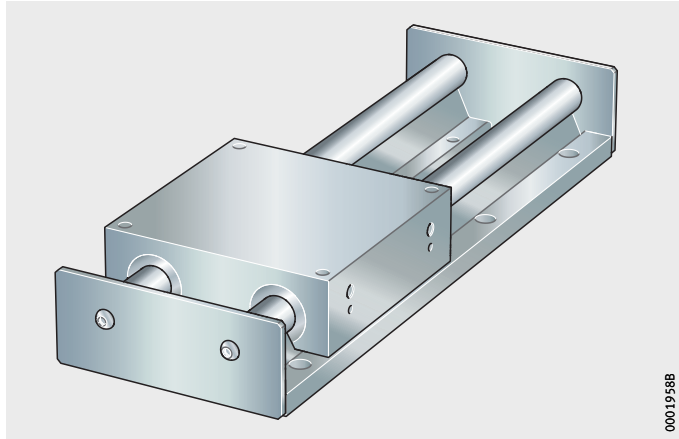

Open shaft guidance system
With trapezoidal screw drive

LTS..-TR

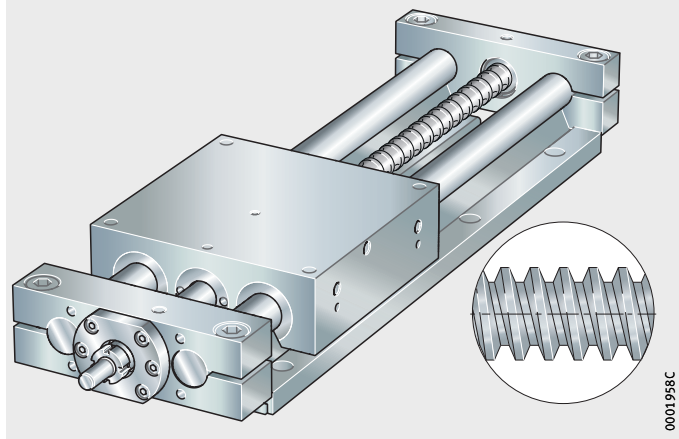

Open shaft guidance system
With ball screw drive

LTS..-KGT

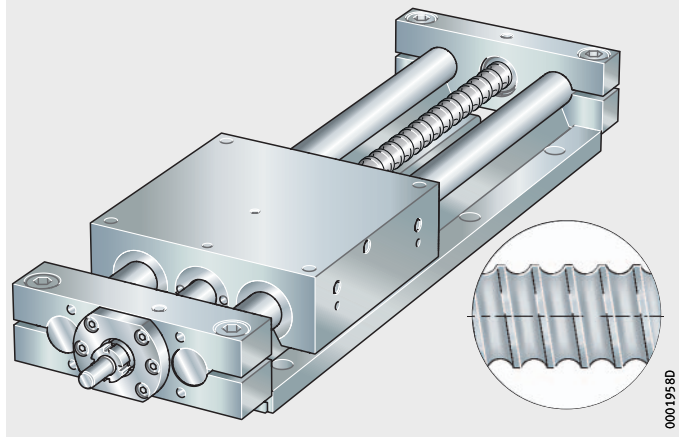

Linear tables
with open shaft guidance system

Features

Linear tables LTS are suitable for moderate loads and long stroke lengths.

Linear tables LTS have higher load capacity in the compressive direction, due to the supported guidance shafts, than for example linear tables LTE with open shaft guidance system.

Basic design

The basic design of linear tables LTS has no drive and comprises:

- a carriage unit made from aluminium alloy with four linear ball bearings KBO lubricated via two lubrication nipples on each side of the carriage unit
- two shaft and support rail units. The shaft and support rail units are composite units comprising an aluminium support rail and a shaft made from quenched and tempered steel to rolling bearing quality. The shafts are hardened and ground
- bellows fitted as optional.

The linear ball bearings have an initial greasing, are sealed and can be relubricated.

With trapezoidal screw drive

Linear tables LTS with trapezoidal screw drive comprise the basic design plus the following additional components:

- a rolled trapezoidal screw spindle with a cylindrical bronze nut
- on the drive side: a locating bearing in a shaft support block; depending on the table size, the locating bearing comprises one double row angular contact ball bearing or two single row angular contact ball bearings
- on the opposite side: a non-locating bearing in a shaft support block; the non-locating bearing comprises one single row ball bearing.

The spindle support bearings are sealed and lubricated for life. The spindle nut has an initial greasing, is sealed and can be relubricated via a lubrication nipple in the carriage unit.

Linear tables
with open shaft guidance system

With ball screw drive

Linear tables LTS with ball screw drive comprise the basic design plus the following additional components:

- a rolled ball screw spindle with a cylindrical single nut M. In the case of some pitch values, preloaded double nuts MM are also possible
- on the drive side: a locating bearing in a shaft support block; the locating bearing comprises a preloaded double row angular contact ball bearing ZKLN and a lubrication nipple
- on the opposite side: a non-locating bearing in a shaft support block; the non-locating bearing comprises a needle roller bearing NA and a lubrication nipple.

The spindle support bearings and spindle nuts have an initial greasing, are sealed and can be relubricated. The spindle nuts can be relubricated via a lubrication nipple in the carriage unit.

With bellows

Linear tables LTS can be equipped with two sets of bellows, excluding LTS12.

The bellows are attached by means of Velcro tape.

For the same stroke length, the total length of a linear table with bellows is greater than the total length of a linear table without bellows.

Screw drive

The spindle thread has a pitch value of between 3 mm and 50 mm, see table. As standard, single nuts with an axial clearance dependent on the pitch are used. In the case of some pitch values, the ball screw drive can be supplied with preloaded double nuts.

Screw drive variants

Screw drive variants		Trapezoidal screw drive	Ball screw drive	Suffix
Pitch	3 mm	●	–	3
	4 mm	●	●	4
	5 mm	●	●	5
	6 mm	●	–	6
	8 mm	●	–	8
	10 mm	●	●	10
	20 mm	–	●	20
	40 mm	–	●	40
	50 mm	–	●	50
Single nut (cylindrical)		●	●	M
Double nut (cylindrical)		–	●	MM
Without drive (no spindle), with bellows		–	–	OA

Drive elements

For linear tables, Schaeffler also supplies components such as couplings, coupling housings, servo motors and servo controllers, *Figure 1*. The range is supplemented by servo controllers for effective drive and control of the motors.

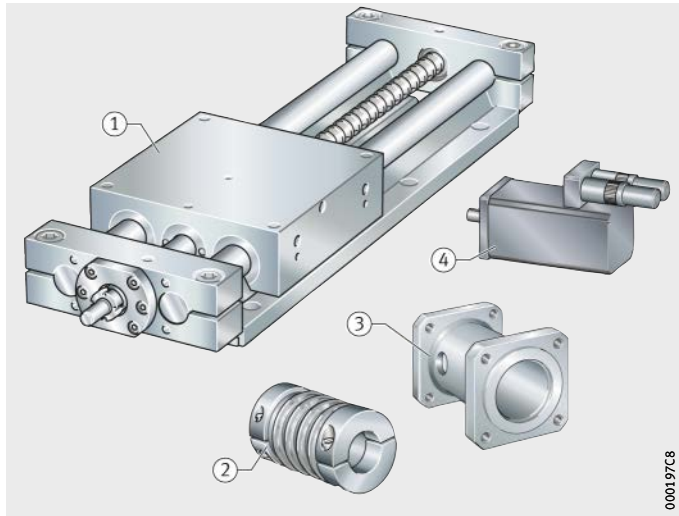

Example:
LTS
① Carriage unit
② Coupling KUP
③ Coupling housing KGEH
④ Servo motor MOT

Figure 1
Linear table
with open shaft guidance system

Proven drive combinations

The combination of the necessary drive components for vertical and horizontal applications as a function of the mass to be moved, the acceleration and the travel velocity of carriage units is shown on page 681.

The bearing load in the linear tables must be checked; it is not taken into consideration in dimensioning of the motor.
For vertical mounting, motors with a holding brake must be used.

If different loading and kinematic criteria apply, the least favourable operating conditions should be used for calculation of the drive motor and design of the gearbox, coupling and servo controller.

Special designs

Special designs are available by agreement. Examples of these are linear tables LTS with

- guidance shafts and spindles with anti-corrosion protection
- bellows resistant to welding beads
- a rolled ball screw spindle to accuracy class 25 µm per 300 mm
- a trapezoidal screw drive with a left hand thread
- special table designs according to customer requirements.

Linear tables
with open shaft guidance system

Design and safety guidelines

The information on design and safety guidelines for linear tables LTS substantially matches the information on design and safety guidelines for linear tables LTE, see page 566. The following pages describe exclusively the differences between the linear tables LTS and the linear tables LTE.

Main load direction of linear tables with linear ball bearings

The effective load rating of a linear ball bearing is dependent on the position of the load direction in relation to the position of the ball rows.

In the case of linear tables LTS, the linear ball bearings are fitted in a specific alignment. As a result, the basic load rating relating to the mounting position of the linear ball bearing is specifically defined, *Figure 2*.

LTS

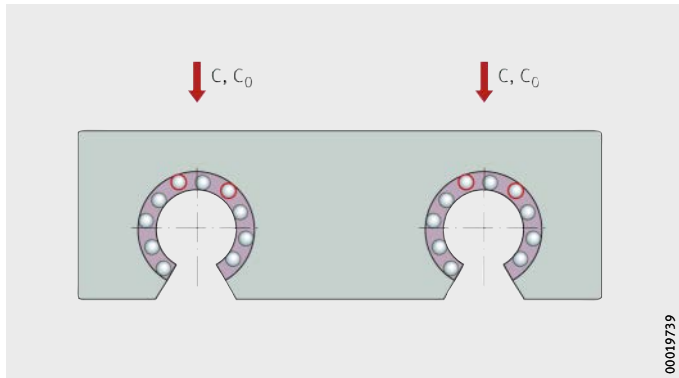

Figure 2
Main load direction

Deflection

The deflection of linear tables LTS is essentially dependent on the adjacent construction. It is not therefore possible to provide data or diagrams for the deflection.

Length calculation of linear tables

The length calculation of linear tables is based on the required effective stroke length N_H. The effective stroke length N_H must be increased by the addition of safety spacing values on both sides of the travel distance. It is only if bellows are present that the effective length B_L must be added.

The total length L_{tot} of the linear table is determined from the effective stroke length N_H, the safety spacings S, the carriage unit length L and the lengths of the end plates L_4 and L_5.

Parameters required for length calculation

G_H mm
Total stroke length

N_H mm
Effective stroke length

S mm
Safety spacing, see table, page 622

L mm
Length of carriage plate

L_{tot} mm
Total length of linear table

L_4 mm
Length of end plate

L_5 mm
Length of end plate

L_{20} mm
Screw head of end plate

L_{21} mm
Thickness of end plate

F_{BL} –
Effective length factor according to linear table type

B_L mm
Effective length of bellows

B_B mm
Length of bellows fastener.

Total stroke length G_H

The total stroke length G_H is determined from the required effective stroke length effective stroke length N_H and the safety spacings S, which must correspond to at least the spindle pitch P.

$$G_H = N_H + 2 \cdot S$$

Maximum lengths of linear tables

The maximum length of linear tables LTS without bellows is dependent on the size, the drive type and the maximum length of the bellows, see table, page 620.

In the case of a total length $L_{tot} < 2 \cdot L + 30$, not all fixing holes in the support rail will be accessible, so please consult us.

Linear tables
with open shaft guidance system

Maximum lengths without bellows

Designation	L_{tot} mm	Designation	L_{tot} mm	Designation	L_{tot} mm
LTS12	6 000	–	–	–	–
LTS16	6 000	LTS16..-TR	2 900	LTS16..-KGT	2 900
LTS20	6 000	LTS20..-TR	2 900	LTS20..-KGT	5 850
LTS25	6 000	LTS25..-TR	2 900	LTS25..-KGT	5 850
LTS30	6 000	LTS30..-TR	2 900	LTS30..-KGT	5 850
LTS40	6 000	LTS40..-TR	2 900	LTS40..-KGT	5 850
LTS50	6 000	LTS50..-TR	2 900	LTS50..-KGT	5 850

Maximum lengths with bellows

Designation	L_{tot} mm	Designation	L_{tot} mm	Designation	L_{tot} mm
LTS12	–	–	–	–	–
LTS16	3 000	LTS16..-TR	2 900	LTS16..-KGT	2 900
LTS20	3 800	LTS20..-TR	2 900	LTS20..-KGT	3 800
LTS25	4 400	LTS25..-TR	2 900	LTS25..-KGT	4 400
LTS30	5 400	LTS30..-TR	2 900	LTS30..-KGT	5 400
LTS40	6 000	LTS40..-TR	2 900	LTS40..-KGT	5 600
LTS50	6 000	LTS50..-TR	2 900	LTS50..-KGT	5 600

Total length L_{tot}

The following equations are designed for one linear table.
The parameters and their position can be found in *Figure 3* and *Figure 4* as well as in the table, page 622.

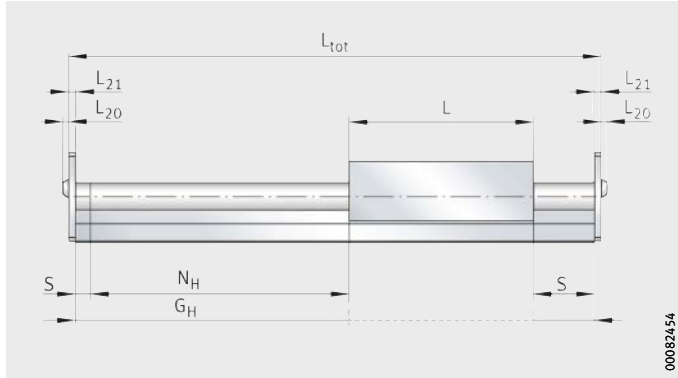

Figure 3
Length parameters for linear tables without drive

Linear table without bellows
LTS..-OA

$$L_{tot} = G_H + L + 2 \cdot L_{21}$$

Linear table with bellows
LTS..-OA

$$L_{tot} = G_H \cdot F_{BL} + L + 2 \cdot L_{21} + B_B$$

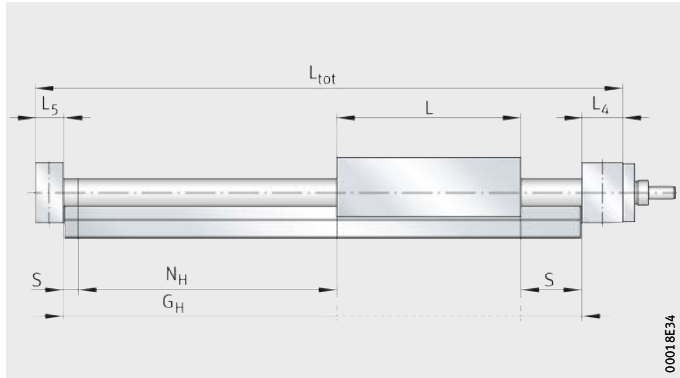

Figure 4
Length parameters for linear tables with trapezoidal or ball screw drive

Linear table without bellows
LTS..-TR, LTS..-KGT

$$L_{tot} = G_H + L + L_4 + L_5$$

Linear table with bellows
LTS..-TR, LTS..-KGT

$$L_{tot} = G_H \cdot F_{BL} + L + L_4 + L_5 + B_B$$

Linear tables
with open shaft guidance system

Length parameters

Designation	L mm	L_4 mm	L_{20} mm	L_{21} mm	L_5 mm	S mm	F_{BL}	B_B mm
LTS12-85	85	–	–	–	–	Dependent on application	–	–
LTS16-100	100		3,3	4			1,58	29
LTS20-130	130						1,43	29
LTS25-160	160						1,34	29
LTS30-180	180						1,26	29
LTS40-230	230						1,27	30
LTS50-280	280						1,22	30
LTS16-100-TR12×3	100	24	–	–	18	3	1,58	21
LTS20-130-TR16×4	130	29			20	4	1,43	21
LTS25-160-TR16×4	160	33			25	4	1,34	21
LTS30-180-TR20×4	180	38			25	4	1,26	21
LTS30-180-TR20×8	180	38			25	8	1,26	21
LTS40-230-TR24×5	230	39			30	5	1,27	22
LTS40-230-TR24×10	230	39			30	10	1,27	22
LTS50-280-TR32×6	280	42			30	6	1,22	22
LTS16-100-1204	100	24			18	4	1,58	21
LTS16-100-1205	100	24			18	5	1,58	21
LTS20-130-1605	130	29			20	5	1,43	21
LTS20-130-1610	130	29			20	10	1,43	21
LTS25-160-1605	160	33			25	5	1,34	21
LTS25-160-1610	160	33			25	10	1,34	21
LTS30-180-2005	180	38			25	5	1,26	21
LTS30-180-2010	180	38			25	10	1,26	21
LTS30-180-2020	180	38			25	20	1,26	21
LTS30-180-2050	180	38			25	50	1,26	21
LTS40-230-2505	230	39			30	5	1,27	22
LTS40-230-3210	230	42			30	10	1,27	22
LTS40-230-3220	230	42			30	20	1,27	22
LTS40-230-3240	230	42			30	40	1,27	22
LTS50-280-2505	280	39			30	05	1,22	22
LTS50-280-3210	280	42			30	10	1,22	22
LTS50-280-3220	280	42			30	20	1,22	22
LTS50-280-3240	280	42			30	40	1,22	22

Effective length of bellows

The effective length of bellows is the length occupied by the bellows in the fully compressed state. Calculation is based on the total stroke length G_H, *Figure 5*, equation and table, page 622.

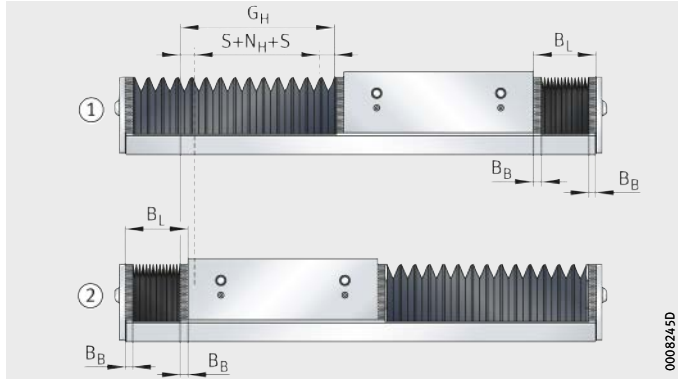

① Carriage unit against the right end stop
② Carriage unit against the left end stop

Figure 5
Effective length calculation

$$B_L = \frac{G_H \cdot (F_{BL} - 1) + B_B}{2}$$

B_L mm
Effective length of bellows

G_H mm
Total stroke length

F_{BL} –
Effective length factor according to linear table type, see table, page 622

B_B mm
Length of bellows fastener.

Calculation of hole pattern of shaft and support rail units

Shaft and support rail units are supplied as standard with a symmetrical hole pattern. If a symmetrical hole pattern is present: $a_R = a_L$. In the following calculation, the values must not be less than the value $a_{R\,min}$ ($a_{L\,min}$).

Parameters for hole pattern calculation

a_R, a_L mm
Spacing on right and left between end of shaft and nearest hole centre point, *Figure 6* and *Figure 7*
$a_{R\,min} = a_{L\,min} = 20$ mm for linear tables without bellows
$a_{R\,min} = a_{L\,min} = 24$ mm for linear tables with bellows
j_{L8} mm
Hole spacing, see dimension table
L_{tot} mm
Total length of table
n –
Number of hole pitches.

Hole pattern, without drive

The number of hole pitches n is the whole number equivalent to:

$$n = \frac{L_{tot} - 2 \cdot a_{R\,min}}{j_{L8}}$$

The spacing a_L between the end of the shaft and support rail units and the nearest hole centre point is calculated as follows:

$$a_R, a_L = 0{,}5 \cdot \left(L_{tot} - n \cdot j_{L8}\right)$$

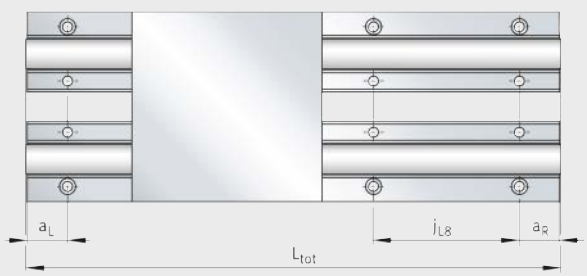

Figure 6
Spacings a_R and a_L on shaft and support rail units

Hole pattern, with drive

The number of hole pitches n is the whole number equivalent to:

$$n = \frac{L_{tot} - L_4 - L_5 - 2 \cdot a_{R\,min}}{j_{L8}}$$

The spacing a_R and a_L between the end piece and the nearest hole centre point is calculated as follows:

$$a_R, a_L = 0{,}5 \cdot \left(L_{tot} - L_4 - L_5 - n \cdot j_{L8}\right)$$

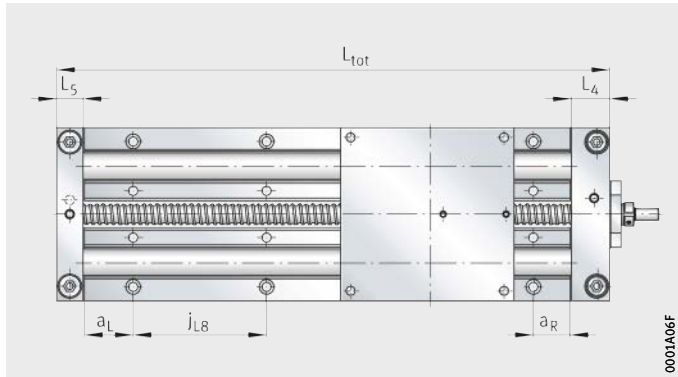

Figure 7
Spacings a_R and a_L on shaft and support rail units

In the case of a total length $L_2 < 2 \cdot L + 30$, not all fixing holes in the support rail will be accessible, so please consult us.

Mass calculation

The total mass of a linear table is calculated from the mass of the table without a carriage unit and the carriage unit.

$$m_{tot} = m_{LAW} + m_{BOL}$$

Values for mass calculation, linear table without drive

Designation	Mass	
	Carriage unit m_{LAW} ≈kg	Table without carriage unit m_{BOL} ≈kg
LTS12	0,5	$L_{tot} \cdot 0{,}003\,2 + 0{,}5$
LTS16	0,8	$L_{tot} \cdot 0{,}005\,0 + 0{,}1$
LTS20	1,6	$L_{tot} \cdot 0{,}007\,6 + 0{,}14$
LTS25	3	$L_{tot} \cdot 0{,}010\,6 + 0{,}21$
LTS30	4,4	$L_{tot} \cdot 0{,}015\,0 + 0{,}27$
LTS40	9,1	$L_{tot} \cdot 0{,}024\,8 + 0{,}42$
LTS50	16,1	$L_{tot} \cdot 0{,}037\,8 + 0{,}62$

Values for mass calculation, linear table with screw drive

Designation	Mass	
	Carriage unit[1] m_{LAW} ≈kg	Table without carriage unit m_{BOL} ≈kg
LTS16..-12	0,8	$L_{tot} \cdot 0{,}005\,8 + 0{,}46$
LTS20..-16	1,6	$L_{tot} \cdot 0{,}008\,9 + 0{,}94$
LTS25..-16	2,9	$L_{tot} \cdot 0{,}011\,9 + 1{,}54$
LTS30..-20	4,3	$L_{tot} \cdot 0{,}017\,1 + 2{,}07$
LTS40..-25	8,8	$L_{tot} \cdot 0{,}028\,1 + 3{,}46$
LTS40..-32	9,2	$L_{tot} \cdot 0{,}030\,5 + 3{,}64$
LTS50..-25	15,8	$L_{tot} \cdot 0{,}041\,1 + 4{,}94$
LTS50..-32	16,3	$L_{tot} \cdot 0{,}043\,5 + 5{,}16$

[1] Including single or preloaded double nut.

Lubrication

The information on the lubrication of LTS matches the information on the lubrication of LTE, see page 579. The only differences are in the relubrication quantities and relubrication points.

Relubrication

Relubrication should be carried out wherever possible with several partial quantities at various times instead of the complete quantity at the time of the relubrication interval. Relubrication quantities, see table. The locating and non-locating bearing in the trapezoidal screw drive are lubricated for life.

Relubrication quantities per lubrication nipple

Designation	Linear ball bearing ≈g	d_0 mm	P mm	Trapezoidal screw drive: Threaded nut ≈g	Trapezoidal screw drive: Locating bearing	Trapezoidal screw drive: Non-locating bearing	Ball screw drive: Threaded nut ≈g	Ball screw drive: Locating bearing	Ball screw drive: Non-locating bearing
LTS12	0,2	–	–	–	–	–	–	–	–
LTS16	0,3	12	3	–	Lubricated for life		–	Lubricated for life[1]	
			4	–			0,2		
LTS20	0,4	16	4	3,5			–		
			5	–			0,5		
			10	–			1,3		
LTS25	1,1	16	4	3,5			–		
			5	–			0,5		
			10	–			1,3		
LTS30	1,3	20	4	6			–		
			5	–			0,6		
			10	–			3,1		
			20	–			3		
			50	–			8,6		
LTS40	2,5	24	5	10			–		
		25	5	–			0,8		
		32	10	–			3,1		
			20	–			6,8		
			40	–			9,5		
LTS50	5,5	25	5	–			0,8		
		32	6	15			–		
			10	–			3,1		
			20	–			6,8		
			40	–			9,5		

[1] If relubrication is required due to the application, please consult us.

Relubrication points

The linear ball bearings are greased in pairs in each case via a lateral lubrication nipple in the carriage unit. The spindle nuts are supplied with lubricant via a separate lubrication nipple. The spindle bearing arrangement of the ball screw drive in the shaft support blocks is supplied in each case from above via a lubrication nipple, see *Figure 8*, table, *Figure 9*, page 629, and *Figure 10*, page 629.

LTS

① Relubrication point for locating bearing
② Relubrication point for non-locating bearing
③ Lubrication points for linear ball bearings
④ Relubrication point for spindle nut

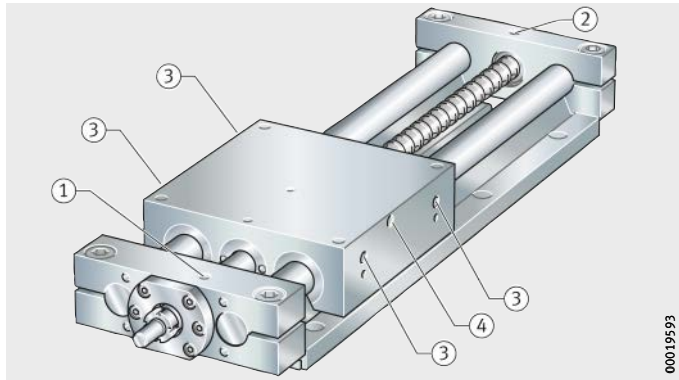

Figure 8
Lubrication points on linear table

During lubrication of actuators, all lubrication points on one longitudinal side of a carriage unit must always be provided with lubricant.

Position of relubrication points

Designation	Mounting dimensions										
	Type NIP	Without drive		With screw drive							
		2×for linear ball bearings		1×for spindle nut		2×for linear ball bearings		Locating bearing		Non-locating bearing	
		h_{56} mm	l_{56} mm	h_{56} mm	l_{56} mm	h_{57} mm	l_{57} mm	b_{77} mm	l_{77} mm	b_{78} mm	l_{78} mm
LTS12	A1	10	16	–							
LTS16		14	18	5,5	40	14	18	9,5	10,5	9	9
LTS20		15	22,5	5	53,15	15	22,5	12	10	–	10
LTS25	A2	15	29	6	53,15	20	29	10	16	–	12,5
LTS30		20	34	6	56,4[2)]	20	34	14	14,5	–	12,5
LTS40		30	40	8	56,4[3)]	30	40	13[4)]	17[5)]	–	15
LTS50	A3	40	50	10	56,4[3)]	40	50	–	17[5)]	–	15

1) In the case of a spindle 2020 and 2050, l_{56} = 52 mm.
2) In the case of a spindle 3210 and 3220, l_{56} = 86 mm.
In the case of a spindle 3240, l_{56} = 69 mm.
3) In the case of a spindle size 25, b_{77} = 0 mm.
4) In the case of a spindle size 25, l_{77} = 15,5 mm.

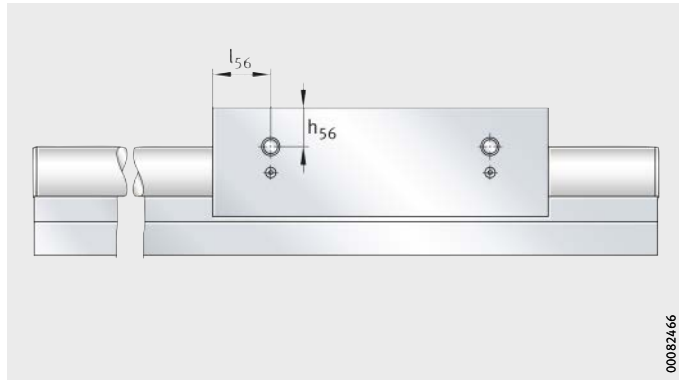

LTS
without drive

Figure 9
Lubrication points

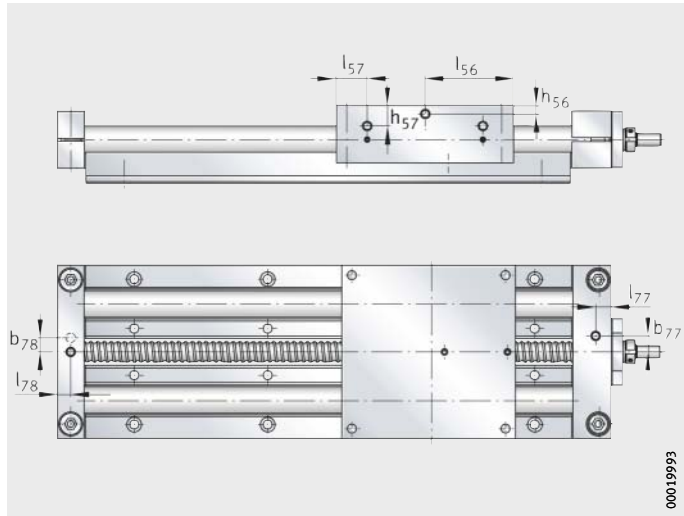

LTS
with drive

Figure 10
Position of relubrication points

Maximum permissible spindle speed

Screw drives must not be allowed to run in the critical speed range.

The critical speed is essentially dependent on the following factors:

- spindle length
- spindle diameter
- spindle bearing arrangement
- mounting method.

The carriage unit travel velocity is calculated as follows:

$$v = \frac{n \cdot P}{60 \cdot 1000}$$

v Carriage unit velocity	m/s
n Spindle speed	min^{-1}
P Spindle pitch.	mm

The carriage unit velocity v is determined from the spindle speed n and the spindle pitch P. Note the factors influencing the carriage unit velocity, such as maximum values, see page 557.

Diagram

The diagram shows the relationship for individual series and sizes between the critical speed and the spindle length, *Figure 11*.
The diagram takes account of the effective length B_L of the bellows cover. Definition of the effective length, see page 623.

LTS16
LTS20
LTS25
LTS30
LTS40
LTS50

n_{max} = maximum speed
n = spindle speed
L_2 = length of shaft and support rail unit

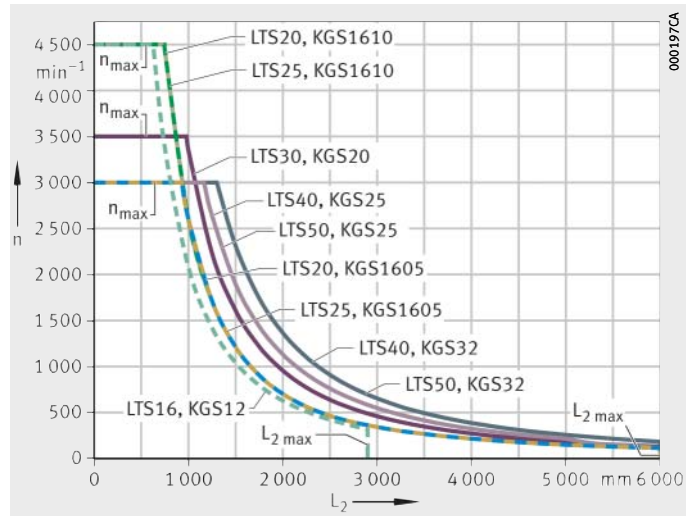

Figure 11
Maximum permissible spindle speed without spindle supports

Mounting requirements

The information on the influences of the adjacent construction of LTS matches the information on the influences of the adjacent construction of LTE, see page 585. The information on the mounting position and mounting arrangement of LTS matches the information on the mounting position and mounting arrangement of LTE, see page 586. At this point, only deviating or additional information will be covered.

Overlong tables

In the case of very long linear tables LTS, one support rail must first be aligned by means of the shaft and screw mounted in stages. The support rail arranged in parallel is aligned by moving the carriage, thus ensuring the centre spacing of the support rail.
In the case of parallel support rails, the linear table must be located by an additional form fit on the adjacent construction.
The datum support rail should be clamped against a stop, *Figure 12*.

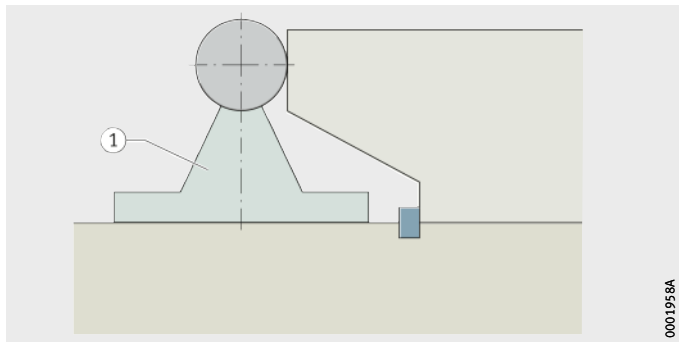

① Shaft and support rail unit

Figure 12
Alignment
of a shaft and support rail unit
by means of the shaft

Accuracy
Length tolerances

The length tolerances for linear tables can be taken from *Figure 13* and the table.

L_2 = length of shaft and support rail unit
L_{tot} = total length

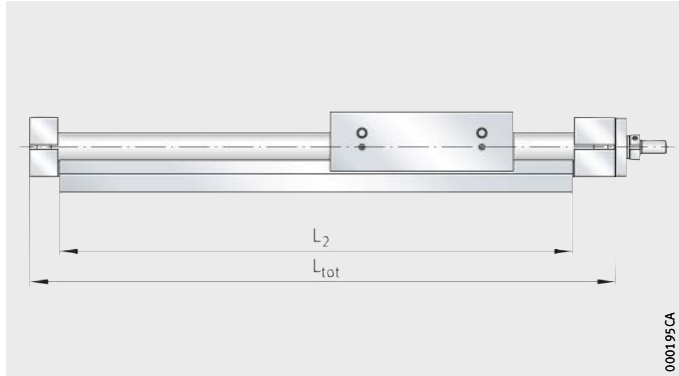

Figure 13
Length tolerances

Tolerances

Total length L_{tot} of linear tables LTS mm	Tolerance mm
$L_{tot} <$ 400	±0,5
400 ≦ $L_{tot} <$ 1 000	±0,8
1 000 ≦ $L_{tot} <$ 2 000	±1,2
2 000 ≦ $L_{tot} <$ 4 000	±2
4 000 ≦ $L_{tot} <$ 5 850	±3

Accuracy of the screw drive

Linear tables with trapezoidal screw drive are only available with a single nut with clearance, see table. The pitch accuracy is dependent on the size, see table.

Linear tables with ball screw drive are available with a single nut with clearance, see table, page 633. Where higher accuracy requirements are present, preloaded (clearance-free) double nuts are possible for many pitch values, see table, page 633.

In the case of standard linear tables with ball screw drive, the nut unit (double nut) can only be preloaded clearance-free if the spindle pitch P is less than the nominal diameter d_0 of the spindle.

Trapezoidal screw drive

Designation	Spindle			Spindle nut	
	Nominal diameter	Pitch		Single nut	
	d_0 mm	P mm	Accuracy µm each 300 mm	Suffix	Axial clearance mm
LTS16	12	3	300	M	0,4 to 0,5
LTS20	16	4	50		
LTS25	16	4	50		
LTS30	20	4	50		
		8	200		
LTS40	24	5	50		
		10	200		
LTS50	32	6	50		

Ball screw drive

Designation	Spindle			Spindle nut			
				Single nut		Double nut	
	∅ d_0 mm	P mm	Pitch accuracy µm each 300 mm	Suffix	Axial clearance mm	Suffix	Axial clearance
LTS16	12	4	50	M	0,05	–	–
LTS20	16	5	50	M	0,05	MM	Preloaded
		10				–	–
LTS25	16	5	50	M	0,05	MM	Preloaded
		10					
LTS30	20	5	50	M	0,05	MM	Preloaded
		10					
		20				–	–
		50					
LTS40	25	5	50	M	0,05	MM	Preloaded
	32	10					
		20					
		50				–	–
LTS50	25	5	50	M	0,05	MM	Preloaded
	32	10					
		20					
		50				–	–

Linear tables
with open shaft guidance system

Ordering example, ordering designation

Available designs of linear tables LTS, see table.

Available designs

Design	Linear table with open linear ball bearing guidance system		
Size	Size code		
Carriage unit length	Length	L	mm
No drive type	Without drive	●	
Type of drive	Trapezoidal screw drive	TR	
Spindle dimensions	Trapezoidal screw diameter	d_0	mm
	Spindle pitch	P	mm
Nut design	Single nut	●	
Type of drive	Ball screw drive	●	
Spindle dimensions	Ball screw diameter	d_0	mm
	Spindle pitch	P	mm
Nut design	Single nut	M	
	Double nut	MM	
Cover optional	Without bellows	0	
	With bellows	1	
Lengths	Total length	L_{tot}	mm
	Total stroke length	G_H	mm

● Standard scope of delivery.

■ Design not available.

Designation and suffixes																		
LTS																		
12	16		20		25		30				40				50			
85	100		130		160		180				230				280			
●	●		●		●		●				●				●			
■	TR		TR		TR		TR				TR				TR			
■	12		16		16		20				24				32			
■	3		4		4		4		8		5		10		6			
■	●		●		●		●		●		●		●		●		●	
■	●		●		●		●				●				●			
■	12		16		16		20				25	32			25	32		
■	04	05	05	10	05	10	05	10	20	50	05	10	20	40	05	10	20	40
■	M	M	M	M	M	M	M	M	M	M	M	M	M	M	M	M	M	M
■	■	■	MM	■	MM	MM	MM	MM	■	■	MM	MM	MM	■	MM	MM	MM	■
●	0		0		0		0				0				0			
■	1		1		1		1				1				1			

to be calculated from total stroke length, see page 619

to be calculated from effective stroke length, see page 619

Open shaft guidance system, without drive

Linear table	
with open linear ball bearing guidance system	LTS
Size code	20
Carriage plate length L	130 mm
Without drive	–
Bellows (with = 1, without = 0)	0
Total length L_{tot}	530 mm
Total stroke length G_H	400 mm

Ordering designation **LTS20-130-0/530-400**, *Figure 14*

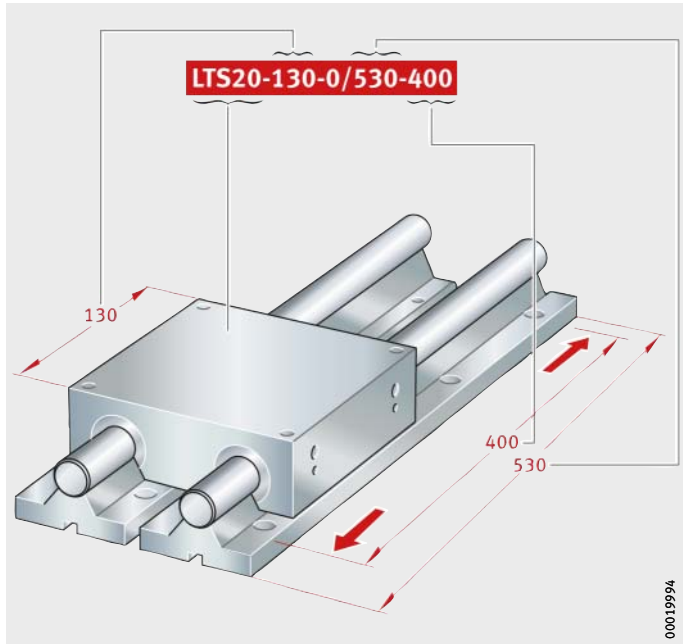

Figure 14
Ordering designation

Open shaft guidance system, with trapezoidal screw drive

Linear table	
with open linear ball bearing guidance system	LTS
Size code	40
Carriage plate length L	230 mm
Trapezoidal screw drive, d_0 = 24 mm, pitch P = 5 mm	TR24×5
Bellows (with = 1, without = 0)	1
Total length L_{tot}	842 mm
Total stroke length G_H	400 mm

Ordering designation **LTS40-230-TR24×5-1/842-400**, *Figure 15*

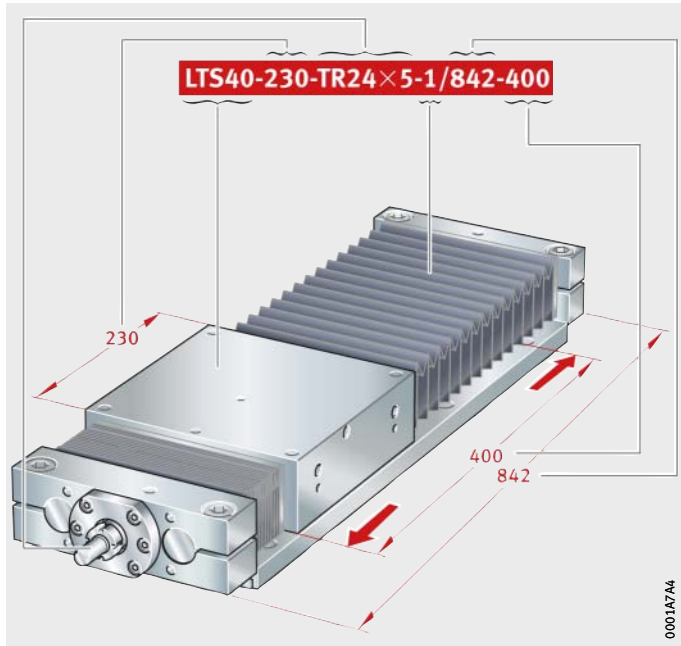

Figure 15
Ordering designation

Open shaft guidance system, with ball screw drive

Linear table	
with open linear ball bearing guidance system	LTS
Size code	30
Carriage plate length L	180 mm
Ball screw drive, d_0 = 20 mm, pitch P = 5 mm	2005
Nut (cylindrical, single nut)	M
Bellows (with = 1, without = 0)	1
Total length L_{tot}	780 mm
Total stroke length G_H	400 mm

Ordering designation **LTS30-180-2005-M-1/780-400**, *Figure 16*

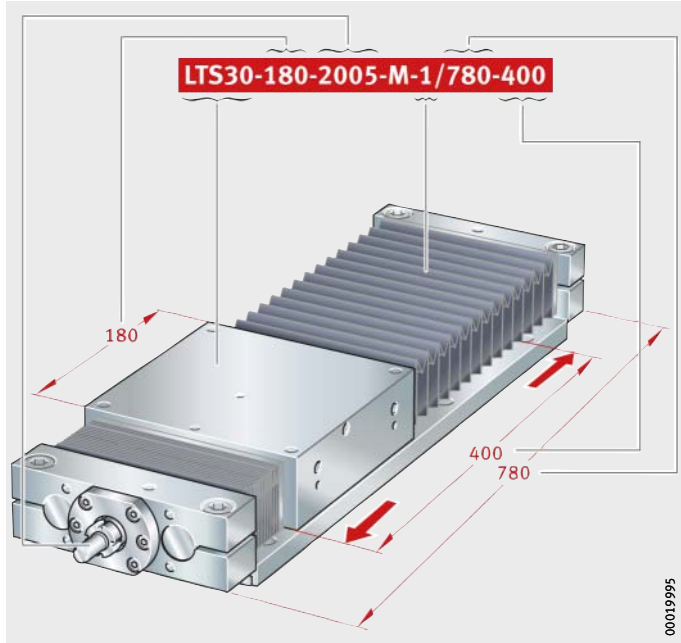

Figure 16
Ordering designation

Linear tables

Open linear ball bearing guidance system
Without drive

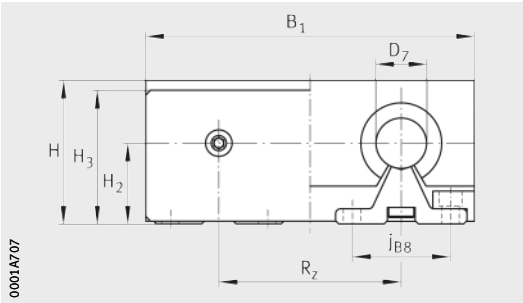

LTS · With bellows

Dimension table · Dimensions in mm

Designation	Dimensions			Mounting dimensions			
	B_1	H	L	∅ D_7 h7	h_1	H_1	H_2
LTS12-85[1]	85	40	85	12	18	30	22
LTS16-100	100	48	100	16	22	35,5	26
LTS20-130	130	57	130	20	25	42	32
LTS25-160	160	66	160	25	30	51	36
LTS30-180	180	77	180	30	35	60	42
LTS40-230	230	95	230	40	45	77	50
LTS50-280	280	115	280	50	55	93	60

For further table values, see page 652.

Calculation of length L_{tot}, see page 619.

Calculation of effective length B_L of bellows, see page 623.

1) Not available with bellows.

2) Only valid for standard bellows.

3) Location of shaft and support rail units:
Shaft and support rail units are supplied as standard with a symmetrical hole pattern.
With a symmetrical hole pattern, $a_L = a_R$.
Calculation of hole pattern, see page 624.

4) ⟨1⟩ Lubrication nipple NIP, see page 627.

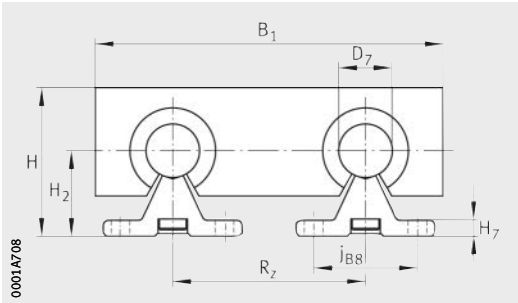

LTS · Without bellows

H_3 2)	H_7	j_{B8}	j_{L8} 3)	J_{B43}, J_{L43}	L_{20}	L_{21}	R_z
–	5	29	75	73	–	4	42
42	5	33	100	88	3,3	4	54
53	6	37	100	115	3,3	4	72
62	6	42	120	140	3,3	4	88
71	7	51	150	158	4,4	4	96
86	8	55	200	202	4,4	4	122
104	9	63	200	250	4,4	4	152

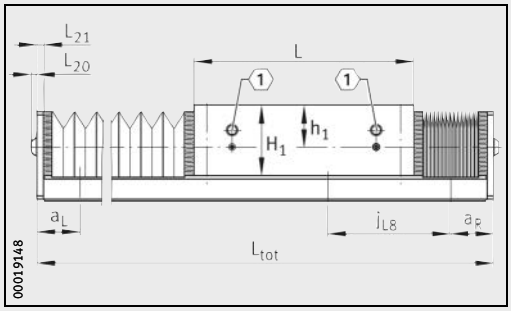

LTS · With bellows
1 4)

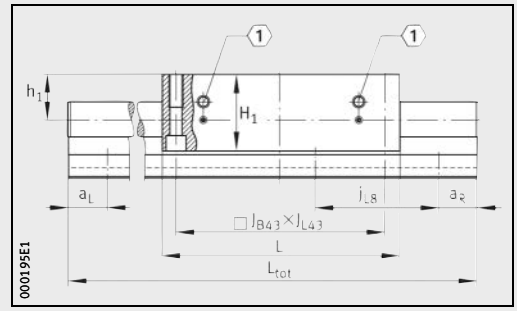

LTS · Without bellows
1 4)

Linear tables

Open linear ball bearing guidance system
With trapezoidal screw drive

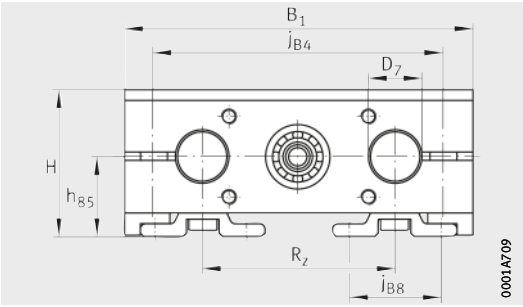

LTS16 to LTS30 · With bellows

Dimension table · Dimensions in mm

Designation	Dimensions			Mounting dimensions								
	B_1	H	L	b_{87} ±0,2	∅ d_{85} h7	∅ d_{86} g7	∅ D_7 h7	∅ D_{86} H7	G_4, G_5	G_{87}×t_{87} M×depth	h_1	h_5
LTS16-100-TR	100	48	100	44	5	–	16	17	M8	M5×12	22	16
LTS20-130-TR	130	57	130	62	9[1)]	–	20	30	M10	M6×15	25	21
LTS25-160-TR	160	66	160	64	9[1)]	–	25	30	M12	M6×15	30	26
LTS30-180-TR	180	77	180	68	10	–	30	32	M12	M6×15	35	29
LTS40-230-TR	230	95	230	68	16[1)]	66	40	–	M16	M8×18	45	36
LTS50-280-TR	280	115	280	62	16	72	50	–	M16	M8×18	55	44

For further table values, see page 652.

Calculation of length L_{tot}, see page 619.

Calculation of effective length B_L of bellows, see page 623.

1) Thread witness marks may be present on the pin.

2) Location of shaft and support rail units:
Shaft and support rail units are supplied as standard with a symmetrical hole pattern.
With a symmetrical hole pattern, $a_L = a_R$.

Calculation of hole pattern, see page 624.

3) ① Lubrication nipple NIP, see page 627.

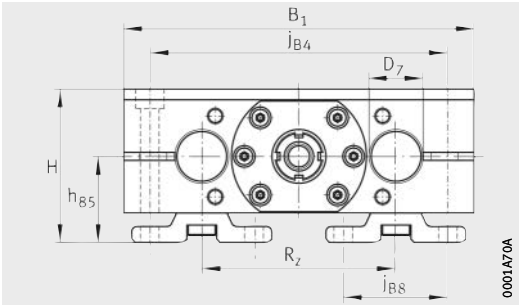

LTS40 and LTS50 · Without bellows

h_{85}	h_{87} ±0,2	H_1	H_5	j_{B4}	j_{B8}	j_{L4}	j_{L8} 2)	J_{B43}, J_{L43}	L_4	L_5	L_{85}	L_{86}	L_{88}	R_z	T_{86}
26	22	35,5	32	82	33	9	100	88	24	18	12	–	28,5	54	3
32	30	42	42	108	37	10	100	115	29	20	18	–	37	72	2,8
36	38	51	52	132	42	12,5	120	140	33	25	18	–	34,5	88	3,3
42	44	60	58	150	51	12,5	150	158	38	25	18	–	36,5	96	2,8
50	56	77	72	190	55	15	200	202	39	30	23	9,4	46	122	–
60	62	93	88	240	63	15	200	250	42	30	23	9,4	46	152	–

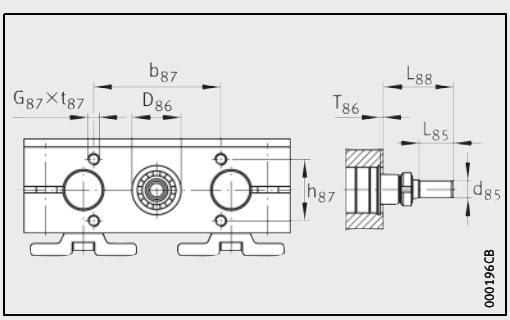

LTS16 to LTS30 · Without bellows
Drive flange, drive shaft

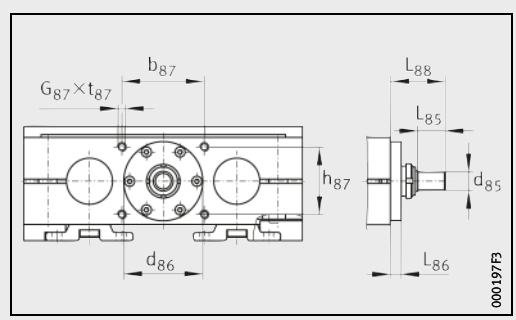

LTS40 and LTS50 · Without bellows
Drive flange, drive shaft

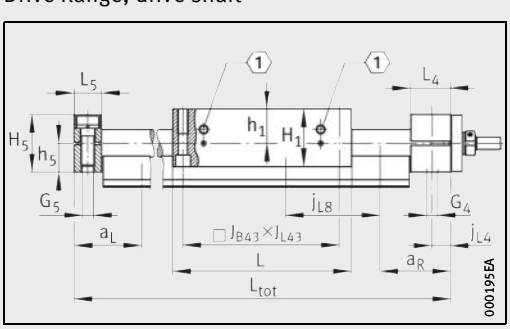

LTS · Without bellows
1 3)

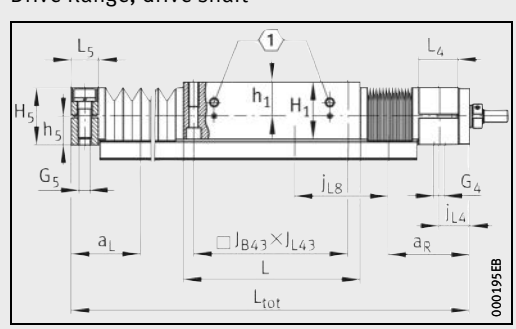

LTS · With bellows
1 3)

Linear tables

Open linear ball bearing guidance system
With trapezoidal screw drive
Drive
Performance data

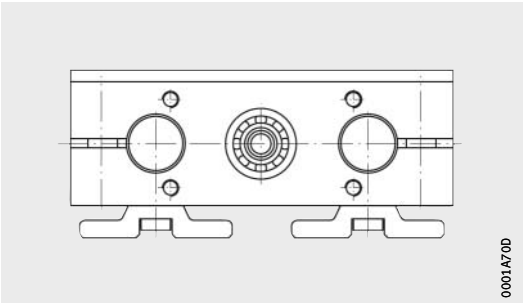

LTS16 to LTS30 · Without bellows

Performance data

Designation	Drive				
	Spindle			Spindle nut	
	Diameter d_0 mm	Pitch P mm	Mass moment of inertia kg · cm²	Design	Basic static load rating C_0 [1] N
LTS16-100-TR	12	3	0,094	Single nut	630
LTS20-130-TR	16	4	0,3	Single nut	2 250
LTS25-160-TR	16	4	0,3	Single nut	2 250
LTS30-180-TR	20	4	0,81	Single nut	2 550
		8			
LTS40-230-TR	24	5	1,65	Single nut	2 500
		10			
LTS50-280-TR	32	6	5,45	Single nut	5 530

For further table values, see page 642 and page 643.

[1] In the case of linear tables with trapezoidal screw drive,
the maximum axial load is restricted by the spindle bearing arrangement.
Please consult us regarding the loading of the trapezoidal screw drive.

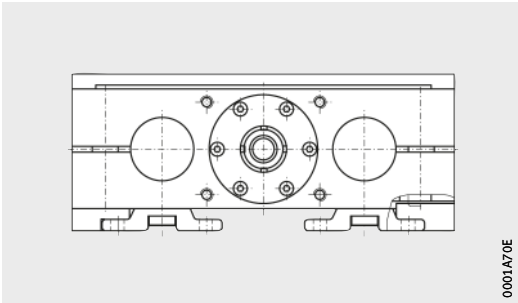

LTS40 and LTS50 · With bellows

Spindle bearing arrangement (locating bearing)		Drive torque on drive stud max.
Bearing	Basic static axial load rating C_{0a} N	Nm
30/6-2RS	630	1,5
2×7200-2RS	2 250	3
2×7200-2RS	2 250	3
2×7201-2RS	2 550	10
3303-2RS	2 500	5
3304-2RS	5 530	5

Linear tables

Open linear ball bearing guidance system
With ball screw drive

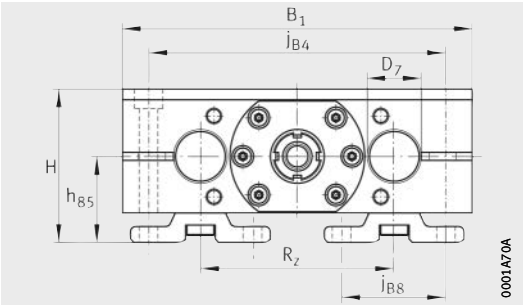

LTS · Without bellows

Dimension table · Dimensions in mm

Designation	Dimensions			Mounting dimensions								
	B_1	H	L	b_{87} ±0,2	∅ d_{74}	∅ d_{85} h7	∅ d_{86} g7	∅ D_7 h7	G_4, G_5	G_{87}×t_{87} M×depth	h_1	h_5
LTS16-100-12	100	48	100	44	38	5	24	16	M8	M5×12	22	16
LTS20-130-16	130	57	130	62	–	9[1)]	50	20	M10	M6×15	25	21
LTS25-160-16	160	66	160	64	–	9[1)]	52	25	M12	M6×15	30	26
LTS30-180-20	180	77	180	68	–	10	60	30	M12	M6×15	35	29
LTS40-230-25	230	95	230	68	–	16[1)]	66	40	M16	M8×18	45	36
LTS40-230-32						16	72					
LTS50-280-25	280	115	280	62	–	16[1)]	66	50	M16	M8×18	55	44
LTS50-280-32						16	72					

For further table values, see page 652.

Calculation of length L_{tot}, see page 619.

Calculation of effective length B_L of bellows, see page 623.

1) Thread witness marks may be present on the pin.

2) Location of shaft and support rail units:
Shaft and support rail units are supplied as standard with a symmetrical hole pattern.
With a symmetrical hole pattern, $a_L = a_R$.
Calculation of hole pattern, see page 624.

3) ⟨1⟩ Lubrication nipple NIP, see page 627.

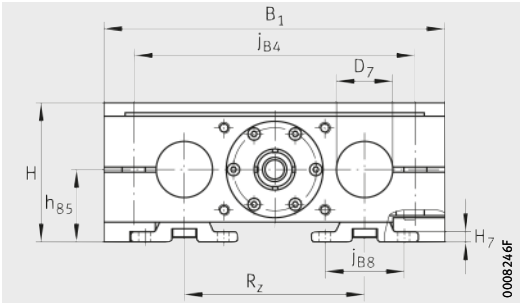

LTS · With bellows

h_{85}	h_{87} ±0,2	H_1	H_5	j_{B4}	j_{B8}	j_{L4}	j_{L8} 2)	J_{B43}, J_{L43}	L_4	L_5	L_{74}	L_{85}	L_{86}	L_{88}	R_z
26	22	35,5	32	82	33	9	100	88	24	18	6,5	28,5	1,5	28,5	54
32	30	42	42	108	37	10	100	115	29	20	–	37	8	37	72
36	38	51	52	132	42	12,5	120	140	33	25	–	34,5	7	34,5	88
42	44	60	58	150	51	12,5	150	158	38	25	–	36,5	9,4	36,5	96
50	56	77	72	190	55	15	200	202	39 42	30	–	46	9,4	46	122
60	62	93	88	240	63	15	200	250	39 42	30	–	46	9,4	46	152

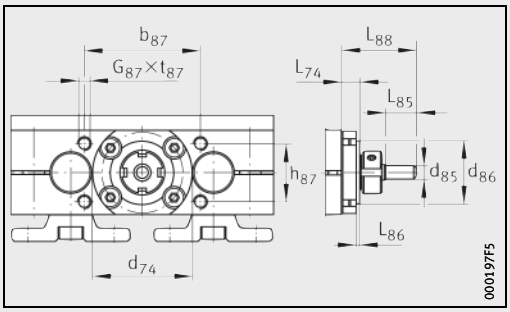

LTS20 · Without bellows
Drive flange, drive shaft

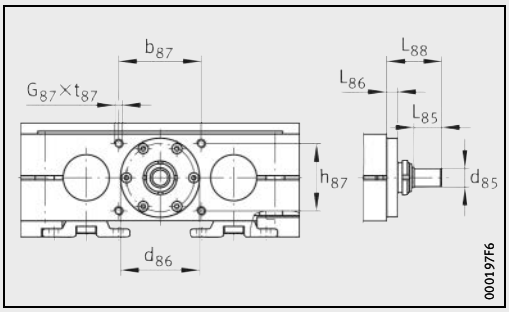

LTS20 to LTS50 · With bellows
Drive flange, drive shaft

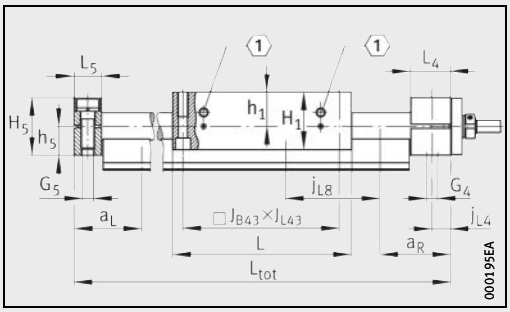

LTS · Without bellows
1 3)

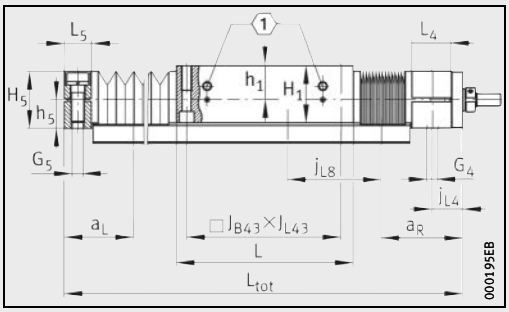

Table with bellows
1 3)

Linear tables

Open linear ball bearing guidance system
With ball screw drive
Drive
Performance data

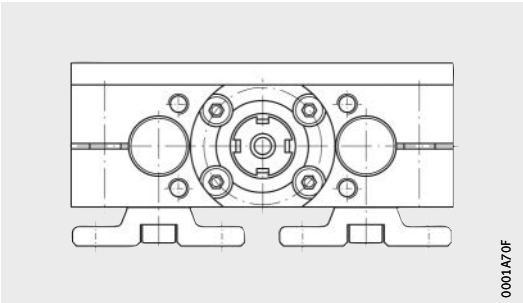

LTS16 · Without bellows

Performance data

Designation	Drive					
	Spindle			Basic load ratings of spindle nut		
	Diameter d_0 mm	Pitch P mm	Mass moment of inertia kg · cm²	Design	Basic dynamic load rating C_a [1] N	Basic static load rating C_0 [1] N
LTS16-100-12	12	4	0,11	Single nut	4 900	6 600
		5			4 400	6 800
LTS20-130-16	16	5	0,313	Single nut, double nut	9 300	13 100
		10	0,321	Single nut	15 400	26 500
LTS25-160-16	16	5	0,313	Single nut, double nut	9 300	13 100
		10	0,321		15 400	26 500
LTS30-180-20	20	5	0,846	Single nut, double nut	10 500	16 600
		10	0,846		12 700	22 100
		20	0,883	Single nut	11 600	18 400
		50	0,845		13 000	24 600
LTS40-230-25	25	5	2,25	Single nut, double nut	12 300	22 500
LTS40-230-32	32	10	6,43		33 400	54 500
		20			29 700	59 800
		40		Single nut	14 900	32 400
LTS50-280-25	25	5	2,25	Single nut, double nut	12 300	22 500
LTS50-280-32	32	10	6,43		33 400	54 500
		20			29 700	59 800
		40		Single nut	14 900	32 400

For further table values, see page 646 and page 647.

[1] Basic load ratings in accordance with DIN 69051. Due to the modified calculation algorithms in DIN 69051, the basic load ratings C_a and C_0 may differ in comparison with older data.

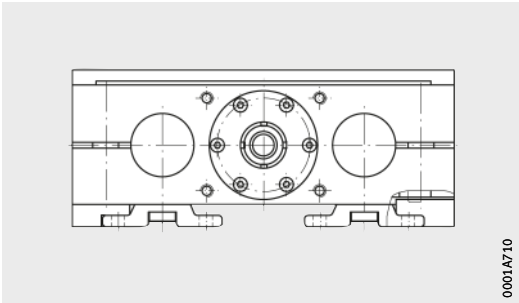

LTS20 to LTS50 · With bellows

Spindle bearing arrangement (locating bearing)			Drive torque on drive stud max.
Bearing	Basic dynamic axial load rating C_a N	Basic static axial load rating C_{0a} N	Nm
ZKLN0624.2RS-PE	6 900	8 500	1,5
ZKLN1034.2RS-PE	13 400	18 800	6
ZKLN1034.2RS-PE	13 400	18 800	6
ZKLN1545.2RS-PE	17 900	28 000	17
ZKLN1747.2RS-PE	18 800	31 000	12
ZKLN2052.2RS-PE	26 000	47 000	50
ZKLN1747.2RS-PE	18 800	31 000	12
ZKLN2052.2RS-PE	26 000	47 000	50

Linear tables

Open linear ball bearing guidance system
Performance data

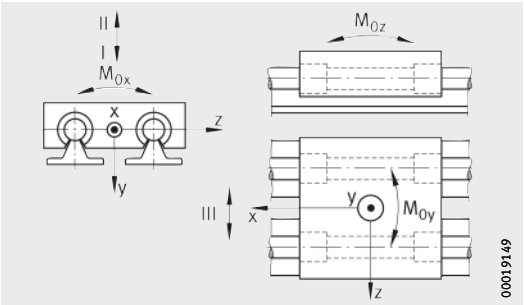

Load directions

Performance data							
Designation	Carriage unit guidance system (for each carriage unit)[1]						
	Linear ball bearing	Basic load ratings (per carriage unit)					
		Load direction I Compressive load		Load direction II Tensile load		Load direction III Lateral load	
		dyn. C N	stat. C_0 N	dyn. C N	stat. C_0 N	dyn. C N	stat. C_0 N
LTS12-85	KBO12-PP-AS	1 580	1 780	680	840	1 715	2 320
LTS16-100	KBO16-PP-AS	2 110	2 480	880	1 140	2 240	2 900
LTS16-100-TR							
LTS16-100-12							
LTS20-130	KBO20-PP-AS	4 220	5 120	2 500	3 280	3 880	4 600
LTS20-130-TR							
LTS20-130-16							
LTS25-160	KBO25-PP-AS	7 520	9 200	4 550	6 000	6 930	8 200
LTS25-160-TR							
LTS25-160-16							
LTS30-180	KBO30-PP-AS	9 760	12 000	5 930	7 600	8 970	10 700
LTS30-180-TR							
LTS30-180-20							
LTS40-230	KBO40-PP-AS	16 100	18 400	9 760	12 500	14 910	16 800
LTS40-230-TR							
LTS40-230-25							
LTS40-230-32							
LTS50-280	KBO50-PP-AS	23 480	26 400	14 200	16 800	30 320	22 600
LTS50-280-TR							
LTS50-280-25							
LTS50-280-32							

1) Design of linear ball bearing guidance systems: see Catalogue WF1, Shaft Guidance Systems.

2) These values apply if load is evenly distributed over all four linear ball bearings.
The values are single loads and apply when the shaft and support rail units are fully supported.
These must be reduced for combined loads. For design criteria of the linear guidance system,
see Catalogue WF1, Shaft Guidance Systems.

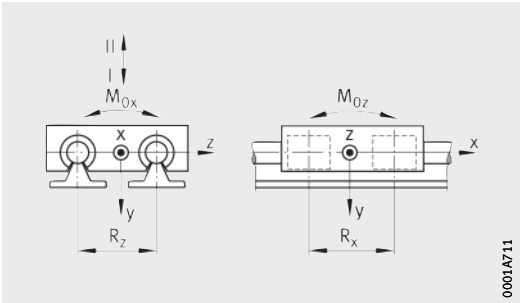

Mounting geometry of linear ball bearings

Permissible static moment ratings (per carriage unit)[2]			Mounting geometry Spacings between linear ball bearings	
$M_{0x\ per}$ Nm	$M_{0y\ per}$ Nm	$M_{0z\ per}$ Nm	R_x mm	R_z mm
23	32	21	46	42
29	50	32	55,6	54
109	130	100	74,6	72
240	312	240	88,6	88
340	450	345	98,6	96
670	960	730	134	122
1 180	1 580	1 250	163	152

Linear tables

Open linear ball bearing guidance system
Mounting of table and shaft and
support rail unit

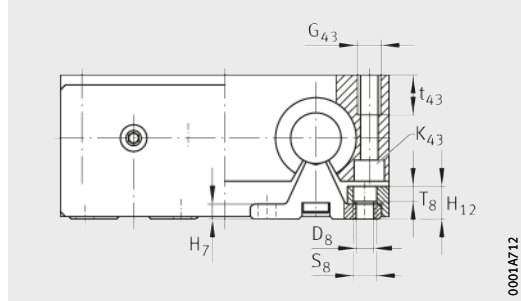

LTS · With bellows, detail of fixing screws

Dimension table · Dimensions in mm

Designation	Fixing screws						Mounting dimensions	
	Shaft and support rail units according to DIN 6912-8.8			Carriage unit according to DIN ISO 4762-8.8				
	D_8	S_8	T_8	K_{43}	G_{43}	t_{43}	H_7	H_{12}
LTS12-85	4,5	–	–	M5	M6	13	5	–
LTS16-100	5,5	10	5,6	M5	M6	13	5	11,5
LTS16-100-TR								
LTS16-100-12								
LTS20-130	6,6	11	6,1	M6	M8	18	6	13
LTS20-130-TR								
LTS20-130-16								
LTS25-160	6,6	11	6,1	M8	M10	22	6	14
LTS25-160-TR								
LTS25-160-16								
LTS30-180	9	15	7,5	M10	M12	26	7	16
LTS30-180-TR								
LTS30-180-20								
LTS40-230	9	15	7,5	M12	M16	34	8	17
LTS40-230-TR								
LTS40-230-25								
LTS40-230-32								
LTS50-280	11	17	9,5	M12	M16	34	9	21
LTS50-280-TR								
LTS50-280-25								
LTS50-280-32								

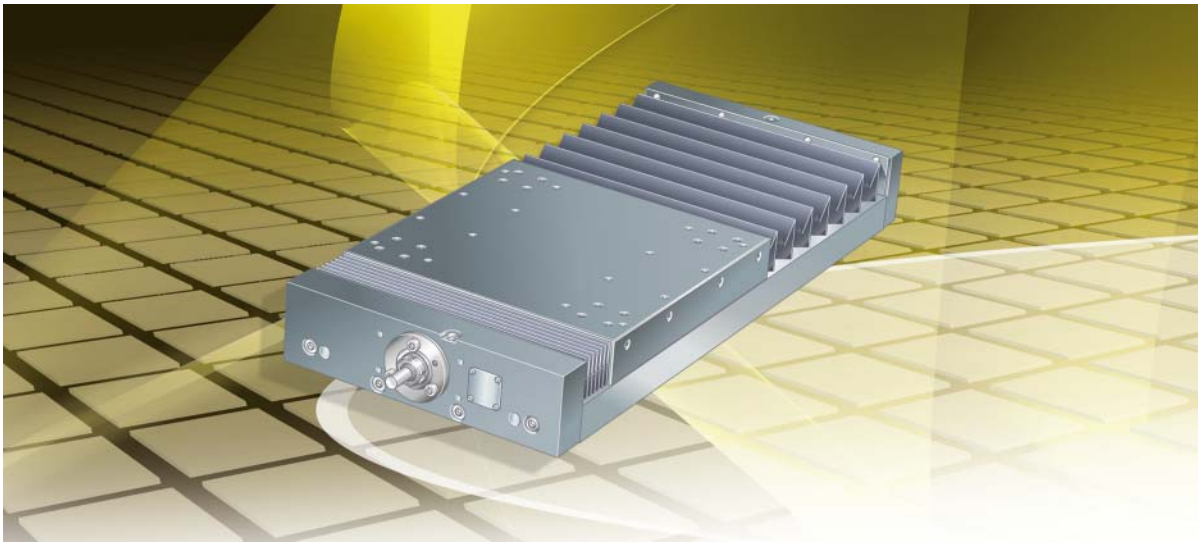

High precision linear tables

With linear recirculating ball bearing and guideway assemblies

High precision linear tables

Aluminium design

With linear recirculating ball bearing and guideway assemblies

With ball screw drive

LTP

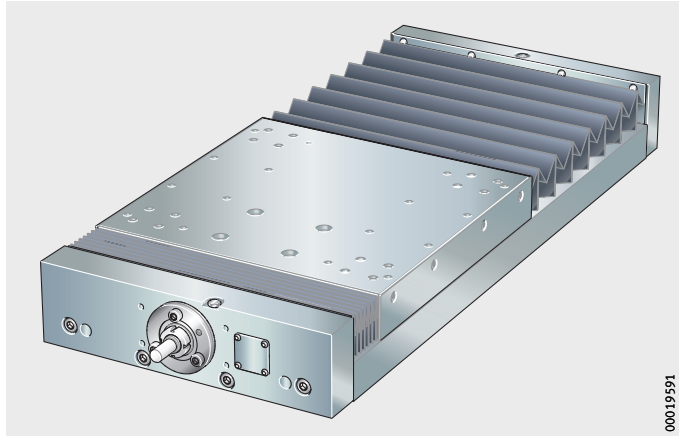

Cast iron design

With linear recirculating ball bearing and guideway assemblies

With ball screw drive

LTPG

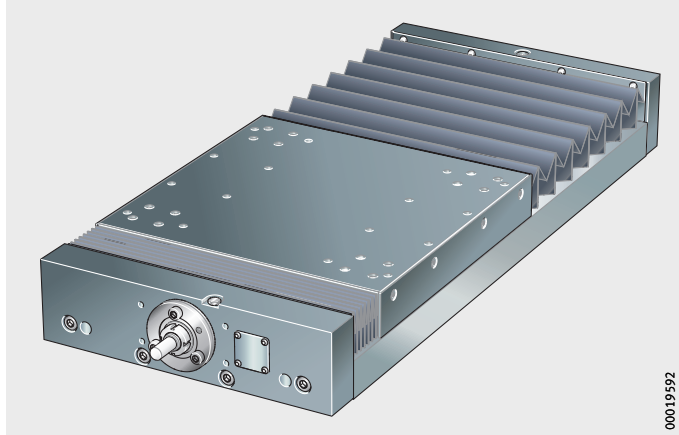

High precision linear tables

Features

High precision linear tables LTP and LTPG are particularly suitable, due to their construction and high guidance accuracy, for the precise positioning of moderate and high loads. These tables are supplied assembled.

Aluminium design

High precision linear tables LTP

High precision linear tables LTP comprise:

- a base plate made from aluminium
- two high precision two-row linear recirculating ball bearing and guideway assemblies KUE or, by agreement, two four-row linear recirculating ball bearing and guideway assemblies KUVE in the case of LTP15 or two six-row linear recirculating ball bearing and guideway assemblies KUSE in the case of LTP25 with two carriages per side. The linear recirculating ball bearing and guideway assemblies are preloaded clearance-free and run without stick-slip
- a carriage unit made from aluminium with a central lubrication system for relubricating the carriages of the linear recirculating ball bearing and guideway assemblies and the spindle nuts
- a rolled ball screw spindle with a single flanged nut F.
  In the case of some pitch values, double flanged nuts FM are possible. A double nut FM comprises a single flanged nut paired with a cylindrical single nut. Double nuts are preloaded
- a locating bearing housing made from aluminium alloy with a preloaded double row angular contact ball bearing ZKLF and a lubrication nipple
- a non-locating bearing housing made from aluminium alloy with a needle roller bearing NA and a lubrication nipple.

The spindle support bearings, carriages and spindle nuts have an initial greasing, are sealed and can be relubricated.

Cast iron design

High precision linear tables LTPG

High precision linear tables LTPG comprise a base plate, a carriage unit and a bearing housing made from cast iron. They are suitable for applications requiring increased accuracy and have good vibration behaviour. High precision linear tables LTPG differ from linear tables LTP in that they have:

- a base plate made from cast iron with ground seating and locating surfaces for the guideways
- two high precision six-row linear ball bearing and guideway assemblies KUSE with two carriages per side
- a carriage unit made from cast iron with a ground surface and seating surfaces for the carriages
- a locating bearing housing made from cast iron
- a non-locating bearing housing made from cast iron.

With bellows

High precision linear tables LTP and LTPG can be equipped with two sets of bellows.

The bellows are attached by means of screws.

For the same stroke length, the total length of a linear table with bellows is greater than the total length of a linear table without bellows.

Screw drive

The spindle thread has a pitch value of between 5 mm and 50 mm, see table. As standard, single flanged nuts with an axial clearance dependent on the pitch are used. In the case of some pitch values, the ball screw drive can be supplied with preloaded double nuts.

Screw drive variants

Screw drive variants		Suffix
Pitch	5 mm	5
	10 mm	10
	20 mm	20
	40 mm	40
	50 mm	50

Drive elements

The information on drive elements in high precision linear tables LTP and LTPG matches the information on drive elements in linear tables LTE, see page 565.

Special designs

Special designs of high precision linear tables, including the following, are available by agreement:

- with a rolled or ground ball screw spindle with an accuracy of 25 µm/300 mm
- with anti-corrosion coating of the spindle and/or linear recirculating ball bearing and guideway assemblies
- with special bellows, for example in a version resistant to welding beads
- with a trapezoidal screw drive
- with special hole patterns on the carriage unit and base plate in accordance with customer requirements.

Design and safety guidelines

The design and safety guidelines for high precision linear tables LTP and LTPG essentially match the design and safety guidelines for linear tables LTE, see page 566. The following pages describe exclusively the differences between the high precision linear tables LTP and LTPG and the linear tables LTE.

Deflection

High precision linear tables LTP and LTPG are essentially dependent on the adjacent construction. It is not therefore possible to provide data or diagrams for the deflection.

Length calculation of linear tables

The length calculation of linear tables is based on the required effective stroke length N_H. The effective stroke length N_H must be increased by the addition of safety spacing values on both sides of the travel distance. It is only if bellows are present that the effective length B_L must be added.

The total length L_{tot} of the linear table is determined from the total stroke length G_H, the lengths of the end plates L_4 and L_5 on both sides and the carriage plate length L.

Parameters for length calculation

G_H mm
Total stroke length

N_H mm
Effective stroke length

S mm
Safety spacing, see table, page 660

L mm
Total length of carriage unit

L_2 mm
Length of base plate

L_4 mm
Length of end plate

L_5 mm
Length of end plate

L_{tot} mm
Total length of linear table

B_B mm
Length of bellows fastener

B_L mm
Effective length of bellows

F_{BL} –
Effective length factor according to linear table type.

Total stroke length G_H

The total stroke length G_H is determined from the required effective stroke length N_H and the safety spacings S, which must correspond to at least the spindle pitch P.

$$G_H = N_H + 2 \cdot S$$

Maximum length of linear tables

The maximum length L_{tot} of high precision linear tables LTP and LTPG is 3 500 mm.

In the case of a total length $L_{tot} < 2 \cdot L + L_4 + L_5 + 30$, not all fixing holes in the support rail will be accessible, so please consult us.

Total length L_{tot}

The following equations are designed for one linear table. The parameters and their position can be found in *Figure 1* and the table, page 660.

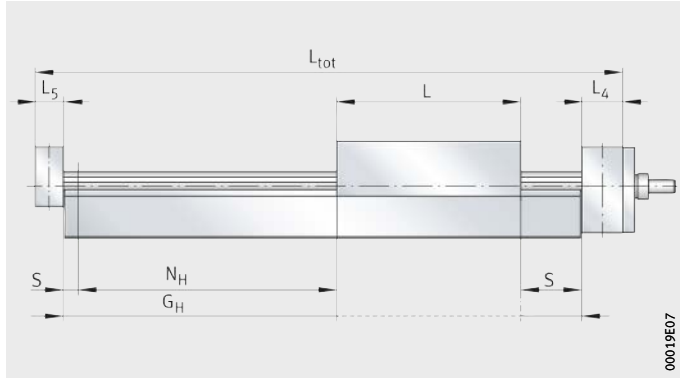

Figure 1
Length parameters
for one high precision linear table

Linear table LTP without bellows

$$L_{tot} = G_H + L + L_4 + L_5$$

Linear table LTP with bellows

$$L_{tot} = G_H \cdot F_{BL} + L + L_4 + L_5 + B_B$$

Length parameters

Designation	Spindle pitch P mm	L mm	L_4 mm	L_5 mm	S mm	F_{BL}	B_B mm
LTP15-185 LTPG15-185	5	185	35	25	5	1,35	28
	10				10		
	20				20		
	50				50		
LTP15-275 LTPG15-275	5	275	35	25	5	1,35	20
	10				10		
	20				20		
	50				50		
LTP25-325 LTPG25-325	5	325	35	30	5	1,27	20
	10				10		
	20				20		
	40				40		

Effective length of bellows

The effective length of bellows is the length occupied by the bellows in the fully compressed state. Calculation is based on the total stroke length G_H, *Figure 2*, equation and table, page 660.

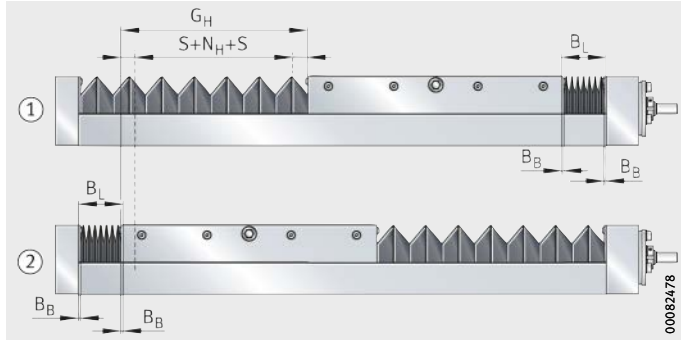

① Carriage unit against the right end stop
② Carriage unit against the left end stop

Figure 2
Effective length calculation

$$B_L = \frac{G_H \cdot (F_{BL} - 1) + B_B}{2}$$

B_L mm
Effective length of bellows

G_H mm
Total stroke length

F_{BL} –
Effective length factor according to linear table type, see table, page 660

B_B mm
Length of bellows fastener.

Calculation of hole pattern of base plates

Base plates are supplied as standard with a symmetrical hole pattern. If a symmetrical hole pattern is present: $a_R = a_L$.
In the following calculation, the values must not be less than the value $a_{R\,min}$ ($a_{L\,min}$).

Parameters for hole pattern calculation

a_R, a_L mm
Left and right spacing between the end of the base plate and the nearest hole centre point, *Figure 3* and *Figure 4*, page 663
$a_{R\,min} = a_{L\,min} = 20$ mm

j_{L8} mm
Hole spacing, see dimension table

L mm
Total length of carriage plate

L_2 mm
Total length of base plate

L_4, L_5 mm
Lengths of bearings

L_{tot} mm
Total length of linear table

J_{B8} mm
Hole spacing of inner row of holes

J_{B9} mm
Hole spacing of outer row of holes.

The number of hole pitches n is the whole number equivalent to:

$$n = \frac{L_2 - 2 \cdot a_{R\,min}}{j_{L8}}$$

The spacing a_L between the end of the base plate and the nearest hole centre point is calculated as follows:

$$a_R, a_L = 0{,}5 \cdot \left(L_2 - n \cdot j_{L8}\right)$$

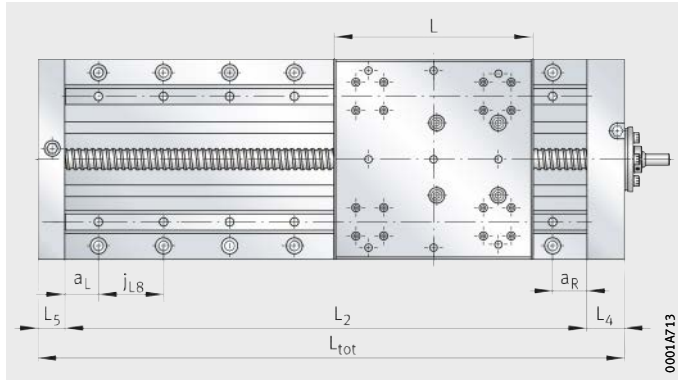

Figure 3
Spacings a_R and a_L on the base plate

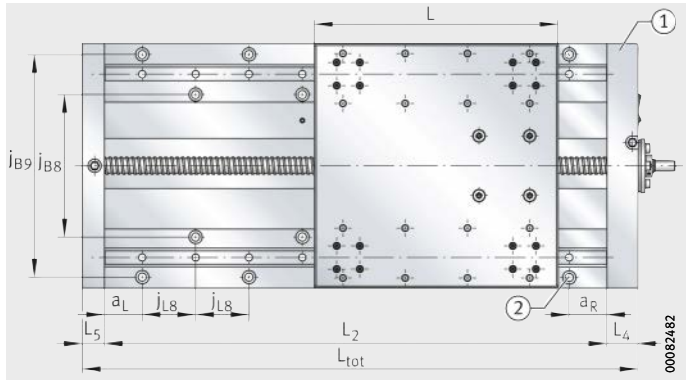

① Locating bearing side
② First hole in outer rows

Figure 4
Spacings a_R and a_L on the base plate in double rows of fixing holes

In the case of a total length $L_{tot} < 2 \cdot L + L_4 + L_5 + 30$, not all fixing holes in the base plate will be accessible, so please consult us.

In the case of double rows of fixing holes, the first fixing hole is always in the outer row on the locating bearing side, *Figure 4*.

Mass calculation

The total mass of a linear table is calculated from the mass of the table without a carriage unit and the carriage unit.

$$m_{tot} = m_{LAW} + m_{BOL}$$

Values for mass calculation, aluminium design

Designation	Mass	
	Carriage unit[1)] m_{LAW} ≈kg	Table without carriage unit m_{BOL} ≈kg
LTP15-185	3,5	$(L_{tot} - 60) \cdot 0{,}018\,1 + 2{,}6$
LTP15-275	6,4	$(L_{tot} - 60) \cdot 0{,}025\,8 + 3{,}6$
LTP25-325	12,3	$(L_{tot} - 65) \cdot 0{,}043\,3 + 6{,}2$

Values for mass calculation, cast iron design

Designation	Mass	
	Carriage unit[1)] m_{LAW} ≈kg	Table without carriage unit m_{BOL} ≈kg
LTPG15-185	6,4	$(L_{tot} - 60) \cdot 0{,}041\,9 + 5{,}5$
LTPG15-275	13,8	$(L_{tot} - 60) \cdot 0{,}052\,8 + 8{,}1$
LTPG25-325	26,5	$(L_{tot} - 65) \cdot 0{,}084\,4 + 13{,}9$

1) Including single or preloaded double nut.

Lubrication

The information on the lubrication of LTP and LTPG substantially matches the information on the lubrication of LTE, see page 579. The only differences are in the relubrication quantities and relubrication points.

Relubrication

Relubrication should be carried out wherever possible with several partial quantities at various times instead of the complete quantity at the time of the relubrication interval. Relubrication quantities, see table.

Relubrication quantity per lubrication nipple

Series	Carriage unit, carriage and ball screw drive and nut			Ball screw drive	
	d_0 mm	P mm	≈ g	Locating bearing	Non-locating bearing
LTP15-185 and LTPG15-185	20	5	2,6	Lubricated for life[1)]	Lubricated for life[1)]
		10	3,1		
		20	5		
		50	10,6		
LTP15-275 and LTPG15-275	20	5	2,6		
		10	3,1		
		20	5		
		50	10,6		
LTP25-325	32	5	5,4		
		10	7,1		
		20	10,8		
		40	13,5		
LTPG25-325	32	5	9,4		
		10	11,1		
		20	14,8		
		40	17,5		

1) If relubrication is required due to the application, please consult us.

Relubrication points

Relubrication can be carried out via a funnel type lubrication nipple in accordance with DIN 3405-A M8×1 on the side of the carriage unit, *Figure 5*. The thread of the lubrication nipple hole can also be used for connection to a central lubrication system. The carriage and the spindle nuts are supplied centrally with grease via this one lubrication nipple.

LTP
LTPG

① Relubrication point for locating bearing
② Relubrication point for non-locating bearing
③ Relubrication point for carriage unit

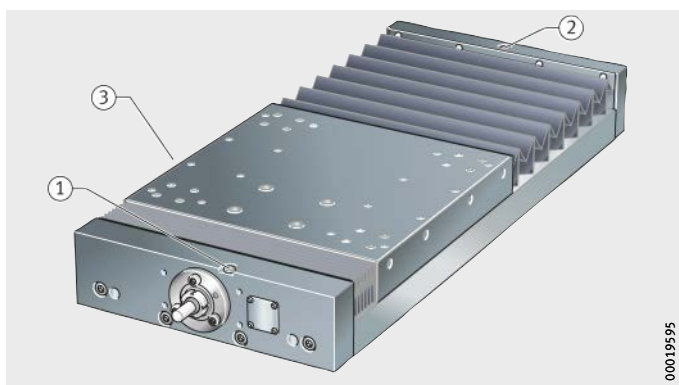

Figure 5
Lubrication points on linear table

Position of relubrication points

Designation	Mounting dimensions											
	Carriage unit				Locating bearing				Non-locating bearing			
	h_{56} mm	l_{56} mm	∅ S_{56}[1] mm	T_{56}[1] mm	b_{77} mm	l_{77} mm	∅ S_{77}[1] mm	T_{77}[1] mm	b_{78} mm	l_{78} mm	∅ S_{78}[1] mm	T_{78}[1] mm
LTP15-185	11	74,5	15	5	26	6,5	15	3,5	10	14	15	3,5
LTP15-275	9,5	135							–			
LTP25-325	10	150			26,5					17		

[1] Countersink for lubrication nipple.

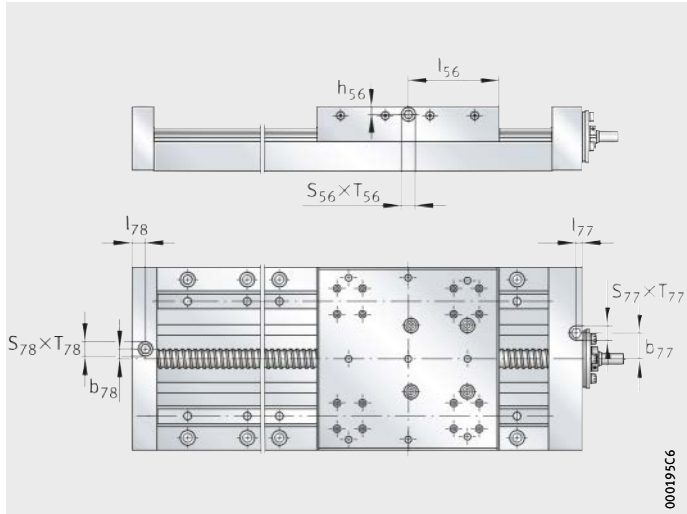

Figure 6
Lubrication points

Lubrication nipples

High precision linear tables are lubricated via funnel type lubrication nipples NIP according to DIN 3405, *Figure 7*.

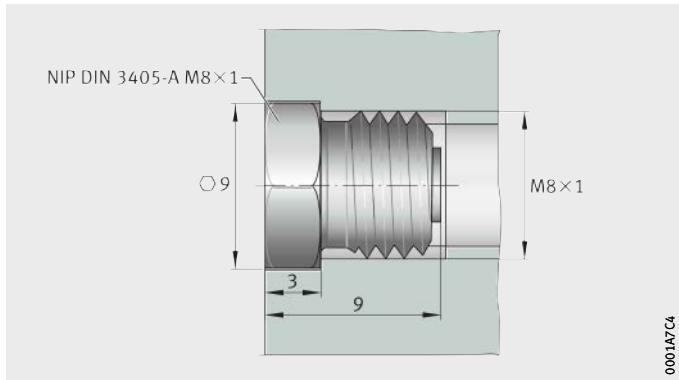

NIP DIN 3405-A M8×1

Figure 7
Funnel type lubrication nipple

Maximum permissible spindle speed

Screw drives must not be allowed to run in the critical speed range.

The critical speed is essentially dependent on the following factors:

- spindle length
- spindle diameter
- spindle bearing arrangement
- mounting method.

The carriage unit velocity v is determined from the spindle speed n and the spindle pitch P. The limit values for velocities must be observed, see page 559.

For calculation of the carriage unit velocity, the following applies:

$$v = \frac{n \cdot P}{60 \cdot 1000}$$

v Carriage unit velocity	m/s
n Spindle speed	min^{-1}
P Spindle pitch.	mm

Diagram

The diagram shows the relationship for individual series and sizes between the critical speed and the spindle length, *Figure 8*.
The diagram takes account of the effective length B_L of the bellows cover.

LTP15
LTPG15
LTP25
LTPG25

n_{max} for pitch 5 mm
n = spindle speed
L_{tot} = support shaft length

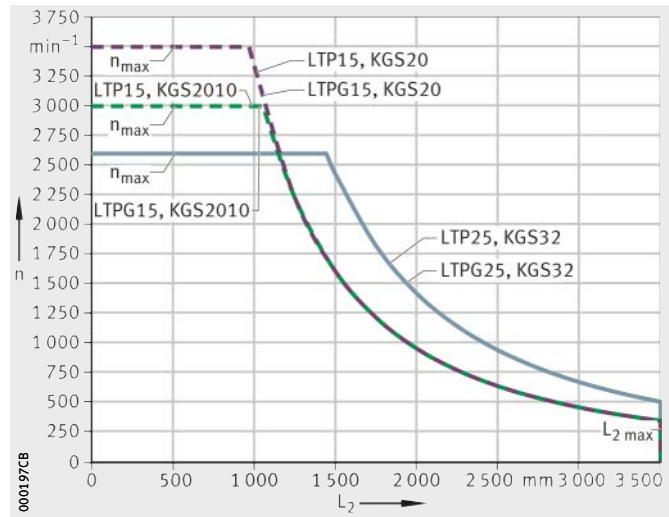

Figure 8
Maximum permissible spindle speed without spindle supports

Kinematic operating limits

Maximum velocities are determined as a function of the critical spindle speed, see table. The limiting speed of the bearings can also restrict the spindle speed and thus the velocity.

Kinematic operating limits

Series and size	Spindle		Spindle nut design		Maximum accel-eration a	Maximum velocity v	Maximum spindle speed n
	d_0 mm	P mm			m/s^2	m/s	min^{-1}
LTP15-185	20	5	F	FM	20	0,29	3 500[1)]
LTPG15-185		10	F	FM		0,5	3 000
LTP15-275		20	F	–		1,16	3 500[1)]
LTPG15-275		50	F	–		2,9	3 500[1)]
LTP25-325	32	5	F	FM	20	0,215	2 600[1)]
LTPG25-325		10	F	FM		0,43	2 600[1)]
		20	F	FM		0,86	2 600[1)]
		40	F	–		1,73	2 600[1)]

[1)] Restricted by the limiting speed of the bearing with grease lubrication.

Mounting requirements

The information on the influences of the adjacent construction of LTP matches the information on the influences of the adjacent construction of LTE, see page 585. The information on the mounting position and mounting arrangement of LTP matches the information on the mounting position and mounting arrangement of LTE, see page 586.
The only information covered here is that which is additional to or different from the information given previously.

Location

If the geometrical characteristics of high precision linear tables LTP and LTPG are to be fully utilised, mounting on completely flat supporting surfaces with low roughness values is necessary.
Linear tables LTP and LTPG are located on the adjacent construction via the base plate by means of conventional screws.
The components to be moved are also located on the carriage unit by means of conventional screws.

For location of the linear tables, all the fixing holes should be used.

If the total length is small, not all the fixing holes in the base plate may be accessible. In such cases, please consult the Schaeffler engineering service.

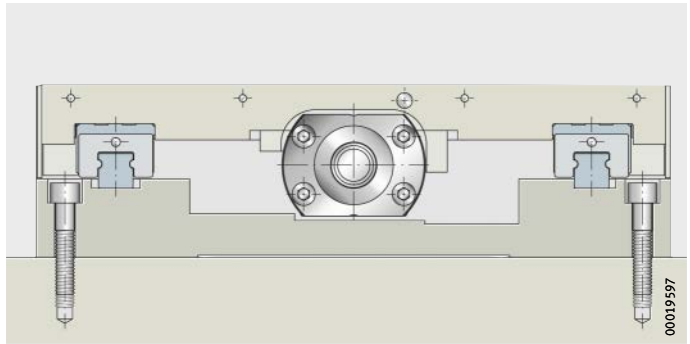

Figure 9
Location
of the high precision linear table

Accuracy

Length tolerances

Length tolerances of high precision linear tables LTP and LTPG, *Figure 10* and table.

LTP(G)

L_{tot} = total length

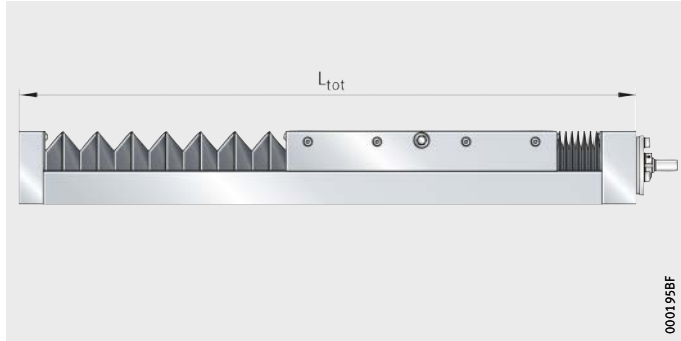

Figure 10
Length tolerances

Tolerances

Total length L_{tot} of linear tables LTP and LTPG mm	Tolerance mm
$L_{tot} \leqq 3\,500$	–1

Pitch accuracy of spindle

High precision linear tables with ball screw drive are available with a single flanged nut with clearance, see table, page 669. Where higher accuracy requirements are present, preloaded (clearance-free) double nuts are possible for many pitch values, see table, page 669.

In the case of high precision linear tables, the nut unit (double nut) can only be preloaded clearance-free if the spindle pitch P is less than the nominal diameter d_0 of the spindle.

Ball screw drive

Series and size	Spindle			Spindle nut		
	∅ d_0 mm	P mm	Pitch accuracy P µm each 300 mm	Single or double nut	Suffix	Axial clearance max. mm
LTP15-185 LTPG15-185	20	5	50	Single	F	0,05
				Double	FM	Preloaded
		10		Single	F	0,05
				Double	FM	Preloaded
		20		Single	F	0,05
		50				
LTP15-275 LTPG15-275		5		Single	F	0,05
				Double	FM	Preloaded
		10		Single	F	0,05
				Double	FM	Preloaded
		20		Single	F	0,05
		50				
LTP25-325 LTPG25-325	32	5		Single	F	0,05
				Double	FM	Preloaded
		10		Single	F	0,05
				Double	FM	Preloaded
		20		Single	F	0,05
				Double	FM	Preloaded
		40		Single	F	0,05

Parallelism values

The parallelism values T_1 and T_2 are based on an ideally flat locating surface. Geometrical deviations of the locating surface are not taken into consideration.

The values in the diagrams are standard accuracies, *Figure 12* and *Figure 13*, page 670.

During measurement of the values, the following conditions apply:

- T_1 and T_2 measured with a clamped base plate, where all fixing holes must be used
- parallelism in a longitudinal direction measured at the centre of the carriage unit.

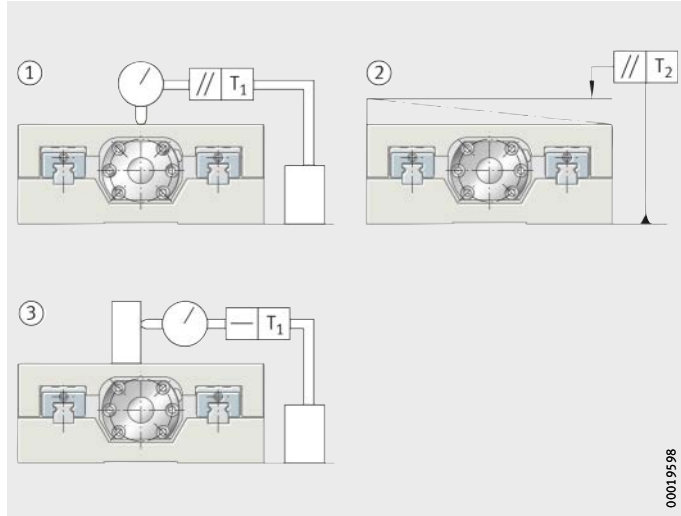

① Parallelism in longitudinal direction
② Parallelism in transverse direction
③ Straightness in longitudinal direction

Figure 11
Parallelism and straightness

LTP

① Accuracy

l = length

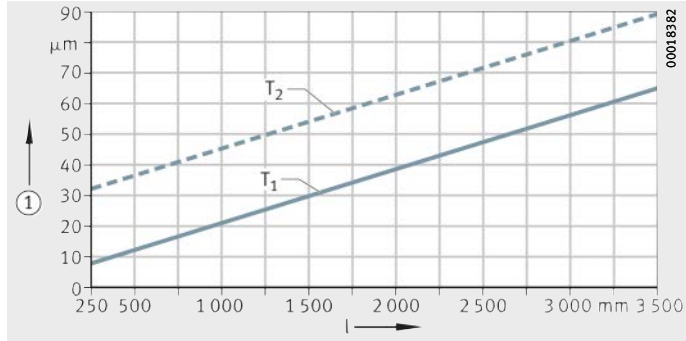

Figure 12
Accuracy values

LTPG

① Accuracy

l = length

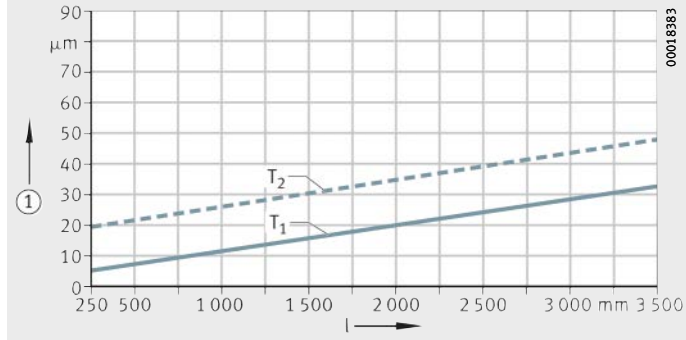

Figure 13
Accuracy values

Ordering example, ordering designation

Available designs of high precision linear tables LTP and LTPG, see table.

Available designs

Design	Linear table with linear recirculating ball bearing and guideway assemblies and ball screw drive		
Size	Size code		
Carriage plate length	Length	L	mm
Drive type with	Ball screw drive	●	
Spindle dimensions	Ball screw diameter	d_0	mm
	Spindle pitch	P	mm
Nut design	Single nut	F	
	Double nut	FM	
Cover optional	Without bellows	0	
	With bellows	1	
Lengths	Total length	L_{tot}	mm
	Total stroke length	G_H	mm

● Standard scope of delivery.

■ Design not available.

Designation and suffixes LTP and LTPG											
15				15				25			
185				275				325			
●				●				●			
20				20				32			
05	10	20	50	05	10	20	50	05	10	20	40
F	F	F	F	F	F	F	F	F	F	F	F
FM	FM	■	■	FM	FM	■	■	FM	FM	FM	■
0				0				0			
1				1				1			
to be calculated from total stroke length, see page 660											
to be calculated from effective stroke length, see page 660											

High precision linear table with ball screw drive

High precision linear table with linear recirculating ball bearing and guideway assemblies and ball screw drive (aluminium design)	LTP
Size code	25
Carriage plate length L	325
Ball screw drive, d_0 = 32 mm, pitch P = 10 mm	3210
Nut (preloaded, double nut)	FM
Bellows (with = 1, without = 0)	1
Total length L_{tot}	918 mm
Total stroke length G_H	400 mm

Ordering designation **LTP25-325-3210-FM-1/918-400**, *Figure 14*

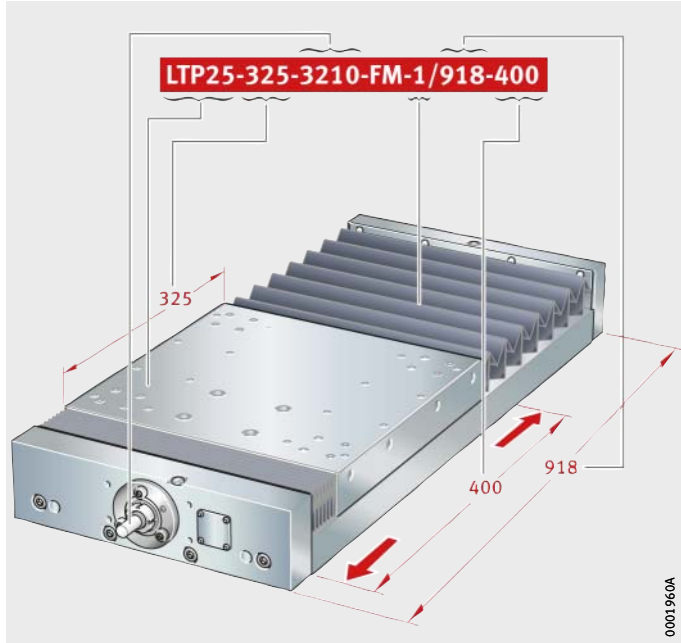

Figure 14
Ordering designation

High precision linear table with ball screw drive

High precision linear table with linear recirculating ball bearing and guideway assemblies and ball screw drive (cast iron design)	LTPG
Size code	25
Carriage plate length L	325
Ball screw drive, d_0 = 32 mm, pitch P = 10 mm	3210
Nut (preloaded, double nut)	FM
Bellows (with = 1, without = 0)	1
Total length L_{tot}	918 mm
Total stroke length G_H	400 mm

Ordering designation **LTPG25-325-3210-FM-1/918-400**, *Figure 15*

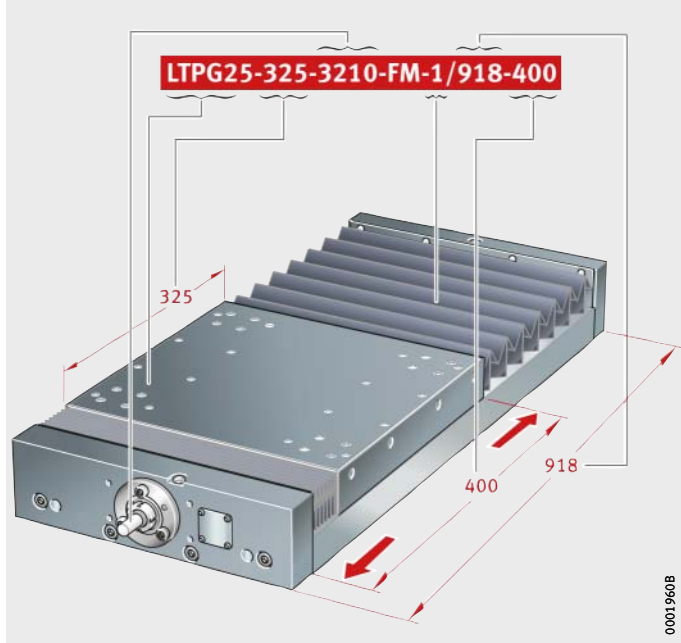

Figure 15
Ordering designation

High precision linear tables

Linear recirculating ball bearing and guideway assemblies with ball screw drive
Aluminium design (LTP)
Cast iron design (LTPG)

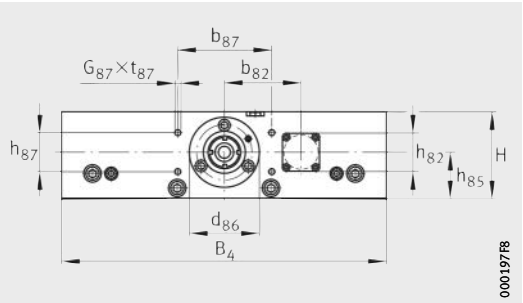

LTP, LTPG

Dimension table · Dimensions in mm

Designation		Dimensions			Mounting dimensions						
Aluminium	Cast iron	B_4	H	L	b_{82}	b_{87} ±0,2	∅ d_{85} h6	∅ d_{86} −0,01	G_{87}×t_{87} M×depth	h_{82}	h_{85}
LTP15-185	**LTPG15-185**	185	75	185	–	80	11	60	M6×15	–	40
LTP15-275	**LTPG15-275**	275		275	65					31	
LTP25-325	**LTPG25-325**	325	100	325	75	96	19	75	M8×20	31	52

Calculation of length L_{tot}, see page 659.

Calculation of effective length B_L of bellows, see page 661.

1) Location of high precision linear tables:
High precision linear tables are supplied as standard with a symmetrical hole pattern.
With a symmetrical hole pattern, $a_L = a_R$.

Calculation of the hole pattern, see page 662.

2) ① Lubrication nipples, see page 665.

Dimension table (continued) · Dimensions in mm

Designation		Fixing screws				
Aluminium	Cast iron	Table base plate			Carriage unit	
		D_8	S_8	T_8	G_{43}	t_{43}
LTP15-185	**LTPG15-185**	9	15	11	9×M8	16
LTP15-275	**LTPG15-275**				16×M8	
LTP25-325	**LTPG25-325**	11	18	13,5	25×M8	16

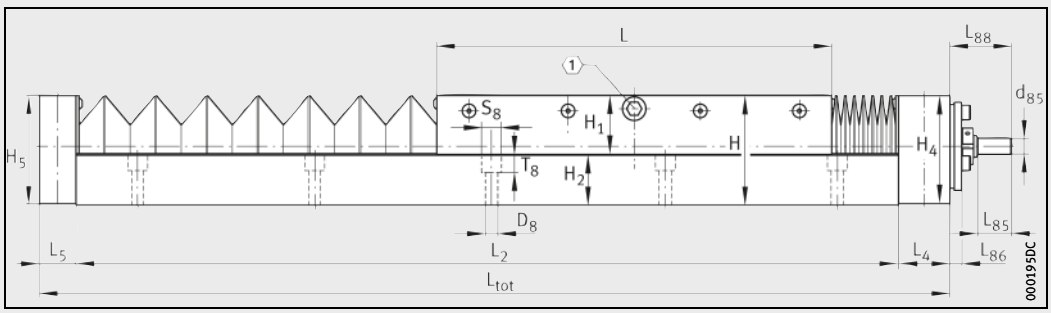

LTP, LTPG · With bellows
① 2)

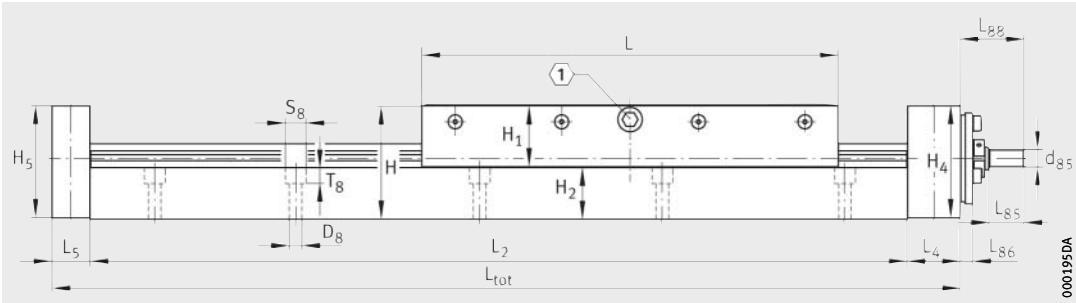

LTP, LTPG · Without bellows
1 2)

h_{87} ±0,2	H_1	H_2	H_4, H_5	j_{B8}	j_{B9}	j_{B43}	j_{B44}	j_{L8} 1)	j_{L43}	j_{L44}	L_4	L_5	L_{85}	L_{86}	L_{88}	R_z
33	40,5	34	74,5	160	–	164	–	60	120	–	35	25	23	8	42	116
				160	250	140	252		70	210						206
44	55,5	44	99,5	185	298	140	280	60	140	280	35	30	40	9	65	240

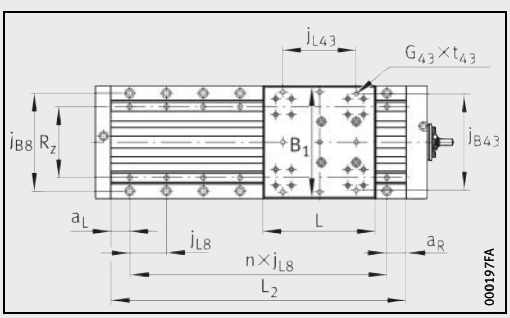

LTP15-185, LTPG15-185 · Without bellows

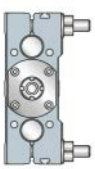

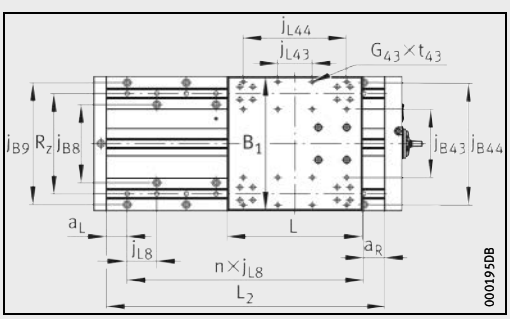

LTP15-275, LTPG15-275 · Without bellows

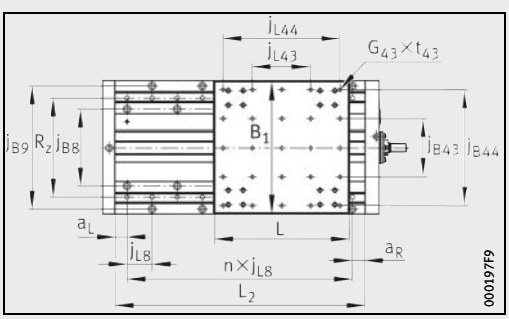

LTP25-325, LTPG25-325 · Without bellows

High precision linear tables

Linear recirculating ball bearing and guideway assemblies with ball screw drive
Performance data

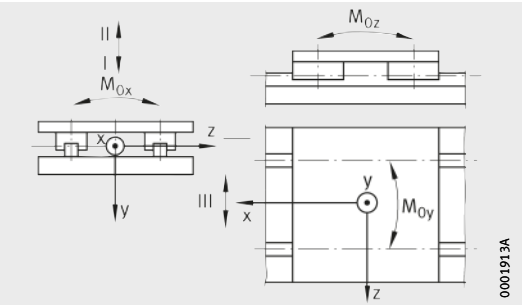

Load directions

Performance data

Designation	Carriage guidance system												
	Carriages	Basic load ratings						Permissible static moment ratings[1]			Mounting geometry Spacings between carriages		
		Load direction I Compressive load		Load direction II Tensile load		Load direction III Lateral load							
		dyn. C N	stat. C_0 N	dyn. C N	stat. C_0 N	dyn. C N	stat. C_0 N	$M_{0x\ per}$ Nm	$M_{0y\ per}$ Nm	$M_{0z\ per}$ Nm	R_x mm	R_y mm	R_z mm
LTP(G)15-185	4× KWE15-H	17 150	36 800	17 150	36 800	17 150	36 800	1 830	1 480	1 480	118	34,5	116
LTP(G)15-275	4× KWE15-H	17 150	36 800	17 150	36 800	17 150	36 800	3 400	3 000	3 000	198	34,5	206
LTP25-325	4× KWE25-H	47 200	83 600	47 200	83 600	47 200	83 600	16 600	8 800	8 800	220	48	240
LTPG25-325	4× KWSE25-H	73 900	268 000	60 400	172 000	56 200	184 000	18 000	10 400	10 400	220	45,3	240

1) The values are single loads and apply when the underside of the table is fully supported. These must be reduced for combined loads. For design criteria of the linear guidance system, see Catalogue PF1, Monorail Guidance Systems.

2) Basic load ratings in accordance with DIN 69051. Due to the modified calculation algorithms in DIN 69051, the basic load ratings C_a and C_0 may differ in comparison with older data.

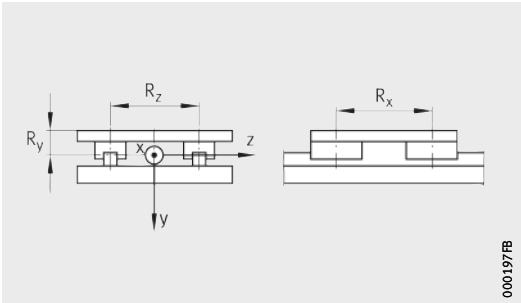

Mounting geometry of carriages

Drive									
Spindle			Spindle nut			Spindle bearing arrangement (locating bearing)			
Diameter d_0	Pitch P	Mass moment of inertia	Design	Basic dynamic load rating C_a 2)	Basic static load rating C_0 2)	Bearing			Drive torque on drive stud max.
							dyn. C_a	stat. C_{0a}	
mm	mm	kg · cm²		N	N		N	N	Nm
20	5	0,85	Single nut, double nut	10 500	16 600	ZKLF1560.2RS	17 900	28 000	15
	10			12 700	22 100				
	20		Single nut	11 600	18 400				
	50			13 000	24 600				
20	5	0,85	Single nut, double nut	10 500	16 600	ZKLF1560.2RS	17 900	28 000	15
	10			12 700	22 100				
	20		Single nut	11 600	18 400				
	50			13 000	24 600				
32	5	6,43	Single nut, double nut	21 500	49 300	ZKLF2575.2RS	27 500	55 000	50
	10			33 400	54 500				
	20			29 700	59 800				
	40		Single nut	14 900	32 400				
32	5	6,43	Single nut, double nut	21 500	49 300	ZKLF2575.2RS	27 500	55 000	50
	10			33 400	54 500				
	20			29 700	59 800				
	40		Single nut	14 900	32 400				

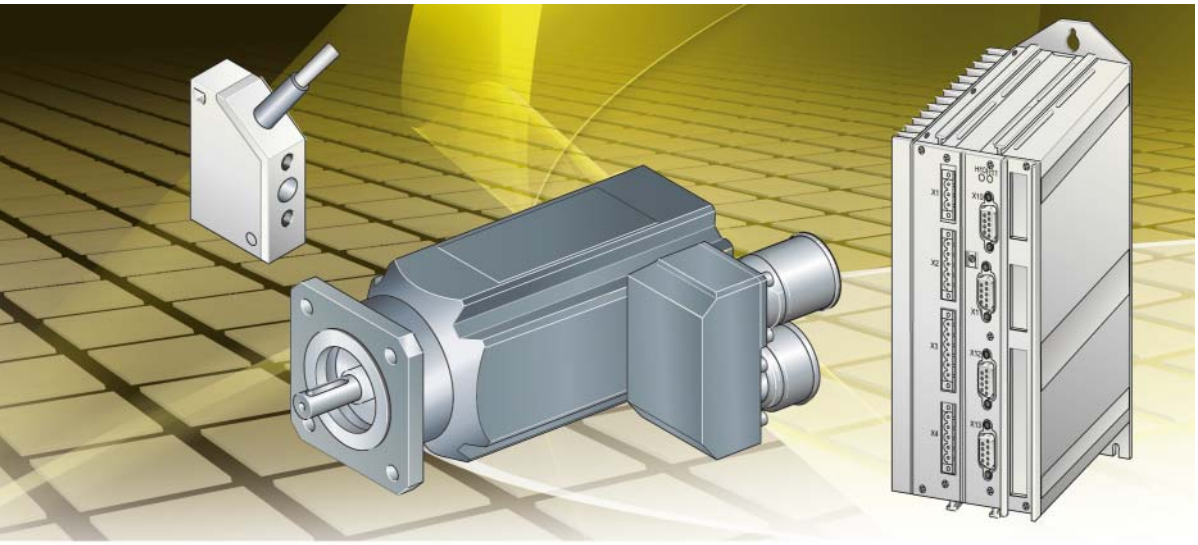

Electric drives and controls

Digital servo controllers
Motors and gearboxes
Inductive proximity switches

Electric drives and controls

Digital servo controllers can be used for all linear actuators and linear tables. The system components provide the operator with a user-friendly and economical control system for a large number of positioning tasks.

The use of purely digital control gives advantages such as reduced cost, rapid commissioning, the absence of analogue functional elements, the prevention of drift problems, the digital setting of control parameters and thus absolute reproducibility as well as powerful control algorithms and an optimised control structure.

The highly dynamic and innovative brushless servo motors offer, in comparison with conventional brushless servo motors, more compact motor dimensions within the individual sizes, a specific torque higher by up to 30%, a very low moment of rotor inertia and high acceleration values.

The servo motors are also available with the options of a holding brake and absolute encoder. They can be combined with planetary gearboxes having low clearance and high torsional stiffness to give a highly compact motor/gearbox unit for increased drive torque values.

Inductive proximity switches are available in a very wide range of designs to match the linear actuators. These elements are supplied with special fixing material or are fitted in profiled slots in the linear actuators.

This gives the user an economical, appropriate solution for his positioning task.

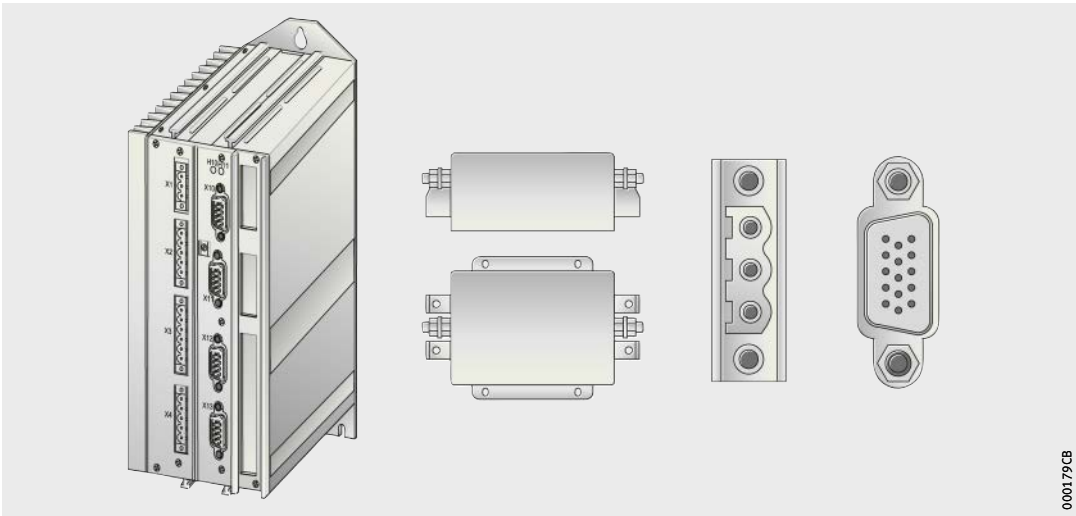
000179CB

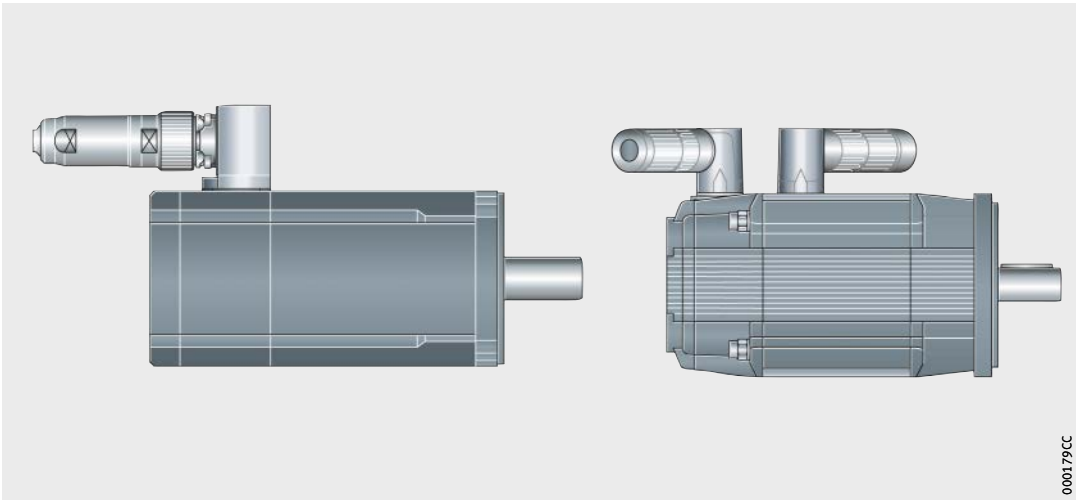
000179CC

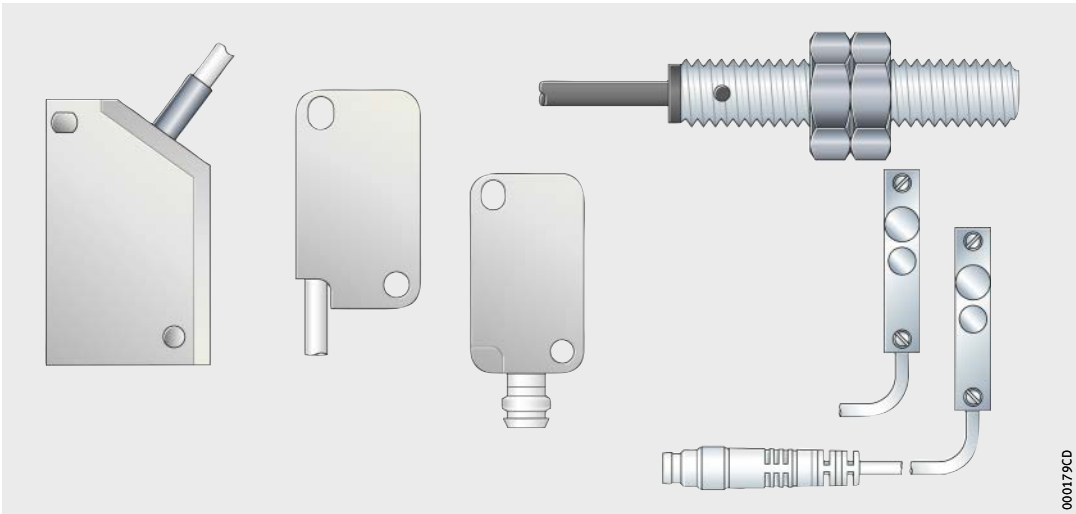
000179CD

Proven drive combinations

Proven drive combinations

Depending on the requirements and operating conditions, a range of possible solutions and combinations in drives and controls can be achieved for linear actuators. Based on our experience, we have established a selection of proven drive combinations for linear actuators, see page 686 to page 709.

The bearing load occurring in the linear actuator must always be checked for the stated mass.

Characteristics

The tables of proven drive combinations contain the following characteristics for the linear actuators:

Symbol	Description
m_{max}	Maximum mass on the carriage unit
v_{max}	Maximum permissible acceleration
a_{max}	Maximum travel velocity of the carriage unit
v_m	Mean velocity of the carriage unit for a stroke length of 2,5 m

Servo motors

The information and designations stated are as follows:

- The designation of the servo motor with an absolute measuring system is always stated (MOT..-SINCOS).
- In the case of servo motors with a holding brake, the designation is (MOT..-BR-SINCOS).
- In the case of servo motors with a resolver, the designation SINCOS is omitted.

Servo controllers

The information and designations stated are as follows:

- The servo controller in the design with digital inputs and outputs is always stated.
- The necessary design of the servo controller must still be selected accordingly, see page 724.
- Servo controllers with the option of a Profibus have the designation (STUNG..-PRO).

Subdivision of drive combinations

The tables of drive combinations for linear actuators are subdivided as follows:

- actuators with track roller guidance system, see page 686
- clamping actuators with track roller guidance system, see page 690
- actuators with track roller guidance system and integrated gearbox, see page 692
- actuators with ball screw drive, see page 700
- actuators with monorail guidance system and toothed belt drive, see page 706.

Proven drive combinations

Actuators with track roller guidance system and toothed belt drive

Designation	Position	Characteristics				Combination
		m_{max} kg	v_{max} m/s	a_{max} m/s^2	v_m m/s	Planetary gearbox
MLF32..-ZR	Horizontal	4	2,4	10	1,95	GETR-PLE60-70-4
		4	2,4	10	1,95	GETR-PLN70-4
		19	1,2	10	1,13	GETR-PLE60-70-8
		19	1,2	10	1,13	GETR-PLN70-8
		22	2,4	10	1,95	GETR-PLN70-90-4
		45	1,2	10	1,13	GETR-PLN70-8
	Vertical	4	2,4	10	1,95	GETR-PLE60-70-4
		4	2,4	10	1,95	GETR-PLN70-4
		16	2,4	10	1,95	GETR-PLN70-90-4
		19	1,2	10	1,13	GETR-PLN70-8
MLF52..-ZR	Horizontal	5	3,2	10	2,3	GETR-PLN70-90-4
		20	3,4	10	2,3	GETR-PLN90-115-4
		30	0,8	10	0,8	GETR-PLN70-16
		35	4	10	2,45	GETR-PLN90-115-4
		35	1,7	10	1,5	GETR-PLN70-8
		65	4	10	2,5	GETR-PLN115-142-4
		85	1,7	10	1,5	GETR-PLN90-115-8
	Vertical	5	3,2	10	2,3	GETR-PLN70-90-4
		20	1,6	10	1,5	GETR-PLN70-90-8
		20	3,4	10	2,3	GETR-PLN90-115-4
		30	4	10	2,45	GETR-PLN90-115-4
		30	0,8	5	0,8	GETR-PLN70-16
		45	4	10	2,5	GETR-PLN115-4-142
		55	0,8	5	0,8	GETR-PLN90-16
		70	1,5	5	1,3	GETR-PLN90-115-8
MLFI20..-ZR	Horizontal	4	4	10	2,1	–
	Vertical	4	4	10	2,1	–
MLFI25..-ZR	Horizontal	4	4,5	10	2,1	–
		20	1,1	10	1,05	GETR-PLE60-70-4
		20	1,1	10	1,05	GETR-PLN70-4
	Vertical	5	4,5	20	3,2	–
		20	1,1	10	1,05	GETR-PLE60-70-4
		20	1,1	10	1,05	GETR-PLN70-4

[1] Alternatively: KGEH.MKUE25-ZR-60/68/M5-3600.

Coupling	Coupling housing	Servo motor	Servo controller
KUP-560-56-16H7/20H7	KGEH32/43000-MLF-ZR	MOT-SMH60-C7-SINCOS	STUNG-CPX3S025-RS-I-O
KUP-560-56-16H7/20H7	KGEH32/36000-MLF-ZR	MOT-SMH60-C7-SINCOS	STUNG-CPX3S025-RS-I-O
KUP-560-56-16H7/20H7	KGEH32/43000-MLF-ZR	MOT-SMH60-C7-SINCOS	STUNG-CPX3S025-RS-I-O
KUP-560-56-16H7/20H7	KGEH32/36000-MLF-ZR	MOT-SMH60-C7-SINCOS	STUNG-CPX3S025-RS-I-O
KUP-560-56-16H7/20H7	KGEH32/36000-MLF-ZR	MOT-SMH82-SINCOS	STUNG-CPX3S025-RS-I-O
KUP-560-56-16H7/20H7	KGEH32/36000-MLF-ZR	MOT-SMH82-SINCOS	STUNG-CPX3S025-RS-I-O
KUP-560-56-16H7/20H7	KGEH32/43000-MLF-ZR	MOT-SMHA60-C7-BR-SINCOS	STUNG-CPX3S025-RS-I-O
KUP-560-56-16H7/20H7	KGEH32/36000-MLF-ZR	MOT-SMHA60-C7-BR-SINCOS	STUNG-CPX3S025-RS-I-O
KUP-560-56-16H7/20H7	KGEH32/36000-MLF-ZR	MOT-SMHA82-BR-SINCOS	STUNG-CPX3S025-RS-I-O
KUP-560-56-16H7/20H7	KGEH32/36000-MLF-ZR	MOT-SMHA60-C7-BR-SINCOS	STUNG-CPX3S025-RS-I-O
KUP-560-56-16H7/20H7	KGEH52/43300-MLF-ZR	MOT-SMH82-SINCOS	STUNG-CPX3S025-RS-I-O
KUP-560-56-20H7/22H7	KGEH52/49100-MLF-ZR	MOT-SMH100-SINCOS	STUNG-CPX3S063-RS-I-O
KUP-560-56-16H7/20H7	KGEH52/43300-MLF-ZR	MOT-SMH60-C7-SINCOS	STUNG-CPX3S025-RS-I-O
KUP-560-56.1-20H7/22H7	KGEH52/49100-MLF-ZR	MOT-MH105-SINCOS	STUNG-CPX3S075-RS-I-O
KUP-560-56-16H7/20H7	KGEH52/43300-MLF-ZR[1)]	MOT-SMH82-SINCOS	STUNG-CPX3S025-RS-I-O
KUP-560-66-20H7/32H7	KGEH52/43400-MLF-ZR	MOT-MH145-45-08-SINCOS	STUNG-CPX3S075-RS-I-O
KUP-560-66-20H7/22H7	KGEH52/49100-MLF-ZR	MOT-SMH100-SINCOS	STUNG-CPX3S063-RS-I-O
KUP-560-56-16H7/20H7	KGEH52/43300-MLF-ZR	MOT-SMHA82-BR-SINCOS	STUNG-CPX3S025-RS-I-O
KUP-560-56-16H7/20H7	KGEH52/43300-MLF-ZR	MOT-SMHA82-BR-SINCOS	STUNG-CPX3S025-RS-I-O
KUP-560-56-20H7/22H7	KGEH52/49100-MLF-ZR	MOT-SMHA100-BR-SINCOS	STUNG-CPX3S063-RS-I-O
KUP-560-56.1-20H7/22H7	KGEH52/49100-MLF-ZR	MOT-MHA105-BR-SINCOS	STUNG-CPX3S075-RS-I-O
KUP-560-56-16H7/20H7	KGEH52/43300-MLF-ZR	MOT-SMHA60-C7-SINCOS	STUNG-CPX3S025-RS-I-O
KUP-560-66-20H7/32H7	KGEH52/43400-MLF-ZR	MOT-MHA145-45-08-BR-SINCOS	STUNG-CPX3S075-RS-I-O
KUP-560-66-20H7/22H7	KGEH52/49100-MLF-ZR	MOT-SMHA82-BR-SINCOS	STUNG-CPX3S025-RS-I-O
KUP-560-66-20H7/22H7	KGEH52/49100-MLF-ZR	MOT-SMHA100-BR-SINCOS	STUNG-CPX3S063-RS-I-O
KUP-50-25-10H7/11H7	KGEH20/36000-MLFI-ZR	MOT-SMH60-C7-SINCOS	STUNG-CPX3S025-RS-I-O
KUP-50-25-10H7/11H7	KGEH20/36000-MLFI-ZR	MOT-SMHA60-BR-SINCOS	STUNG-CPX3S025-RS-I-O
KUP-34-40-12H7/14H7	KGEH25/36100-MLFI-ZR	MOT-SMH82-SINCOS	STUNG-CPX3S025-RS-I-O
KUP-50-40-2-12H7/16H7	KGEH25/36000-MLFI-ZR	MOT-SMH60-C7-SINCOS	STUNG-CPX3S025-RS-I-O
KUP-50-40-2-12H7/16H7	KGEH25/43000-MLFI-ZR	MOT-SMH60-C7-SINCOS	STUNG-CPX3S025-RS-I-O
KUP-34-40-12H7/14H7	KGEH25/36100-MLFI-ZR	MOT-SMHA82-BR-SINCOS	STUNG-CPX3S025-RS-I-O
KUP-50-40-2-12H7/16H7	KGEH25/36000-MLFI-ZR	MOT-SMH60-C7-SINCOS	STUNG-CPX3S025-RS-I-O
KUP-50-40-2-12H7/16H7	KGEH25/43000-MLFI-ZR	MOT-SMH60-C7-SINCOS	STUNG-CPX3S025-RS-I-O

Actuators with track roller guidance system and toothed belt drive (continued)

Designation	Position	Characteristics				Combination
		m_{max} kg	v_{max} m/s	a_{max} m/s^2	v_m m/s	Planetary gearbox
MLFI50..-ZR	Horizontal	10	1,4	10	1,2	GETR-PLN70-8
		10	2,75	10	2,1	GETR-PLN70-90-4
		35	2,5	10	2	GETR-PLN90-115-4
		50	0,7	5	0,7	GETR-PLN70-16
		65	1,4	10	1,3	GETR-PLN70-90-8
		150	1,25	5	1,1	GETR-PLN90-115-8
	Vertical	10	1,4	10	1,2	GETR-PLN70-8
		10	2,75	10	2,1	GETR-PLN70-90-4
		30	1,4	10	1,3	GETR-PLN70-90-8
		30	0,7	5	0,7	GETR-PLN70-16
		35	2,5	10	2	GETR-PLN90-115-4
		60	3,0	10	2,2	GETR-PLN115-142-4
		75	0,7	5	0,7	GETR-PLN70-90-16
		75	1,25	5	1,1	GETR-PLN90-115-8
MLFI140..-3ZR	Horizontal	60	2	10	1,7	GETR-PLN90-115-4
		75	1	5	0,95	GETR-PLN70-90-8
		90	0,5	5	0,95	GETR-PLN70-16
		250	1	5	0,95	GETR-PLN90-115-8
	Vertical	20	1	5	0,95	GETR-PLN70-90-8
		30	2	5	1,75	GETR-PLN90-115-4
		55	2,5	10	2	GETR-PLN90-115-4
		70	1	5	0,95	GETR-PLN90-115-8
		75	0,5	5	0,5	GETR-PLN90-16
		150	1,25	5	1,12	GETR-PLN115-8
		200	0,5	2,5	0,46	GETR-PLN90-115-16
MLFI200..-3ZR	Horizontal	15	2,8	10	2,1	GETR-PLN90-115-4
		40	1,5	5	1,25	GETR-PLN90-16
		40	4	10	2,5	GETR-PLN90-115-4
		65	4	10	2,5	GETR-PLN115-142-4
		100	1,4	10	1,2	GETR-PLN90-115-8
		125	4	10	2,5	GETR-PLN115-142-4
		175	0,75	5	0,7	GETR-PLN90-16
		200	4	10	2,5	GETR-PLN115-142-8
	Vertical	10	2,8	5	1,7	GETR-PLN90-115-4
		25	4	10	2,5	GETR-PLN90-115-4
		40	0,75	5	0,7	GETR-PLN90-16
		40	4	10	2,5	GETR-PLN115-142-4
		50	1,4	5	1,2	GETR-PLN90-115-8
		120	2	5	1,2	GETR-PLN115-142-8
		150	0,7	2,5	0,65	GETR-PLN90-115-16

Coupling	Coupling housing	Servo motor	Servo controller
KUP-560-56-16H7/20H7	KGEH50/43300-MLFI-ZR	MOT-SMH60-C7-SINCOS	STUNG-CPX3S025-RS-I-O
KUP-560-56-16H7/20H7	KGEH50/43300-MLFI-B-ZR	MOT-SMH82-SINCOS	STUNG-CPX3S025-RS-I-O
KUP-560-56-20H7/22H7	KGEH50/43100-MLFI-B-ZR	MOT-SMH100-SINCOS	STUNG-CPX3S063-RS-I-O
KUP-560-56-16H7/20H7	KGEH50/43300-MLFI-B-ZR	MOT-SMH60-C7-SINCOS	STUNG-CPX3S025-RS-I-O
KUP-560-56-16H7/20H7	KGEH50/43300-MLFI-B-ZR	MOT-SMH82-SINCOS	STUNG-CPX3S025-RS-I-O
KUP-560-56.1-20H7/22H7	KGEH50/43100-MLFI-B-ZR	MOT-SMH100-SINCOS	STUNG-CPX3S063-RS-I-O
KUP-560-56-16H7/20H7	KGEH50/43300-MLFI-ZR	MOT-SMH60-C7-BR-SINCOS	STUNG-CPX3S025-RS-I-O
KUP-560-56-16H7/20H7	KGEH50/43300-MLFI-B-ZR	MOT-SMHA82-BR-SINCOS	STUNG-CPX3S025-RS-I-O
KUP-560-56-16H7/20H7	KGEH50/43300-MLFI-B-ZR	MOT-SMHA82-BR-SINCOS	STUNG-CPX3S025-RS-I-O
KUP-560-56-16H7/20H7	KGEH50/43300-MLFI-B-ZR	MOT-SMH60-C7-BR-SINCOS	STUNG-CPX3S025-RS-I-O
KUP-560-56-20H7/22H7	KGEH50/43100-MLFI-B-ZR	MOT-SMHA100-BR-SINCOS	STUNG-CPX3S063-RS-I-O
KUP-560-66-20H7/32H7	KGEH50/43110-MLFI-B-ZR	MOT-MHA145-45-08-BR-SINCOS	STUNG-CPX3S075-RS-I-O
KUP-560-56.1-16H7/20H7	KGEH50/43300-MLFI-B-ZR	MOT-SMHA82-BR-SINCOS	STUNG-CPX3S025-RS-I-O
KUP-560-56.1-20H7/22H7	KGEH50/43100-MLFI-B-ZR	MOT-SMHA100-BR-SINCOS	STUNG-CPX3S063-RS-I-O
KUP-560-56.1-22H7/25H7	KGEH32/43300-MLF-ZR	MOT-SMH100-SINCOS	STUNG-CPX3S063-RS-I-O
KUP-560-56-16H7/25H7	KGEH32/36000-MLF-ZR	MOT-SMH82-SINCOS	STUNG-CPX3S025-RS-I-O
KUP-560-56-16H7/25H7	KGEH32/36000-MLF-ZR	MOT-SMH60-C7-SINCOS	STUNG-CPX3S025-RS-I-O
KUP-560-56.1-22H7/25H7	KGEH32/43300-MLF-ZR	MOT-SMH100-SINCOS	STUNG-CPX3S063-RS-I-O
KUP-560-56-16H7/25H7	KGEH32/36000-MLF-ZR	MOT-SMHA82-BR-SINCOS	STUNG-CPX3S025-RS-I-O
KUP-560-56-22H7/25H7	KGEH32/43300-MLF-ZR	MOT-SMHA100-BR-SINCOS	STUNG-CPX3S063-RS-I-O
KUP-560-56.1-22H7/25H7	KGEH32/43300-MLF-ZR	MOT-MHA105-BR-SINCOS	STUNG-CPX3S075-RS-I-O
KUP-560-56.1-22H7/25H7	KGEH32/43300-MLF-ZR	MOT-SMHA100-BR-SINCOS	STUNG-CPX3S063-RS-I-O
KUP-560-56.1-22H7/25H7	KGEH32/43300-MLF-ZR	MOT-SMHA82-BR-SINCOS	STUNG-CPX3S025-RS-I-O
KUP-560-66.1-25H7/32H7	KGEH15/43200-MDKUE-ZR	MOT-MHA105-BR-SINCOS	STUNG-CPX3S075-RS-I-O
KUP-560-56.2-22H7/25H7	KGEH32/43100-MLF-ZR	MOT-SMHA100-BR-SINCOS	STUNG-CPX3S063-RS-I-O
KUP-560-66-22H7/32H7	KGEH52/49100-MLF-ZR	MOT-SMHA100-BR-SINCOS	STUNG-CPX3S063-RS-I-O
KUP-560-66-22H7/32H7	KGEH52/49100-MLF-ZR	MOT-SMH82-SINCOS	STUNG-CPX3S025-RS-I-O
KUP-560-66-22H7/32H7	KGEH52/49100-MLF-ZR	MOT-MH105-SINCOS	STUNG-CPX3S075-RS-I-O
KUP-560-66-32H7/32H7	KGEH25/43200-MDKUE-ZR	MOT-MH145-45-08-SINCOS	STUNG-CPX3S075-RS-I-O
KUP-560-66-22H7/32H7	KGEH52/49100-MLF-ZR	MOT-SMH100-SINCOS	STUNG-CPX3S063-RS-I-O
KUP-560-66-32H7/32H7	KGEH25/43200-MDKUE-ZR	MOT-MH145-15-SINCOS	STUNG-CPX3S150-RS-I-O
KUP-560-66-22H7/32H7	KGEH52/49100-MLF-ZR	MOT-SMH82-SINCOS	STUNG-CPX3S025-RS-I-O
KUP-560-66.1-32H7/32H7	KGEH25/43200-MDKUE-ZR	MOT-MH145-45-08-SINCOS	STUNG-CPX3S075-RS-I-O
KUP-560-66-22H7/32H7	KGEH52/49100-MLF-ZR	MOT-SMHA100-BR-SINCOS	STUNG-CPX3S063-RS-I-O
KUP-560-66-22H7/32H7	KGEH52/49100-MLF-ZR	MOT-MHA105-BR-SINCOS	STUNG-CPX3S075-RS-I-O
KUP-560-66-22H7/32H7	KGEH52/49100-MLF-ZR	MOT-SMHA82-BR-SINCOS	STUNG-CPX3S025-RS-I-O
KUP-560-66-32H7/32H7	KGEH25/43200-MDKUE-ZR	MOT-MHA145-45-08-BR-SINCOS	STUNG-CPX3S075-RS-I-O
KUP-560-66(.1)-22H7/32H7	KGEH52/49100-MLF-ZR	MOT-SMHA100-BR-SINCOS	STUNG-CPX3S063-RS-I-O
KUP-560-66(.1)-32H7/32H7	KGEH25/43200-MDKUE-ZR	MOT-MHA145-45-08-BR-SINCOS	STUNG-CPX3S075-RS-I-O
KUP-560-66(.1)-32H7/32H7	KGEH52/49100-MLF-ZR	MOT-SMHA100-BR-SINCOS	STUNG-CPX3S063-RS-I-O

Proven drive combinations

Clamping actuators with track roller guidance system and toothed belt drive

Designation	Position	Characteristics				Combination
		m_{max} kg	v_{max} m/s	a_{max} m/s^2	v_m m/s	Planetary gearbox
MKLF32..-ZR	Horizontal	2	2,4	10	1,95	GETR-PLN70-4
		8	1,2	10	1,13	GETR-PLE60-70-8
		10	2,4	10	1,95	GETR-PLN70-90-4
	Vertical	2	2,4	10	1,95	GETR-PLN70-4
		7	2,4	10	1,95	GETR-PLN70-90-4
		8	1,2	10	1,13	GETR-PLN70-8
MKLF52..-ZR	Horizontal	8	3,4	10	2,3	GETR-PLN90-115-4
		13	0,8	10	0,8	GETR-PLN70-16
		15	1,7	10	1,5	GETR-PLN70-8
		16	4	10	2,45	GETR-PLN90-115-4
	Vertical	8	1,6	10	1,5	GETR-PLN70-90-8
		8	3,4	10	2,3	GETR-PLN90-115-4
		13	0,8	5	0,8	GETR-PLN70-16
		14	4	10	2,45	GETR-PLN90-115-4

1) Alternatively: KGEH.MKUE25-ZR-60/68/M5-3600.

Coupling	Coupling housing	Servo motor	Servo controller
KUP-560-56-16H7/20H7	KGEH32/36000-MLF-ZR	MOT-SMH60-C7-SINCOS	STUNG-CPX3S025-RS-I-O
KUP-560-56-16H7/20H7	KGEH32/43000-MLF-ZR	MOT-SMH60-C7-SINCOS	STUNG-CPX3S025-RS-I-O
KUP-560-56-16H7/20H7	KGEH32/36000-MLF-ZR	MOT-SMH82-SINCOS	STUNG-CPX3S025-RS-I-O
KUP-560-56-16H7/20H7	KGEH32/36000-MLF-ZR	MOT-SMHA60-C7-BR-SINCOS	STUNG-CPX3S025-RS-I-O
KUP-560-56-16H7/20H7	KGEH32/36000-MLF-ZR	MOT-SMHA82-BR-SINCOS	STUNG-CPX3S025-RS-I-O
KUP-560-56-16H7/20H7	KGEH32/36000-MLF-ZR	MOT-SMHA60-C7-BR-SINCOS	STUNG-CPX3S025-RS-I-O
KUP-560-56-20H7/22H7	KGEH52/49100-MLF-ZR	MOT-SMH100-SINCOS	STUNG-CPX3S063-RS-I-O
KUP-560-56-16H7/20H7	KGEH52/43300-MLF-ZR	MOT-SMH60-C7-SINCOS	STUNG-CPX3S025-RS-I-O
KUP-560-56-16H7/20H7	KGEH52/43300-MLF-ZR[1)]	MOT-SMH82-SINCOS	STUNG-CPX3S025-RS-I-O
KUP-560-66-20H7/22H7	KGEH52/49100-MLF-ZR	MOT-MH105-SINCOS	STUNG-CPX3S075-RS-I-O
KUP-560-56-16H7/20H7	KGEH52/43300-MLF-ZR	MOT-SMHA82-BR-SINCOS	STUNG-CPX3S025-RS-I-O
KUP-560-56-20H7/22H7	KGEH52/49100-MLF-ZR	MOT-SMHA100-BR-SINCOS	STUNG-CPX3S063-RS-I-O
KUP-560-56-16H7/20H7	KGEH52/43300-MLF-ZR	MOT-SMH60-C7-BR-SINCOS	STUNG-CPX3S025-RS-I-O
KUP-560-56-20H7/22H7	KGEH52/49100-MLF-ZR	MOT-MHA105-BR-SINCOS	STUNG-CPX3S075-RS-I-O

Proven drive combinations

Actuators with track roller guidance system and toothed belt drive with integrated gearbox

Designation	Position	Characteristics			
		m_{max} kg	v_{max} m/s	a_{max} m/s^2	v_m m/s
MLF52..-ZR-GTRI	Horizontal	20	3,4	10	2,3
		35	4	10	2,45
		35	1,7	10	1,5
	Vertical	20	3,4	10	2,3
		20	1,6	10	1,5
		30	4	10	2,45
MKLF52..-ZR-GTRI	Horizontal	8	3,4	10	2,3
		15	1,7	10	1,5
		16	4	10	2,45
	Vertical	8	3,4	10	2,3
		10	1,6	10	1,5
		14	4	10	2,45

Combination			
Planetary gearbox	Ratio i	Servo motor	Servo controller
GTRI/4	4	MOT-SMH100-SINCOS	STUNG-CPX3S063-RS-I-O
GTRI/4	4	MOT-MH105-SINCOS	STUNG-CPX3S075-RS-I-O
GTRI/8	8	MOT-SMH82-SINCOS	STUNG-CPX3S025-RS-I-O
GTRI/4	4	MOT-SMHA100-BR-SINCOS	STUNG-CPX3S063-RS-I-O
GTRI/8	8	MOT-SMHA82-BR-SINCOS	STUNG-CPX3S025-RS-I-O
GTRI/4	4	MOT-MHA105-BR-SINCOS	STUNG-CPX3S075-RS-I-O
GTRI/4	4	MOT-SMH100-SINCOS	STUNG-CPX3S063-RS-I-O
GTRI/8	8	MOT-SMH82-SINCOS	STUNG-CPX3S025-RS-I-O
GTRI/4	4	MOT-MH105-SINCOS	STUNG-CPX3S075-RS-I-O
GTRI/4	4	MOT-SMHA100-BR-SINCOS	STUNG-CPX3S063-RS-I-O
GTRI/8	8	MOT-SMHA82-BR-SINCOS	STUNG-CPX3S025-RS-I-O
GTRI/4	4	MOT-MHA105-BR-SINCOS	STUNG-CPX3S075-RS-I-O

Proven drive combinations

Actuators with monorail guidance system and toothed belt drive

Designation	Position	Characteristics				Combination
		m_{max} kg	v_{max} m/s	a_{max} m/s²	v_m m/s	Planetary gearbox
MKUVE20-C..-ZR	Horizontal	10	1,4	10	1,2	GETR-PLN70-8
		10	2,75	10	2,1	GETR-PLN70-90-4
		35	2,5	10	2,0	GETR-PLN90-115-4
		50	0,7	5	0,7	GETR-PLN70-16
		65	1,4	10	1,3	GETR-PLN70-90-8
		150	1,25	5	1,1	GETR-PLN90-115-8
	Vertical	10	1,4	10	1,2	GETR-PLN70-8
		10	2,75	10	2,1	GETR-PLN70-90-4
		30	1,4	10	1,3	GETR-PLN70-90-8
		30	0,7	5	0,7	GETR-PLN70-16
		35	2,5	10	2,0	GETR-PLN90-115-4
		60	3	10	2,2	GETR-PLN115-142-4
		75	0,7	5	0,7	GETR-PLN70-16-92
		75	1,25	5	1,1	GETR-PLN90-115-8
MKUSE25..-ZR **MKUVE25..-ZR**	Horizontal	5	3,2	10	2,25	GETR-PLN70-4-82
		20	3,2	10	2,25	GETR-PLN90-115-4
		30	0,8	10	0,8	GETR-PLN70-16
		35	4	10	2,45	GETR-PLN90-115-4
		35	1,6	10	1,45	GETR-PLN70-8
		65	4	10	2,45	GETR-PLN115-142-4
		85	1,6	10	1,45	GETR-PLN90-115-8
		150	1,6	10	1,45	GETR-PLN115-142-8
	Vertical	5	3,2	10	2,25	GETR-PLN70-4-82
		20	1,6	10	1,45	GETR-PLN70-90-8
		20	3,2	10	2,25	GETR-PLN90-115-4
		30	4	10	2,45	GETR-PLN90-115-4
		30	0,8	5	0,75	GETR-PLN70-16
		45	4	10	2,45	GETR-PLN115-142-4
		55	0,8	5	0,75	GETR-PLN90-16
		70	1,5	5	1,3	GETR-PLN90-115-8
		150	1,6	5	1,35	GETR-PLN115-142-8

1) Alternatively: KGEH.MKUE25-ZR-60/68/M5-3600.

Coupling	Coupling housing	Servo motor	Servo controller
KUP-560-56-16H7/20H7	KGEH50/43300-MLFI-B-ZR	MOT-SMH60-C7-SINCOS	STUNG-CPX3S025-RS-I-O
KUP-560-56-16H7/20H7	KGEH50/43300-MLFI-B-ZR	MOT-SMH82-SINCOS	STUNG-CPX3S025-RS-I-O
KUP-560-56-20H7/22H7	KGEH50/43100-MLFI-B-ZR	MOT-SMH100-SINCOS	STUNG-CPX3S063-RS-I-O
KUP-560-56-16H7/20H7	KGEH50/43300-MLFI-B-ZR	MOT-SMH60-C7-SINCOS	STUNG-CPX3S025-RS-I-O
KUP-560-56-16H7/20H7	KGEH50/43300-MLFI-B-ZR	MOT-SMH82-SINCOS	STUNG-CPX3S025-RS-I-O
KUP-560-56.1-20H7/22H7	KGEH50/43100-MLFI-B-ZR	MOT-SMH100-SINCOS	STUNG-CPX3S063-RS-I-O
KUP-560-56-16H7/20H7	KGEH50/43300-MLFI-B-ZR	MOT-SMH60-C7-BR-SINCOS	STUNG-CPX3S025-RS-I-O
KUP-560-56-16H7/20H7	KGEH50/43300-MLFI-B-ZR	MOT-SMHA82-BR-SINCOS	STUNG-CPX3S025-RS-I-O
KUP-560-56-16H7/20H7	KGEH50/43300-MLFI-B-ZR	MOT-SMHA82-BR-SINCOS	STUNG-CPX3S025-RS-I-O
KUP-560-56-16H7/20H7	KGEH50/43300-MLFI-B-ZR	MOT-SMH60-C7-BR-SINCOS	STUNG-CPX3S025-RS-I-O
KUP-560-56-20H7/22H7	KGEH50/43100-MLFI-B-ZR	MOT-SMHA100-BR-SINCOS	STUNG-CPX3S063-RS-I-O
KUP-560-66-20H7/32H7	KGEH50/43110-MLFI-B-ZR	MOT-MHA145-45-08-BR-SINCOS	STUNG-CPX3S075-RS-I-O
KUP-560-56.1-16H7/20H7	KGEH50/43300-MLFI-B-ZR	MOT-SMHA82-BR-SINCOS	STUNG-CPX3S025-RS-I-O
KUP-560-56.1-20H7/22H7	KGEH50/43100-MLFI-B-ZR	MOT-SMHA100-BR-SINCOS	STUNG-CPX3S063-RS-I-O
KUP-560-56-16H7/20H7	KGEH52/43300-MLF-ZR	MOT-SMH82-SINCOS	STUNG-CPX3S025-RS-I-O
KUP-560-56-20H7/22H7	KGEH52/49100-MLF-ZR	MOT-SMH100-SINCOS	STUNG-CPX3S063-RS-I-O
KUP-560-56-16H7/20H7	KGEH52/43300-MLF-ZR	MOT-SMH60-C7-SINCOS	STUNG-CPX3S025-RS-I-O
KUP-560-56.1-20H7/22H7	KGEH52/49100-MLF-ZR	MOT-MH105-SINCOS	STUNG-CPX3S075-RS-I-O
KUP-560-56-16H7/20H7	KGEH52/43300-MLF-ZR[1)]	MOT-SMH82-SINCOS	STUNG-CPX3S025-RS-I-O
KUP-560-66-20H7/32H7	KGEH52/43400-MLF-ZR	MOT-MH145-45-08-SINCOS	STUNG-CPX3S075-RS-I-O
KUP-560-66-20H7/22H7	KGEH52/49100-MLF-ZR	MOT-SMH100-SINCOS	STUNG-CPX3S063-RS-I-O
KUP-560-66.1-20H7/32H7	KGEH52/43400-MLF-ZR	MOT-MH145-45-08-SINCOS	STUNG-CPX3S075-RS-I-O
KUP-560-56-16H7/20H7	KGEH52/43300-MLF-ZR	MOT-SMHA82-BR-SINCOS	STUNG-CPX3S025-RS-I-O
KUP-560-56-16H7/20H7	KGEH52/43300-MLF-ZR	MOT-SMHA82-BR-SINCOS	STUNG-CPX3S025-RS-I-O
KUP-560-56-20H7/22H7	KGEH52/49100-MLF-ZR	MOT-SMHA100-BR-SINCOS	STUNG-CPX3S063-RS-I-O
KUP-560-56.1-20H7/22H7	KGEH52/49100-MLF-ZR	MOT-MHA100-BR-SINCOS	STUNG-CPX3S075-RS-I-O
KUP-560-56-16H7/20H7	KGEH52/43300-MLF-ZR	MOT-SMH60-C7-BR-SINCOS	STUNG-CPX3S025-RS-I-O
KUP-560-66-20H7/32H7	KGEH52/43400-MLF-ZR	MOT-MHA145-45-08-BR-SINCOS	STUNG-CPX3S075-RS-I-O
KUP-560-66-20H7/22H7	KGEH52/49100-MLF-ZR	MOT-SMHA82-BR-SINCOS	STUNG-CPX3S025-RS-I-O
KUP-560-66-20H7/22H7	KGEH52/49100-MLF-ZR	MOT-SMHA100-BR-SINCOS	STUNG-CPX3S063-RS-I-O
KUP-560-66.1-20H7/32H7	KGEH52/43400-MLF-ZR	MOT-MHA145-45-08-BR-SINCOS	STUNG-CPX3S075-RS-I-O

Proven drive combinations

Actuators with monorail guidance system and toothed belt drive with integrated gearbox

Designation	Position	Characteristics			
		m_{max} kg	v_{max} m/s	a_{max} m/s^2	v_m m/s
MKUSE25..-ZR-GTRI **MKUVE25..-ZR-GTRI**	Horizontal	20	3,2	10	2,25
		35	4	10	2,45
		35	1,6	10	1,45
	Vertical	20	1,6	10	1,45
		20	3,2	10	2,25
		30	4	10	2,45

Combination			
Planetary gearbox	Ratio i	Servo motor	Servo controller
GTRI/4	4	MOT-SMH100-SINCOS	STUNG-CPX3S063-RS-I-O
GTRI/4	4	MOT-MH105-SINCOS	STUNG-CPX3S075-RS-I-O
GTRI/8	8	MOT-SMH82-SINCOS	STUNG-CPX3S025-RS-I-O
GTRI/8	8	MOT-SMHA82-BR-SINCOS	STUNG-CPX3S025-RS-I-O
GTRI/4	4	MOT-SMHA100-BR-SINCOS	STUNG-CPX3S063-RS-I-O
GTRI/4	4	MOT-MHA105-BR-SINCOS	STUNG-CPX3S075-RS-I-O

Proven drive combinations

Tandem actuators with monorail guidance system and toothed belt drive

Designation	Position	Characteristics				Combination
		m_{max} kg	v_{max} m/s	a_{max} m/s²	v_m m/s	Planetary gearbox
MDKUVE15..-3ZR	Horizontal	60	2	10	1,7	GETR-PLN90-115-4
		75	1	5	0,95	GETR-PLN70-90-8
		90	0,5	5	0,95	GETR-PLN70-16
		250	1	5	0,95	GETR-PLN90-115-8
	Vertical	20	1	5	0,95	GETR-PLN70-90-8
		30	2	5	1,75	GETR-PLN90-115-4
		55	2,5	10	2	GETR-PLN90-115-4
		70	1	5	0,95	GETR-PLN90-115-8
		75	0,5	5	0,5	GETR-PLN90-16
		150	1,25	5	1,12	GETR-PLN115-8
		200	0,5	2,5	0,46	GETR-PLN90-115-16
MDKUSE25..-3ZR	Horizontal	15	2,8	10	2,1	GETR-PLN90-115-4
		40	1,5	5	1,25	GETR-PLN90-16
		40	4	10	2,5	GETR-PLN90-115-4
		65	4	10	2,5	GETR-PLN115-142-4
		100	1,4	10	1,2	GETR-PLN90-115-8
		125	4	10	2,5	GETR-PLN115-142-4
		175	0,75	5	0,7	GETR-PLN90-16
		200	4	10	2,5	GETR-PLN115-142-8
		300	1	5	0,95	GETR-PLN115-142-16
	Vertical	10	2,8	5	1,7	GETR-PLN90-115-4
		25	4	10	2,5	GETR-PLN90-115-4
		40	0,75	5	0,7	GETR-PLN90-16
		40	4	10	2,5	GETR-PLN115-142-4
		50	1,4	5	1,2	GETR-PLN90-115-8
		65	4	10	2,5	GETR-PLN115-142-4
		120	2	5	1,2	GETR-PLN115-142-8
		150	0,7	2,5	0,65	GETR-PLN90-115-16
		250	1	2,5	0,9	GETR-PLN115-142-16
MDKUVE35..-3ZR	Horizontal	250	2	10	1,75	GETR-PLN142-8
		350	2	5	1,5	GETR-PLN142-205-8
		400	2	5	1,5	GETR-PLN142-205-8
		500	1	5	0,9	GETR-PLN142-16
		800	1	5	0,9	GETR-PLN142-205-16
		1 200	1	2,5	0,85	GETR-PLN190-16
		1 500	0,5	2,5	0,45	GETR-PLN142-205-32
		1 500	0,5	2,5	0,5	GETR-PLN142-32
	Vertical	100	2	10	1,75	GETR-PLN142-8
		250	2	5	1,5	GETR-PLN142-205-8
		300	2	5	1,5	GETR-PLN142-205-8
		400	1	5	0,9	GETR-PLN142-16
		600	1	5	0,9	GETR-PLN142-205-16
		900	1	2,5	0,85	GETR-PLN190-16
		1 000	0,5	2,5	0,5	GETR-PLN142-32
		1 200	0,5	2,5	0,45	GETR-PLN142-205-32

Coupling	Coupling housing	Servo motor	Servo controller
KUP-560-56-22H7/25H7	KGEH32/43300-MLF-ZR	MOT-SMH100-SINCOS	STUNG-CPX3S063-RS-I-O
KUP-560-56-16H7/25H7	KGEH32/36000-MLF-ZR	MOT-SMH82-SINCOS	STUNG-CPX3S025-RS-I-O
KUP-560-56-16H7/25H7	KGEH32/36000-MLF-ZR	MOT-SMH60-C7-SINCOS	STUNG-CPX3S025-RS-I-O
KUP-560-56.1-22H7/25H7	KGEH32/43300-MLF-ZR	MOT-SMH100-SINCOS	STUNG-CPX3S063-RS-I-O
KUP-560-56-16H7/25H7	KGEH32/36000-MLF-ZR	MOT-SMHA82-BR-SINCOS	STUNG-CPX3S025-RS-I-O
KUP-560-56-22H7/25H7	KGEH32/43300-MLF-ZR	MOT-SMHA100-BR-SINCOS	STUNG-CPX3S063-RS-I-O
KUP-560-56.1-22H7/25H7	KGEH32/43300-MLF-ZR	MOT-MHA105-08-BR-SINCOS	STUNG-CPX3S075-RS-I-O
KUP-560-56.1-22H7/25H7	KGEH32/43300-MLF-ZR	MOT-SMHA100-BR-SINCOS	STUNG-CPX3S063-RS-I-O
KUP-560-56.1-22H7/25H7	KGEH32/43300-MLF-ZR	MOT-SMHA100-BR-SINCOS	STUNG-CPX3S025-RS-I-O
KUP-560-66.1-25H7/32H7	KGEH15/43200-MDKUVE-ZR	MOT-MHA105-08-BR-SINCOS	STUNG-CPX3S075-RS-I-O
KUP-560-56.2-22H7/25H7	KGEH32/43100-MLF-ZR	MOT-SMHA100-BR-SINCOS	STUNG-CPX3S063-RS-I-O
KUP-560-66-22H7/32H7	KGEH52/49100-MLF-ZR	MOT-SMH100-SINCOS	STUNG-CPX3S063-RS-I-O
KUP-560-66-22H7/32H7	KGEH52/49100-MLF-ZR	MOT-SMH82-SINCOS	STUNG-CPX3S025-RS-I-O
KUP-560-66-22H7/32H7	KGEH52/49100-MLF-ZR	MOT-MH105-08-SINCOS	STUNG-CPX3S075-RS-I-O
KUP-560-66-32H7/32H7	KGEH25/43200-MDKUE-ZR	MOT-MH145-45-08-SINCOS	STUNG-CPX3S075-RS-I-O
KUP-560-66-22H7/32H7	KGEH52/49100-MLF-ZR	MOT-SMH100-SINCOS	STUNG-CPX3S063-RS-I-O
KUP-560-66-32H7/32H7	KGEH25/43200-MDKUE-ZR	MOT-MH145-15-SINCOS	STUNG-CPX3S150-RS-I-O
KUP-560-66-22H7/32H7	KGEH52/49100-MLF-ZR	MOT-SMH82-SINCOS	STUNG-CPX3S025-RS-I-O
KUP-560-66.1-32H7/32H7	KGEH25/43200-MDKUE-ZR	MOT-MH145-45-08-SINCOS	STUNG-CPX3S075-RS-I-O
KUP-560-66.1-32H7/32H7	KGEH25/43200-MDKUE-ZR	MOT-MH145-45-08-SINCOS	STUNG-CPX3S075-RS-I-O
KUP-560-66-22H7/32H7	KGEH52/49100-MLF-ZR	MOT-SMHA100-BR-SINCOS	STUNG-CPX3S063-RS-I-O
KUP-560-66-22H7/32H7	KGEH52/49100-MLF-ZR	MOT-MHA105-08-BR-SINCOS	STUNG-CPX3S075-RS-I-O
KUP-560-66-22H7/32H7	KGEH52/49100-MLF-ZR	MOT-SMHA82-BR-SINCOS	STUNG-CPX3S025-RS-I-O
KUP-560-66-32H7/32H7	KGEH25/43200-MDKUE-ZR	MOT-MHA145-45-08-BR-SINCOS	STUNG-CPX3S075-RS-I-O
KUP-560-66(.1)-22H7/32H7	KGEH52/49100-MLF-ZR	MOT-SMHA100-BR-SINCOS	STUNG-CPX3S063-RS-I-O
KUP-560-66-32H7/32H7	KGEH25/43200-MDKUE-ZR	MOT-MHA145-45-15-BR-SINCOS	STUNG-CPX3S150-RS-I-O
KUP-560-66(.1)-32H7/32H7	KGEH25/43200-MDKUE-ZR	MOT-MHA145-45-08-BR-SINCOS	STUNG-CPX3S075-RS-I-O
KUP-560-66(.1)-32H7/32H7	KGEH52/49100-MLF-ZR	MOT-SMHA100-BR-SINCOS	STUNG-CPX3S063-RS-I-O
KUP-560-66.2-32H7/32H7	KGEH25/43200-MDKUE-ZR	MOT-MHA145-45-08-BR-SINCOS	STUNG-CPX3S075-RS-I-O
KUP-KM600-40H7/50H7	KGEH35/43100-MDKUSE-ZR	MOT-MH145-30-28-SINCOS	STUNG-CPX3S150-RS-I-O
KUP-KM600-40H7/50H7	KGEH35/43100-MDKUSE-ZR	MOT-MH205-30-28-SINCOS	STUNG-CPX3S300-RS-I-O
KUP-KM600-40H7/50H7	KGEH35/43100-MDKUSE-ZR	MOT-MH205-30-50-SINCOS	STUNG-CPX3S300-RS-I-O
KUP-KM600-40H7/50H7	KGEH35/43100-MDKUSE-ZR	MOT-MH145-30-28-SINCOS	STUNG-CPX3S150-RS-I-O
KUP-KM600-40H7/50H7	KGEH35/43100-MDKUSE-ZR	MOT-MH205-30-28-SINCOS	STUNG-CPX3S300-RS-I-O
KUP-M900-50H7/55H7	KGEH35/43000-MDKUSE-ZR	MOT-MH205-30-50-SINCOS	STUNG-CPX3S300-RS-I-O
KUP-KM600-40H7/50H7	KGEH35/43100-MDKUSE-ZR	MOT-MH205-30-28-SINCOS	STUNG-CPX3S300-RS-I-O
KUP-KM600-40H7/50H7	KGEH35/43100-MDKUSE-ZR	MOT-MH145-30-28-SINCOS	STUNG-CPX3S150-RS-I-O
KUP-KM600-40H7/50H7	KGEH35/43100-MDKUSE-ZR	MOT-MHA145-30-28-BR-SINCOS	STUNG-CPX3S150-RS-I-O
KUP-KM600-40H7/50H7	KGEH35/43100-MDKUSE-ZR	MOT-MHA205-30-28-BR-SINCOS	STUNG-CPX3S300-RS-I-O
KUP-KM600-40H7/50H7	KGEH35/43100-MDKUSE-ZR	MOT-MHA205-30-50-BR-SINCOS	STUNG-CPX3S300-RS-I-O
KUP-KM600-40H7/50H7	KGEH35/43100-MDKUSE-ZR	MOT-MHA145-15-08-BR-SINCOS	STUNG-CPX3S150-RS-I-O
KUP-KM600-40H7/50H7	KGEH35/43100-MDKUSE-ZR	MOT-MHA205-30-28-BR-SINCOS	STUNG-CPX3S300-RS-I-O
KUP-M900-50H7/55H7	KGEH35/43000-MDKUSE-ZR	MOT-MHA205-30-50-BR-SINCOS	STUNG-CPX3S300-RS-I-O
KUP-KM600-40H7/50H7	KGEH35/43100-MDKUSE-ZR	MOT-MHA145-30-28-BR-SINCOS	STUNG-CPX3S150-RS-I-O
KUP-KM600-40H7/50H7	KGEH35/43100-MDKUSE-ZR	MOT-MHA205-30-28-BR-SINCOS	STUNG-CPX3S300-RS-I-O

Tandem actuators with monorail guidance system and ball screw drive

Designation	Position	Characteristics			
		m_{max} kg	v_{max} m/s	a_{max} m/s²	v_m m/s
MDKUVE15..-KGT/5-F	Horizontal	150 [1]	0,25	5	0,25
		600	0,25	2,5	0,25
	Vertical	100	0,25	5	0,25
		400	0,25	5	0,25
		600	0,25	5	0,25
MDKUVE15..-KGT/5-FM	Horizontal	100 [1]	0,25	5	0,25
		600	0,25	2,5	0,25
	Vertical	100	0,25	5	0,25
		400	0,25	5	0,25
		600	0,25	5	0,25
MDKUVE15..-KGT/10-F	Horizontal	12,5 [1]	0,5	5	0,49
		200	0,5	5	0,49
		1 000	0,5	5	0,49
	Vertical	40	0,5	5	0,49
		60	0,25	2,5	0,25
		200	0,5	5	0,49
		325	0,5	0,5	0,49
MDKUVE15..-KGT/10-FM	Horizontal	150	0,5	5	0,49
		175	0,5	2,5	0,48
		500	0,5	5	0,49
	Vertical	30	0,5	5	0,49
		50	0,25	2,5	0,25
		175	0,5	5	0,49
		200	0,25	2,5	0,25
		300	0,5	0,5	0,49
		325	0,25	2,5	0,25
MDKUVE15..-KGT/20-F	Horizontal	100	1	5	0,91
		300	1	5	0,91
	Vertical	25	0,5	5	0,48
		85	1	5	0,91
		150	1	5	0,91
MDKUVE15..-KGT/50-F	Horizontal	50	2,5	10	1,9
		90	2,5	10	1,9
		155	2,5	5	1,54
	Vertical	25	2,5	5	1,54
		50	2,5	5	1,54
		70	2,5	5	1,54

[1] Stroke length = 1 000 mm.

Combination			
Coupling	Coupling housing	Servo motor	Servo controller
KUP-50-40-2-11H7/13H7	KGEH20/36200-MKUVE-KGT	MOT-SMH60-C7-SINCOS	STUNG-CPX3S025-RS-I-O
KUP-50-40-2-13H7/14H7	KGEH20/36000-MKUVE-KGT	MOT-SMH82-SINCOS	STUNG-CPX3S025-RS-I-O
KUP-50-40-2-13H7/14H7	KGEH20/36000-MKUVE-KGT	MOT-SMHA82-BR-SINCOS	STUNG-CPX3S025-RS-I-O
KUP-50-40-2-13H7/19H7	KGEH20/36100-MKUVE-KGT	MOT-SMHA100-BR-SINCOS	STUNG-CPX3S063-RS-I-O
KUP-50-40-2-13H7/19H7	KGEH20/36100-MKUVE-KGT	MOT-MHA105-BR-SINCOS	STUNG-CPX3S075-RS-I-O
KUP-50-40-2-11H7/13H7	KGEH20/36200-MKUVE-KGT	MOT-SMH60-C7-SINCOS	STUNG-CPX3S025-RS-I-O
KUP-50-40-2-13H7/14H7	KGEH20/36000-MKUVE-KGT	MOT-SMH82-SINCOS	STUNG-CPX3S025-RS-I-O
KUP-50-40-2-13H7/14H7	KGEH20/36000-MKUVE-KGT	MOT-SMHA02-BR-SINCOS	STUNG-CPX3S025-RS-I-O
KUP-50-40-2-13H7/19H7	KGEH20/36100-MKUVE-KGT	MOT-SMHA100-BR-SINCOS	STUNG-CPX3S063-RS-I-O
KUP-50-40-2-13H7/19H7	KGEH20/36100-MKUVE-KGT	MOT-MHA105-BR-SINCOS	STUNG-CPX3S075-RS-I-O
KUP-50-40-2-11H7/13H7	KGEH20/36200-MKUVE-KGT	MOT-SMH60-C7-SINCOS	STUNG-CPX3S025-RS-I-O
KUP-50-40-2-13H7/14H7	KGEH20/36000-MKUVE-KGT	MOT-SMH82-SINCOS	STUNG-CPX3S025-RS-I-O
KUP-50-40-2-13H7/19H7	KGEH20/36100-MKUVE-KGT	MOT-SMH100-SINCOS	STUNG-CPX3S063-RS-I-O
KUP-50-40-2-13H7/14H7	KGEH20/36000-MKUVE-KGT	MOT-SMHA82-BR-SINCOS	STUNG-CPX3S025-RS-I-O
KUP-50-40-2-13H7/14H7	KGEH20/36000-MKUVE-KGT	MOT-SMHA82-BR-SINCOS	STUNG-CPX3S025-RS-I-O
KUP-50-40-2-13H7/19H7	KGEH20/36100-MKUVE-KGT	MOT-SMHA100-BR-SINCOS	STUNG-CPX3S063-RS-I-O
KUP-50-40-2-13H7/19H7	KGEH20/36100-MKUVE-KGT	MOT-MHA105-BR-SINCOS	STUNG-CPX3S075-RS-I-O
KUP-50-40-2-13H7/14H7	KGEH20/36000-MKUVE-KGT	MOT-SMH82-SINCOS	STUNG-CPX3S025-RS-I-O
KUP-50-40-2-13H7/14H7	KGEH20/36000-MKUVE-KGT	MOT-SMH82-SINCOS	STUNG-CPX3S025-RS-I-O
KUP-50-40-2-13H7/19H7	KGEH20/36100-MKUVE-KGT	MOT-SMH100-SINCOS	STUNG-CPX3S063-RS-I-O
KUP-50-40-2-13H7/14H7	KGEH20/36000-MKUVE-KGT	MOT-SMHA82-BR-SINCOS	STUNG-CPX3S025-RS-I-O
KUP-50-40-2-13H7/14H7	KGEH20/36000-MKUVE-KGT	MOT-SMHA82-BR-SINCOS	STUNG-CPX3S025-RS-I-O
KUP-50-40-2-13H7/19H7	KGEH20/36100-MKUVE-KGT	MOT-SMHA100-BR-SINCOS	STUNG-CPX3S063-RS-I-O
KUP-50-40-2-13H7/19H7	KGEH20/36100-MKUVE-KGT	MOT-SMHA100-BR-SINCOS	STUNG-CPX3S063-RS-I-O
KUP-50-40-2-13H7/19H7	KGEH20/36100-MKUVE-KGT	MOT-MHA105-BR-SINCOS	STUNG-CPX3S075-RS-I-O
KUP-50-40-2-13H7/19H7	KGEH20/36100-MKUVE-KGT	MOT-MHA105-BR-SINCOS	STUNG-CPX3S075-RS-I-O
KUP-50-40-2-13H7/14H7	KGEH20/36000-MKUVE-KGT	MOT-SMH82-SINCOS	STUNG-CPX3S025-RS-I-O
KUP-50-40-2-13H7/19H7	KGEH20/36100-MKUVE-KGT	MOT-SMH100-SINCOS	STUNG-CPX3S063-RS-I-O
KUP-50-40-2-13H7/14H7	KGEH20/36000-MKUVE-KGT	MOT-SMHA82-BR-SINCOS	STUNG-CPX3S025-RS-I-O
KUP-50-40-2-13H7/19H7	KGEH20/36100-MKUVE-KGT	MOT-SMHA100-BR-SINCOS	STUNG-CPX3S063-RS-I-O
KUP-50-40-2-13H7/19H7	KGEH20/36100-MKUVE-KGT	MOT-MHA105-BR-SINCOS	STUNG-CPX3S075-RS-I-O
KUP-50-40-2-13H7/19H7	KGEH20/36100-MKUVE-KGT	MOT-SMH100-SINCOS	STUNG-CPX3S063-RS-I-O
KUP-50-40-2-13H7/19H7	KGEH20/36100-MKUVE-KGT	MOT-MH105-SINCOS	STUNG-CPX3S075-RS-I-O
KUP-560-56-13H7/24H7	KGEH20/36300-MKUVE-KGT	MOT-MH145-SINCOS	STUNG-CPX3S075-RS-I-O
KUP-50-40-2-13H7/19H7	KGEH20/36100-MKUVE-KGT	MOT-SMHA100-BR-SINCOS	STUNG-CPX3S063-RS-I-O
KUP-50-40-2-13H7/19H7	KGEH20/36100-MKUVE-KGT	MOT-MHA105-BR-SINCOS	STUNG-CPX3S075-RS-I-O
KUP-560-56-13H7/24H7	KGEH20/36300-MKUVE-KGT	MOT-MHA145-BR-SINCOS	STUNG-CPX3S075-RS-I-O

Tandem actuators with monorail guidance system and ball screw drive (continued)

Designation	Position	Characteristics			
		m_{max} kg	v_{max} m/s	a_{max} m/s²	v_m m/s
MDKUVE25..-KGT/5-F MDKUSE25..-KGT/5-F	Horizontal	200 [1]	0,125	1,25	0,12
		700	0,21	2,5	0,21
		1 500	0,21	2,5	0,21
	Vertical	150 [1]	0,21	5	0,21
		550	0,21	2,5	0,21
		700 [1]	0,21	2,5	0,21
		825	0,21	1,25	0,21
MDKUVE25..-KGT/5-FM MDKUSE25..-KGT/5-FM	Horizontal	200 [1]	0,125	1	0,12
		700	0,21	2,5	0,21
		1 500	0,21	2,5	0,21
	Vertical	150 [1]	0,21	5	0,21
		550	0,21	2,5	0,21
		700 [1]	0,21	2,5	0,21
		825	0,21	1,25	0,21
MDKUVE25..-KGT/10-F MDKUSE25..-KGT/10-F	Horizontal	100 [1]	0,43	2,5	0,4
		300	0,43	5	0,42
		500 [1]	0,43	5	0,41
		800	0,43	5	0,42
		1 200 [1]	0,43	5	0,41
	Vertical	75	0,43	5	0,42
		175	0,43	2,5	0,41
		275	0,43	5	0,42
		400	0,43	5	0,42
		700	0,43	5	0,42
MDKUVE25..-KGT/10-FM MDKUSE25..-KGT/10-FM	Horizontal	200	0,43	5	0,42
		400	0,43	5	0,42
		750 [1]	0,43	5	0,41
	Vertical	100	0,43	5	0,42
		150 [1]	0,43	2,5	0,4
		225	0,43	5	0,42
		275	0,43	2,5	0,41
		350	0,43	2,5	0,41
		650	0,43	5	0,42
MDKUVE25..-KGT/20-F MDKUSE25..-KGT/20-F	Horizontal	25 [1]	0,5	5	0,48
		150	0,86	5	0,8
		225 [1]	0,86	5	0,75
		450	0,86	5	0,8
		525	0,86	5	0,8
	Vertical	75	0,86	2,5	0,75
		125	0,86	5	0,8
		170	0,86	2,5	0,75
		350	0,86	2,5	0,75

[1] Stroke length = 1 000 mm.

Combination			
Coupling	Coupling housing	Servo motor	Servo controller
KUP-50-40-2-14H7/19H7	KGEH25/36000-MKUE-KGT	MOT-SMH82-SINCOS	STUNG-CPX3S025-RS-I-O
KUP-50-40-2-19H7/19H7	KGEH25/36300-MKUE-KGT	MOT-SMH100-SINCOS	STUNG-CPX3S063-RS-I-O
KUP-50-40-2-19H7/19H7	KGEH25/36300-MKUE-KGT	MOT-SMH100-SINCOS	STUNG-CPX3S075-RS-I-O
KUP-50-40-2-19H7/19H7	KGEH25/36300-MKUE-KGT	MOT-SMHA100-BR-SINCOS	STUNG-CPX3S063-RS-I-O
KUP-50-40-2-19H7/19H7	KGEH25/36300-MKUE-KGT	MOT-MHA105-BR-SINCOS	STUNG-CPX3S075-RS-I-O
KUP-50-40-2-19H7/19H7	KGEH25/36300-MKUE-KGT	MOT-MHA105-BR-SINCOS	STUNG-CPX3S075-RS-I-O
KUP-560-56-19H7/24H7	KGEH25/36100-MKUE-KGT	MOT-MHA145-08-BR-SINCOS	STUNG-CPX3S150-RS-I-O
KUP-50-40-2-14H7/19H7	KGEH25/36000-MKUE-KGT	MOT-SMH82-SINCOS	STUNG-CPX3S025-RS-I-O
KUP-50-40-2-19H7/19H7	KGEH25/36300-MKUE-KGT	MOT-SMH100-SINCOS	STUNG-CPX3S063-RS-I-O
KUP-50-40-2-19H7/19H7	KGEH25/36300-MKUE-KGT	MOT-SMH100-SINCOS	STUNG-CPX3S075-RS-I-O
KUP-50-40-2-19H7/19H7	KGEH25/36300-MKUE-KGT	MOT-SMHA100-BR-SINCOS	STUNG-CPX3S063-RS-I-O
KUP-50-40-2-19H7/19H7	KGEH25/36300-MKUE-KGT	MOT-MHA105-BR-SINCOS	STUNG-CPX3S075-RS-I-O
KUP-50-40-2-19H7/19H7	KGEH25/36300-MKUE-KGT	MOT-MHA105-BR-SINCOS	STUNG-CPX3S075-RS-I-O
KUP-560-56-19H7/24H7	KGEH25/36100-MKUE-KGT	MOT-MHA145-08-BR-SINCOS	STUNG-CPX3S150-RS-I-O
KUP-50-40-2-14H7/19H7	KGEH25/36000-MKUE-KGT	MOT-SMH82-SINCOS	STUNG-CPX3S025-RS-I-O
KUP-50-40-2-19H7/19H7	KGEH25/36300-MKUE-KGT	MOT-SMH100-SINCOS	STUNG-CPX3S063-RS-I-O
KUP-50-40-2-19H7/19H7	KGEH25/36300-MKUE-KGT	MOT-SMH100-SINCOS	STUNG-CPX3S063-RS-I-O
KUP-50-40-2-19H7/19H7	KGEH25/36300-MKUE-KGT	MOT-MH105-SINCOS	STUNG-CPX3S075-RS-I-O
KUP-50-40-2-19H7/19H7	KGEH25/36300-MKUE-KGT	MOT-MH105-SINCOS	STUNG-CPX3S075-RS-I-O
KUP-50-40-2-19H7/19H7	KGEH25/36000-MKUE-KGT	MOT-SMHA100-BR-SINCOS	STUNG-CPX3S063-RS-I-O
KUP-50-40-2-19H7/19H7	KGEH25/36000-MKUE-KGT	MOT-SMHA100-BR-SINCOS	STUNG-CPX3S063-RS-I-O
KUP-50-40-2-19H7/19H7	KGEH25/36300-MKUE-KGT	MOT-MHA105-BR-SINCOS	STUNG-CPX3S075-RS-I-O
KUP-560-56-19H7/24H7	KGEH25/36100-MKUE-KGT	MOT-MHA145-08-BR-SINCOS	STUNG-CPX3S150-RS-I-O
KUP-560-56-19H7/24H7	KGEH25/36100-MKUE-KGT	MOT-MHA145-15-BR-SINCOS	STUNG-CPX3S150-RS-I-O
KUP-50-40-2-19H7/19H7	KGEH25/36300-MKUE-KGT	MOT-SMH100-SINCOS	STUNG-CPX3S063-RS-I-O
KUP-50-40-2-19H7/19H7	KGEH25/36300-MKUE-KGT	MOT-MH105-SINCOS	STUNG-CPX3S075-RS-I-O
KUP-50-40-2-19H7/19H7	KGEH25/36300-MKUE-KGT	MOT-MH105-SINCOS	STUNG-CPX3S075-RS-I-O
KUP-50-40-2-19H7/19H7	KGEH25/36300-MKUE-KGT	MOT-SMHA100-BR-SINCOS	STUNG-CPX3S063-RS-I-O
KUP-50-40-2-19H7/19H7	KGEH25/36300-MKUE-KGT	MOT-SMHA100-BR-SINCOS	STUNG-CPX3S063-RS-I-O
KUP-50-40-2-19H7/19H7	KGEH25/36300-MKUE-KGT	MOT-MHA105-BR-SINCOS	STUNG-CPX3S075-RS-I-O
KUP-50-40-2-19H7/19H7	KGEH25/36300-MKUE-KGT	MOT-MHA105-BR-SINCOS	STUNG-CPX3S075-RS-I-O
KUP-560-56-19H7/24H7	KGEH25/36100-MKUE-KGT	MOT-MHA145-08-BR-SINCOS	STUNG-CPX3S075-RS-I-O
KUP-560-56-19H7/24H7	KGEH25/36100-MKUE-KGT	MOT-MHA145-15-BR-SINCOS	STUNG-CPX3S150-RS-I-O
KUP-50-40-2-14H7/19H7	KGEH25/36000-MKUE-KGT	MOT-SMH82-SINCOS	STUNG-CPX3S025-RS-I-O
KUP-50-40-2-19H7/19H7	KGEH25/36300-MKUE-KGT	MOT-SMH100-SINCOS	STUNG-CPX3S063-RS-I-O
KUP-50-40-2-19H7/19H7	KGEH25/36300-MKUE-KGT	MOT-SMH100-SINCOS	STUNG-CPX3S063-RS-I-O
KUP-50-40-2-19H7/19H7	KGEH25/36300-MKUE-KGT	MOT-MH105-SINCOS	STUNG-CPX3S075-RS-I-O
KUP-560-56-19H7/24H7	KGEH25/36100-MKUE-KGT	MOT-MH145-08-SINCOS	STUNG-CPX3S075-RS-I-O
KUP-50-40-2-19H7/19H7	KGEH25/36300-MKUE-KGT	MOT-SMHA100-BR-SINCOS	STUNG-CPX3S063-RS-I-O
KUP-50-40-2-19H7/19H7	KGEH25/36300-MKUE-KGT	MOT-MHA105-BR-SINCOS	STUNG-CPX3S075-RS-I-O
KUP-560-56-19H7/24H7	KGEH25/36100-MKUE-KGT	MOT-MHA145-08-BR-SINCOS	STUNG-CPX3S075-RS-I-O
KUP-560-56-19H7/24H7	KGEH25/36100-MKUE-KGT	MOT-MHA145-15-BR-SINCOS	STUNG-CPX3S150-RS-I-O

Tandem actuators with monorail guidance system and ball screw drive (continued)

Designation	Position	Characteristics			
		m_{max} kg	v_{max} m/s	a_{max} m/s²	v_m m/s
MDKUVE25..-KGT/20-FM **MDKUSE25..-KGT/20-FM**	Horizontal	150	0,86	5	0,8
		450	0,86	5	0,8
		500	0,86	5	0,8
	Vertical	35	0,86	5	0,8
		100	0,86	5	0,8
		135	0,86	5	0,8
		300	0,86	5	0,8
MDKUVE25..-KGT/40-F **MDKUSE25..-KGT/40-F**	Horizontal	30	1,73	5	1,35
		100	1,73	5	1,35
		125[1)]	1,73	5	1,08
		200	1,73	5	1,35
		350	1,73	5	1,35
	Vertical	25	1,73	5	1,35
		50	1,73	5	1,35
		75	1,73	5	1,35
		150	1,73	5	1,35

1) Stroke length = 1000 mm.

Combination			
Coupling	Coupling housing	Servo motor	Servo controller
KUP-50-40-2-19H7/19H7	KGEH25/36300-MKUE-KGT	MOT-SMH100-SINCOS	STUNG-CPX3S063-RS-I-O
KUP-50-40-2-19H7/19H7	KGEH25/36300-MKUE-KGT	MOT-MH105-SINCOS	STUNG-CPX3S075-RS-I-O
KUP-560-56-19H7/24H7	KGEH25/36100-MKUE-KGT	MOT-MH145-08-SINCOS	STUNG-CPX3S075-RS-I-O
KUP-50-40-2-19H7/19H7	KGEH25/36300-MKUE-KGT	MOT-SMHA100-BR-SINCOS	STUNG-CPX3S063-RS-I-O
KUP-50-40-2-19H7/19H7	KGEH25/36300-MKUE-KGT	MOT-MHA105-BR-SINCOS	STUNG-CPX3S075-RS-I-O
KUP-560-56-19H7/24H7	KGEH25/36100-MKUE-KGT	MOT-MHA145-08-BR-SINCOS	STUNG-CPX3S075-RS-I-O
KUP-560-56-19H7/24H7	KGEH25/36100-MKUE-KGT	MOT-MHA145-15-BR-SINCOS	STUNG-CPX3S150-RS-I-O
KUP-50-40-2-19H7/19H7	KGEH25/36300-MKUE-KGT	MOT-SMH100-SINCOS	STUNG-CPX3S063-RS-I-O
KUP-50-40-2-19H7/19H7	KGEH25/36300-MKUE-KGT	MOT-MH105-SINCOS	STUNG-CPX3S075-RS-I-O
KUP-50-40-2-19H7/19H7	KGEH25/36300-MKUE-KGT	MOT-MH105-SINCOS	STUNG-CPX3S075-RS-I-O
KUP-560-56-19H7/24H7	KGEH25/36100-MKUE-KGT	MOT-MH145-08-SINCOS	STUNG-CPX3S075-RS-I-O
KUP-560-56-19H7/24H7	KGEH25/36100-MKUE-KGT	MOT-MH145-15-SINCOS	STUNG-CPX3S150-RS-I-O
KUP-50-40-2-19H7/19H7	KGEH25/36300-MKUE-KGT	MOT-SMHA100-BR-SINCOS	STUNG-CPX3S063-RS-I-O
KUP-50-40-2-19H7/19H7	KGEH25/36300-MKUE-KGT	MOT-MHA105-BR-SINCOS	STUNG-CPX3S075-RS-I-O
KUP-560-56-19H7/24H7	KGEH25/36100-MKUE-KGT	MOT-MHA145-08-BR-SINCOS	STUNG-CPX3S075-RS-I-O
KUP-560-56-19H7/24H7	KGEH25/36100-MKUE-KGT	MOT-MHA145-15-BR-SINCOS	STUNG-CPX3S150-RS-I-O

Proven drive combinations

Actuators with monorail guidance system and ball screw drive

Designation	Position	Characteristics			
		m_{max} kg	v_{max} m/s	a_{max} m/s^2	v_m m/s
MKUVE15..-KGT/5-F **MKUVE15..-KGT/5-FM**	Horizontal	200	0,25	5	0,25
	Vertical	70	0,25	5	0,25
		175	0,25	5	0,25
MKUVE15..-KGT/10-F	Horizontal	25	0,5	5	0,49
		75	0,5	5	0,49
	Vertical	55	0,5	5	0,49
		200	0,5	5	0,49
MKUVE15..-KGT/10-FM	Horizontal	70	0,5	5	0,49
		250	0,5	5	0,49
	Vertical	55	0,5	5	0,49
		200	0,5	5	0,49
MKUVE15..-KGT/50-F	Horizontal	20	2,5	5	1,55
		50	2,5	5	1,55
		100	2,5	5	1,55
	Vertical	5	2,5	5	1,55
		35	2,5	5	1,55
		55	2,5	5	1,55
MKUVE20..-KGT/5-F **MKUVE20..-KGT/5-FM**	Horizontal	150 [1]	0,25	5	0,25
		500	0,25	2,5	0,25
	Vertical	30 [1]	0,25	5	0,25
		100 [1]	0,25	5	0,25
		125	0,25	2,5	0,25
MKUVE20..-KGT/10-F	Horizontal	12,5 [1]	0,5	5	0,49
		200	0,5	5	0,49
	Vertical	15 [1]	0,5	5	0,49
		60 [1]	0,5	5	0,49
		200	0,5	5	0,49
MKUVE20..-KGT/10-FM	Horizontal	150	0,5	5	0,49
	Vertical	50 [1]	0,5	5	0,49
		40	0,5	5	0,49
		200	0,5	5	0,49
MKUVE20..-KGT/20-F	Horizontal	100	1	5	0,91
		300	1	5	0,91
	Vertical	20	1	5	0,91
		25 [1]	1	5	0,91
		100	1	5	0,91
MKUVE20..-KGT/50-F	Horizontal	15	2,5	10	1,55
		60	2,5	10	1,55
		100	2,5	10	1,55
	Vertical	25	2,5	5	1,55
		50	2,5	5	1,55
		75	2,5	5	1,55

[1] Stroke length = 1 000 mm.

Combination			
Coupling	Coupling housing	Servo motor	Servo controller
KUP-50-40-2-10H7/11H7	KGEH15/36100-MKUVE-KGT	MOT-SMH60-C7-SINCOS	STUNG-CPX3S025-RS-I-O
KUP-50-40-2-10H7/11H7	KGEH15/36100-MKUVE-KGT	MOT-SMHA60-BR-SINCOS	STUNG-CPX3S025-RS-I-O
KUP-50-40-2-10H7/14H7	KGEH15/36000-MKUVE-KGT	MOT-SMHA82-BR-SINCOS	STUNG-CPX3S025-RS-I-O
KUP-50-40-2-10H7/11H7	KGEH15/36100-MKUVE-KGT	MOT-SMH60-C7-SINCOS	STUNG-CPX3S025-RS-I-O
KUP-50-40-2-10H7/14H7	KGEH15/36000-MKUVE-KGT	MOT-SMH82-SINCOS	STUNG-CPX3S025-RS-I-O
KUP-50-40-2-10H7/14H7	KGEH15/36000-MKUVE-KGT	MOT-SMHA82-BR-SINCOS	STUNG-CPX3S025-RS-I-O
KUP-50-40-2-10H7/19H7	KGEH15/36200-MKUVE-KGT	MOT-SMHA100-BR-SINCOS	STUNG-CPX3S063-RS-I-O
KUP-50-40-2-10H7/11H7	KGEH15/36100-MKUVE-KGT	MOT-SMH60-C7-SINCOS	STUNG-CPX3S025-RS-I-O
KUP-50-40-2-10H7/14H7	KGEH15/36000-MKUVE-KGT	MOT-SMH82-SINCOS	STUNG-CPX3S025-RS-I-O
KUP-50-40-2-10H7/14H7	KGEH15/36000-MKUVE-KGT	MOT-SMHA82-BR-SINCOS	STUNG-CPX3S025-RS-I-O
KUP-50-40-2-10H7/19H7	KGEH15/36200-MKUVE-KGT	MOT-SMHA100-BR-SINCOS	STUNG-CPX3S063-RS-I-O
KUP-50-40-2-10H7/14H7	KGEH15/36000-MKUVE-KGT	MOT-SMH82-SINCOS	STUNG-CPX3S025-RS-I-O
KUP-50-40-2-10H7/19H7	KGEH15/36200-MKUVE-KGT	MOT-SMH100-SINCOS	STUNG-CPX3S063-RS-I-O
KUP-50-40-2-10H7/19H7	KGEH15/36200-MKUVE-KGT	MOT-MH105-SINCOS	STUNG-CPX3S075-RS-I-O
KUP-50-40-2-10H7/14H7	KGEH15/36000-MKUVE-KGT	MOT-SMHA82-BR-SINCOS	STUNG-CPX3S025-RS-I-O
KUP-50-40-2-10H7/19H7	KGEH15/36200-MKUVE-KGT	MOT-SMHA100-BR-SINCOS	STUNG-CPX3S063-RS-I-O
KUP-50-40-2-10H7/19H7	KGEH15/36200-MKUVE-KGT	MOT-MHA105-BR-SINCOS	STUNG-CPX3S075-RS-I-O
KUP-50-40-2-11H7/13H7	KGEH20/36200-MKUVE-KGT	MOT-SMH60-C7-SINCOS	STUNG-CPX3S025-RS-I-O
KUP-50-40-2-13H7/14H7	KGEH20/36000-MKUVE-KGT	MOT-SMH82-SINCOS	STUNG-CPX3S025-RS-I-O
KUP-50-40-2-11H7/13H7	KGEH20/36200-MKUVE-KGT	MOT-SMHA60-BR-SINCOS	STUNG-CPX3S025-RS-I-O
KUP-50-40-2-13H7/14H7	KGEH20/36000-MKUVE-KGT	MOT-SMHA82-BR-SINCOS	STUNG-CPX3S025-RS-I-O
KUP-50-40-2-13H7/14H7	KGEH20/36000-MKUVE-KGT	MOT-SMHA82-BR-SINCOS	STUNG-CPX3S025-RS-I-O
KUP-50-40-2-11H7/13H7	KGEH20/36200-MKUVE-KGT	MOT-SMH60-C7-SINCOS	STUNG-CPX3S025-RS-I-O
KUP-50-40-2-13H7/14H7	KGEH20/36000-MKUVE-KGT	MOT-SMH82-SINCOS	STUNG-CPX3S025-RS-I-O
KUP-50-40-2-11H7/13H7	KGEH20/36200-MKUVE-KGT	MOT-SMHA60-BR-SINCOS	STUNG-CPX3S025-RS-I-O
KUP-50-40-2-13H7/14H7	KGEH20/36000-MKUVE-KGT	MOT-SMHA82-BR-SINCOS	STUNG-CPX3S025-RS-I-O
KUP-50-40-2-13H7/19H7	KGEH20/36100-MKUVE-KGT	MOT-SMHA100-BR-SINCOS	STUNG-CPX3S063-RS-I-O
KUP-50-40-2-13H7/14H7	KGEH20/36000-MKUVE-KGT	MOT-SMH82-SINCOS	STUNG-CPX3S025-RS-I-O
KUP-50-40-2-13H7/14H7	KGEH20/36000-MKUVE-KGT	MOT-SMHA82-BR-SINCOS	STUNG-CPX3S025-RS-I-O
KUP-50-40-2-13H7/14H7	KGEH20/36000-MKUVE-KGT	MOT-SMHA82-BR-SINCOS	STUNG-CPX3S025-RS-I-O
KUP-50-40-2-13H7/19H7	KGEH20/36100-MKUVE-KGT	MOT-SMHA100-BR-SINCOS	STUNG-CPX3S063-RS-I-O
KUP-50-40-2-13H7/14H7	KGEH20/36000-MKUVE-KGT	MOT-SMH82-SINCOS	STUNG-CPX3S025-RS-I-O
KUP-50-40-2-13H7/19H7	KGEH20/36100-MKUVE-KGT	MOT-SMH100-SINCOS	STUNG-CPX3S063-RS-I-O
KUP-50-40-2-13H7/14H7	KGEH20/36000-MKUVE-KGT	MOT-SMHA82-BR-SINCOS	STUNG-CPX3S025-RS-I-O
KUP-50-40-2-13H7/14H7	KGEH20/36000-MKUVE-KGT	MOT-SMHA82-BR-SINCOS	STUNG-CPX3S025-RS-I-O
KUP-50-40-2-13H7/19H7	KGEH20/36100-MKUVE-KGT	MOT-SMHA100-BR-SINCOS	STUNG-CPX3S063-RS-I-O
KUP-50-40-2-13H7/14H7	KGEH20/36000-MKUVE-KGT	MOT-SMH82-SINCOS	STUNG-CPX3S025-RS-I-O
KUP-50-40-2-13H7/19H7	KGEH20/36100-MKUVE-KGT	MOT-SMH100-SINCOS	STUNG-CPX3S063-RS-I-O
KUP-50-40-2-13H7/19H7	KGEH20/36100-MKUVE-KGT	MOT-MH105-SINCOS	STUNG-CPX3S075-RS-I-O
KUP-50-40-2-13H7/19H7	KGEH20/36100-MKUVE-KGT	MOT-SMHA100-BR-SINCOS	STUNG-CPX3S063-RS-I-O
KUP-50-40-2-13H7/19H7	KGEH20/36100-MKUVE-KGT	MOT-MHA105-BR-SINCOS	STUNG-CPX3S075-RS-I-O
KUP-560-56-13H7/24H7	KGEH20/36300-MKUVE-KGT	MOT-MHA145-BR-SINCOS	STUNG-CPX3S075-RS-I-O

Actuators with monorail guidance system and ball screw drive (continued)

Designation	Position	Characteristics			
		m_{max} kg	v_{max} m/s	a_{max} m/s²	v_m m/s
MKUSE25..-KGT/5-M	Horizontal	200 [1]	0,125	1,25	0,12
		1 000	0,21	2,5	0,21
	Vertical	50 [1]	0,125	1	0,12
		400	0,21	2,5	0,21
MKUSE25..-KGT/5-MM	Horizontal	200 [1]	0,125	1,25	0,12
		1 000	0,21	2,5	0,21
	Vertical	50 [1]	0,125	1	0,12
		400	0,21	2,5	0,21
MKUSE25..-KGT/10-M	Horizontal	100 [1]	0,43	2,5	0,4
		400	0,43	5	0,42
		800	0,43	5	0,42
		2 000 [1]	0,43	2,5	0,4
	Vertical	50 [1]	0,21	2,5	0,21
		150	0,43	5	0,42
		175	0,43	5	0,42
		300	0,43	5	0,42
MKUSE25..-KGT/10-MM	Horizontal	350	0,43	5	0,42
		800	0,43	5	0,42
		2 000 [1]	0,43	2,5	0,4
	Vertical	100	0,43	5	0,42
		125	0,43	2,5	0,41
		225	0,43	5	0,42
		250	0,43	2,5	0,41
		350	0,43	2,5	0,41
		350	0,43	5	0,42
MKUSE25..-KGT/20-M	Horizontal	150	0,86	5	0,8
		500	0,86	5	0,8
	Vertical	80	0,86	2,5	0,75
		125	0,86	5	0,8
		175	0,86	2,5	0,75
MKUSE25..-KGT/20-MM	Horizontal	150	0,86	5	0,8
		500	0,86	5	0,8
	Vertical	30	0,86	5	0,8
		75	0,86	5	0,8
		125	0,86	5	0,8
MKUSE25..-KGT/40-M	Horizontal	50	1,73	5	1,35
		200	1,73	5	1,35
		250	1,73	5	1,35
	Vertical	25	1,73	5	1,35
		55	1,73	5	1,35
		75	1,73	5	1,35
		140	1,73	5	1,35

[1] Stroke length = 1 000 mm.

Combination			
Coupling	Coupling housing	Servo motor	Servo controller
KUP-50-40-2-14H7/19H7	KGEH25/36000-MKUE-KGT	MOT-SMH82-SINCOS	STUNG-CPX3S025-SINCOS
KUP-50-40-2-19H7/19H7	KGEH25/36300-MKUE-KGT	MOT-SMH100-SINCOS	STUNG-CPX3S063-SINCOS
KUP-50-40-2-14H7/19H7	KGEH25/36000-MKUE-KGT	MOT-SMHA82-BR-SINCOS	STUNG-CPX3S025-SINCOS
KUP-50-40-2-19H7/19H7	KGEH25/36300-MKUE-KGT	MOT-SMHA100-BR-SINCOS	STUNG-CPX3S063-SINCOS
KUP-50-40-2-14H7/19H7	KGEH25/36000-MKUE-KGT	MOT-SMH82-SINCOS	STUNG-CPX3S025-SINCOS
KUP-50-40-2-19H7/19H7	KGEH25/36300-MKUE-KGT	MOT-SMH100-SINCOS	STUNG-CPX3S063-SINCOS
KUP-50-40-2-14H7/19H7	KGEH25/36000-MKUE-KGT	MOT-SMHA82-BR-SINCOS	STUNG-CPX3S025-SINCOS
KUP-50-40-2-19H7/19H7	KGEH25/36300-MKUE-KGT	MOT-SMHA100-BR-SINCOS	STUNG-CPX3S063-SINCOS
KUP-50-40-2-14H7/19H7	KGEH25/36000-MKUE-KGT	MOT-SMH82-SINCOS	STUNG-CPX3S025-SINCOS
KUP-50-40-2-19H7/19H7	KGEH25/36300-MKUE-KGT	MOT-SMH100-SINCOS	STUNG-CPX3S063-SINCOS
KUP-50-40-2-19H7/19H7	KGEH25/36300-MKUE-KGT	MOT-MH105-SINCOS	STUNG-CPX3S075-SINCOS
KUP-50-40-2-19H7/19H7	KGEH25/36300-MKUE-KGT	MOT-MH105-SINCOS	STUNG-CPX3S075-SINCOS
KUP-50-40-2-14H7/19H7	KGEH25/36000-MKUE-KGT	MOT-SMHA82-BR-SINCOS	STUNG-CPX3S025-SINCOS
KUP-50-40-2-19H7/19H7	KGEH25/36000-MKUE-KGT	MOT-SMHA100-BR-SINCOS	STUNG-CPX3S063-SINCOS
KUP-50-40-2-19H7/19H7	KGEH25/36300-MKUE-KGT	MOT-SMHA100-BR-SINCOS	STUNG-CPX3S075-SINCOS
KUP-50-40-2-19H7/19H7	KGEH25/36300-MKUE-KGT	MOT-MHA105-BR-SINCOS	STUNG-CPX3S075-SINCOS
KUP-50-40-2-19H7/19H7	KGEH25/36300-MKUE-KGT	MOT-SMH100-SINCOS	STUNG-CPX3S063-SINCOS
KUP-50-40-2-19H7/19H7	KGEH25/36300-MKUE-KGT	MOT-MH105-SINCOS	STUNG-CPX3S075-SINCOS
KUP-50-40-2-19H7/19H7	KGEH25/36300-MKUE-KGT	MOT-MH105-SINCOS	STUNG-CPX3S075-SINCOS
KUP-50-40-2-19H7/19H7	KGEH25/36300-MKUE-KGT	MOT-SMHA100-BR-SINCOS	STUNG-CPX3S063-SINCOS
KUP-50-40-2-19H7/19H7	KGEH25/36300-MKUE-KGT	MOT-SMHA100-BR-SINCOS	STUNG-CPX3S063-SINCOS
KUP-50-40-2-19H7/19H7	KGEH25/36300-MKUE-KGT	MOT-MHA105-BR-SINCOS	STUNG-CPX3S075-SINCOS
KUP-50-40-2-19H7/19H7	KGEH25/36300-MKUE-KGT	MOT-MHA105-BR-SINCOS	STUNG-CPX3S075-SINCOS
KUP-560-56-19H7/24H7	KGEH25/36100-MKUE-KGT	MOT-MHA145-08-BR-SINCOS	STUNG-CPX3S075-SINCOS
KUP-560-56-19H7/24H7	KGEH25/36100-MKUE-KGT	MOT-MHA145-08-BR-SINCOS	STUNG-CPX3S150-SINCOS
KUP-50-40-2-19H7/19H7	KGEH25/36300-MKUE-KGT	MOT-SMH100-SINCOS	STUNG-CPX3S063-SINCOS
KUP-50-40-2-19H7/19H7	KGEH25/36300-MKUE-KGT	MOT-MH105-SINCOS	STUNG-CPX3S075-SINCOS
KUP-50-40-2-19H7/19H7	KGEH25/36300-MKUE-KGT	MOT-SMHA100-BR-SINCOS	STUNG-CPX3S063-SINCOS
KUP-50-40-2-19H7/19H7	KGEH25/36300-MKUE-KGT	MOT-MHA105-BR-SINCOS	STUNG-CPX3S075-SINCOS
KUP-560-56-19H7/24H7	KGEH25/36100-MKUE-KGT	MOT-MHA145-08-BR-SINCOS	STUNG-CPX3S075-SINCOS
KUP-50-40-2-19H7/19H7	KGEH25/36300-MKUE-KGT	MOT-SMH100-SINCOS	STUNG-CPX3S063-SINCOS
KUP-50-40-2-19H7/19H7	KGEH25/36300-MKUE-KGT	MOT-MH105-SINCOS	STUNG-CPX3S075-SINCOS
KUP-560-56-19H7/24H7	KGEH25/36100-MKUE-KGT	MOT-MH145-08-SINCOS	STUNG-CPX3S075-SINCOS
KUP-50-40-2-19H7/19H7	KGEH25/36300-MKUE-KGT	MOT-SMHA100-BR-SINCOS	STUNG-CPX3S063-SINCOS
KUP-50-40-2-19H7/19H7	KGEH25/36300-MKUE-KGT	MOT-MHA105-BR-SINCOS	STUNG-CPX3S075-SINCOS
KUP-560-56-19H7/24H7	KGEH25/36100-MKUE-KGT	MOT-MHA145-08-BR-SINCOS	STUNG-CPX3S075-SINCOS
KUP-560-56-19H7/24H7	KGEH25/36100-MKUE-KGT	MOT-MHA145-15-BR-SINCOS	STUNG-CPX3S150-SINCOS

Proven drive combinations

Linear tables with shaft guidance system and ball screw drive

Designation	Position	Characteristics			
		m_{max} kg	v_{max} m/s	a_{max} m/s²	v_m m/s
LTE16..-1204-M **LTS16..-1204-M**	Horizontal	40	0,2	5	0,25
	Vertical	40	0,25	5	0,25
LTE20..-1605-M **LTE20..-1605-MM** **LTS20..-1605-M** **LTS20..-1605-MM**	Horizontal	75	0,25	5	0,25
	Vertical	70	0,25	5	0,25
		75	0,25	5	0,25
LTE20..-1610-M **LTS20..-1610-M** **LTE25..-1610-M** **LTS25..-1610-M**	Horizontal	25	0,5	5	0,49
		75	0,5	5	0,49
	Vertical	55	0,5	5	0,49
		75	0,5	5	0,49
LTE25..-1605-M **LTE25..-1605-MM** **LTS25..-1605-M** **LTS25..-1605-MM**	Horizontal	75	0,25	5	0,25
	Vertical	70	0,25	5	0,25
		75	0,25	5	0,25
LTE30..-2005-M **LTE30..-2005-MM** **LTS30..-2005-M** **LTS30..-2005-MM**	Horizontal	100 [1]	0,25	5	0,25
		100	0,25	2,5	0,25
	Vertical	30 [1]	0,25	5	0,25
		100 [1]	0,25	5	0,25
		100	0,25	2,5	0,25
LTE30..-2020-M **LTS30..-2020-M**	Horizontal	100	1	5	0,91
	Vertical	20	1	5	0,91
		25 [1]	1	5	0,91
		100	1	5	0,91
LTE30..-2050-M **LTS30..-2050-M**	Horizontal	15	2,5	10	1,55
		60	2,5	10	1,55
		100	2,5	10	1,55
	Vertical	25	2,5	5	1,55
		50	2,5	5	1,55
		75	2,5	5	1,55

[1] Stroke length = 1000 mm.

[2] Alternatively: KUP-50-40-2-9H7/11H7.

Combination			
Coupling	Coupling housing	Servo motor	Servo controller
KUP-50-25-9-5H7/11H7	KGEH16/36000-LTS	MOT-SMH60-C7-SINCOS	STUNG-CPX3S025-RS-I-O
KUP-50-25-9-5H7/11H7	KGEH16/36000-LTS	MOT-SMHA60-BR-SINCOS	STUNG-CPX3S025-RS-I-O
KUP-34-40-9-9H7/11H7[2)]	KGEH20/36100-LTS	MOT-SMH60-C7-SINCOS	STUNG-CPX3S025-RS-I-O
KUP-34-40-9-9H7/11H7[2)]	KGEH20/36100-LTS	MOT-SMHA60-BR-SINCOS	STUNG-CPX3S025-RS-I-O
KUP-50-40-2-H7/14H7	KGEH20/36200-LTS	MOT-SMHA82-BR-SINCOS	STUNG-CPX3S025-RS-I-O
KUP-34-40-9H7/11H7[2)]	KGEH20/36100-LTS	MOT-SMH60-C7-SINCOS	STUNG-CPX3S025-RS-I-O
KUP-50-40-2-9H7/14H7	KGEH20/36200-LTS	MOT-SMH82-SINCOS	STUNG-CPX3S025-RS-I-O
KUP-50-40-2-9H7/14H7	KGEH20/36200-LTS	MOT-SMHA82-BR-SINCOS	STUNG-CPX3S025-RS-I-O
KUP-50-40-2-9H7/19H7	KGEH20/36300-LTS	MOT-SMHA100-BR-SINCOS	STUNG-CPX3S063-RS-I-O
KUP-34-40-9H7/11H7[2)]	KGEH20/36100-LTS	MOT-SMH60-C7-SINCOS	STUNG-CPX3S025-RS-I-O
KUP-34-40-9H7/11H7[2)]	KGEH20/36100-LTS	MOT-SMHA60-C7-BR-SINCOS	STUNG-CPX3S025-RS-I-O
KUP-50-40-2-9H7/14H7	KGEH20/36200-LTS	MOT-SMHA82-BR-SINCOS	STUNG-CPX3S063-RS-I-O
KUP-50-40-2-10H7/13H7	KGEH20/36200-MKUVE-KGT	MOT-SMH60-C7-SINCOS	STUNG-CPX3S025-RS-I-O
KUP-50-40-2-10H7/14H7	KGEH20/36000-MKUVE-KGT	MOT-SMH82-SINCOS	STUNG-CPX3S025-RS-I-O
KUP-50-40-2-10H7/13H7	KGEH20/36200-MKUVE-KGT	MOT-SMHA60-C7-BR-SINCOS	STUNG-CPX3S025-RS-I-O
KUP-50-40-2-10H7/14H7	KGEH20/36000-MKUVE-KGT	MOT-SMHA82-BR-SINCOS	STUNG-CPX3S025-RS-I-O
KUP-50-40-2-10H7/14H7	KGEH20/36000-MKUVE-KGT	MOT-SMHA82-BR-SINCOS	STUNG-CPX3S025-RS-I-O
KUP-50-40-2-10H7/14H7	KGEH20/36000-MKUVE-KGT	MOT-SMH82-SINCOS	STUNG-CPX3S025-RS-I-O
KUP-50-40-2-10H7/14H7	KGEH20/36000-MKUVE-KGT	MOT-SMHA82-BR-SINCOS	STUNG-CPX3S025-RS-I-O
KUP-50-40-2-10H7/14H7	KGEH20/36000-MKUVE-KGT	MOT-SMHA82-BR-SINCOS	STUNG-CPX3S025-RS-I-O
KUP-50-40-2-10H7/19H7	KGEH20/36100-MKUVE-KGT	MOT-SMHA100-BR-SINCOS	STUNG-CPX3S063-RS-I-O
KUP-50-40-2-10H7/14H7	KGEH20/36000-MKUVE-KGT	MOT-SMH82-SINCOS	STUNG-CPX3S025-RS-I-O
KUP-50-40-2-10H7/19H7	KGEH20/36100-MKUVE-KGT	MOT-SMH100-SINCOS	STUNG-CPX3S063-RS-I-O
KUP-50-40-2-10H7/19H7	KGEH20/36100-MKUVE-KGT	MOT-MH105-08-SINCOS	STUNG-CPX3S075-RS-I-O
KUP-50-40-2-10H7/19H7	KGEH20/36100-MKUVE-KGT	MOT-SMHA100-BR-SINCOS	STUNG-CPX3S063-RS-I-O
KUP-50-40-2-10H7/19H7	KGEH20/36100-MKUVE-KGT	MOT-MHA105-08-BR-SINCOS	STUNG-CPX3S075-RS-I-O
KUP-560-56-10H7/24H7	KGEH20/36300-MKUVE-KGT	MOT-MHA105-08-BR-SINCOS	STUNG-CPX3S075-RS-I-O

Linear tables with shaft guidance system and ball screw drive (continued)

Designation	Position	Characteristics			
		m_{max} kg	v_{max} m/s	a_{max} m/s²	v_m m/s
LTE40..-2505-M LTE50..-2505-M LTS40..-2505-M LTS50..-2505-M	Horizontal	75 [1]	0,25	5	0,25
		500	0,25	2,5	0,25
	Vertical	100	0,25	5	0,25
		400	0,25	5	0,25
		500	0,25	5	0,25
LTE40..-2505-MM LTE50..-2505-MM LTS40..-2505-MM LTS50..-2505-MM	Horizontal	50 [1]	0,25	5	0,25
		500	0,25	2,5	0,25
	Vertical	100	0,25	5	0,25
		400	0,25	5	0,25
		500	0,25	5	0,25
LTE40..-3210-M LTE50..-3210-M LTS40..-3210-M LTS50..-3210-M	Horizontal	100 [1]	0,43	2,5	0,4
		300	0,43	5	0,42
		500 [1]	0,43	5	0,41
		500	0,43	5	0,42
	Vertical	75	0,43	5	0,42
		175	0,43	2,5	0,41
		275	0,43	5	0,42
		400	0,43	5	0,42
		500	0,43	5	0,42
LTE40..-3210-MM LTE50..-3210-MM LTS40..-3210-MM LTS50..-3210-MM	Horizontal	200	0,43	5	0,42
		400	0,43	5	0,42
		500 [1]	0,43	5	0,41
	Vertical	100	0,43	5	0,42
		150 [1]	0,43	2,5	0,4
		225	0,43	5	0,42
		275	0,43	2,5	0,41
		350	0,43	2,5	0,41
		500	0,43	5	0,42
LTE40..-3220-M LTE50..-3220-M LTS40..-3220-M LTS50..-3220-M	Horizontal	25 [1]	0,5	5	0,48
		150	0,86	5	0,8
		225 [1]	0,86	5	0,75
		450	0,86	5	0,8
		500	0,86	5	0,8
	Vertical	75	0,86	2,5	0,75
		125	0,86	5	0,8
		170	0,86	2,5	0,75
		350	0,86	2,5	0,75

[1] Stroke length = 1000 mm.

Combination			
Coupling	Coupling housing	Servo motor	Servo controller
KUP-50-40-2-11H7/16H7	KGEH40/36000-LTS-KGT/25	MOT-SMH60-C7-SINCOS	STUNG-CPX3S025-RS-I-O
KUP-50-40-2-14H7/16H7	KGEH40/36100-LTS-KGT/25	MOT-SMH82-SINCOS	STUNG-CPX3S025-RS-I-O
KUP-50-40-2-14H7/16H7	KGEH40/36100-LTS-KGT/25	MOT-SMHA82-BR-SINCOS	STUNG-CPX3S025-RS-I-O
KUP-560-56-16H7/19H7	KGEH40/36200-LTS-KGT/25	MOT-SMHA100-BR-SINCOS	STUNG-CPX3S063-RS-I-O
KUP-560-56-16H7/19H7	KGEH40/36200-LTS-KGT/25	MOT-MHA105-08-08-BR-SINCOS	STUNG-CPX3S075-RS-I-O
KUP-50-40-2-11H7/16H7	KGEH40/36000-LTS-KGT/25	MOT-SMH60-C7-SINCOS	STUNG-CPX3S025-RS-I-O
KUP-50-40-2-14H7/16H7	KGEH40/36100-LTS-KGT/25	MOT-SMH82-SINCOS	STUNG-CPX3S025-RS-I-O
KUP-50-40-2-14H7/16H7	KGEH40/36100-LTS-KGT/25	MOT-SMHA82-BR-SINCOS	STUNG-CPX3S025-RS-I-O
KUP-560-56-16H7/19H7	KGEH40/36200-LTS-KGT/25	MOT-SMHA100-BR-SINCOS	STUNG-CPX3S063-RS-I-O
KUP-560-56-16H7/19H7	KGEH40/36200-LTS-KGT/25	MOT-MHA105-08-08-BR-SINCOS	STUNG-CPX3S075-RS-I-O
KUP-50-40-2-14H7/16H7	KGEH40/36000-LTS-KGT/32	MOT-SMH82-SINCOS	STUNG-CPX3S025-RS-I-O
KUP-50-40-2-16H7/19H7	KGEH40/36100-LTS-KGT/32	MOT-SMH100-SINCOS	STUNG-CPX3S063-RS-I-O
KUP-50-40-2-16H7/19H7	KGEH40/36100-LTS-KGT/32	MOT-SMH100-SINCOS	STUNG-CPX3S063-RS-I-O
KUP-50-40-2-16H7/19H7	KGEH40/36100-LTS-KGT/32	MOT-MH105-08-08-SINCOS	STUNG-CPX3S075-RS-I-O
KUP-50-40-2-16H7/19H7	KGEH40/36100-LTS-KGT/32	MOT-SMHA100-BR-SINCOS	STUNG-CPX3S063-RS-I-O
KUP-50-40-2-16H7/19H7	KGEH40/36100-LTS-KGT/32	MOT-SMHA100-BR-SINCOS	STUNG-CPX3S063-RS-I-O
KUP-50-40-2-16H7/19H7	KGEH40/36100-LTS-KGT/32	MOT-MHA105-08-08-BR-SINCOS	STUNG-CPX3S075-RS-I-O
KUP-560-56-16H7/24H7	KGEH40/36200-LTS-KGT/32	MOT-MHA145-08-BR-SINCOS	STUNG-CPX3S150-RS-I-O
KUP-560-56-16H7/24H7	KGEH40/36200-LTS-KGT/32	MOT-MHA145-15-BR-SINCOS	STUNG-CPX3S150-RS-I-O
KUP-50-40-2-16H7/19H7	KGEH40/36100-LTS-KGT/32	MOT-SMH100-SINCOS	STUNG-CPX3S063-RS-I-O
KUP-50-40-2-16H7/19H7	KGEH40/36100-LTS-KGT/32	MOT-MH105-08-08-SINCOS	STUNG-CPX3S075-RS-I-O
KUP-50-40-2-16H7/19H7	KGEH40/36100-LTS-KGT/32	MOT-MH105-08-08-SINCOS	STUNG-CPX3S075-RS-I-O
KUP-50-40-2-16H7/19H7	KGEH40/36100-LTS-KGT/32	MOT-SMHA100-BR-SINCOS	STUNG-CPX3S063-RS-I-O
KUP-50-40-2-16H7/19H7	KGEH40/36100-LTS-KGT/32	MOT-SMHA100-BR-SINCOS	STUNG-CPX3S063-RS-I-O
KUP-50-40-2-16H7/19H7	KGEH40/36100-LTS-KGT/32	MOT-MHA105-08-08-BR-SINCOS	STUNG-CPX3S075-RS-I-O
KUP-50-40-2-16H7/19H7	KGEH40/36100-LTS-KGT/32	MOT-MHA105-08-08-BR-SINCOS	STUNG-CPX3S075-RS-I-O
KUP-560-56-16H7/24H7	KGEH40/36200-LTS-KGT/32	MOT-MHA145-08-BR-SINCOS	STUNG-CPX3S075-RS-I-O
KUP-560-56-16H7/24H7	KGEH40/36200-LTS-KGT/32	MOT-MHA145-15-BR-SINCOS	STUNG-CPX3S150-RS-I-O
KUP-50-40-2-14H7/16H7	KGEH40/36000-LTS-KGT/32	MOT-SMH82-SINCOS	STUNG-CPX3S025-RS-I-O
KUP-50-40-2-16H7/19H7	KGEH40/36100-LTS-KGT/32	MOT-SMH100-SINCOS	STUNG-CPX3S063-RS-I-O
KUP-50-40-2-16H7/19H7	KGEH40/36100-LTS-KGT/32	MOT-SMH100-SINCOS	STUNG-CPX3S063-RS-I-O
KUP-50-40-2-16H7/19H7	KGEH40/36100-LTS-KGT/32	MOT-MH105-08-08-SINCOS	STUNG-CPX3S075-RS-I-O
KUP-560-56-16H7/24H7	KGEH40/36200-LTS-KGT/32	MOT-MH145-08-SINCOS	STUNG-CPX3S075-RS-I-O
KUP-50-40-2-16H7/19H7	KGEH40/36100-LTS-KGT/32	MOT-SMHA100-BR-SINCOS	STUNG-CPX3S063-RS-I-O
KUP-50-40-2-16H7/19H7	KGEH40/36100-LTS-KGT/32	MOT-MHA105-08-08-BR-SINCOS	STUNG-CPX3S075-RS-I-O
KUP-560-56-16H7/24H7	KGEH40/36200-LTS-KGT/32	MOT-MHA145-08-BR-SINCOS	STUNG-CPX3S075-RS-I-O
KUP-560-56-16H7/24H7	KGEH40/36200-LTS-KGT/32	MOT-MHA145-15-BR-SINCOS	STUNG-CPX3S150-RS-I-O

Linear tables with shaft guidance system and ball screw drive (continued)

Designation	Position	Characteristics			
		m_{max} kg	v_{max} m/s	a_{max} m/s^2	v_m m/s
LTE40..-3220-MM **LTE50..-3220-MM** **LTS40..-3220-MM** **LTS50..-3220-MM**	Horizontal	150	0,86	5	0,8
		450	0,86	5	0,8
		500	0,86	5	0,8
	Vertical	35	0,86	5	0,8
		100	0,86	5	0,8
		135	0,86	5	0,8
		300	0,86	5	0,8
LTE40..-3240-M **LTE50..-3240-M** **LTS40..-3240-M** **LTS50..-3240-M**	Horizontal	30	1,73	5	1,35
		100	1,73	5	1,35
		125 [1]	1,73	5	1,08
		200	1,73	5	1,35
		350	1,73	5	1,35
	Vertical	25	1,73	5	1,35
		50	1,73	5	1,35
		75	1,73	5	1,35
		150	1,73	5	1,35

[1] Stroke length = 1000 mm.

Combination			
Coupling	Coupling housing	Servo motor	Servo controller
KUP-50-40-2-16H7/19H7	KGEH40/36100-LTS-KGT/32	MOT-SMH100-SINCOS	STUNG-CPX3S063-RS-I-O
KUP-50-40-2-16H7/19H7	KGEH40/36100-LTS-KGT/32	MOT-MH105-08-08-SINCOS	STUNG-CPX3S075-RS-I-O
KUP-560-56-16H7/24H7	KGEH40/36200-LTS-KGT/32	MOT-MH145-08-SINCOS	STUNG-CPX3S075-RS-I-O
KUP-50-40-2-16H7/19H7	KGEH40/36100-LTS-KGT/32	MOT-SMHA100-BR-SINCOS	STUNG-CPX3S063-RS-I-O
KUP-50-40-2-16H7/19H7	KGEH40/36100-LTS-KGT/32	MOT-MHA105-08-08-BR-SINCOS	STUNG-CPX3S075-RS-I-O
KUP-560-56-16H7/24H7	KGEH40/36200-LTS-KGT/32	MOT-MHA145-08-BR-SINCOS	STUNG-CPX3S075-RS-I-O
KUP-560-56-16H7/24H7	KGEH40/36200-LTS-KGT/32	MOT-MHA145-15-BR-SINCOS	STUNG-CPX3S150-RS-I-O
KUP-50-40-2-16H7/19H7	KGEH40/36100-LTS-KGT/32	MOT-SMH100-SINCOS	STUNG-CPX3S063-RS-I-O
KUP-50-40-2-16H7/19H7	KGEH40/36100-LTS-KGT/32	MOT-MH105-08-SINCOS	STUNG-CPX3S075-RS-I-O
KUP-50-40-2-16H7/19H7	KGEH40/36100-LTS-KGT/32	MOT-MH105-08-SINCOS	STUNG-CPX3S075-RS-I-O
KUP-560-56-16H7/24H7	KGEH40/36200-LTS-KGT/32	MOT-MH145-08-SINCOS	STUNG-CPX3S075-RS-I-O
KUP-560-56-16H7/24H7	KGEH40/36200-LTS-KGT/32	MOT-MH145-15-SINCOS	STUNG-CPX3S150-RS-I-O
KUP-50-40-2-16H7/19H7	KGEH40/36100-LTS-KGT/32	MOT-SMHA100-BR-SINCOS	STUNG-CPX3S063-RS-I-O
KUP-50-40-2-16H7/19H7	KGEH40/36100-LTS-KGT/32	MOT-MHA105-08-BR-SINCOS	STUNG-CPX3S075-RS-I-O
KUP-560-56-16H7/24H7	KGEH40/36200-LTS-KGT/32	MOT-MHA145-08-BR-SINCOS	STUNG-CPX3S075-RS-I-O
KUP-560-56-16H7/24H7	KGEH40/36200-LTS-KGT/32	MOT-MHA145-15-BR-SINCOS	STUNG-CPX3S150-RS-I-O

Proven drive combinations

High precision linear tables with monorail guidance system and ball screw drive

Designation	Position	Characteristics			
		m_{max} kg	v_{max} m/s	a_{max} m/s²	v_m m/s
LTP15-185-2005-F **LTP15-275-2005-F** **LTPG15-185-2005-F** **LTPG15-275-2005-F**	Horizontal	150[1)]	0,25	5	0,25
		600	0,25	2,5	0,25
	Vertical	100	0,25	5	0,25
		400	0,25	5	0,25
		600	0,25	5	0,25
LTP15-185-2005-FM **LTP15-275-2005-FM** **LTPG15-185-2005-FM** **LTPG15-275-2005-FM**	Horizontal	100[1)]	0,25	5	0,25
		600	0,25	2,5	0,25
	Vertical	100	0,25	5	0,25
		400	0,25	5	0,25
		600	0,25	5	0,25
LTP15-185-2020-F **LTP15-275-2020-F** **LTPG15-185-2020-F** **LTPG15-275-2020-F**	Horizontal	100	1	5	0,91
		300	1	5	0,91
	Vertical	25	0,5	5	0,48
		85	1	5	0,91
		150	1	5	0,91
LTP25-325-3205-F **LTPG25-325-3205-F**	Horizontal	200[1)]	0,125	1,25	0,12
		700	0,21	2,5	0,21
		1 500	0,21	2,5	0,21
	Vertical	150[1)]	0,21	5	0,21
		550	0,21	2,5	0,21
		700[1)]	0,21	2,5	0,21
		825	0,21	1,25	0,21
LTP25-325-3205-FM **LTPG25-325-3205-FM**	Horizontal	200[1)]	0,125	1	0,12
		700	0,21	2,5	0,21
		1500	0,21	2,5	0,21
	Vertical	150[1)]	0,21	5	0,21
		550	0,21	2,5	0,21
		700[1)]	0,21	2,5	0,21
		825	0,21	1,25	0,21

[1)] Stroke length = 1 000 mm.

Combination			
Coupling	Coupling housing	Servo motor	Servo controller
KUP-50-40-2-11H7/11H7	KGEH20/36200-MKUVE-KGT	MOT-SMH60-C7-SINCOS	STUNG-CPX3S025-RS-I-O
KUP-50-40-2-11H7/14H7	KGEH20/36000-MKUVE-KGT	MOT-SMH82-SINCOS	STUNG-CPX3S025-RS-I-O
KUP-50-40-2-11H7/14H7	KGEH20/36000-MKUVE-KGT	MOT-SMHA82-BR-SINCOS	STUNG-CPX3S025-RS-I-O
KUP-50-40-2-11H7/19H7	KGEH20/36100-MKUVE-KGT	MOT-SMHA100-BR-SINCOS	STUNG-CPX3S063-RS-I-O
KUP-50-40-2-11H7/19H7	KGEH20/36100-MKUVE-KGT	MOT-MHA105-08-BR-SINCOS	STUNG-CPX3S075-RS-I-O
KUP-50-40-2-11H7/11H7	KGEH20/36200-MKUVE-KGT	MOT-SMH60-C7-SINCOS	STUNG-CPX3S025-RS-I-O
KUP-50-40-2-11H7/14H7	KGEH20/36000-MKUVE-KGT	MOT-SMH82-SINCOS	STUNG-CPX3S025-RS-I-O
KUP-50-40-2-11H7/14H7	KGEH20/36000-MKUVE-KGT	MOT-SMHA82-BR-SINCOS	STUNG-CPX3S025-RS-I-O
KUP-50-40-2-11H7/19H7	KGEH20/36100-MKUVE-KGT	MOT-SMHA100-BR-SINCOS	STUNG-CPX3S063-RS-I-O
KUP-50-40-2-11H7/19H7	KGEH20/36100-MKUVE-KGT	MOT-MHA105-08-BR-SINCOS	STUNG-CPX3S075-RS-I-O
KUP-50-40-2-11H7/14H7	KGEH20/36000-MKUVE-KGT	MOT-SMH82-SINCOS	STUNG-CPX3S025-RS-I-O
KUP-50-40-2-11H7/19H7	KGEH20/36100-MKUVE-KGT	MOT-SMH100-SINCOS	STUNG-CPX3S063-RS-I-O
KUP-50-40-2-11H7/14H7	KGEH20/36000-MKUVE-KGT	MOT-SMHA82-BR-SINCOS	STUNG-CPX3S025-RS-I-O
KUP-50-40-2-11H7/19H7	KGEH20/36100-MKUVE-KGT	MOT-SMHA100-BR-SINCOS	STUNG-CPX3S063-RS-I-O
KUP-50-40-2-11H7/19H7	KGEH20/36100-MKUVE-KGT	MOT-SMHA105-08-BR-SINCOS	STUNG-CPX3S075-RS-I-O
KUP-50-40-2-14H7/19H7	KGEH25/36000-MKUE-KGT	MOT-SMH82-SINCOS	STUNG-CPX3S025-RS-I-O
KUP-50-40-2-19H7/19H7	KGEH25/36300-MKUE-KGT	MOT-SMH100-SINCOS	STUNG-CPX3S063-RS-I-O
KUP-50-40-2-19H7/19H7	KGEH25/36300-MKUE-KGT	MOT-SMH100-SINCOS	STUNG-CPX3S075-RS-I-O
KUP-50-40-2-19H7/19H7	KGEH25/36300-MKUE-KGT	MOT-SMHA100-BR-SINCOS	STUNG-CPX3S063-RS-I-O
KUP-50-40-2-19H7/19H7	KGEH25/36300-MKUE-KGT	MOT-MHA105-08-BR-SINCOS	STUNG-CPX3S075-RS-I-O
KUP-50-40-2-19H7/19H7	KGEH25/36300-MKUE-KGT	MOT-MHA105-08-BR-SINCOS	STUNG-CPX3S075-RS-I-O
KUP-560-56-19H7/24H7	KGEH25/36100-MKUE-KGT	MOT-MHA145-08-BR-SINCOS	STUNG-CPX3S150-RS-I-O
KUP-50-40-2-14H7/19H7	KGEH25/36000-MKUE-KGT	MOT-SMH82-SINCOS	STUNG-CPX3S025-RS-I-O
KUP-50-40-2-19H7/19H7	KGEH25/36300-MKUE-KGT	MOT-SMH100-SINCOS	STUNG-CPX3S063-RS-I-O
KUP-50-40-2-19H7/19H7	KGEH25/36300-MKUE-KGT	MOT-SMH100-SINCOS	STUNG-CPX3S075-RS-I-O
KUP-50-40-2-19H7/19H7	KGEH25/36300-MKUE-KGT	MOT-SMHA100-BR-SINCOS	STUNG-CPX3S063-RS-I-O
KUP-50-40-2-19H7/19H7	KGEH25/36300-MKUE-KGT	MOT-MHA105-08-BR-SINCOS	STUNG-CPX3S075-RS-I-O
KUP-50-40-2-19H7/19H7	KGEH25/36300-MKUE-KGT	MOT-MHA105-08-BR-SINCOS	STUNG-CPX3S075-RS-I-O
KUP-560-56-19H7/24H7	KGEH25/36100-MKUE-KGT	MOT-MHA145-08-BR-SINCOS	STUNG-CPX3S150-RS-I-O

High precision linear tables with monorail guidance system and ball screw drive
(continued)

Designation	Position	Characteristics			
		m_{max} kg	v_{max} m/s	a_{max} m/s²	v_m m/s
LTP25-325-3210-F LTPG25-325-3210-F	Horizontal	100[1)]	0,43	2,5	0,4
		300	0,43	5	0,42
		500[1)]	0,43	5	0,41
		800	0,43	5	0,42
		1 200[1)]	0,43	5	0,41
	Vertical	75	0,43	5	0,42
		175	0,43	2,5	0,41
		275	0,43	5	0,42
		400	0,43	5	0,42
		700	0,43	5	0,42
LTP25-325-3210-FM LTPG25-325-3210-FM	Horizontal	200	0,43	5	0,42
		400	0,43	5	0,42
		750[1)]	0,43	5	0,41
	Vertical	100	0,43	5	0,42
		150[1)]	0,43	2,5	0,4
		225	0,43	5	0,42
		275	0,43	2,5	0,41
		350	0,43	2,5	0,41
		650	0,43	5	0,42
LTP25-325-3220-F LTPG25-325-3220-F	Horizontal	25[1)]	0,5	5	0,48
		150	0,86	5	0,8
		225[1)]	0,86	5	0,75
		450	0,86	5	0,8
		525[1)]	0,86	5	0,8
	Vertical	75	0,86	2,5	0,75
		125	0,86	5	0,8
		170	0,86	2,5	0,75
		350	0,86	2,5	0,75
LTP25-325-3220-FM LTPG25-325-3220-FM	Horizontal	150	0,86	5	0,8
		450	0,86	5	0,8
		500	0,86	5	0,8
	Vertical	35	0,86	5	0,8
		100	0,86	5	0,8
		135	0,86	5	0,8
		300	0,86	5	0,8
LTP25-325-3240-F LTPG25-325-3240-F	Horizontal	30	1,73	5	1,35
		100	1,73	5	1,35
		125[1)]	1,73	5	1,08
		200	1,73	5	1,35
		350	1,73	5	1,35
	Vertical	25	1,73	5	1,35
		50	1,73	5	1,35
		75	1,73	5	1,35
		150	1,73	5	1,35

1) Stroke length = 1 000 mm.

Combination			
Coupling	Coupling housing	Servo motor	Servo controller
KUP-50-40-2-14H7/19H7	KGEH25/36000-MKUE-KGT	MOT-SMH82-SINCOS	STUNG-CPX3S025-RS-I-O
KUP-50-40-2-19H7/19H7	KGEH25/36300-MKUE-KGT	MOT-SMH100-SINCOS	STUNG-CPX3S063-RS-I-O
KUP-50-40-2-19H7/19H7	KGEH25/36300-MKUE-KGT	MOT-SMH100-SINCOS	STUNG-CPX3S063-RS-I-O
KUP-50-40-2-19H7/19H7	KGEH25/36300-MKUE-KGT	MOT-MH105-08-SINCOS	STUNG-CPX3S075-RS-I-O
KUP-50-40-2-19H7/19H7	KGEH25/36300-MKUE-KGT	MOT-MH105-08-SINCOS	STUNG-CPX3S075-RS-I-O
KUP-50-40-2-19H7/19H7	KGEH25/36000-MKUE-KGT	MOT-SMHA100-BR-SINCOS	STUNG-CPX3S063-RS-I-O
KUP-50-40-2-19H7/19H7	KGEH25/36000-MKUE-KGT	MOT-SMHA100-BR-SINCOS	STUNG-CPX3S063-RS-I-O
KUP-50-40-2-19H7/19H7	KGEH25/36300-MKUE-KGT	MOT-MHA105-08-BR-SINCOS	STUNG-CPX3S075-RS-I-O
KUP-560-56-19H7/24H7	KGEH25/36100-MKUE-KGT	MOT-MHA145-08-BR-SINCOS	STUNG-CPX3S150-RS-I-O
KUP-560-56-19H7/24H7	KGEH25/36100-MKUE-KGT	MOT-MHA145-15-BR-SINCOS	STUNG-CPX3S150-RS-I-O
KUP-50-40-2-19H7/19H7	KGEH25/36300-MKUE-KGT	MOT-SMH100-SINCOS	STUNG-CPX3S063-RS-I-O
KUP-50-40-2-19H7/19H7	KGEH25/36300-MKUE-KGT	MOT-MH105-08-SINCOS	STUNG-CPX3S075-RS-I-O
KUP-50-40-2-19H7/19H7	KGEH25/36300-MKUE-KGT	MOT-MH105-08-SINCOS	STUNG-CPX3S075-RS-I-O
KUP-50-40-2-19H7/19H7	KGEH25/36300-MKUE-KGT	MOT-SMHA100-BR-SINCOS	STUNG-CPX3S063-RS-I-O
KUP-50-40-2-19H7/19H7	KGEH25/36300-MKUE-KGT	MOT-SMHA100-BR-SINCOS	STUNG-CPX3S063-RS-I-O
KUP-50-40-2-19H7/19H7	KGEH25/36300-MKUE-KGT	MOT-MHA105-08-BR-SINCOS	STUNG-CPX3S075-RS-I-O
KUP-50-40-2-19H7/19H7	KGEH25/36300-MKUE-KGT	MOT-MHA105-08-BR-SINCOS	STUNG-CPX3S075-RS-I-O
KUP-560-56-19H7/24H7	KGEH25/36100-MKUE-KGT	MOT-MHA145-08-BR-SINCOS	STUNG-CPX3S075-RS-I-O
KUP-560-56-19H7/24H7	KGEH25/36100-MKUE-KGT	MOT-MHA145-15-BR-SINCOS	STUNG-CPX3S150-RS-I-O
KUP-50-40-2-14H7/19H7	KGEH25/36000-MKUE-KGT	MOT-SMH82-SINCOS	STUNG-CPX3S025-RS-I-O
KUP-50-40-2-19H7/19H7	KGEH25/36300-MKUE-KGT	MOT-SMH100-SINCOS	STUNG-CPX3S063-RS-I-O
KUP-50-40-2-19H7/19H7	KGEH25/36300-MKUE-KGT	MOT-SMH100-SINCOS	STUNG-CPX3S063-RS-I-O
KUP-50-40-2-19H7/19H7	KGEH25/36300-MKUE-KGT	MOT-MH105-08-SINCOS	STUNG-CPX3S075-RS-I-O
KUP-560-56-19H7/24H7	KGEH25/36100-MKUE-KGT	MOT-MH145-08-SINCOS	STUNG-CPX3S075-RS-I-O
KUP-50-40-2-19H7/19H7	KGEH25/36300-MKUE-KGT	MOT-SMH100-SINCOS	STUNG-CPX3S063-RS-I-O
KUP-50-40-2-19H7/19H7	KGEH25/36300-MKUE-KGT	MOT-MHA105-08-BR-SINCOS	STUNG-CPX3S075-RS-I-O
KUP-560-56-19H7/24H7	KGEH25/36100-MKUE-KGT	MOT-MHA145-08-BR-SINCOS	STUNG-CPX3S075-RS-I-O
KUP-560-56-19H7/24H7	KGEH25/36100-MKUE-KGT	MOT-MHA145-15-BR-SINCOS	STUNG-CPX3S150-RS-I-O
KUP-50-40-2-19H7/19H7	KGEH25/36300-MKUE-KGT	MOT-SMH100-SINCOS	STUNG-CPX3S063-RS-I-O
KUP-50-40-2-19H7/19H7	KGEH25/36300-MKUE-KGT	MOT-MH105-08-SINCOS	STUNG-CPX3S075-RS-I-O
KUP-560-56-19H7/24H7	KGEH25/36100-MKUE-KGT	MOT-MH145-08-SINCOS	STUNG-CPX3S075-RS-I-O
KUP-50-40-2-19H7/19H7	KGEH25/36300-MKUE-KGT	MOT-SMHA100-BR-SINCOS	STUNG-CPX3S063-RS-I-O
KUP-50-40-2-19H7/19H7	KGEH25/36300-MKUE-KGT	MOT-MHA105-08-BR-SINCOS	STUNG-CPX3S075-RS-I-O
KUP-560-56-19H7/24H7	KGEH25/36100-MKUE-KGT	MOT-MHA145-08-BR-SINCOS	STUNG-CPX3S075-RS-I-O
KUP-560-56-19H7/24H7	KGEH25/36100-MKUE-KGT	MOT-MHA145-15-BR-SINCOS	STUNG-CPX3S150-RS-I-O
KUP-50-40-2-19H7/19H7	KGEH25/36300-MKUE-KGT	MOT-SMH100-SINCOS	STUNG-CPX3S063-RS-I-O
KUP-50-40-2-19H7/19H7	KGEH25/36300-MKUE-KGT	MOT-MH105-08-SINCOS	STUNG-CPX3S075-RS-I-O
KUP-50-40-2-19H7/19H7	KGEH25/36300-MKUE-KGT	MOT-MH105-08-SINCOS	STUNG-CPX3S075-RS-I-O
KUP-560-56-19H7/24H7	KGEH25/36100-MKUE-KGT	MOT-MH145-08-SINCOS	STUNG-CPX3S075-RS-I-O
KUP-560-56-19H7/24H7	KGEH25/36100-MKUE-KGT	MOT-MH145-15-SINCOS	STUNG-CPX3S150-RS-I-O
KUP-50-40-2-19H7/19H7	KGEH25/36300-MKUE-KGT	MOT-SMHA100-BR-SINCOS	STUNG-CPX3S063-RS-I-O
KUP-50-40-2-19H7/19H7	KGEH25/36300-MKUE-KGT	MOT-MHA105-08-BR-SINCOS	STUNG-CPX3S075-RS-I-O
KUP-560-56-19H7/24H7	KGEH25/36100-MKUE-KGT	MOT-MHA145-08-BR-SINCOS	STUNG-CPX3S075-RS-I-O
KUP-560-56-19H7/24H7	KGEH25/36100-MKUE-KGT	MOT-MHA145-15-BR-SINCOS	STUNG-CPX3S150-RS-I-O

Electric drives and controls for linear actuators and linear tables

In appropriate configurations for all series of driven linear units, Schaeffler also offers the optimally suitable combinations of electric drives and controls. For all linear units, finely graduated servo motors and precise planetary gearboxes are available for the wide range of possible applications.

For control of the motors, the most modern control technologies are of course available and offer the prospect of high performance for linear actuators. For integration in the peripheral systems of the machine, all important field bus interfaces as well as digital inputs and outputs with a 24-V PLC level are available as options. Commissioning of the controllers can be carried out by means of a user-friendly commissioning tool, in addition to which preliminary commissioning with the linear actuator or linear table is offered as a service.

The highly dynamic servo motors are available with an absolute encoder or resolver and with or without a holding brake. Connections to the controller can be made easily and quickly using dedicated cables available in various standard lengths. For torque adjustment, the customer can select from single stage and twin stage gearboxes with low backlash values.

Further accessories include dedicated connection cables for the controller, mains filters, ballast resistors, motor chokes and various proximity switches for mounting on the linear actuators.

With the aid of these products, we can provide a reliable, rapid and economical solution for your positioning task.

For processing and detailing of the appropriate request, we recommend use of the datasheet in the appendix. A completed datasheet containing the mechanical and electrical requirements can be used as the basis for competent production selection and advice by the Schaeffler application engineering facilities and engineering service functions.

An aid to making decisions in the selection of controllers can be found on page 721.

The INA linear actuators and linear tables can also be equipped and supplied with other motors and controllers (drive and control components). In this case, please consult Schaeffler.

Selection of controllers

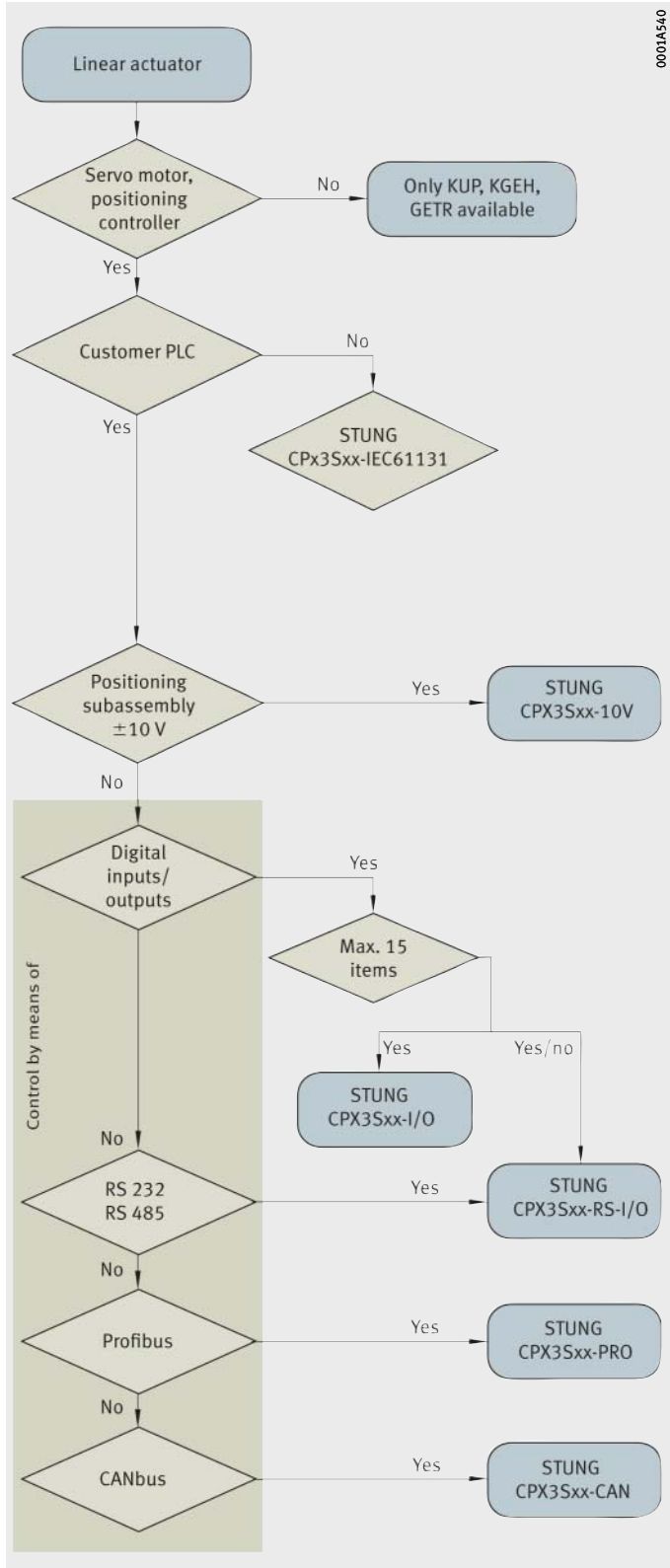

Figure 1
Flow chart

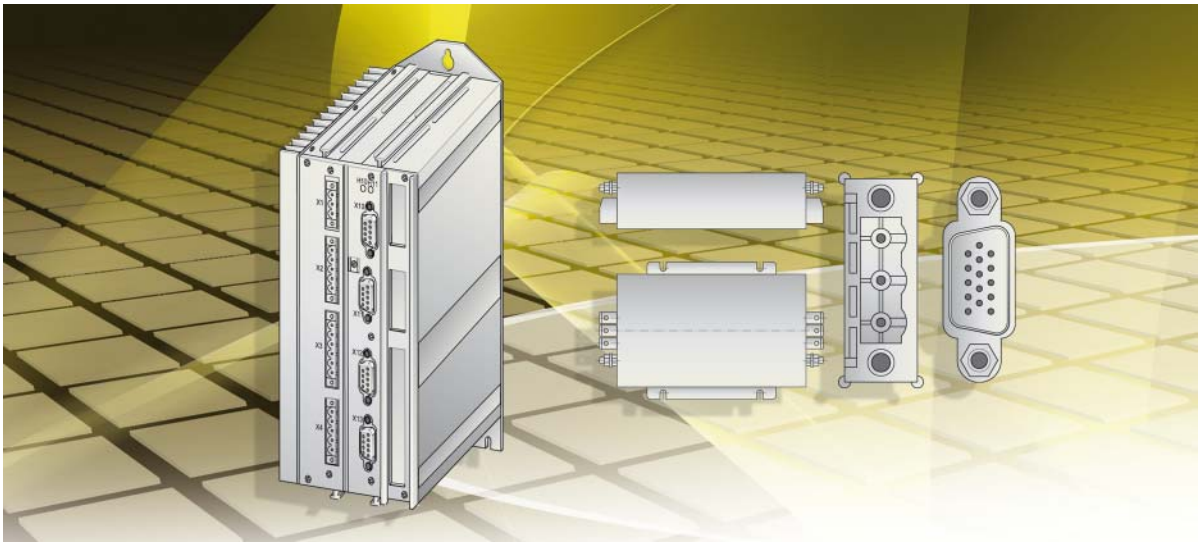

Digital servo controller

Digital servo controller

Digital servo controller

STUNG-CPX3

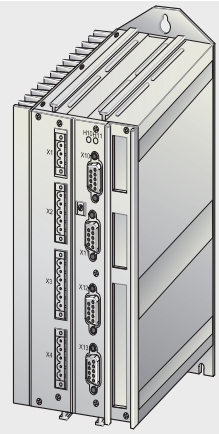

000179C9

Digital servo controller

Features

The controller STUNG-CPX3 is an intelligent servo positional controller that, due to its modular structure, can be used for a broad spectrum of different applications.

It can be used with all linear actuators of various drive types and with all linear tables.

With the appropriate feedback module, it can also be used to control the actuator with direct drive MKUVS42-LM (linear motor).

The user thus has access to an optimally matched, dynamic and precise positioning system for fulfilling his motion task.

The controller STUNG-CPX3 is a compact servo controller in an enclosed aluminium housing for installation in a control cabinet. All connectors are easily accessible to the electrician and the compact construction allows simple integration in the control cabinet or machine. Since almost all the connectors are of the push-fit type, installation time is considerably reduced.

Depending on the power level, it is operated directly from the 230-V alternating current network or from a 400-V three-phase network and the power rating is between 1 kW and 15 kW.

The controller contains the speed regulator and the complete positional controller with the position regulator for controlling the servo motors. The controller can easily be integrated in existing control systems. Digital inputs and outputs with a 24-V DC PLC level and various field bus options are available. For configuration and optimisation as well as for diagnosis, the controllers can be connected via an RS232 interface to a notebook computer or PC. One unit can be used to control one motor on an actuator, while connection to several axes is also possible.

The controller has a convincing combination of powerful control technology, compact design and excellent price/performance ratio. Due to the digital control technology, the controller STUNG-CPX3 is highly robust in response to load changes in the drive system. The controller has very good damping and therefore fulfils the conditions for a stable control loop and precise positioning of the servo drive. The comprehensively optimised electronic controller is effective in preventing oscillations in the control loop and facilitates a high band width and thus a rigid drive system. Modern software algorithms give increased accuracy in the detection of encoder signals. The rapid control system gives very high clock speeds without process-critical overshoot behaviour.

STUNG-CPX3 ensures compliance with the standards UL, cUL and CE. Furthermore, it supports the function “Safe Torque Off” in accordance with EN ISO 13849:2008, Category 3 PL d/e.

For communication with other controllers, several interfaces such as Profibus, CAN-Bus, Ethercat, Profinet, Powerlink and RS485 are available.

Parametrising and commissioning is carried out by means of user-friendly PC tools with an intuitive user interface and wizard-based technology.

A user-friendly load identification function assists the commissioning operator in determining the actual mass moment of inertia.

Depending on parametrising, motors can be used in the form of resolver technology or with an absolute encoder as positional feedback.

Designs

The controller STUNG-CPX3 is available in the following designs, see table.

Available designs

Series	Design
STUNG-CPX3S..-I-O	Controller for positioning by means of inputs and outputs
STUNG-CPX3S..-RS-I-O	Controller for positioning by means of inputs and outputs and RS232 or RS485 interface
STUNG-CPX3S..-PRO	Controller for positioning by means of Profibus interface
STUNG-CPX3S..-CAN	Controller for positioning by means of CANopen interface
STUNG-CPX3S..-10V	Speed regulator with interface ±10 V

Control

The controller is available in several power stages with five options for positioning control:

- digital inputs and outputs
  (15 or 31 positions controllable in one position table, depending on motor type)
- digital inputs and outputs + RS232, RS485
  (31 positions controllable in one record table)
- Profilbus DP
- CANopen
- ±10 V as speed specification for a positioning subassembly in a PLC.

Control is generally carried out by a higher level PLC that takes over control of the entire machine installation.

Control by means of digital inputs STUNG-CPX3S..-I-O

In one position table, up to 31 position records (15 in operation with machine zero) can be permanently set using the software tool C3 Manager.

The velocity, acceleration time and braking time can be stored for each position. Record selection is carried out by binary addressing via 4 or 5 outputs in a PLC.

The PLC sends a start signal to CPX3 and the selected record is executed.

The feedback “Position reached” is sent via an output on CPX3 and the controller is ready to start a new positioning step.

Movement by hand is only possible in commissioning mode by means of the PC.

Control by means of digital inputs and RS232, RS485 interface STUNG-CPX3S..-RS-I-O

In one position table, to 31 position records can be permanently set using the software tool C3 Manager.

The velocity, acceleration time and braking time can be stored for each position. Record selection is carried out by binary addressing via 5 outputs in a PLC.

The PLC sends a start signal to CPX3 and the selected record is executed.

The feedback “Position reached” is sent via an output on CPX3 and the controller is ready to start a new positioning step.

12 additional inputs and outputs are available.
As a result, 3 programmable status bits can be used for the targeted feedback of up to 8 traversed positions. Initiators can also be connected in order to restrict the travel distance and act as a reference point switch. The option of travel by hand is permanently available as well as connection of a mark sensor for the function “Mark-related positioning”.

The function “Electronic gearbox” is also available.

Motion control can be carried out, depending on the parametrising, via the input and output level of the 24-V PLC level or via the RS232 or RS485 interface using a control and status term.

Control by means of bus system Profibus or CANopen STUNG-CPX3S..-PRO, STUNG-CPX3S..-CAN

In this case too, the position table can be described using the C3 Manager. Selection of positions and execution of positioning is carried out via the relevant bus system and feedback is provided via a data bus. Furthermore, the table can also be described via the bus system, which means that more positions as well as different accelerations and velocities can be selected.
All important parameters can be read out and made available to the higher level controller. The data flow is thus secured and all information is always available to the user.

Motion control is by means of control and status terms.

Initiators can also be connected for end point restriction and as a reference point switch. Connection of a mark sensor for the function “Mark-related positioning” is available, as well as the function “Electronic gearbox”.

Control by means of ±10-Volt speed specification STUNG-CPX3S..-10V

The controller acts as a speed regulator that is controlled via ±10 Volt of a positioning subassembly at a PLC level.
For positional control, the signals from encoder simulation are fed back to the positioning subassembly for processing.

Digital servo controller

Standalone system

Autonomous operation is possible.

In this case, the controller can be ordered with a corresponding option. The PLC user can develop a specific motion profile by means of the programming system Codesys in programming according to IEC 61131-3. The programmer requires knowledge of programming irrespective of manufacturer in accordance with IEC 61131-3.

The standalone system is supplied by agreement.

Parametrising and commissioning

Parametrising and commissioning is carried out by means of user-friendly PC tools and an intuitive user interface with wizard-based technology.

The servo positional controller is matched to the corresponding linear actuator by automatic querying of all necessary inputs and a graphics-supported selection system. A user-friendly load identification function assists the commissioning operator in determining the actual mass moment of inertia. Predefined motion profiles can be executed and stored.

Signals can be monitored directly on the PC by means of an integrated 4 channel oscilloscope.

Various modes (single, normal, auto and roll) as well a zoom function and facility for exporting data to the Office environment, in graphic and tabular form, supplement the system to give a highly user-friendly aid.

Customer service

All controllers for linear actuators and linear tables can be partially configured and commissioned in advance upon customer request. In almost all cases, further commissioning work on site is no longer required.

The linear actuator or linear table is then supplied with a fully mounted motor or motor/gearbox unit. Initiators and switching tags are mounted accordingly. Delivery on this complete basis gives the customer savings in terms of valuable mounting time and the possibility of fulfilling the motion task without delay.

Technical data

For technical data, see the tables.

Data for digital servo controller

Feature	Technical data
Functional scope	▪ Digital positional controller ▪ Positioning according to motion profiles ▪ Absolute, relative positional data ▪ IGBT output stage with short-circuit and short-to-earth protection
Suitable motors	**With resolver** ▪ MOT-SMH60, MOT-SMHA60-BR ▪ MOT-SMH82, MOT-SMHA82-BR ▪ MOT-SMH100, MOT-SMHA100-BR ▪ MOT-MH105-08, MOT-MH105-08-BR ▪ MOT-MH145-08, MOT-MH145-08-BR ▪ MOT-MH145-45-08, MOT-MHA145-45-08-BR ▪ MOT-MH145-15, MOT-MH145-15-BR **With absolute encoder** ▪ MOT-SMH82-SINCOS, MOT-SMHA82-BR-SINCOS ▪ MOT-SMH100-SINCOS, MOT-SMHA100-BR-SINCOS ▪ MOT-MH105-08-SINCOS, MOT-MHA105-08-BR-SINCOS ▪ MOT-MH145-08-SINCOS, MOT-MHA145-08-BR-SINCOS ▪ MOT-MH145-45-08-SINCOS, MOT-MHA145-45-08-BR-SINCOS ▪ MOT-MH145-15-SINCOS, MOT-MHA145-15-BR-SINCOS ▪ MOT-MH145-30-28-SINCOS, MOT-MHA145-30-28-BR-SINCOS ▪ MOT-MH145-30-50-SINCOS, MOT-MHA145-30-50-BR-SINCOS ▪ MOT-MH205-30-28-SINCOS, MOT-MHA205-30-28-BR-SINCOS **With linear encoder, sine/cosine** ▪ MKUVS42A-LM (linear actuator with linear motor drive)
Accuracy	**With resolver** ▪ Positioning on motor shaft ▪ Resolution: 16 bit (= 0,3 angular minutes) ▪ Absolute accuracy: ±15 angular minutes **With absolute encoder** ▪ Positioning on motor shaft ▪ Resolution: 19 bit (= 2,5 angular minutes) ▪ Absolute accuracy: ±18 angular minutes
Supply voltage	▪ 1×230 V AC +10%, 50 Hz – 60 Hz ▪ 3×400 V AC +30%, 50 Hz – 60 Hz
DC operating voltage	▪ 300 V DC with 230-V supply ▪ 560 V DC with 400-V supply
Line-side fuse protection	**Depending on size:** ▪ 10 A, 16 A, 20 A, 25 A/K automatic
Control voltage	24 V DC ±10%, waviness < 0,5 V_{ss} (to be provided by customer)

Technical data
continued

Feature	Technical data
Power requirement, power drain	0,8 A for device Per digital output 100 mA Maximum power drain: 120 W
Setpoint generator	Jerk limited ramps Travel data in mm, inch or incrementally variable by means of scaling factor Specification of velocity, acceleration, deceleration and jerk
Monitoring functions	Power and auxiliary voltage range Motor regulator temperature, locking protection Monitoring of contouring errors
Safety equipment	Release input Standby contact
Inputs and outputs	8 control inputs with 24 V DC, 10 kΩ 4 control outputs with 24 V DC, 100 mA, active HIGH, short-circuit protection 2 analogue inputs 2 analogue outputs
Additional inputs and outputs	**For STUNG-CPX3S..-RS-I-O:** 8 inputs, 4 outputs
RS232, RS485 (switchable)	115 kBaud, rigidly set Word length 8 bit, 1 start bit, 1 stop bit Hardware handshake (RTS, CTS)
Encoder simulation	**Resolution:** 4 – 16 384 increments/motor revolution 5 V TTL level, RS422
Bus connectors (alternatively)	Profilbus DP 3 V PROFIdrive profile for drive technology CANopen according to CiADS402 (master/slave)
Absolute encoder	High resolution encoder as substitute for resolver Absolute encoder over 4 096 revolutions of motor
Connectors	Motor, power, control input and control output by means of plug-in terminals Encoder cables, interfaces by means of plugs
Housing	Enclosed metal housing Insulation according to VDE 0160 Protection class IP 20
EMC emitted interferences	Limit values according to EN 61800-3 Limit value grade C3, C4 without additional mains filter
EMC interference immunity	Limit values for industrial sector according to EN 61800-3
UL conformity certified	In accordance with UL 508C Efile no.: E235 342
Protection class Protection against accidental contact Over voltage category	Protection class 1 according to EN 60664-1 EN 61800-5-1 Voltage category III according to EN 60664-1
Safe Torque Off according to EN ISO 13849:2008, Category 3 PL d/e certified. Test mark IFA 1003004	For implementation of function “Prevention of unexpected startup” according to EN 1037

Output data for voltage rating 1×230 V AC

Device STUNG-CPX3	Current rating A_{eff}	Peak current $A_{eff} < 5$ s	Power kVA	Power drain W
S025	2,5	5	1	30
S063	6,3	12,6	2,5	60

Output data for voltage rating 3×400 V AC

Device STUNG-CPX3	Current rating A_{eff}	Peak current $A_{eff} < 5$ s	Power kVA	Power drain W
S038	3,8	9	2,5	80
S075	7,5	15	5	120
S150	15	30	10	160
S300	30	60	20	350

Standard scope of delivery

The standard scope of delivery comprises, in addition to the controller STUNG-CPX3 and the installation manual, the software C3 Servo Manager and the product handbook on CD.

Dimensions

Data for dimensions and mass, *Figure 1* and table.

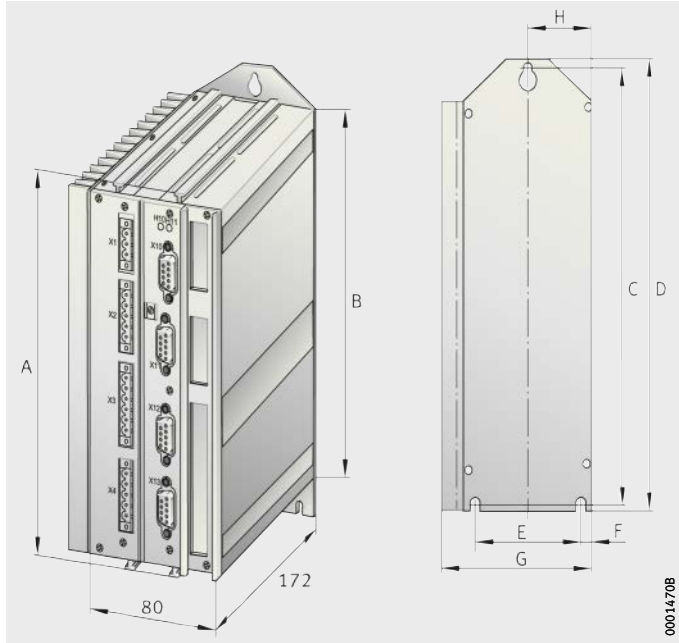

Figure 1
Dimensions

Dimensions and mass

Designation	Mass kg	Dimensions mm							
		A	B	C	D	E	F	G	H
STUNG-CPX3S025	2	199	191	210	222	65	7,5	85	40
STUNG-CPX3S063	2,5	199	191	210	222	65	7,5	100	40
STUNG-CPX3S038	3,5	260	248	267	279	65	7,5	100	40
STUNG-CPX3S075	4,3	260	248	267	279	65	7,5	115	40
STUNG-CPX3S150	6,8	260	248	267	279	80	39	158	39
STUNG-CPX3S300	10,9	391	380	400	412	80	47,5	175	47,5

Connection of supply voltage

Plugs X1 vary in their terminal assignment and design and this is shown in the following figure.

Voltage supply
Operating voltage
Plug X1

Terminal assignment of X1 (operating voltage) for controllers STUNG-CPX3, *Figure 2* and table.

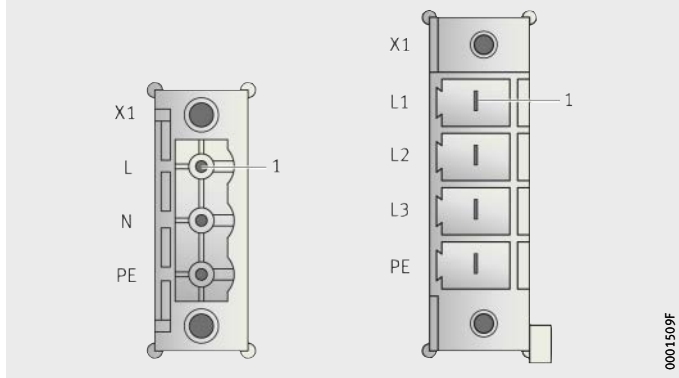

Figure 2
Plug X1

Pin assignment

PIN	Designation			
	STUNG-CPX3S025 STUNG-CPX3S063		STUNG-CPX3S038 STUNG-CPX3S075 STUNG-CPX3S150 STUNG-CPX3S300	
1	L	230 V AC	L1	3*400 V AC
2	N		L2	
3	PE		L3	
4			PE	

Voltage supply
Operating voltage
Plug X4

The terminal assignment of X4 (control voltage) is identical for all devices, *Figure 3* and table.

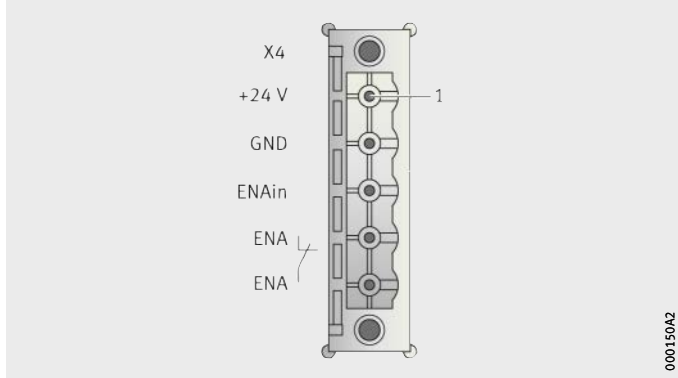

Figure 3
Plug X4

Pin assignment

PIN	Designation	
1	+24 V	21 V DC – 27 V DC
2	GND 24 V	
3	Enable_in	
4	Enable_out_a	
5	Enable_out_b	

Connection of motor

Plugs X3 vary in their design and this is shown in the following figure.

Power connection Plugs X3

Terminal assignment of X3 (power connection) for controllers STUNG-CPX3, *Figure 4* and table.

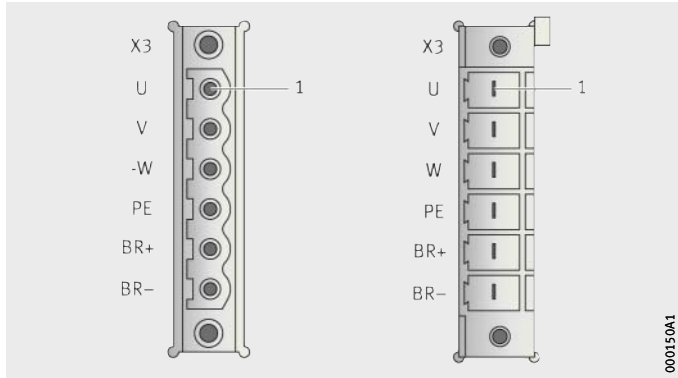

Figure 4
Plug X3

Pin assignment

PIN	Designation	
1	U	Motor
2	V	
3	W	
4	PE	
5	BR +	Motor holding brake
6	BR –	

The brake should only be wired in the case of a motor with a holding brake.

Connection for encoder and feedback of plug X13

The terminal assignment of X13 (feedback signal as a function of the feedback module) is identical for all devices, *Figure 5* and table.

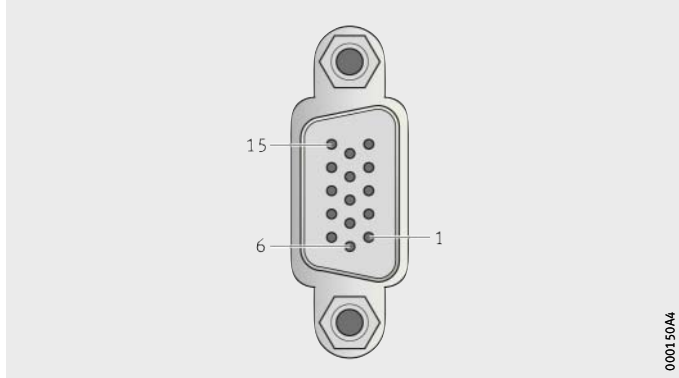

Figure 5
Plug X13

Pin assignment

PIN	Resolver	Absolute encoder	Linear encoder, sine/cosine
1	Reserved	Reserved	Sense –
2	Reserved	Reserved	Sense +
3	GND	GND	Reserved
4	REF – resolver +	Vcc (+8 V)	Vcc (+5 V) · max. 350 mA load
5	+5 V (for temperature sensor)		
6	Reserved	Reserved	CLK_{fbk}
7	Sin –	Sin –	Sin –/A – (encoder)
8	Sin +	Sin +	Sin +/A + (encoder)
9	Reserved	Reserved	CLK_{fbk}
10	T_{mot}	T_{mot}	T_{mot}
11	Cos –	Cos –	Cos –/B – (encoder)
12	Cos +	Cos +	Cos +/B + (encoder)
13	Reserved	$Data_{fbk}$	$Data_{fbk}$
14	Reserved	$Data_{fbk}$	$Data_{fbk}$
15	REF – resolver –	GND (Vcc)	GND (Vcc)

Connection of ballast resistor

Plugs X2 vary in their terminal assignment and design and this is shown in the following figure.

Plug X2

Terminal assignment of X2 (connection of ballast resistor) for controllers STUNG-CPX3, *Figure 6* and table.

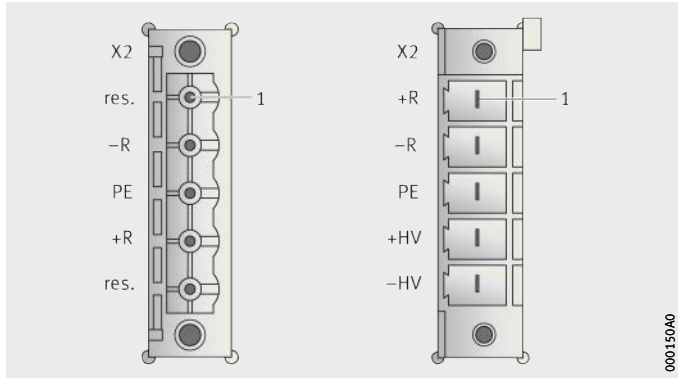

Figure 6
Plug X2

Pin assignment

PIN	Designation	
	STUNG-CPX3S025 STUNG-CPX3S063	STUNG-CPX3S038 STUNG-CPX3S075 STUNG-CPX3S150 STUNG-CPX3S300
1	Reserved	+ ballast resistor[1)]
2	– ballast resistor[1)]	– ballast resistor[1)]
3	PE	PE
4	+ ballast resistor[1)]	+ operating voltage DC
5	Reserved	– operating voltage DC

1) No short-circuit protection.

Connection of digital inputs and outputs

Plugs X12 vary in their terminal assignment and this is shown in the following figure.

Plug X12

Terminal assignment of X12 for controllers STUNG-CPX3S..-I-0, *Figure 7* and table.

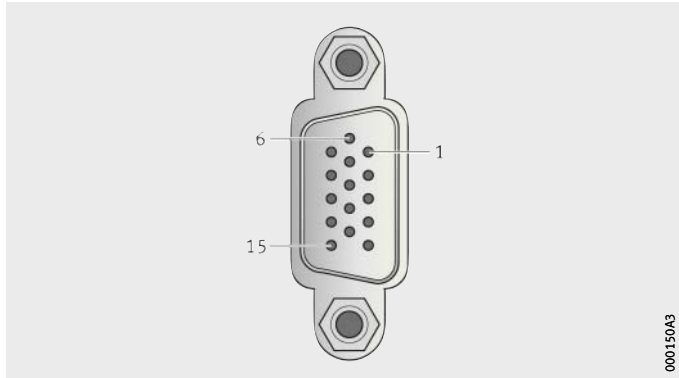

Figure 7
Plug X12

Pin assignment

PIN	Input and output	Designation
1	A	+24-V DC output (max. 400 mA)
2	A0	No error
3	A1	Position reached (max. 100 mA)
4	A2	Output stage current-free (max. 100 mA)
5	A3	Motor energised with nominal value 0 (max. 100 mA)
6	E0	No stop
7	E1	Start (flank)
8	E2 = “1”	Quit (positive flank) The address of the current position record is read in again
	E2 = “0”	Switch motor to current-free with delay
9	E3	Address 0
10	E4	Address 1
11	E	24-V input for digital outputs pin 2 to 5
12	E5	Address 2
13	E6	Address 3
14	E7	MN-Ini[1)]/address 4
15	A	GND 24 V

All inputs and outputs have a 24-V level.

Maximum capacitive loading of outputs: 50 nF.

1) Machine zero initiator only if a corresponding mode has been selected; in this case, 15 motion profiles (address 0 – 3) and machine zero travel are possible.

Plug X12

Plug assignment of X12 for controllers STUNG-CPX3S..-RS-I-0, STUNG-CPX3S..-PRO, STUNG-CPX3S..-CAN, *Figure 8* and table.

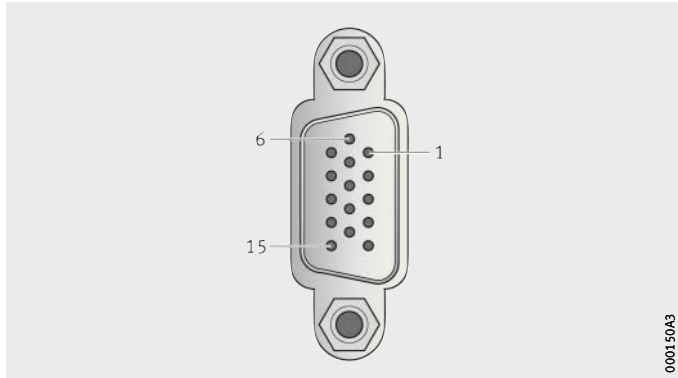

Figure 8
Plug X12

Pin assignment

PIN	Input and output	Designation
1	A	24-V DC output (max. 400 mA)
2	A0	No error
3	A1	Position, velocity, gearbox sychronisation achieved (max. 100 mA)
4	A2	Output stage current-free (max. 100 mA)
5	A3	Motor energised with nominal value 0 (max. 100 mA)
6	E0 = “1”	Quit (positive flank), energise motor The address of the current position record is read in again
	E0 = “0”	Switch motor to current-free with delay
7	E1	No stop
8	E2	Hand +
9	E3	Hand –
10	E4	Mark input
11	E	24-V input for digital outputs pin 2 to 5
12	E5	Limit switch 1
13	E6	Limit switch 2
14	E7	Machine zero initiator
15	A	GND 24 V

All inputs and outputs have a 24-V level.

Maximum capacitive loading of outputs: 50 nF.

Plug X2

Plug assignment of X22 for controllers STUNG-CPX3S075-RS-I-0, *Figure 9* and table.

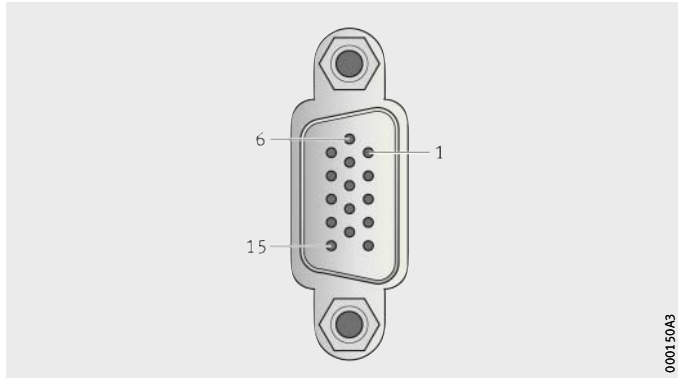

Figure 9
Plug X22

Pin assignment

PIN	Input and output	Designation	
1	n.c.	Reserved	
2	M.E0	Address 0	Free assignment for operation via RS232, RS485
3	M.E1	Address 1	
4	M.E2	Address 2	
5	M.E3	Address 3	
6	M.E4	Address 4	
7	M.E5	Start (flank triggered)	
8	M.E6	No stop (2nd stop input)	
9	M.E7	Open motor holding brake	
10	M.A8	Datum system referenced	
11	E	24-V DC supply	
12	M.A9	Programmable status bit 0 (PSB 0)	Free assignment for operation via RS232, RS485
13	M.A10	Programmable status bit 1 (PSB 1)	
14	M.A11	Programmable status bit 2 (PSB 2)	
15	E	GND 24 V	

All inputs and outputs have a 24-V level.

Maximum capacitive loading of outputs: 50 nF.

Maximum loading of one output: 100 mA.

The 24-V supply (X22.11) must be fed in from outside and fused for delayed action at 1,4 A.

Input wiring of digital inputs

The wiring example is valid for all digital inputs on all controllers, *Figure 10*.

F1 = delayed action fuse

F2 = rapid action electronic fuse; resettable by 24-V DC switch-off and switch-on

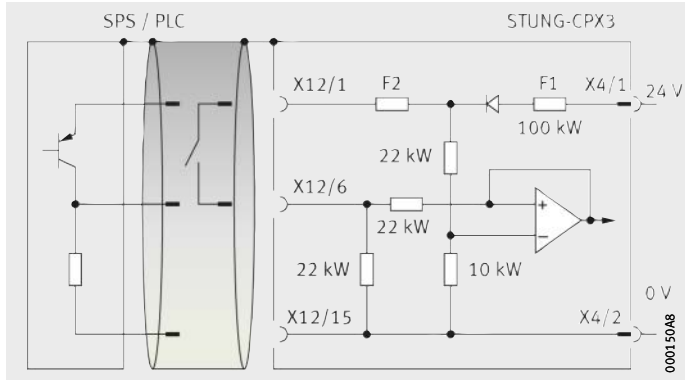

Figure 10
Wiring example for input

Output wiring of digital inputs

The wiring example is valid for all digital outputs on all controllers, *Figure 11*.

The outputs have short-circuit protection; if a short circuit occurs, an error is generated.

F1 = delayed action fuse

F2 = rapid action electronic fuse; resettable by 24-V DC switch-off and switch-on

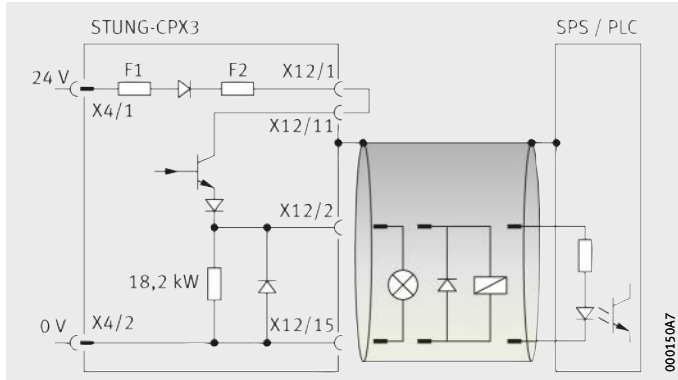

Figure 11
Wiring example for output

Available designs

The controller STUNG-CPX3 is available in the following designs, see table. Further possibilities with field bus connectors are available by agreement.

Controllers

Designation	Current A	Voltage V	Control and comments
STUNG-CPX3S025-I-O	2,5	1×230	Communication via 8I/4O (minimum version) 24-V level
STUNG-CPX3S063-I-O	6,3	1×230	
STUNG-CPX3S025-I-O	7,5	3×400	
STUNG-CPX3S150-I-O	15,0	3×400	
STUNG-CPX3S025-RS-I-O	2,5	1×230	Communication via 16I/8O 24-V level or RS485 interface; gearing, motion by hand possible, mark positioning
STUNG-CPX3S063-RS-I-O	6,3	1×230	
STUNG-CPX3S075-RS-I-O	7,5	3×400	
STUNG-CPX3S075-RS-I-O-ENC	7,5	3×400	
STUNG-CPX3S150-RS-I-O	15,0	3×400	
STUNG-CPX3S025-PRO	2,5	1×230	Communication via Profibus DP PROFIdrive profile for drive technology V3
STUNG-CPX3S063-PRO	6,3	1×230	
STUNG-CPX3S075-PRO	7,5	3×400	
STUNG-CPX3S075-PRO-ENC	7,5	3×400	
STUNG-CPX3S150-PRO	15,0	3×400	
STUNG-CPX3S025-CAN	2,5	1×230	Communication via CANopen CiADS402
STUNG-CPX3S063-CAN	6,3	1×230	
STUNG-CPX3S075-CAN	7,5	3×400	
STUNG-CPX3S075-CAN-ENC	7,5	3×400	
STUNG-CPX3S150-CAN	15,0	3×400	
STUNG-CPX3S025-10V	2,5	1×230	Speed regulator with interface ±10 V
STUNG-CPX3S063-10V	6,3	1×230	
STUNG-CPX3S075-10V	7,5	3×400	
STUNG-CPX3S150-10V	15	3×400	

Accessories for digital servo controllers

Connector set

One connector set is included as standard with each controller. It contains the mating connectors for X1, X2, X3, X4, a ferrite core for the cables for the motor brake and cable ties, *Figure 12*.

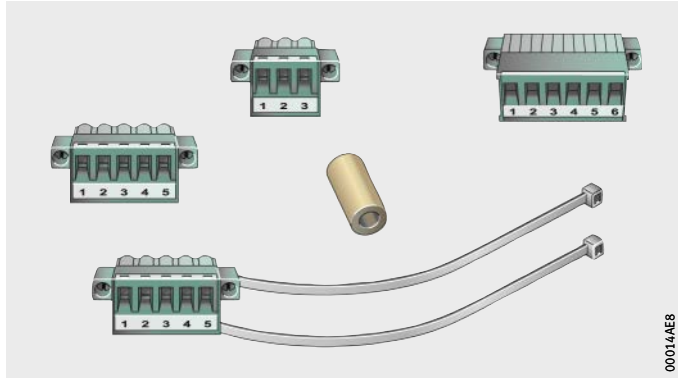

Figure 12
Connector set

Dedicated connection cables and terminal modules

Dedicated cables and terminal modules are available for simple wiring of plugs X11, X12 and X22 to STUNG-CPX3.

Dedicated cables

The simplest variant is cables KAB-SSK21 and KAB-SSK22 with Sub-D connectors on one end and bare cable ends with ferrules on the other end, see table and *Figure 13*.

Figure 13
Cable with one connector

Designation

Designation	Connector	Length m
KAB-SSK21/01-CPX3-X11	X11	1
KAB-SSK21/02-CPX3-X11	X11	2
KAB-SSK22/01-CPX3-X12	X12, X22	1
KAB-SSK22/02-CPX3-X12	X12, X22	2

A further variant is cables KAB-SSK23 and KAB-SSK24 with Sub-D connectors on both ends, see table and *Figure 14*.

Figure 14
Cable with two connectors

Designation

Designation	Connector	Length m
KAB-SSK23/01-CPX3-X11	X11	1
KAB-SSK23/02-CPX3-X11	X11	2
KAB-SSK24/01-CPX3-X12	X12, X22	1
KAB-SSK24/02-CPX3-X12	X12, X22	2

Terminal modules

A user friendly variant is provided by onward connection using terminal modules. These comprise a housing with a terminal strip and a mounted Sub-D connector, with or without LEDs for displaying the status of the inputs and outputs on the STUNG-CPX3. The housings are designed so that they can be mounted on standard mounting bars.

The terminal modules are connected using the cables KAB-SSK23 and KAB-SSK-24. These cables have Sub-D connectors on both ends.

Terminal modules without LEDs for displaying the status of the inputs and outputs on the STUNG-CPX3, see table and *Figure 15*. Terminal modules with LEDs for displaying the status of the inputs and outputs on the STUNG-CPX3, see *Figure 16* and table.

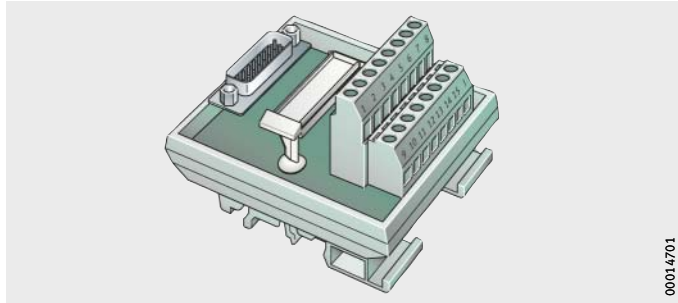

Figure 15
Terminal modules without LEDs

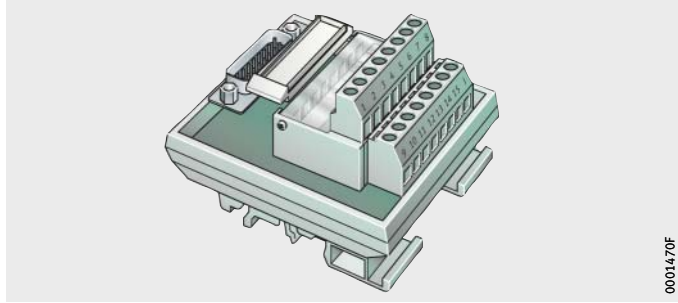

Figure 16
Terminal modules with LEDs

Designation

Designation	Application
KLMD-EAM-06/01-CPX3-X11-X12	Terminal module without LEDs for X11 (with cable SSK23) and X12, X22 (with cable SSK24)
KLMD-EAM-06/02-CPX3-X12	Terminal module with LEDs for X12 (with cable SSK24)

Ballast resistors

If the internal ballast circuit in the digital servo controller is not sufficient to absorb the kinetic energy occurring in extremely dynamic braking operation, an external ballast resistor can be connected, see table Dimensions, page 746 and *Figure 17* to *Figure 20*, page 746.

Technical data for ballast resistors WIDST-BRM and allocation to the relevant controller, see table Allocation of ballast resistor and controller.

WIDST-BRM

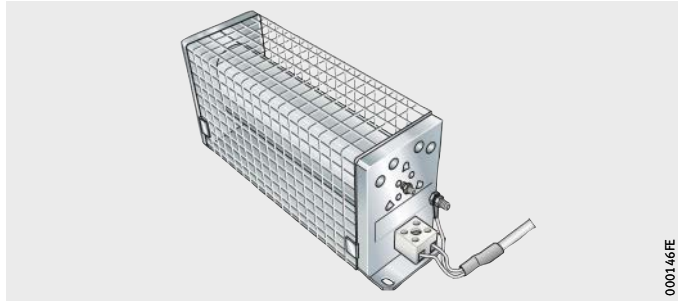

Figure 17
Ballast resistor

WIDST-BRM08-01

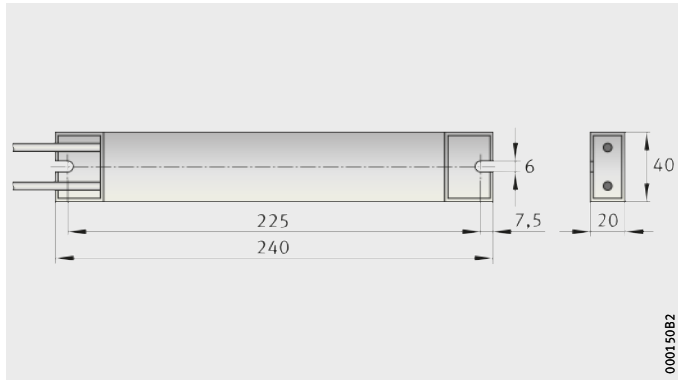

Figure 18
Dimensions

WIDST-BRM05-01

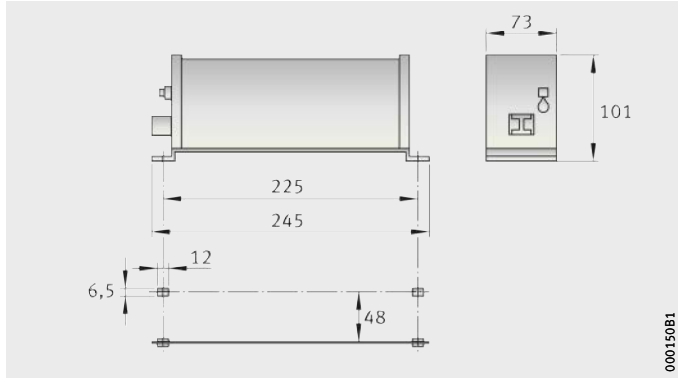

Figure 19
Dimensions

WIDST-BRM10-01
WIDST-BRM04-01
WIDST-BRM04-02

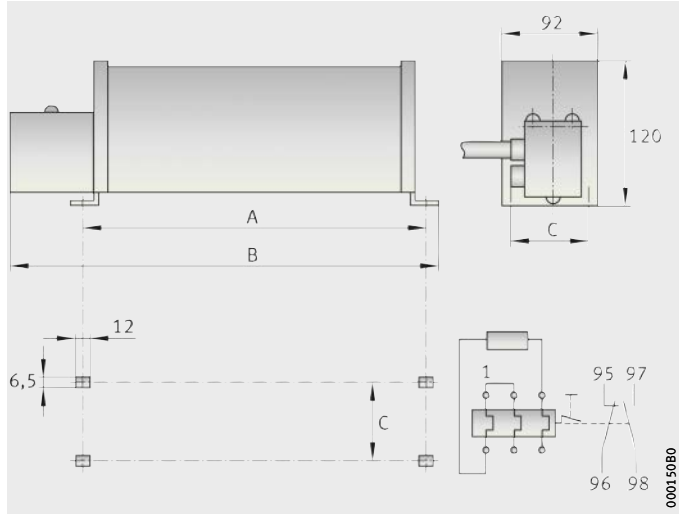

Figure 20
Dimensions

Dimensions

Designation	A mm	B mm	C mm
WIDST-BRM10-01	250	330	64
WIDST-BRM04-01	250	330	64
WIDST-BRM04-02	300	380	64

Allocation of ballast resistor and controller

Designation	Technical data			Controller
	Continuous power W	Peak power W	Resistance Ω	
WIDST-BRM08-01	60	250	100	STUNG-CPX3S025 STUNG-CPX3S038
WIDST-BRM05-01	180	2 300	56	STUNG-CPX3S063 STUNG-CPX3S075
WIDST-BRM10-01	570	6 900	47	STUNG-CPX3S150
WIDST-BRM04-01	570	6 900	15	STUNG-CPX3S300
WIDST-BRM04-02	740	8 900	15	

EMC measures

For the industrial sector (limit values C3 according to EN 61 800-3), operation with larger motor cables without a mains filter is possible.

For the commercial and residential sector (limit values C2 according to EN 61 800-3), the use of a mains filter is necessary. This can be implemented once for the specific machine or for each individual controller, see table and *Figure 21* to *Figure 24*, page 748.

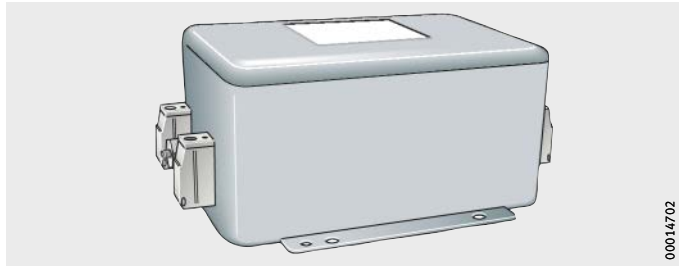

Figure 21
Mains filter

Designation

Designation	Designation	Controller
Filter-CPXS025-S063	Mains filter	STUNG-CPX3S025[1)] STUNG-CPX3S063[1)]
Filter-CPXS038-S075-S150		STUNG-CPX3S038[1)] STUNG-CPX3S075[1)] STUNG-CPX3S150[1)]
Filter-CPXS300		STUNG-CPX3S300

[1)] Only necessary for motor cables >10 m.

Filter-CPXS025 S063

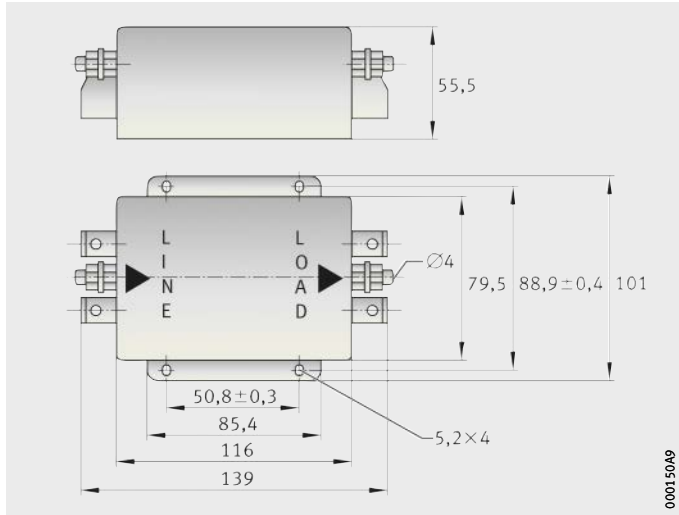

Figure 22
Dimensions

Filter-CPXS038-S075-S150

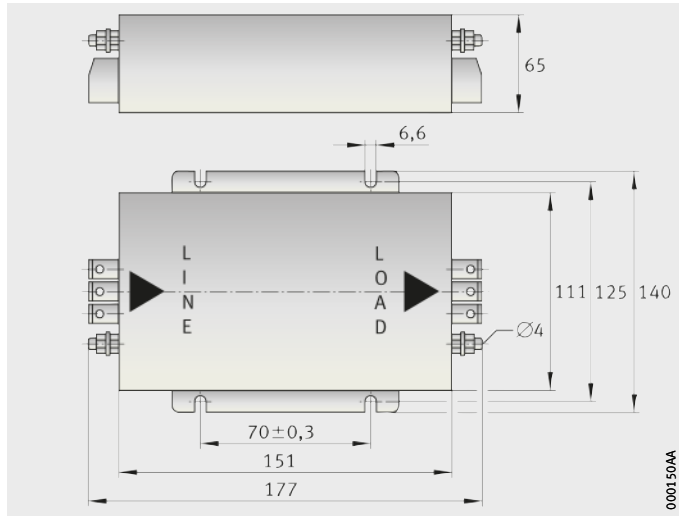

Figure 23
Dimensions

Filter-CPXS300

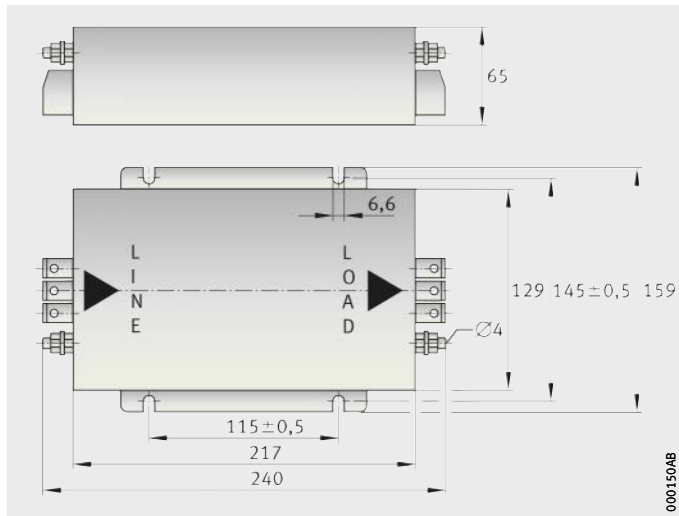

Figure 24
Dimensions

RS232 cable

For parametrising of controllers, a corresponding PC connection cable is available. The cable length is 2,5 m. Connection to the PC is made using an RS232 interface, to the controller using X10, see table, page 749 and *Figure 25*.

Figure 25
RS232 cable

Designation

Designation	Designation
KAB-RS232-2,5M-COMPAX	PC connection cable

Wiring plan

Apply the shield flat on both sides, *Figure 26*.

KAB-RS232-2,5M-COMPAX

① 7 · 0,25 mm + shield

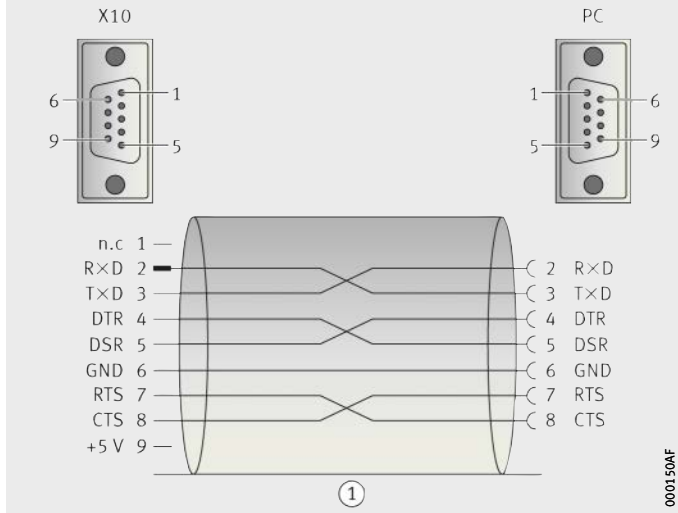

Figure 26
Wiring plan

Assignment plan for X10

The interface can be selected by means of the assignment of X10/1:

- RS232: X10/1 = 0 V
- RS485: X10/1 = 5 V; pin 1 and 9 with external bridging, *Figure 27*.

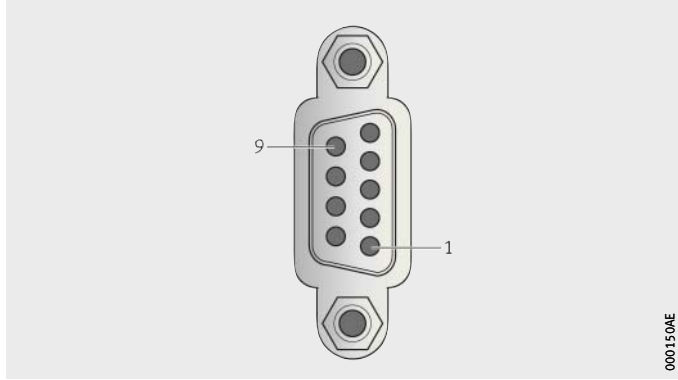

Figure 27
Assignment plan for X10, parametrisable

The terminal assignment varies. It is given in the following tables.

RS232

PIN	Designation
1	(Enable RS232) 0 V
2	RxD
3	TxD
4	DTR
5	GND
6	DSR
7	RTS
8	CTS
9	+5 V

RS485 Four-wire

PIN	Designation
1	(Enable RS232) +5 V
2	RxD
3	TxD
4	res.
5	GND
6	res.
7	TxD
8	RxD
9	+5 V

In order to ensure reliable operation of the various functions of the Servo Manager, a USB RS232 inverter is recommended.

RS485 Two-wire

PIN	Designation
1	(Enable RS485) +5 V
2	Reserved
3	TxD_RxD
4	Reserved
5	GND
6	Reserved
7	TxD_RxD
8	Reserved
9	+5 V

The following inverters have been tested:

- ATEN UC 232A
- USB GMUS-03
  (available under various company designations).

For Windows 7 and later, inverters with an FDTI chipset are necessary, e. g.:

- Digitus DA-70156
- Delock 61364.

Positioning function with STUNG-CPX3S..-RS-I-O

Positioning is carried out using 31 positional records that are defined by means of address, mode (POSA, POSR), target position, velocity, acceleration, deceleration and PSB, *Figure 28*.

Satz	Modus						
0	Homing	Mode=0	V=10.00mm/s	A=100mm/s²			000
1	MoveAbs	P=0.00mm	V=1000.00mm	A=5000mm/s²	D=5000mm/s²	J=1000000mm/s³	001
2	MoveAbs	P=500.00mm	V=750.00mm/	A=5000mm/s²	D=5000mm/s²	J=1000000mm/s³	010
3	MoveAbs	P=1000.00mm	V=750.00mm/	A=5000mm/s²	D=5000mm/s²	J=1000000mm/s³	011
4	MoveAbs	P=2000.00mm	V=1000.00mm	A=5000mm/s²	D=5000mm/s²	J=1000000mm/s³	100
5	MoveAbs	P=3000.00mm	V=1000.00mm	A=5000mm/s²	D=5000mm/s²	J=1000000mm/s³	101
6	MoveAbs	P=5000.00mm	V=2000.00mm	A=10000mm/s	D=10000mm/s	J=1000000mm/s³	110
7	Empty						000
8	Empty						000
9	Empty						000
10	Empty						000

000179D4

Figure 28
Positional records

The required positional record is selected using the inputs ME0 to ME4 and started by means of a START flank.

The positional record address is read in using the START flank.

The precondition for the START flank is a minimum pulse duration of 1 ms. The response time is a maximum of 1,4 ms (0,4 ms to 1,4 ms).

Positioning example with STUNG-CPX3S..-RS-I-O

Type of operation:

- absolute operation and single positioning.

Absolute operation

The travel range is graduated using a fixed dimensional system; there is a defined, fixed zero point. All positions are defined relative to this zero point, *Figure 29*.

00015083

Figure 29
Zero point

Since the position type (relative or absolute) can be additionally selected for each motion record, mixed operation is also possible.

Single positioning

With a START flank (X22.7 = 24 V DC), the positional record addressed via the inputs is always executed. Before each START, the required positional record must therefore be addressed, *Figure 30* and table.

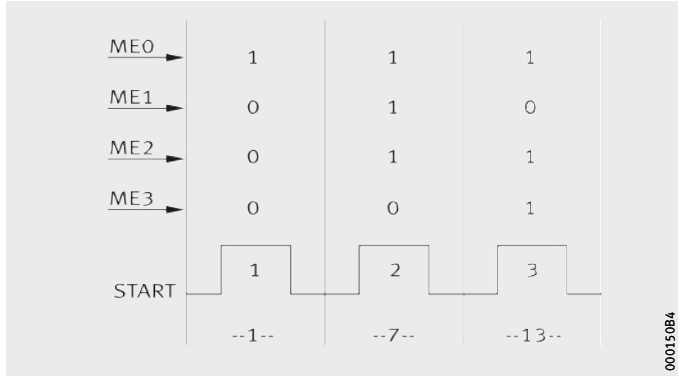

Figure 30
Positional record

Addressing the positional record

Action	Behaviour
START 1	Positional address is read in Positional record 1 is executed
START 2	Positional address is read in Positional record 7 is executed
START 3	Positional address is read in Positional record 13 is executed

A positional record is structured as follows:

- Address:
  address of the positional record. The required positional record is selected by means of the inputs ME0 to ME4. The address is determined from the binary value of the inputs, where
  ME0 = 2^0 = 1
  ME1 = 2^1 = 2
  ME2 = 2^2 = 4
  ME3 = 2^3 = 8
  ME4 = 2^4 = 16.
- Mode:
  POSA: absolute positioning. This is appropriate in continuous operation and in operation without a machine zero.
  POSR: relative positioning. Relative positioning can also be carried out in absolute operation.
- Target position:
  target position in the selected unit of measurement.
- Velocity:
  velocity in the unit of measurement/s.
- Acceleration:
  acceleration in the unit of measurement/s^2.
- Deceleration:
  deceleration in the unit of measurement/s^2.
- STATUS:
  3 programmable status bits.

Available designs

The accessories for the controller STUNG-CPX3 are available in the following designs, see table.

Accessories

Designation	Application
WIDST-BRM08-01	STUNG-CPX3S025
WIDST-BRM05-01	STUNG-CPX3S063, STUNG-CPX3S075
WIDST-BRM10-01	STUNG-CPXS150
WIDST-BRM04-01	STUNG-CPXS300
WIDST-BRM04-02	
KAB-SSK21/01-CPX3-X11	Connection cable for X11
KAB-SSK21/02-CPX3-X11	
KAB-SSK22/01-CPX3-X12	Connection cable for X12
KAB-SSK22/02-CPX3-X12	
KAB-SSK23/01-CPX3-X11	Connection cable for X11 and terminal module
KAB-SSK23/02-CPX3-X11	
KAB-SSK24/01-CPX3-X12	Connection cable for X12 and terminal module
KAB-SSK24/02-CPX3-X12	
KLMD-EAM-06/01-CPX3-X11-X12	Terminal module for X11 and X12
KLMD-EAM-06/02-CPX3-X12	Terminal module for X12 with LEDs
KAB-RS-232-2,5M-COMPAX	RS232 interface cable
KAB-SSK29/20-CPX3-X11	Encoder interface cable
FILTER-CPX3S025-S063	Mains filter, STUNG-CPX3S025, STUNG-CPX3S063
FILTER-CPX3S038-S075-S150	Mains filter, STUNG-CPX3S075, STUNG-CPX3S150
FILTER-CPX3S300	Mains filter, STUNG-CPX3S300

Ordering example, ordering designation Digital servo controller

	Controller	STUNG
	2,5 A current rating, 230 V AC	CPX3S025
	Control by means of inputs and outputs	I-O
	Control by means of RS232, RS485	RS
Ordering designation	1×**STUNG-CPX3S025-RS-I-O**, *Figure 31*	

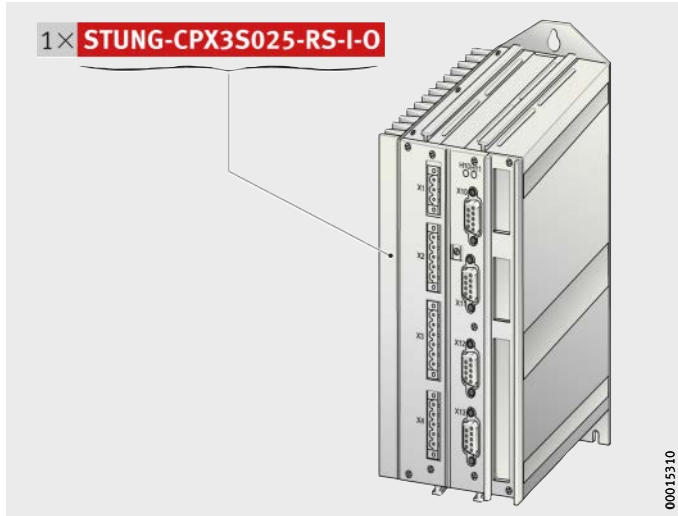

Figure 31
Ordering designation

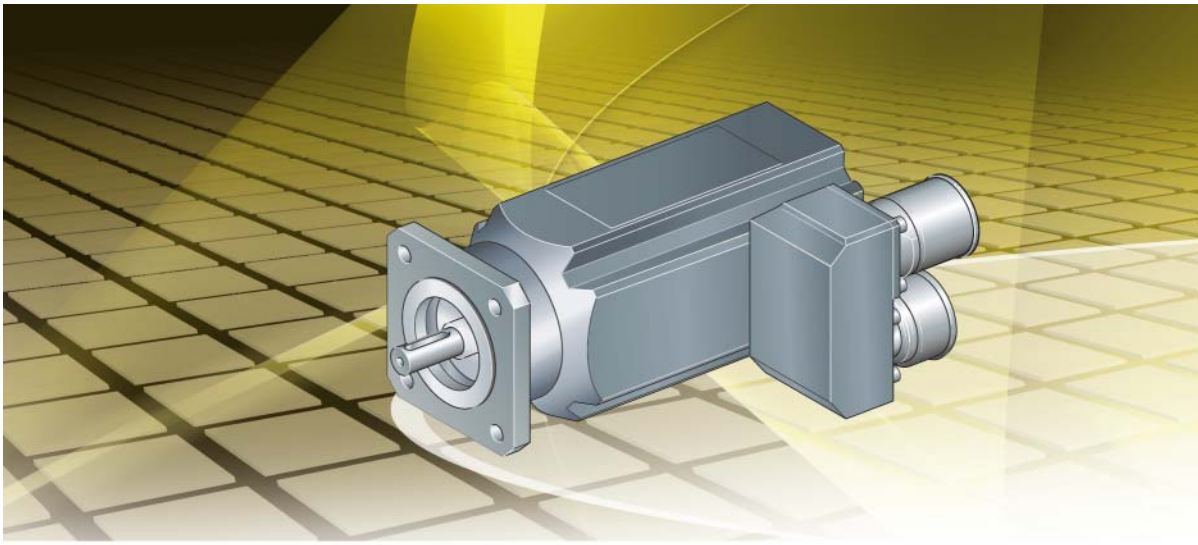

Motors and gearboxes

Brushless servo motors
Planetary gearboxes
Motor/gearbox unit

Motors and gearboxes

Synchronous servo motors

MOT-SMH, MOT-MH

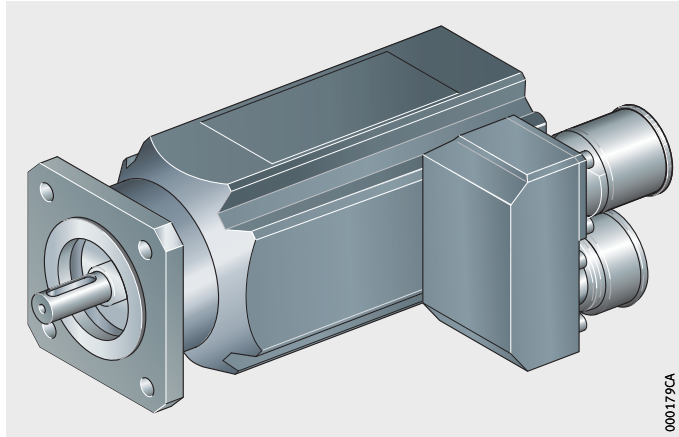

Brushless servo motors

Features

Due to their many advantages, brushless servo motors have largely replaced DC drives.

When synchronous servo motors MOT-SMH and MOT-MH with sine wave magnetisation and an integral resolver are used with compact digital servo control systems STUNG-COMPAX and STUNG-CPX3, they can fulfil the highest requirements demanded of a servo system. High power density in a compact design is achieved by the use of neodymium magnets. Due to the sine wave magnetisation and resolver feedback, the drive system has absolutely uniform torque behaviour even at low speeds.

The motors can also be equipped with absolute encoders.
As a result, there is no need for a reference point traverse after an emergency stop or other malfunction within the complete installation in which the actuator is integrated. This increases the safety level of the system, since the position of the carriage plate is always known, and reduces the time taken in restarting operation. A drive fitted with SINCOS is longer, but the customer can then dispense with additional initiators on the axis. This reduces the work required in wiring.

Schaeffler recommends the use of absolute encoders.
The motors can all be fitted with a holding brake.
The brake is normally controlled by the regulator.
No additional motor cables are required; the motor cables have sufficient connections to control the brake too, *Figure 1*.

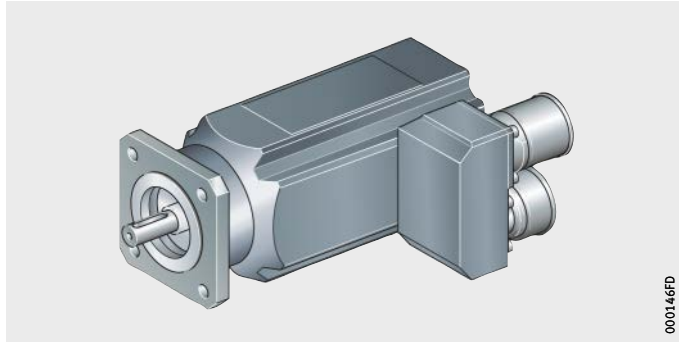

Figure 1
Motors SMH and MH

Brushless servo motors

General key data are as follows:

- IP 65 design as standard
- runout tolerance R in accordance with DIN 42 955
- any mounting position
- 8 pin design
- three times torque level available for up to 3 s
- power range from 1,4 Nm to 50 Nm (at 65 K overtemperature)
- low mass inertia for dynamic applications
- shaft seal made from nitrile rubber
- insulation class F, motor temperature monitoring by means of integrated PTC (KTY84-130)
- standard flanges: standard in accordance with DIN 42 955; IEC 72
- main body: extruded aluminium part, flange: aluminium
- matt black paint coating RAL9005
- integrated resolver
- absolute encoder (optional)
- holding brake (optional).

Technical data

Technical data on the brushless servo motors MOT-SM and MOT-MH are given in the following tables.

MOT-SMH, MOT-SMHA

Designation	Servo controller required	Standstill torque M_0 Nm
MOT-SMH60	STUNG-CPX3S025	1,4
MOT-SMH60-C7-SINCOS[1)]		
MOT-SMHA60-BR		
MOT-SMHA60-BR-C7-SINCOS[1)]		
MOT-SMH82		3
MOT-SMH82-SINCOS		
MOT-SMHA82-BR		
MOT-SMHA82-BR-SINCOS		
MOT-SMH100	STUNG-CPX3S063	6
MOT-SMH100-SINCOS		
MOT-SMHA100-BR		
MOT-SMHA100-BR-SINCOS		
MOT-SMH10075	STUNG-CPX3S075	6
MOT-SMH10075-SINCOS		
MOT-SMH10075-BR		
MOT-SMH10075-BR-SINCOS		

MOT-SMH, MOT-SMHA
continued

Designation	Rated data			Moment of inertia	Mass
	Torque	Speed	Current		
	M_N	n_N	I_N	J	m
	Nm	min^{-1}	A	$kg \cdot cm^2$	≈kg
MOT-SMH60	1,2	3 300	1,5	0,302	1,5
MOT-SMH60-C7-SINCOS[1)]					
MOT-SMHA60-BR				0,428	1,8
MOT-SMHA60-BR-C7-SINCOS[1)]					
MOT-SMH82	2,4	3 300	2,8	1,4	3,5
MOT-SMH82-SINCOS					
MOT-SMHA82-BR				1,83	4,2
MOT-SMHA82-BR-SINCOS					
MOT-SMH100	4,7	3 000	4,6	3,36	4,7
MOT-SMH100-SINCOS					
MOT-SMHA100-BR				4,4	5,3
MOT-SMHA100-BR-SINCOS					
MOT-SMH10075	4,8	4 500	7,5	3,36	4,7
MOT-SMH10075-SINCOS					
MOT-SMH10075-BR				4,4	5,3
MOT-SMH10075-BR-SINCOS					

1) SMH(A)60(-BR) only available with SINCOS in certain cases.
Please consult the Schaeffler engineering service.

MOT-MH, MOT-MHA

Designation	Servo controller required	Standstill torque M_0 Nm
MOT-MH105-08	STUNG-CPX3S075	8
MOT-MH105-08-SINCOS		
MOT-MHA105-08-BR		
MOT-MHA105-08-BR-SINCOS		
MOT-MH145-08	STUNG-CPX3S075	8,7
MOT-MH145-08-SINCOS		
MOT-MHA145-08-BR		
MOT-MHA145-08-BR-SINCOS		
MOT-MH145-45-08	STUNG-CPX3S075	8,7
MOT-MH145-45-08-SINCOS		
MOT-MHA145-45-08-BR		
MOT-MHA145-45-08-BR-SINCOS		
MOT-MH145-15	STUNG-CPX3S150	15
MOT-MH145-15-SINCOS		
MOT-MHA145-15-BR		
MOT-MHA145-15-BR-SINCOS		
MOT-MH145-30-28	STUNG-CPX3S150	28
MOT-MH145-30-28-SINCOS		
MOT-MHA145-30-28-BR		
MOT-MHA145-30-28-BR-SINCOS		
MOT-MH205-30-28	STUNG-CPX3S300	28
MOT-MH205-30-28-SINCOS		
MOT-MHA205-30-28-BR		
MOT-MHA205-30-28-BR-SINCOS		
MOT-MH205-30-50	STUNG-CPX3S300	50
MOT-MH205-30-50-SINCOS		
MOT-MHA205-30-50-BR		
MOT-MHA205-30-50-BR-SINCOS		

MOT-MH, MOT-MHA continued

Designation	Rated data			Moment of inertia	Mass
	Torque M_N Nm	Speed n_N min^{-1}	Current I_N A	J $kg \cdot cm^2$	m ≈kg
MOT-MH105-08	7	3 000	4,4	6,2	11,2
MOT-MH105-08-SINCOS					
MOT-MHA105-08-BR				6,83	14
MOT-MHA105-08-BR-SINCOS					
MOT-MH145-08	7,9	3 000	4,9	10,5	12
MOT-MH145-08-SINCOS					
MOT-MHA145-08-BR				12,45	17
MOT-MHA145-08-BR-SINCOS					
MOT-MH145-45-08	7,18	4 500	6,6	10,5	12
MOT-MH145-45-08-SINCOS					
MOT-MHA145-45-08-BR				12,45	17
MOT-MHA145-45-08-BR-SINCOS					
MOT-MH145-15	10,5	4 500	9,7	16	14
MOT-MH145-15-SINCOS					
MOT-MHA145-15-BR				17,95	19
MOT-MHA145-15-BR-SINCOS					
MOT-MH145-30-28	21,25	3 000	12,54	27	28
MOT-MH145-30-28-SINCOS					
MOT-MHA145-30-28-BR				28,95	32
MOT-MHA145-30-28-BR-SINCOS					
MOT-MH205-30-28	25,65	3 000	17,96	50	29,2
MOT-MH205-30-28-SINCOS					
MOT-MHA205-30-28-BR				60	43,2
MOT-MHA205-30-28-BR-SINCOS					
MOT-MH205-30-50	41,65	3 000	26,77	80	44
MOT-MH205-30-50-SINCOS					
MOT-MHA205-30-50-BR				90	58
MOT-MHA205-30-50-BR-SINCOS					

Accessories

Motors can be installed rapidly and securely with the aid of appropriate accessories.

The following accessories are available for brushless servo motors:

- dedicated cables in graduated lengths for all motors
- motor chokes for long motor cables.

Cable fittings for SMH servo motors

For connecting the servo motors to Compax controllers, dedicated cables of various lengths are available, see table, *Figure 2*, (5 m, 7,5 m, 10 m, 15 m, 20 m, 25 m, 30 m and others).
The cables are shielded in order to prevent transmission of interference. They have a robust plug for connection to the motor and are customised with ferrules on the controller end.
The resolvers or SINCOS encoder cables have non-interchangeable plugs on the motor side and controller side.

Dedicated cables

Cable type	Designation	Cable diameter ∅ mm	Minimum bending radius r_B mm
Standard cables	KAB-MOK55	10,6	45
	KAB-MOK59	13,3	133
	KAB-MOK42	8	120
Flexible trunking cables	KAB-MOK54	11,5	87
	KAB-MOK63		
	KAB-MOK64	13,6	102
	KAB-GBK24	8,5	128
	KAB-REK41	7,4	74

The cable for connecting a motor with absolute encoder SINCOS, KAB-GK24, is always suitable for use in flexible trunking, *Figure 2*.

The cables KAB-MOK59, KAB-MOK63 and KAB-MOK64 are customised with ferrules at both ends. The cable lengths are defined by means of variants: variant 0050 corresponds to a length of 5 m, while variant 0200 corresponds to a length of 20 m. The other lengths are marked accordingly.

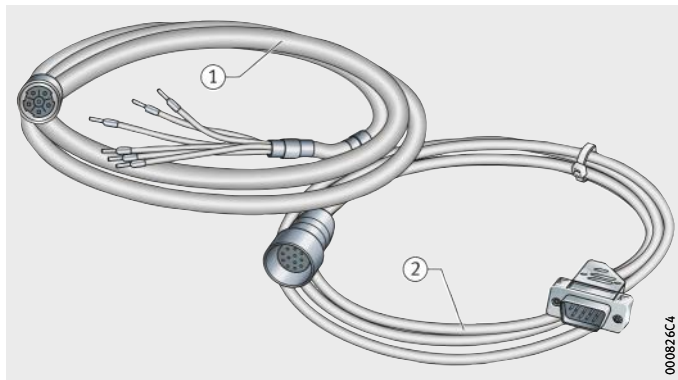

① KAB-MOK
② KAB-REK, KAB-GBK

Figure 2
Standard and flexible trunking cables

Allocation of motor and encoder cables to COMPAX and CPX3 controllers

Motor cable	Suitable for	
	Servo motor MOT	Servo controller STUNG
KAB-MOK55 KAB-MOK54	SMH4060-035 SMH60, SMHA60-BR SMH82, SMHA82-BR SMH100, SMHA100-BR MH105, MHA105-BR	CPX3S
KAB-MOK59 KAB-MOK63 KAB-MOK64	MH145, MHA145-BR	CPX3S
KAB-REK42 KAB-REK41	SMH60, SMHA60-BR SMH82, SMHA82-BR SMH100, SMHA100-BR SMH105, SMHA105-BR SMH145, SMHA145-BR	CPX3S
KAB-GBK24	SMH4060-035-SINCOS SMH60-SINCOS, SMHA60-BR-SINCOS SMH82-SINCOS, SMHA82-BR-SINCOS SMH100-SINCOS, SMHA100-BR-SINCOS MH105-SINCOS, MHA105-BR-SINCOS MH145-SINCOS, MHA145-BR-SINCOS	CPX3S..-SINCOS

Motor chokes for long motor cables

In order to prevent interference in long motor cables (L > 20 m), the use of a motor output choke is recommended, *Figure 3*.

Designation and dimensions of motor chokes DROSSEL-6A and DROSSEL-16A, table and *Figure 4*, page 766 as well as *Figure 5*, page 766.

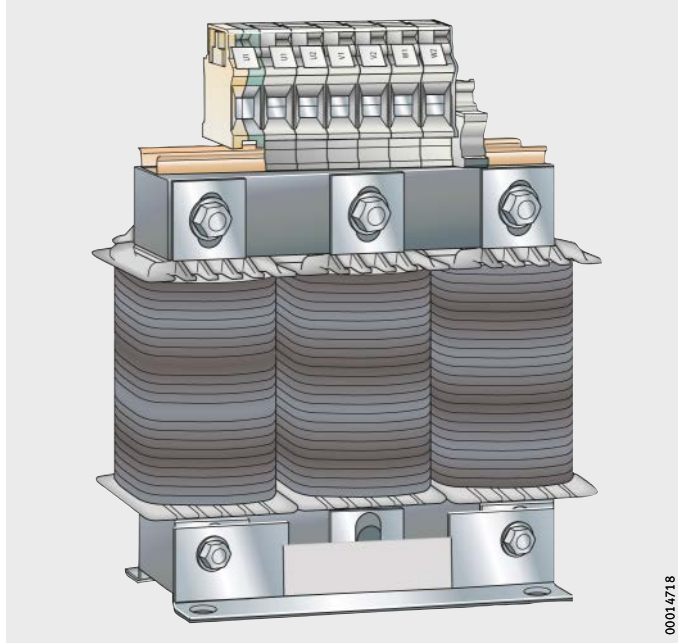

Figure 3
DROSSEL-16A

Designation

Designation	Description
DROSSEL-6A	Motor choke for motor current rating up to 6,3 A
DROSSEL-16A	Motor choke for motor current rating up to 16 A

DROSSEL-6A

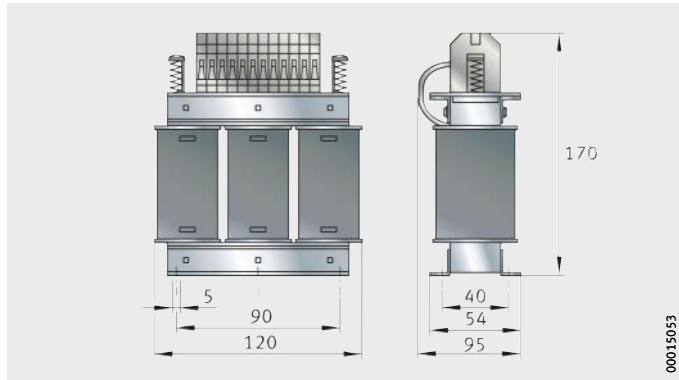

Figure 4
Dimensions

DROSSEL-16A

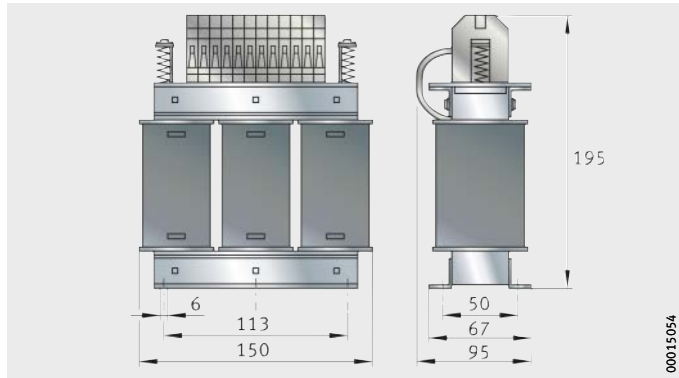

Figure 5
Dimensions

Terminal assignment

The following diagram shows the wiring configuration of the motor output choke, *Figure 6*.

① STUNG-CPX3
② Motor choke
③ Motor

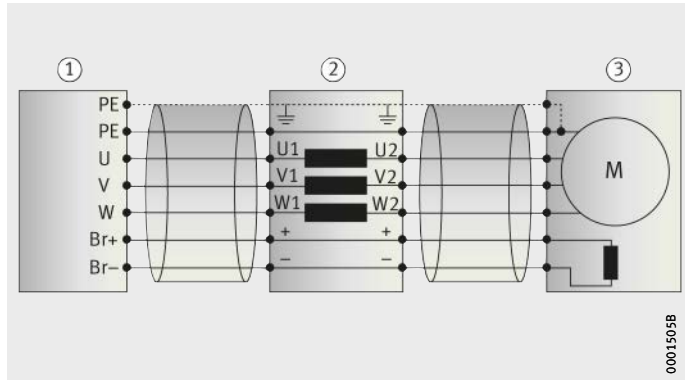

Figure 6
Assignment scheme

Ordering example, ordering designation

Brushless servo motor

	Brushless servo motor	MOT
	Flange size 82 mm	SMHA82
	With holding brake	BR
Ordering designation	1×**MOT-SMHA82-BR**, *Figure 7*	

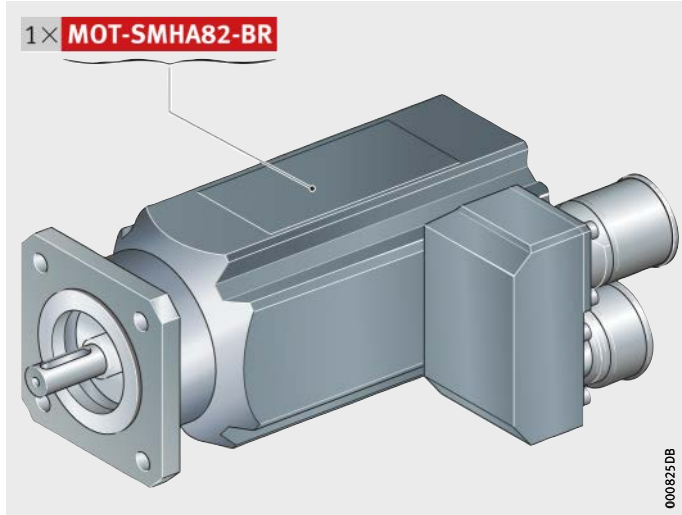

Figure 7
Ordering designation

Motor connection cable

	Cable	KAB
	Motor connection cable type 55	MOK55
	Variant 0050, length 5 m	Var0050
Ordering designation	1×**KAB-MOK55 Var0050**, *Figure 8*	

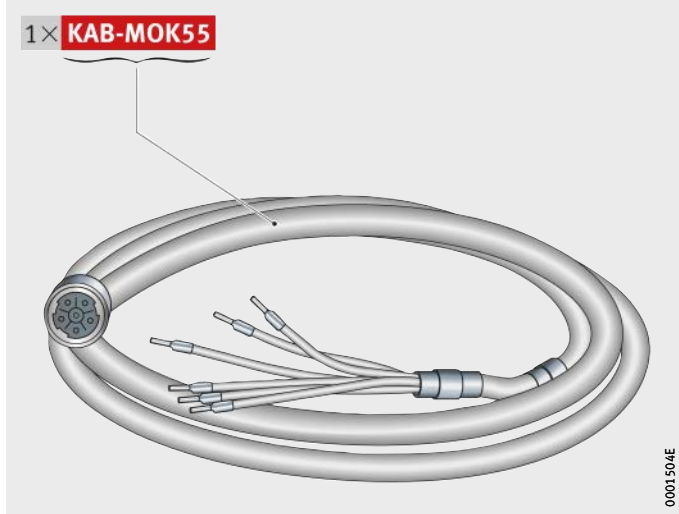

Figure 8
Ordering designation

Motor choke

	Motor choke	Choke
	Motor current rating up to 6,3 A	6A
Ordering designation	1×**Drossel-6A**, *Figure 9*	

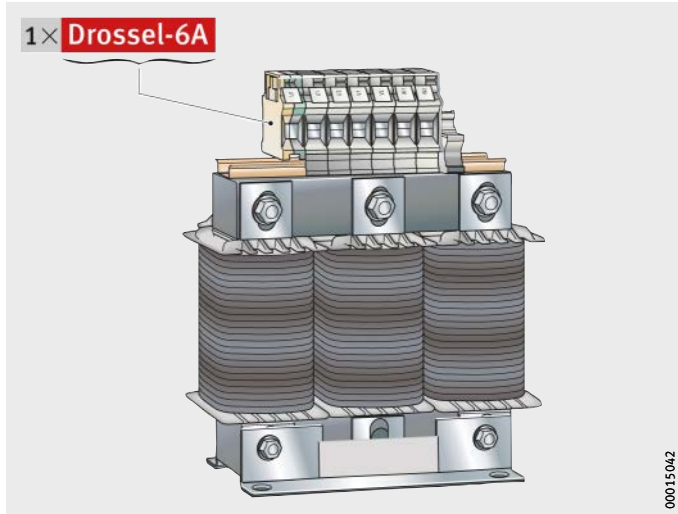

Figure 9
Ordering designation

Planetary gearbox
Honed tooth flanks

PLN

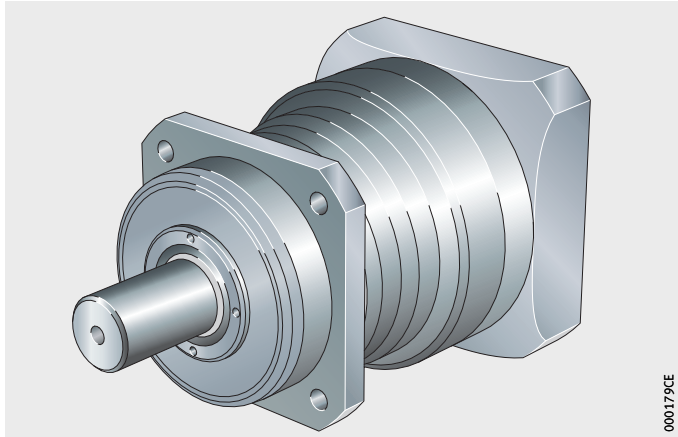

Planetary gearbox
Ground tooth flanks

PLE

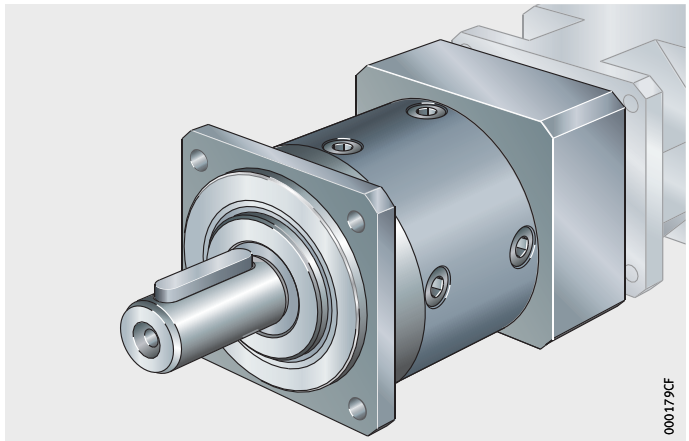

Angled gearbox

WPLN

Planetary and angled gearboxes

Features

Servo motors with increasing dynamic characteristics and performance levels are available as high accuracy drive units for linear actuators. These servo motors are characterised by low mass moments of rotor inertia and high speeds. As a result, it is important to provide gearboxes with a reduction ratio as low in backlash as possible in order to increase the gearbox output torques and reduce the external mass moments of inertia.

Series PLN, PLE

In gearboxes of series PLN, the torque to be transmitted is branched into three power components, allowing a significantly smaller gearbox size than gearboxes of the same power level in which the torque is transmitted via only one tooth mesh.

Gearboxes of series PLN are also characterised by high dynamic characteristics, low torsional backlash, high torsional rigidity and low mass.

Gearboxes PLN are sealed such that they can be operated in any mounting position.

They are fitted to the motors using clamping elements.

Gearboxes with a reduction ratio of 4, 8 or 16 are preferred types and are available within a very short time.

Gearboxes of series PLE have the same performance characteristics as those of series PLN. Series PLE has essentially the same dimensions as series PLN. In contrast to the low-backlash planetary gearboxes of series PLN with honed tooth flanks, however, the tooth flanks of series PLE are ground, offering a more economical alternative.

Technical data

Technical data on masses and torsional backlash, output torques and mass moments of inertia are given in the following tables, page 772.

Series WPLN

Angled gearboxes of series WPLN with hypoid gearing and axis offset are highly compact and also offer reduced running noise.

They are suitable for any mounting position and are lubricated for life.

Technical data

Technical data on masses and torsional backlash, output torques and mass moments of inertia are given in the following tables, page 772.

Masses and torsional backlash

Designation	Mass kg		Torsional backlash Angular minutes	
	Single stage	Twin stage	Single stage	Twin stage
GETR-PLN70	1,9[1)]	2,4[2)]	< 3[1)]	< 5[2)]
GETR-PLN90	3,3[1)]	4,2[2)]	< 3[1)]	< 5[2)]
GETR-PLN115	6,9[1)]	9,5[2)]	< 3[1)]	< 5[2)]
GETR-PLN142	16[1)]	20,5[2)]	< 3[1)]	< 5[2)]
GETR-PLE80/90	3,2[1)]	3,7[2)]	< 7[1)]	< 9[2)]
GETR-PLE120/115	6,6[1)]	8,6[2)]	< 7[1)]	< 9[2)]
GETR-WPLN70	3	3,9	< 5	< 7
GETR-WPLN90	5	5,3	< 5	< 7
GETR-WPLN115	10,5	9,2	< 5	< 7

1) Single stage: reduction ratio i = 3, 4, 5, 8, 10.
2) Twin stage: reduction ratio i = 16, 20, 25, 40.

Output torques

Designation	Output torque (fatigue strength) T_2 Nm Reduction ratio i								
	3	4	5	8	10	16	20	25	40
GETR-PLN70	45	60	65	40	27	77	123	104	104
GETR-PLN90	100	140	140	80	60	150	150	140	140
GETR-PLN115	230	300	260	150	125	300	300	260	260
GETR-PLN142	450	600	750	450	305	1 000	1 000	900	900
GETR-PLE80/90	85	115	110	50	38	120	120	110	110
GETR-PLE120/115	115	155	195	120	95	260	260	230	230
GETR-WPLN70	–	45	42	27	22	77	77	65	65
GETR-WPLN90	–	90	75	50	40	150	150	140	135
GETR-WPLN115	–	160	140	90	75	300	300	260	250

Mass moments of inertia

Designation	Mass moment of inertia $kg \cdot cm^2$ Reduction ratio i								
	3	4	5	8	10	16	20	25	40
GETR-PLN70	0,4	0,32	0,28	0,25	0,25	0,35	0,33	0,3	0,29
GETR-PLN90	1,01	0,78	0,68	0,59	0,57	0,89	0,82	0,76	0,7
GETR-PLN115	3,14	2,4	2,16	1,93	1,9	2,74	2,57	2,38	2,23
GETR-PLN142	16,8	12,2	10,3	8,7	8,4	14,5	13	11,9	10,8
GETR-PLE80/90	0,77	0,52	0,45	0,4	0,39	0,5	0,44	0,44	0,39
GETR-PLE120/115	2,63	1,79	1,53	1,32	1,3	1,75	1,5	1,49	1,3
GETR-WPLN70	–	0,65	0,6	0,53	0,52	0,64	0,59	0,59	0,53
GETR-WPLN90	–	1,33	1,19	1	0,97	0,64	0,59	0,59	0,53
GETR-WPLN115	–	5,92	5,44	4,99	4,88	1,37	1,19	1,19	1,01

Ordering example, ordering designation

Planetary gearbox

Gearbox	GETR
Planetary gearbox with extremely low backlash	PLN
Flange size 90 mm	90
Reduction ratio i = 8	8

Ordering designation 1×**GETR-PLN90-8**, *Figure 1*

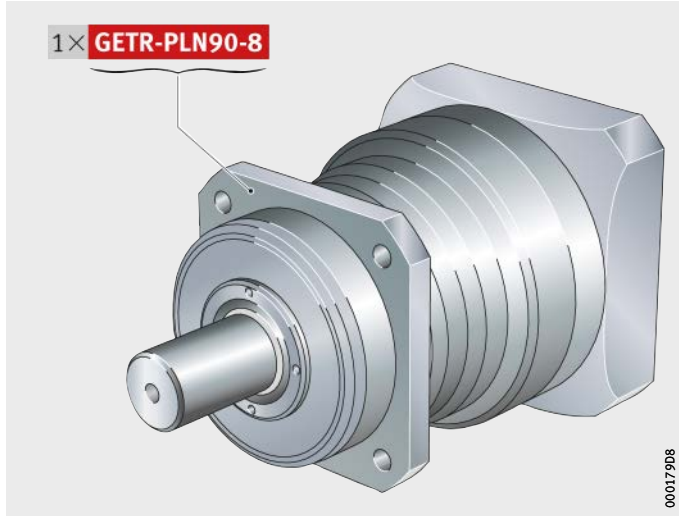

Figure 1
Ordering designation

Motor/gearbox unit

MOGE-AS

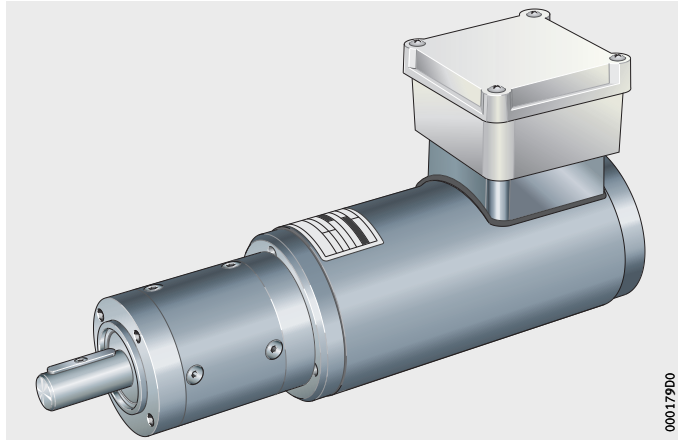

Motor/gearbox unit

Features

The asynchronous motor MOGE-AS with gearbox is an addition to the digital servo drives for linear actuators.

In combination with a frequency inverter, this gives a reliable and extremely economical electric drive system.

The asynchronous motor MOGE-AS is robust, maintenance-free and is of a simple mechanical design. The three phase winding is inserted in the stator and the rotor comprises an aluminium cage with short-circuited armatures.

In combination with a frequency inverter, the asynchronous motor MOGE-AS can be adjusted in very fine steps over a speed range. Transport functions can thus be carried out reliably at variable speeds.

The drive system is suitable for linear actuators with a guidance system based on track rollers or a recirculating ball bearing and guideway assembly and linear actuators with a drive element based on a toothed belt, toothed rack or ball screw drive.

They are generally supplied with a mounted spur gearbox, planetary gearbox or worm gearbox, depending on the motor, as a motor/gearbox unit MOGE-AS.

They can be fitted to the linear actuators using couplings and coupling housings. Various, optimally matched drive combinations are used for the different series of actuators.

If a linear actuator is to be run with continuous, rapid reversing operation, the use of a worm gearbox should be avoided.

Brushless servo motors

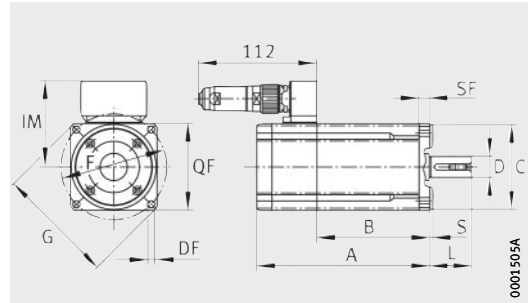

MOT-SMH

Dimension table · Dimensions in mm

Designation	Dimensions											
	A	B	SF	IM	DF	F	D	L	QF	C h6	S	G
MOT-SMH60	129,5	86,5	7	70	6	75	11	23	70	60	2,5	90
MOT-SMH60-C7-SINCOS[1]	163											
MOT-SMHA60-BR	161											
MOT-SMHA60-BR-C7-SINCOS[1]	209											
MOT-SMH82	163,5	107,5	10	81	6,5	100	14	30	82	80	3,3	112
MOT-SMH82-SINCOS	183,5											
MOT-SMHA82-BR	206,5											
MOT-SMHA82-BR-SINCOS	226,5											
MOT-SMH100	191,5	130,5	10	91	9	115	19	40	100	95	3,5	135
MOT-SMH100-SINCOS	211,5											
MOT-SMHA100-BR	238,5											
MOT-SMHA100-BR-SINCOS	258,5											
MOT-SMH10075	191,5	130,5	10	91	9	115	19	40	100	95	3,5	135
MOT-SMH10075-SINCOS	211,5											
MOT-SMH10075-BR	238,5											
MOT-SMH10075-BR-SINCOS	258,5											

[1] SMH(A)60(-BR) only available with SINCOS in certain cases.
Please ask for further information.

Brushless servo motors

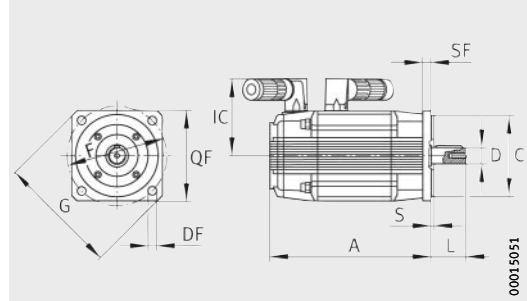

MOT-MH105

Dimension table · Dimensions in mm

Designation	Dimensions										
	A	SF	IC	DF	F	D	L	QF	C h6	S	G
MOT-MH105-08	317	10	90	9,5	115	19	40	105	95	3,5	140
MOT-MH105-08-SINCOS	337										
MOT-MHA105-08-BR	381										
MOT-MHA105-08-BR-SINCOS	401										

Brushless servo motors

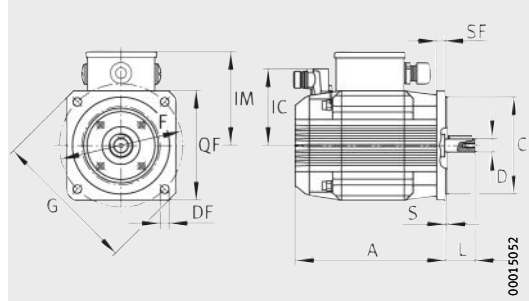

MOT-MH145, MOT-MH205

Dimension table · Dimensions in mm

Designation	Dimensions											
	A	SF	IM	IC	DF	F	D	L	QF	C h6	S	G
MOT-MH145-08	231	12	125	103	11,5	165	24	50	145	130	3,5	200
MOT-MH145-08-SINCOS	251											
MOT-MHA145-08-BR	305											
MOT-MHA145-08-BR-SINCOS	325											
MOT-MH145-45-08	231	12	125	103	11,5	165	24	50	145	130	3,5	200
MOT-MH145-45-08-SINCOS	251											
MOT-MHA145-45-08-BR	305											
MOT-MHA145-45-08-BR-SINCOS	325											
MOT-MH145-15	292	12	125	103	11,5	165	24	50	145	130	3,5	200
MOT-MH145-15-SINCOS	312											
MOT-MHA145-15-BR	366											
MOT-MHA145-15-BR-SINCOS	386											
MOT-MH145-30-28	416	12	125	103	11,5	165	24	50	145	130	3,5	200
MOT-MH145-30-28-SINCOS	436											
MOT-MHA145-30-28-BR	490											
MOT-MHA145-30-28-BR-SINCOS	510											
MOT-MH205-30-28	273	18	172	132	14	215	32	80	205	180	4	250
MOT-MH205-30-28-SINCOS	293											
MOT-MHA205-30-28-BR	372											
MOT-MHA205-30-28-BR-SINCOS	392											
MOT-MH205-30-50	342	18	172	132	14	215	32	80	205	180	4	250
MOT-MH205-30-50-SINCOS	362											
MOT-MHA205-30-50-BR	441											
MOT-MHA205-30-50-BR-SINCOS	461											

Planetary gearboxes

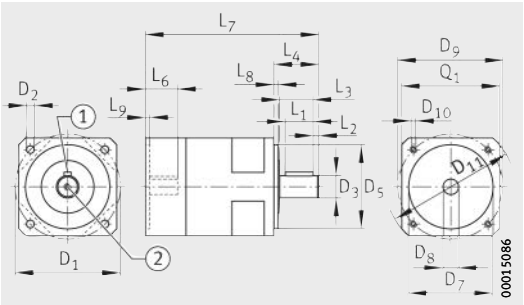

GETR-PLE

Dimension table (continued) · Dimensions in mm

Designation[1]	Gearbox stage Z	Ratio i	Suitable motors for mounting	Dimensions				
				D_1		D_2	D_3	D_5
				min.	max.		k6	g7
GETR-PLN70	1	3; 4; 5; 8; 10	**MOT-SMH60**	75	75	5,5	16	60
	2	16; 20; 25; 40						
GETR-PLN70-90	1	3; 4; 5; 8	**MOT-SMH82**	75	75	5,5	16	60
GETR-PLN90	1	3; 4; 5; 8; 10	**MOT-SMH82**	100	100	6,5	22	70
	2	16; 20; 25; 40						
GETR-PLN90-115	1	3; 4; 5; 8	**MOT-SMH100, MOT-MH105**	100	100	6,5	22	70
GETR-PLN115	1	3; 4; 5; 8; 10	**MOT-SMH100, MOT-MH105**	130	130	8,5	32	90
	2	16; 20; 25; 40						
GETR-PLN115-142	1	3; 4; 5; 8	**MOT-SMH145**	130	130	8,5	32	90
GETR-PLN142	1	3; 4; 5; 8; 10	**MOT-SMH145**	165	165	11	40	130
	2	16; 20; 25; 40						
GETR-PLE80-90	1	3; 4; 5; 8; 10	**MOT-SMH82**	100	100	6,5	20	80
	2	16; 20; 25; 40						
GETR-PLE120-115	1	3; 4; 5; 8; 10	**MOT-SMH100, MOT-MH105**	130	130	8,5	25	110
	2	16; 20; 25; 40						

[1] Add the required reduction ratio i to the designation:
Example:
GETR-PLN70 with reduction ratio 5: GETR-PLN70-5

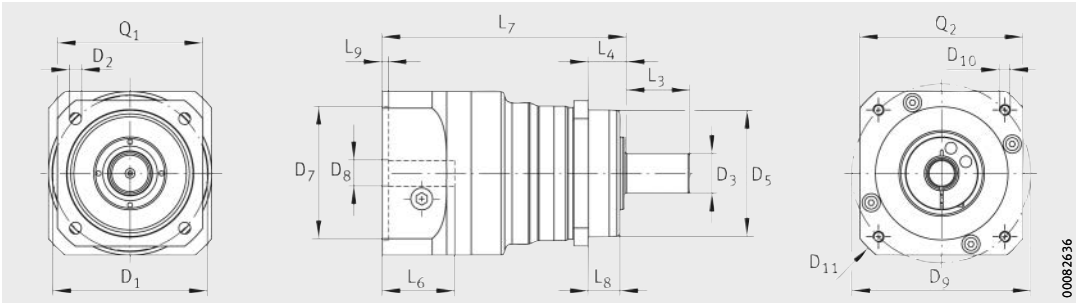

GETR-PLN

D_7	D_8	D_9	D_{10}	D_{11}	L_1	L_2	L_3	L_4	L_6	L_7	L_8	L_9	Q_1	Q_2
60	11	75	M5×10	92	–	–	28	48	23	137,5 166,5	19	3	70	70
80	14	10	M6×12	116	–	–	28	48	30	148	19	3,5	90	90
80	14	100	M6×12	116	–	–	36	56	30	158,5 191,5	17,5	3,5	90	90
95	19	115	M8×16	145	–	–	36	56	40	170	17,5	3,5	115	115
95	19	115	M8×16	145	–	–	58	88	40	201 241	28	3,5	115	115
130	24	165	M10×20	185	–	–	58	88	50	211	28	3,5	142	142
165	24	165	M12×24	185	–	–	80	110	64,5	276 335	28	4	142	142
80	14	100	M6×15	116	28	4	36	40	30	180,1 170	3	4	90	90
95	19	115	M8×20	145	40	5	50	55	40	213,1 228	4	4	115	115

Dimension table · Dimensions in mm

Designation[1]	Gearbox stage Z	Ratio i	Suitable motors for mounting	Dimensions					
				A_1	D_1 min.	D_1 max.	D_2	D_3 k6	D_5 g7
GETR-WPLN70	1	4; 5; 8; 10	**MOT-SMH60**	10	68	75	5,5	16	60
	2	16; 20; 25; 40		10					
GETR-WPLN70-90	1	4; 5; 8	**MOT-SMH82**	10	68	75	5,5	16	60
GETR-WPLN90	1	4; 5; 8; 10	**MOT-SMH82**	10	85	85	6,5	22	70
	2	16; 20; 25; 40		10					
GETR-WPLN90-115	1	4; 5; 8	**MOT-SMH100, MOT-MH105**	10	85	85	6,5	22	70
GETR-WPLN115	1	4; 5; 8; 10	**MOT-SMH100, MOT-MH105**	10	120	120	8,5	32	90
	2	16; 20; 25; 40		10					
GETR-WPLN115-142	1	4; 5; 8	**MOT-SMH145**	10	120	120	8,5	32	90

[1] Add the required reduction ratio i to the designation:
Example:
GETR-WPLN70 with reduction ratio 5: GETR-PLN70-5

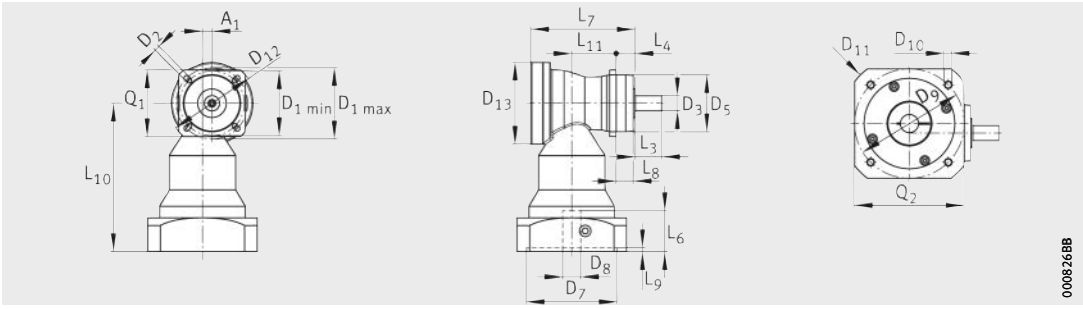

GETR-WPLN

D_7	D_8	D_9	D_{10}	D_{11}	D_{12}	D_{13}	L_3	L_4	L_6	L_7	L_8	L_9	L_{10}	L_{11}	Q_1	Q_2
60	11	75	M5×10	90	92	86	28	20	23	109,5	18	3	136	46,5	70	70
						86				157		3	136	94		
80	14	100	M6×12	90	92	86	28	20	30	109,5	19	3,5	144	46,5	70	90
80	14	100	M6×12	115	100	105	36	20	30	129	17,5	3,5	151	60,5	80	90
						86				171			136	108		
95	19	115	M8×16	145	100	105	36	20	40	129	17,5	3,5	161	60,5	80	115
95	19	115	M8×16	145	140	120	58	30	40	160	28	3,5	187,5	73,5	110	115
						105				190,5			151	112		
130	24	165	M10×20	185	140	120	58	30	50	160	28	4	198	73,5	110	142

Motor/gearbox unit

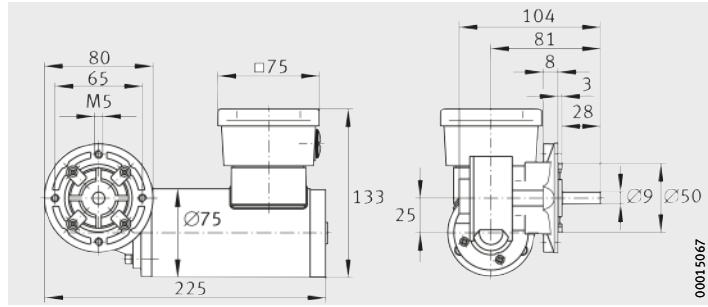

MOGE-AS1-SCHN

Dimension table · Dimensions in mm							
Ordering designation	Mass	Rated power	Rated current	Ratio	Gearbox output		Gearbox output torque
						Stud diameter	
	m_{tot}	P	I_N [A]	i	n_2		M_2
	≈kg	W	at 380 V	1	min^{-1}	∅	Nm
MOGE AS1-SCHN-10	3,5	75	0,3	10	270	9	1,9
MOGE AS1-SCHN-20				20	135		3,1
MOGE-AS1-PLE-60-4	3,6	75	0,3	4	675	14	1
MOGE-AS1-PLE-60-12				12	225		2,7
MOGE-AS2-STI-5	12	370	1,2	5	273	20	13
MOGE-AS2-STI-10				10	140		25

1) ① Motor with brake
② Motor without brake

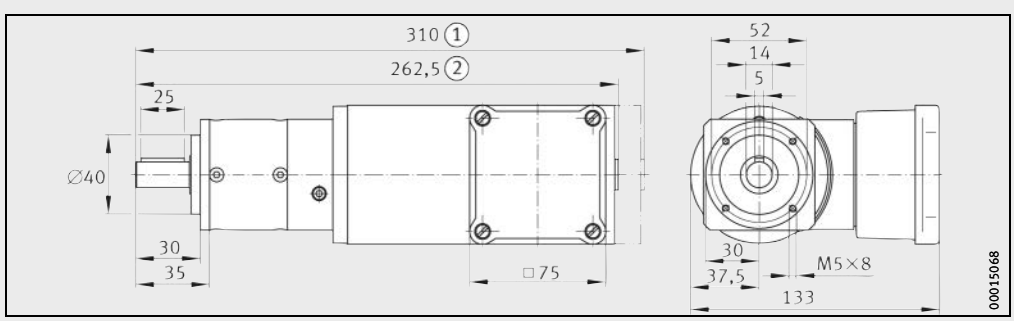

MOGE-AS1-PLE
①, ② 1)

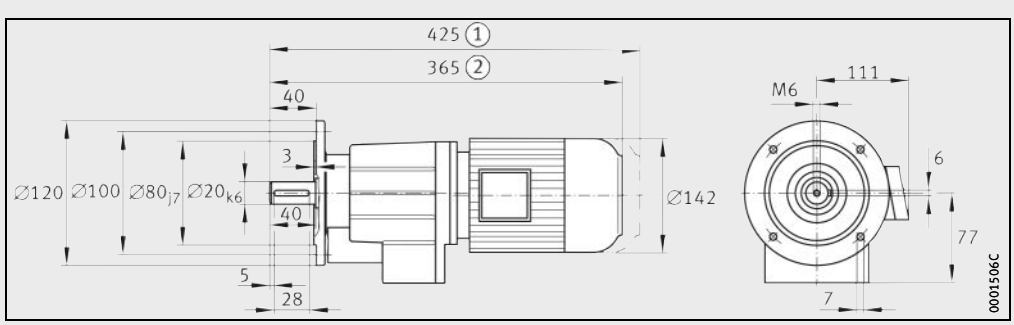

MOGE-AS2-STI
①, ② 1)

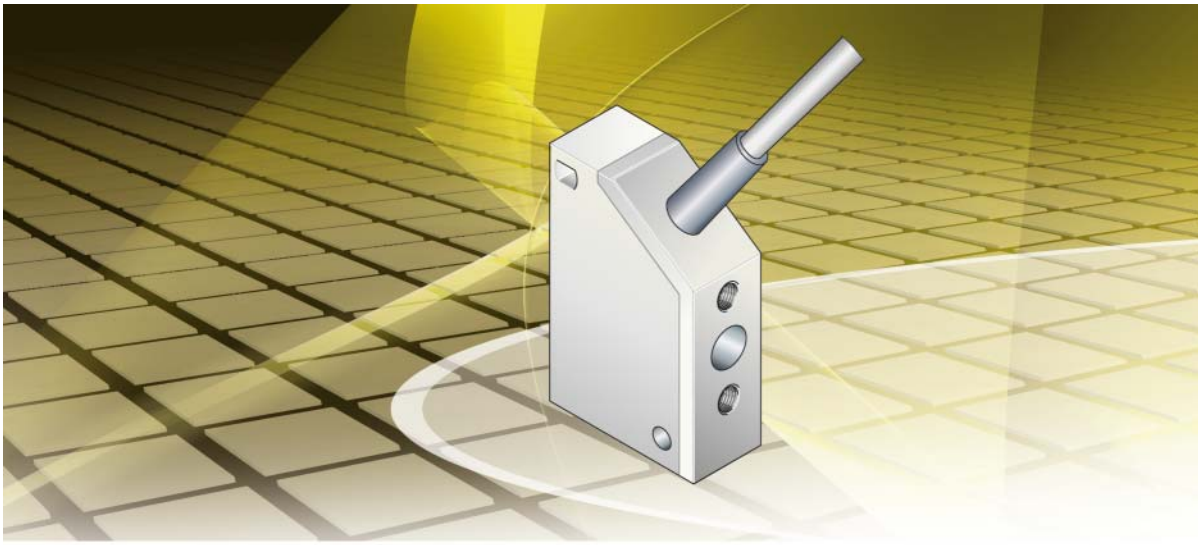

Inductive proximity switches

Inductive proximity switches

Inductive proximity switches

NS-INSOR52-PNP-OEFFNER

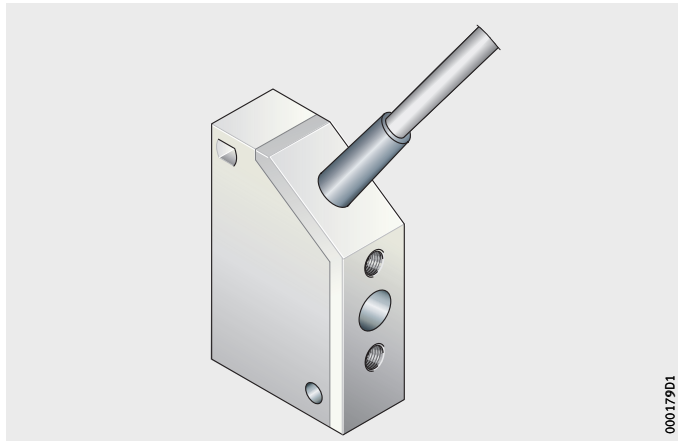

NS62599-IAF08B, NS626..-IAF

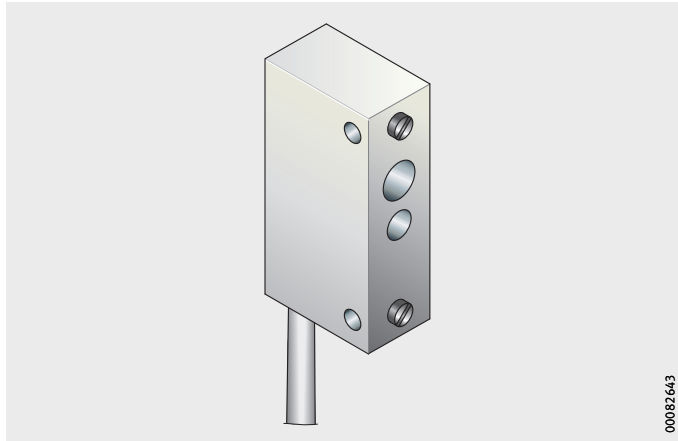

NS-IE5103-OEFF-MTKUSE, NS-IE5099-SCHL-MTKUSE

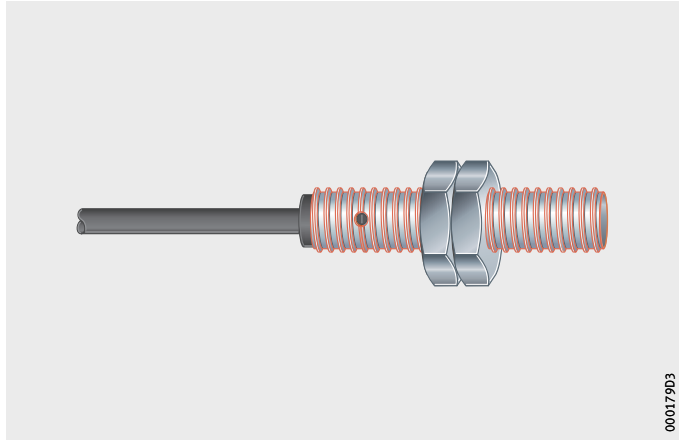

Inductive proximity switches

Features

Inductive proximity switches operate on the principle of the damped LC oscillator.

The coil of the oscillated circuit generates a high frequency magnetic field. This stray field escapes at the active surface of the proximity switch.

When metal enters the stray field, energy is drained off.
This causes damping of the oscillator. The resulting change in current consumption is then evaluated.

Allocation of proximity switches, linear actuator

Designation	For linear actuators
NS-INSOR52-PNP-OEFFNER	M(K)LF32..-ZR, M(K)LF52..-ZR M(K)LF52..-E-ZR, M(K)LF52..-EE-ZR
NS-IS5001-PNP	MLFI20..-ZR, MLFI25..-ZR
NS-IS5002-PNP	MLFI50..-C..-ZR MLFI140..-3ZR, MLFI200..-3ZR
NS-IS5036-PNP-OEFFNER	MKUVE20..-C-ZR
NS-IS5035-PNP-SCHLIESSER	MKU(S,V)E25..-ZR MKKUSE20..-ZR MKUVE15..-KGT MKUVE20..-KGT MKUSE25..-KGT MKKUVE20..-KGT/5 MDKUVE15..-3ZR MDKU(S,V)E25..-3ZR MDKUVE35..-3ZR MDKUVE15..-KGT MDKU(S,V)E25..-KGT MDKUVE35..-KGT
NS-62599-IAF08B	M(K)LF32..-ZR, M(K)LF52..-ZR
NS-62627-IAF08B	M(K)LF52..-E-ZR, M(K)LF52..-EE-ZR MLFI50..-C..-ZR MLFI140..-3ZR, MLFI200..-3ZR MKUVE20..-C-ZR MKU(S,V)E25..-ZR MKKUSE20..-ZR MKUVE15..-KGT MKUVE20..-KGT MKUSE25..-KGT MKKUVE20..-KGT/5 MDKUVE15..-3ZR MDKU(S,V)E25..-3ZR MDKUVE15..-KGT MDKU(S,V)E25..-KGT
NS-62609-IAF10BA	MDKUVE35..-KGT
NS-62646-IAF10B	MDKUVE35..-3ZR
NS-IE5103PNP-OEFF-MTKUSE NS-IE5099PNP-SCHL-MTKUSE	MTKUSE25..-A-ZS

NS-INSOR52-PNP-OEFFNER

Designation, dimensions and technical data of the inductive proximity switches NS-INSOR52-PNP-OEFFNER, see tables and *Figure 1* to *Figure 3*, page 791.

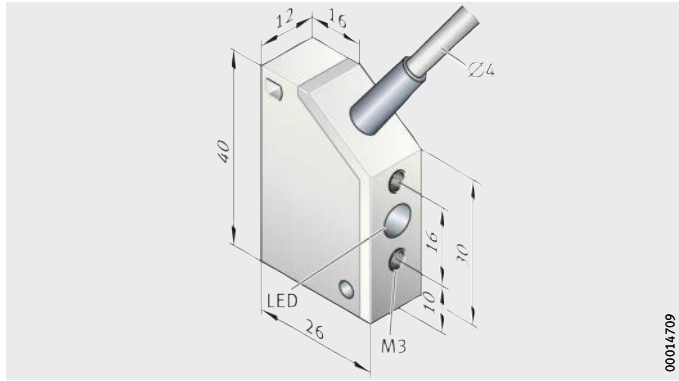

Figure 1
NS-INSOR52-PNP-OEFFNER

Description

Designation	Description
NS-INSOR52-PNP-OEFFNER	Proximity switch PNP opener (INA standard)

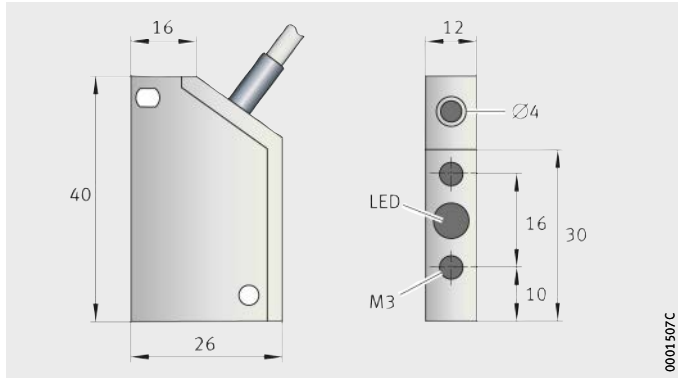

Figure 2
Dimensions

Technical data

Feature	Technical data
Cable type, cable length	3×0,25 mm^2, 6 m
Switching spacing	4,0 mm ±10%
Switching tag Fe 37	12×12×1 mm
Switching hysteresis	≧ 1% to ≦ 15%
Reproducibility	0,01 mm
Ambient temperature	–25 °C to +70 °C
Protection type to IEC 529	IP 67
LED display	Yes
Housing material	Plastic
Voltage rating	24 V DC
Voltage range	10 V DC to 35 V DC
Intrinsic current consumption	≦ 15 mA
Maximum load current	300 mA
Residual voltage	≦ 2,5 V DC
Switching frequency	1 000 Hz
Short circuit protection, reverse polarity protection	Yes
Not flush	–

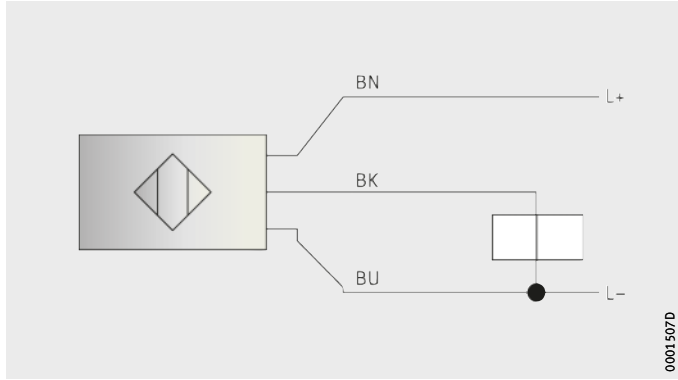

BN = brown
BK = black
BU = blue

Figure 3
Assignment scheme

Location and activation

This proximity switch is located on the carrier profile by means of retaining plates. Activation is carried out by a switching tag on the carriage unit.

NS-IS5002-PNP-OEFFNER NS-IS5001-PNP-SCHLIESSER

Designation, dimensions and technical data of the inductive proximity switches NS-INSOR52-PNP-OEFFNER and NS-IS5001-PNP-SCHLIESSER, see tables and *Figure 4* to *Figure 6*, page 793.

Figure 4
NS-IS5002-PNP, NS-IS5001-PNP

Description

Designation	Description
NS-IS5002-PNP-OEFFNER	Proximity switch PNP opener (INA standard)
NS-IS5001-PNP-SCHLIESSER	Proximity switch PNP closer

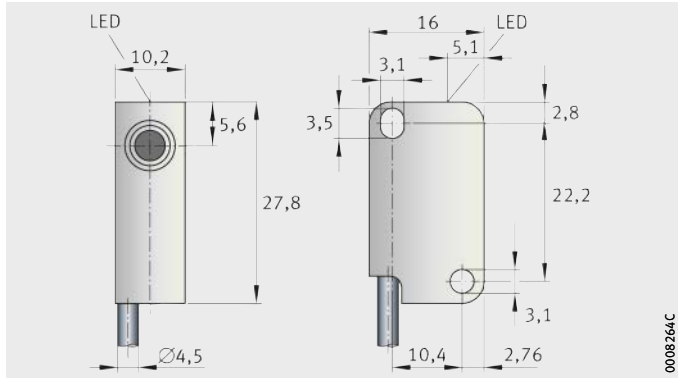

Figure 5
Dimensions

Technical data

Feature	Technical data
Electrical design	DC PNP
Output function	NS-IS5002-PNP-OEFFNER: opener NS-IS5002-PNP-SCHLIESSER: closer
Operating voltage	10 V DC – 36 V DC
Current carrying capacity	200 mA
Short circuit protection	No
Reverse polarity protection	No
Overload protection	No
Voltage drop	$<$ 1 V
Current consumption	$<$ 15 mA (24 V)
Effective switching distance	2,0 mm ±10%
Working distance	0 mm to 1,6 mm
Switching drift point	≧ –10% to ≦ 10%
Hysteresis	≧ 1% to ≦ 15%
Switching frequency	800 Hz
Correction factors	Steel (St37) = 1 High-grade steel (V2A): approx. 0,7 Brass: approx. 0,4 Aluminium: approx. 0,3 Copper: approx. 0,2
Ambient temperature	–25 °C to +80 °C
Protection type	IP 67
EMC	EN 60 947-5-2; EN 55 011 Class B
Housing material	PBT
Function display Switching status LED	Yellow
Connector	PVC cable, 2 m; 3×0,14 mm^2

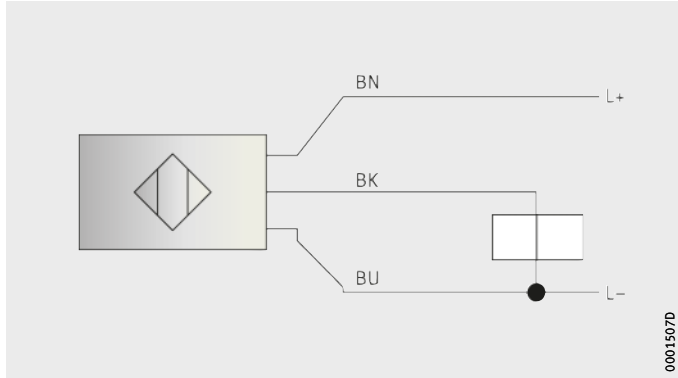

BN = brown
BK = black
BU = blue

Figure 6
Assignment scheme

Location and activation

These proximity switches are located on the carrier profile by means of retaining plates. Activation is carried out by a switching tag on the carriage unit.

NS-IX5036-PNP-OEFFNER, NS-IS5035-PNP-SCHLIESSER

These proximity switches are identical in terms of design envelope with NS-IS5002. They do not have a firmly attached cable but instead a plug contact with an M8 thread.

For connecting proximity switches, a cable socket LTDO-E11488 with a 10 m long connection cable is available.

Designation, dimensions and technical data of the inductive proximity switches NS-IS5036-PNP-OEFFNER and NS-IS5035-PNP-SCHLIESSER, *Figure 7*, *Figure 8* and table.

Figure 7
NS-IS5036-PNP,
NS-IS5035-PNP

Designation

Designation	Description
NS-IS5036-PNP-OEFF-MLFI	Proximity switch PNP opener (INA standard)
NS-IS5035-PNP-SCHL-MLFI	Proximity switch PNP closer

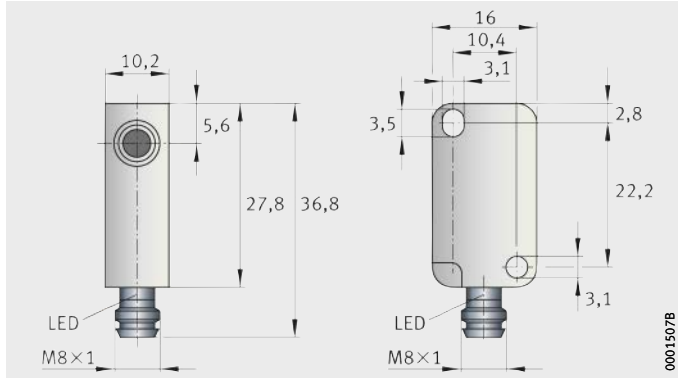

Figure 8
Dimensions

Technical data

Feature	Technical data
Connection type	M8 plug connector
Effective switching distance	2,0 mm ±10%
Switching hysteresis	≧ 1% to ≦ 15%
Ambient temperature	–25 °C to +80 °C
Protection type to IEC 529	IP 67
LED display	Yes
Housing material	PBT
Voltage rating	24 V DC
Voltage range	10 V DC to 36 V DC
Intrinsic current consumption	< 15 mA (at 24 V)
Current carrying capacity	200 mA
Residual current	< 0,5 mA
Switching frequency	800 Hz
Short circuit protection, reverse polarity protection	No
Flush	–

Location and activation

These proximity switches are located on the carrier profile by means of retaining plates. Activation is carried out by a switching tag on the carriage unit.

NS-IE5103-OEFF-MTKUSE, NS-IE5099-SCHL-MTKUSE

These proximity switches are used specifically for telescopic actuators. They are of a cylindrical shape and are located on the stationary carrier profile by means of fixing brackets. They are activated by means of switching tags located on the movable profiles.

Designation, dimensions and technical data of the inductive proximity switches NS-IE5103-OEFF-MTKUSE and NS-IE5099-SCHL-MTKUSE, see tables and *Figure 9* to *Figure 11*, page 797.

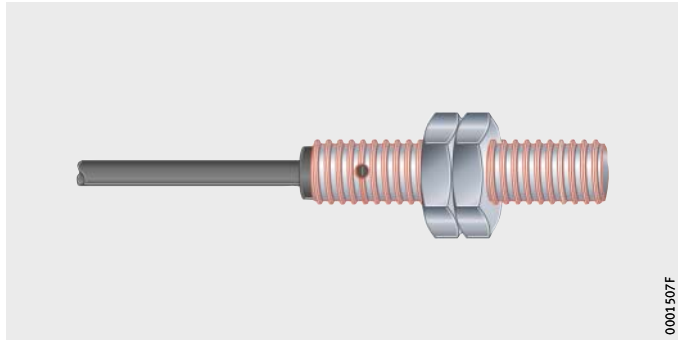

Figure 9
NS-IE5103-OEFF-MTKUSE, NS-IE5099-SCHL-MTKUSE

Designation

Designation	Description
NS-IE5103-OEFF-MTKUSE	Proximity switch PNP opener (INA standard)
NS-IE5099-SCHL-MTKUSE	Proximity switch PNP closer

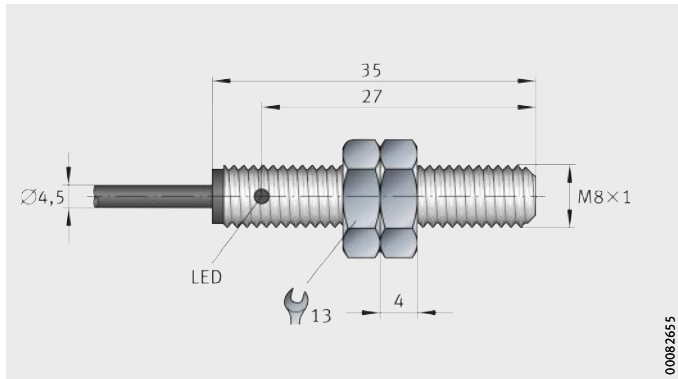

Figure 10
Dimensions

Technical data

Feature	Technical data
Electrical design	DC PNP
Output function	NS-IE5103-OEFF-MTKUSE: opener NS-IE5099-SCHL-MTKUSE: closer
Operating voltage	10 V DC to 36 V DC
Current carrying capacity	200 mA
Short circuit protection	No
Reverse polarity protection	No
Overload protection	No
Voltage drop	< 1 V
Current consumption	< 15 mA (24 V)
Effective switching distance	2,0 mm ±10%
Working distance	0 mm – 1,6 mm
Switching drift point	≧ –10% to ≦ 10%
Hysteresis	≧ 1% to ≦ 15%
Switching frequency	800 Hz
Correction factors	Steel (St37) = 1 High-grade steel (V2A): approx. 0,7 Brass: approx. 0,4 Aluminium: approx. 0,3 Copper: approx. 0,2
Ambient temperature	–25 °C to +80 °C
Protection type	IP 67
EMC	EN 60 947-5-2; EN 55 011 Class B
Housing material	PBT
Function display Switching status LED	Yellow
Connector	PVC cable, 2 m; 3×0,14 mm^2

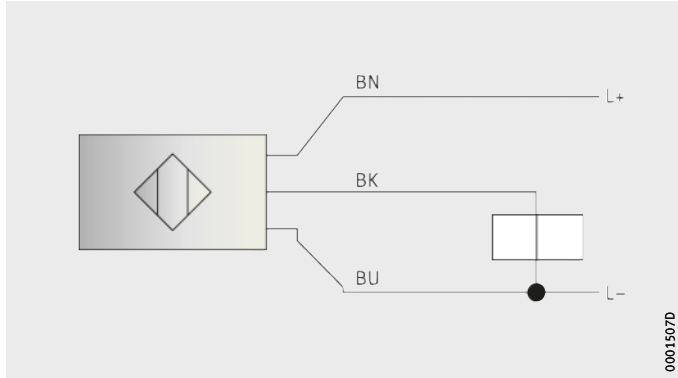

BN = brown
BK = black
BU = blue

Figure 11
Assignment scheme

Location and activation

These proximity switches are located on the carrier profile by means of fixing brackets. They are activated by means of switching tags located on the movable profiles.

Inductive limit switches

A further possibility for equipping linear actuators with initiators lies in the use of inductive limit switches inserted in the slots in the linear actuators, see tables and pages starting *Figure 12*. Each proximity switch is clamped in the slot using two screws.

They are available in two sizes for an 8 mm and a 10 mm slot, either with a 6 m long cable or with a 300-mm cable and a plug to M8.

A cable socket LTDO 11488 can be connected to this plug. This has a 10 m long cable.

Designation of inductive limit switches

Inductive limit switch Designation	Design	
NS 62599-IAF08B	8 mm slot	6 m cable length
NS 62627-IAF08B	8 mm slot	300 mm cable with plug to M8
NS 62609-IAF10BA	10 mm slot	6 m cable length
NS 62646-IAF10BA	10 mm slot	300 mm cable with plug to M8

NS 62599-IAF08B

① Active surface

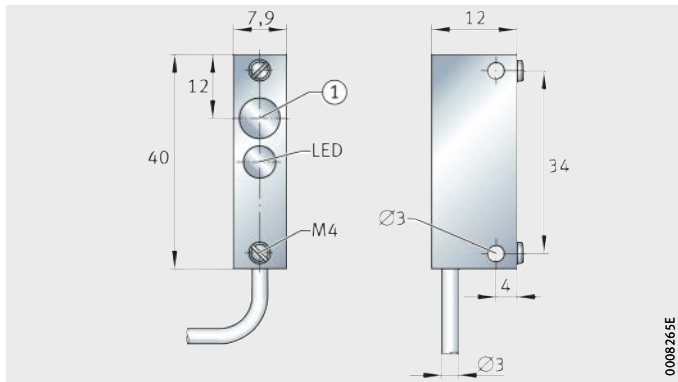

Figure 12
Dimensions of inductive limit switches

NS 62627-IAF08B

① Active surface

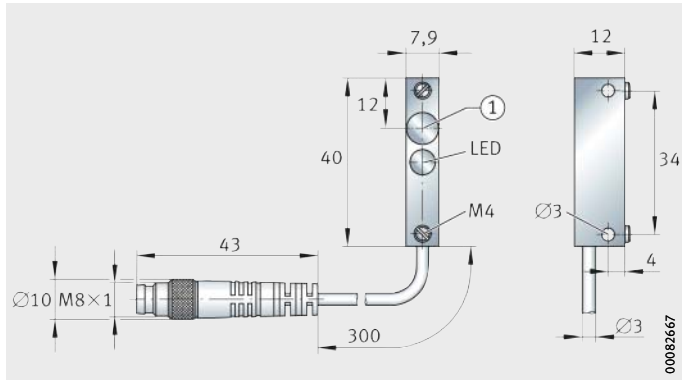

Figure 13
Dimensions of inductive limit switches

NS 62609-IAF10BA

① Active surface

Figure 14
Dimensions
of inductive limit switches

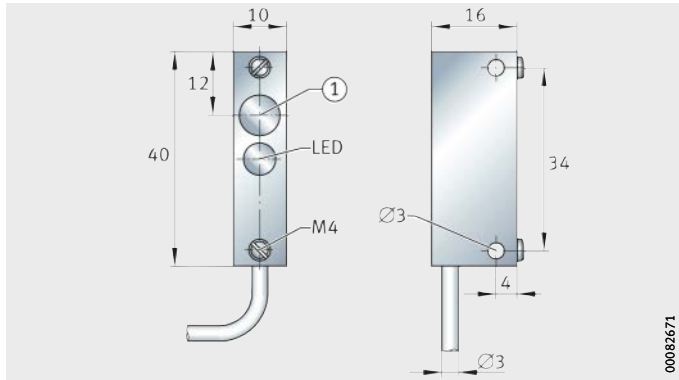

NS 62646-IAF10BA

① Active surface

Figure 15
Dimensions
of inductive limit switches

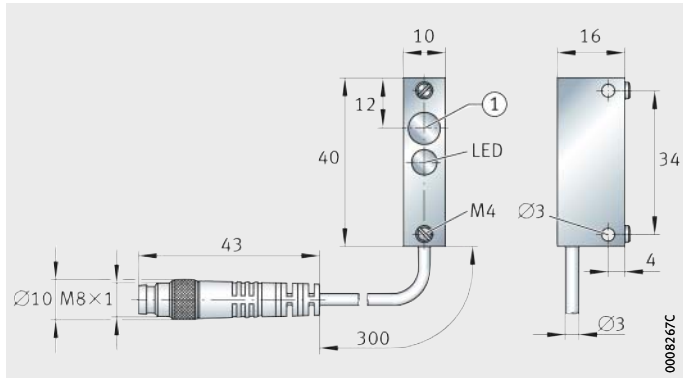

Assignment of inductive limit switches to T-slots in actuators

Designation	Proximity switch with 6 m long cable	Proximity switch with 300 mm long cable and M8 plug	Switching tag subassembly
MLF32..-ZR MKLF32..-ZR	NS-62599-IAF08B	NS-62627-IAF08B	SFAH32/ 68100-MLF[1)]
MLF52..-ZR MKLF52..-ZR			SFAH52/ 68100-MLF
MLF52..-E-ZR MKLF52..-E-ZR			
MLF52..-EE-ZR MKLF52..-EE-ZR			
MLFI34..-ZR MKUVE15..-ZR			
MLFI50..-B-ZR MKUVE20..-B-ZR	NS-62599-IAF08B	NS-62627-IAF08B	SFAH50/ 68100-MLFI
MLFI50..-C-ZR MKUVE20..-C-ZR			SFAH50/ 68100-MLFI
MLFI140..-3ZR MDKUVE15..-3ZR			SFAH200/ 68100-MLFI[1)]
MLFI200..-3ZR MDKUVE25..-3ZR MDKUSE25..-3ZR			SFAH200/ 68100-MLFI
MKUVE25..-ZR MKUSE25..-ZR			SFAH50/ 68100-MLFI
MDKUVE35..-3ZR	NS-62609-IAF10B	NS-62646-IAF10B	SFAH200/ 68100-MLFI
MKKUSE20..-ZR	NS-62599-IAF08B	NS-62627-IAF08B	SFAH50/ 68100-MLFI
MKUVE15..-KGT			
MKUVE20..-KGT	NS-62599-IAF08B	NS-62627-IAF08B	SFAH50/ 68100-MLFI
MKUSE25..-KGT			SFAH50/ 68100-MLFI
MDKUVE15..-KGT			SFAH200/ 68100-MLFI[1)]
MDKUVE25..-KGT MDKUSE25..-KGT			SFAH200/ 68100-MLFI
MDKUVE35..-KGT	NS-62609-IAF10B	NS-62646-IAF10B	SFAH200/ 68100-MLFI
MKKUVE20..-KGT/5	NS-62599-IAF08B	NS-62627-IAF08B	SFAH50/ 68100-MLFI

1) A limit switch can only be fitted in the lowest lateral T-slot.

Technical data, valid for inductive proximity switches for fitting in slots, see table and *Figure 16*.

Technical data

Feature	Technical data
Measurement switching distance	2 mm
Mounting method	Flush
Effective switching distance	1,8 mm to 2,2 mm
Correction factors	Brass: approx. 0,45 Aluminium: approx. 0,4 Copper: approx. 0,3
Repeat accuracy	≦ 0,1 · effective switching distance
Operating voltage	10 V DC to 30 V DC
Hysteresis	≧ 1% to ≦ 20%
Idle current	≦ 10 mA
Measurement operating current	< 150 mA
Voltage drop	≦ 3,5 V
Switching frequency	800 Hz
Ambient temperature	−25 °C to +70 °C
Output function	PNP opener
Short circuit resistance, response value	Synchronising, > 180 mA
Reverse polarity protection	Integrated
EMC	EN 60 947-5-2
Insulation testing AC_{eff}	500 V
Protection type	IP 67
Housing material	Aluminium
Function display Switching status LED	Yellow
Connector	PVC cable, 6 m; 3×0,14 mm^2

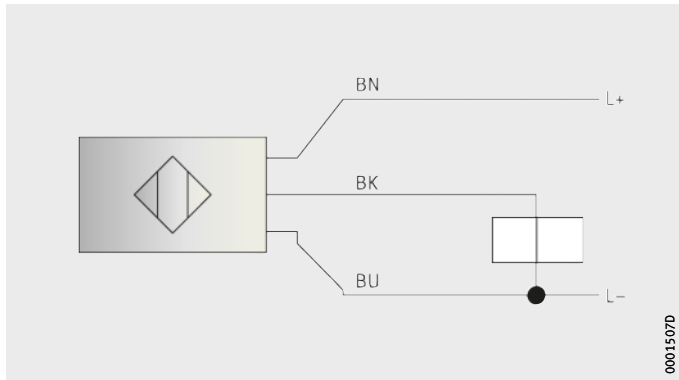

BN = brown
BK = black
BU = blue

Figure 16
Assignment scheme

Cable socket LTDO

The cable socket LTDO can be used as a connection cable between initiators with plug to M8 and the controller. The cable length is 10 m.

Designation, dimensions and technical data of the cable socket LTDO, see tables and *Figure 17* to *Figure 19*, page 803.

Figure 17
Cable socket LTDO

Designation

Designation	Description
LTDO-E11488	Cable socket LTDO

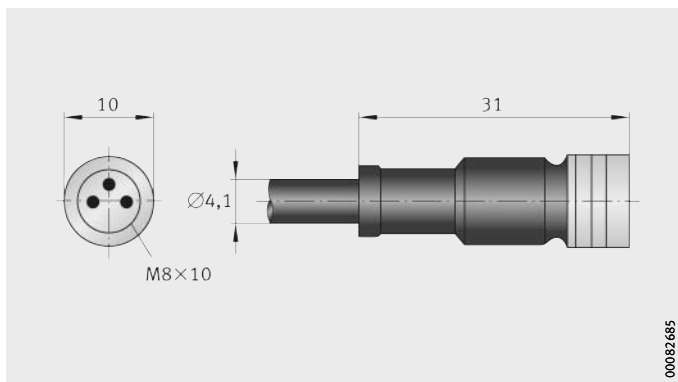

Figure 18
Dimensions

Technical data

Feature	Technical data
Electrical design	AC/DC
Operating voltage	60 V AC, 75 V DC
Current carrying capacity	3 A
Design	Straight
Ambient temperature	–25 °C to +85 °C
Protection type to IEC 529	IP 68
Material of grip body	PUR
Material of union nut	Brass; nickel plated
Tightening torque of union nut	0,6 Nm to 0,7 Nm
Connector	PUR cable, halogen-free, 10 m; 3×0,25 mm^2 (32 · ∅ 0,1 mm); ∅ 4,1 mm
Sheath colour	Black

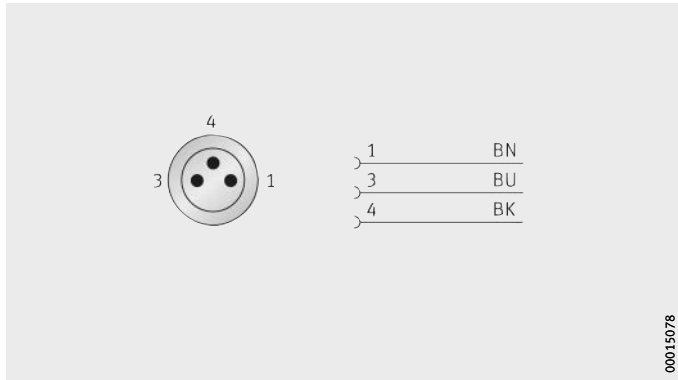

BN = brown
BU = blue
BK = black

Figure 19
Assignment scheme

Proximity switch set NSS

Proximity switches are available as a set, comprising 3 proximity switches, 3 retaining plates, 1 switching tag with fixing screws and a junction box with fixing material and a cable with a Sub-D plug.

Two proximity switches are used to restrict the travel distance, while the third is used as a reference point switch. The limit initiator and reference switch are connected in the junction box by means of a terminal strip.

The length of the cable with the Sub-D plug can be 5 m, 7,5 m, 10 m, 15 m, 20 m or more. For connection to STUNG-CPX3 and third party controllers, the Sub-D plug must be removed.

The proximity switches are connected to STUNG-CPX3 by means of plugs to X12. Only one proximity switch can be connected to STUNG-CPX3Sxx-I-O as a reference.

Available designs: see table.

Available designs

Designation	Design	For linear actuators
NSS.MLF52-130-ZR-3200	Standard	MLF32 MLF52 MKUVE25 MKUSE25
NSS-COMPAX-FLX	For flexible trunking	
NSS.MDKUVE15-3ZR-3200	Standard	MLFI140 MLFI200 MDKUVE15 MDKUVE25 MDKUSE25
NSS.MDKUVE15-3ZR-KT-3200	For flexible trunking	
NSS.MLFI20-ZR-3200	Standard	MLFI20
NSS.MLFI25-ZR-3200	Standard	MLFI25
NSS.MTKUSE25-ZS-3200	Standard	MTKUSE25

Mounting

The switching tab is mounted on the carriage, the junction box and the initiators on the side of the drive shaft, *Figure 20*.

If the drive shaft protrudes on both sides, the customer must specify the side to be used for mounting.

X = switching distance

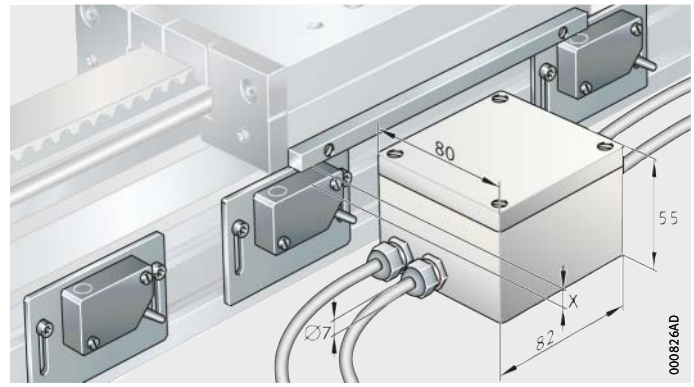

Figure 20
Mounting

Initiators

For operation of digital servo controllers, at least one initiator is required as a reference if a motor with a resolver is used.

Either inductive switches (PNP openers) or mechanical limit switches may be used as limit switches.

INA uses inductive switches as standard.

Junction box

The junction box of the initiator set may also be ordered separately.

The switching distance is dependent on the material of the switching tag and the type of proximity switch.

Assignment plan

If a third party controller or CPX3 controller is used, the Sub-D plug must be removed by the customer and the wiring planned out in accordance with the specific controller, *Figure 21*.

① PNP opener
② Initiator box

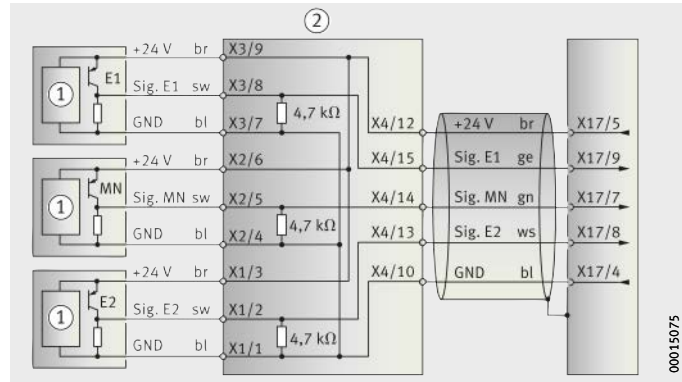

Figure 21
Assignment plan
for initiators with initiator box

Ensure that the initiator is free from bouncing.

Ordering example, ordering designation

Proximity switch

	Proximity switch	NS
	Type Insor 52	INSOR52
	Positive logic	PNP
	Design of opener	OEFFNER
Ordering designation	1×**NS-INSOR52-PNP-OEFFNER**, *Figure 22*	

Figure 22
Ordering designation

Cable socket

	Cable socket	LTDO
	Type E11488	E11488
Ordering designation	1×**LTDO-E11488**, *Figure 23*	

Figure 23
Ordering designation

Proximity switch set

	Proximity switch set Suitable for actuators including type MLF52 GTN	NSS MLF52-130-ZR 3200
Ordering designation	1×**NSS.MLF52-130-ZR-3200**, *Figure 24*	

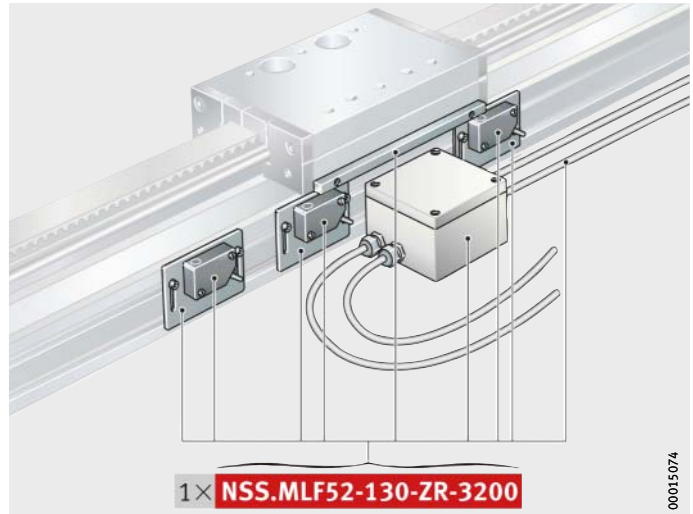

Figure 24
Ordering designation

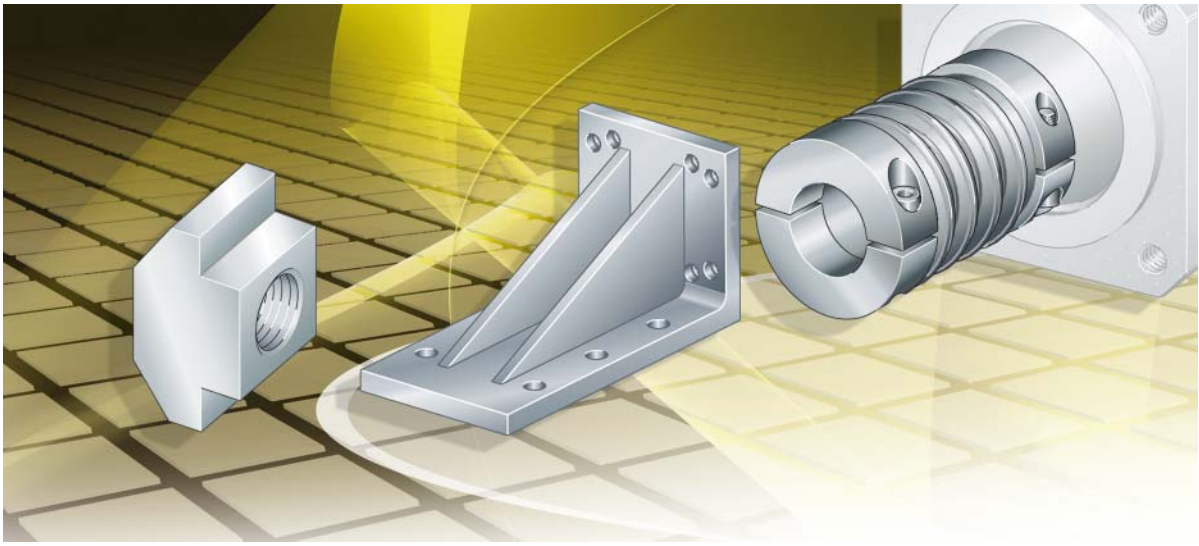

Mechanical accessories

Mechanical accessories

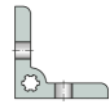

Fixing brackets

WKL

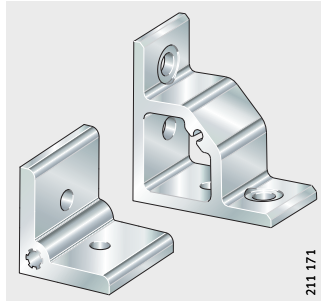

Connecting brackets

WKL

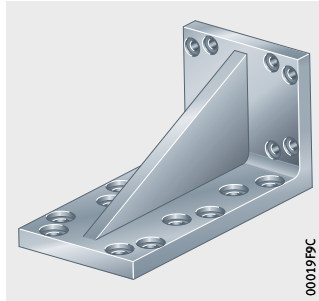

WKL

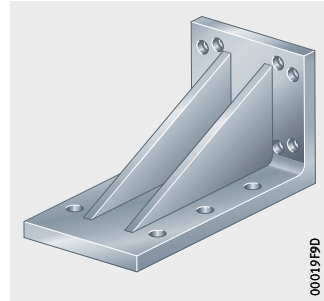

WKL

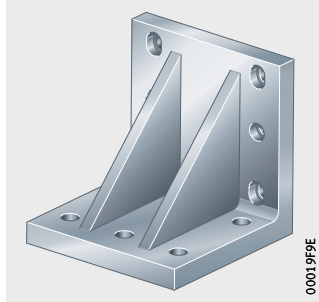

WKL

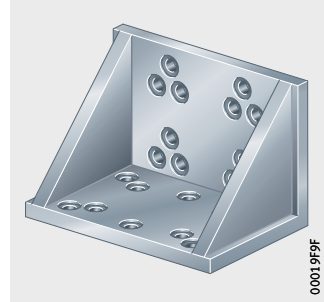

WKL

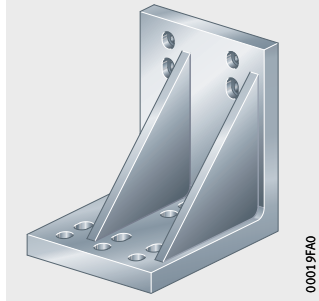

Fixing brackets and connecting brackets

Features

Fixing brackets and connecting brackets are used to mount linear actuators on the adjacent construction. These brackets are also suitable for the construction of multi-axis systems. The brackets can also be used to mount accessories on linear actuators.

For mounting actuators on the adjacent construction, clamping lugs should in many cases be used in preference to brackets.

Fixing brackets WKL

Fixing brackets are frequently used where accessories must be mounted on the support rail or the carriage unit. They are also suitable for mounting linear actuators on the adjacent construction, *Figure 1*. Connecting brackets should be used in preference for the construction of multi-axis systems.

Fixing brackets are made from anodised profiled aluminium and are supplied without screws and nuts.

Note the maximum tightening torque for the fixing screws.

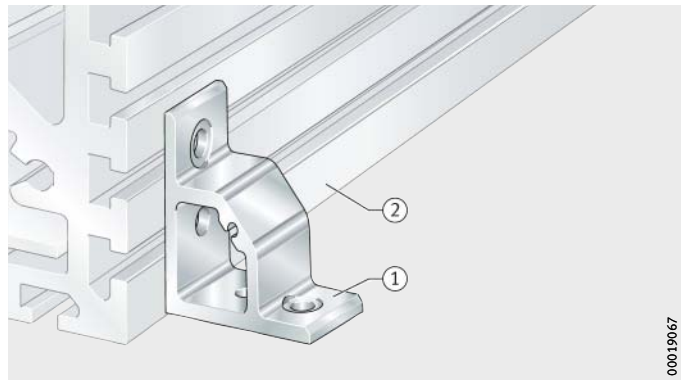

① Fixing bracket WKL
② Support rail

Figure 1
Mounting using fixing bracket

Connecting brackets WKL

Connecting brackets are standardised connectors. They allow the economical and efficient construction of multi-axis handling units comprising linear actuators. These connecting brackets can be used to combine different linear actuators to form multi-axis units, *Figure 2*.

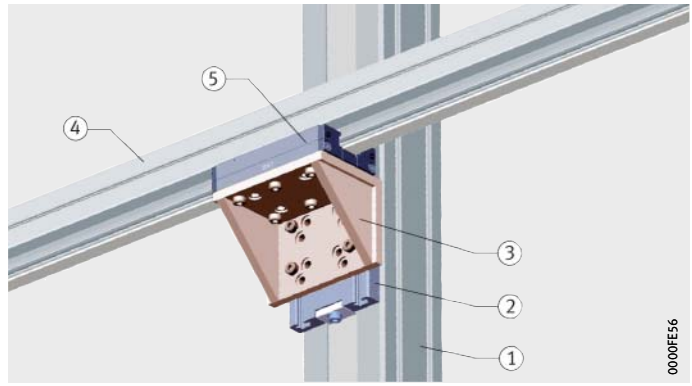

① Base actuator
② Carriage unit of base actuator
③ Connecting bracket WKL
④ Combination actuator
⑤ Carriage unit of combination actuator

Figure 2
Combination of actuators by means of connecting brackets

Connecting brackets are available in various basic designs.
On the one hand, brackets vary in height and width.
On the other hand, different hole patterns are necessary as a function of the specific linear actuator.

These connecting brackets are made from cast aluminium.

The allocation tables, see page 814, describe which hole pattern matches which mounting arrangement, starting from the combination of the base actuator and the combination actuator.

The connecting brackets are supplied without screws, T-nuts or nuts. These element must be ordered separately.

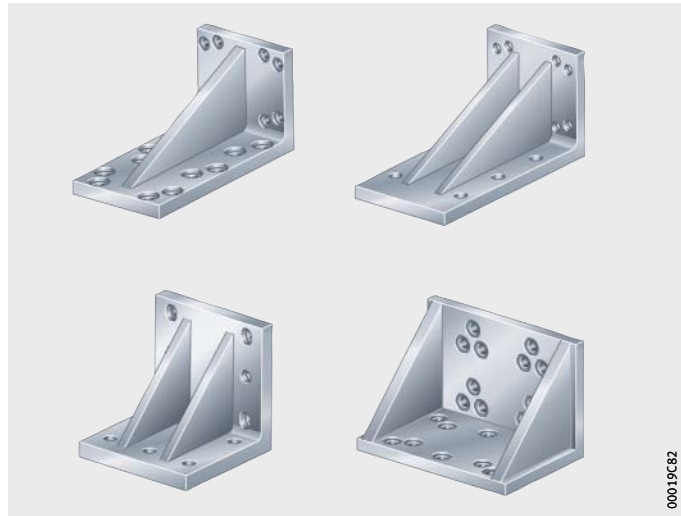

Figure 3
Connecting brackets

Mounting arrangement 1

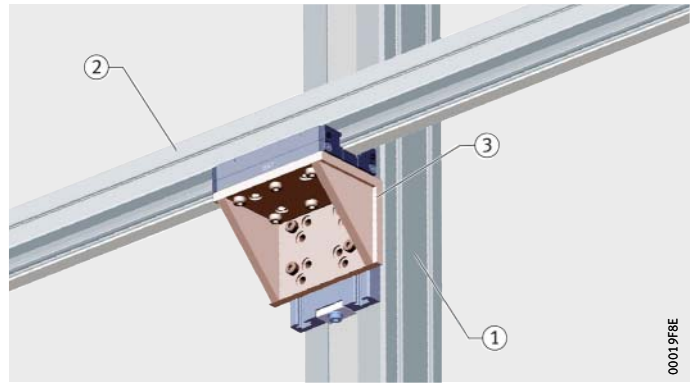

① Base actuator
② Combination actuator
③ Connecting bracket

Figure 4
Mounting arrangement 1
Allocation, see table

Mounting arrangement 1
Allocation, *Figure 4*

Base actuator	Combination actuator	Connecting bracket
MLFI25..-ZR	MLFI25..-ZR	WKL-75×150×75-B03
MLFI50..-C-ZR MKUVE20..-C-ZR..-N MKUVE20..-KGT-N	MLFI25..-ZR	WKL-75×150×75-B03
	MLFI50..-C-ZR	WKL-150×100×200-B01
	MKUVE20..-C-ZR-N	WKL-150×100×200-B01
	MKUVE20..-KGT-N	WKL-150×100×200-B01
MLF32..-ZR	MLFI25..-ZR	WKL-75×150×75-B01
	MLFI50..-C-ZR	WKL-75×150×75-B02
	MKUVE20..-C-ZR-N	WKL-75×150×75-B02
	MKUVE20..-KGT-N	WKL-75×150×75-B02
	MLF32..-ZR	WKL-100×100×150-B01
MLF52..-ZR	MLFI25..-ZR	WKL-100×100×150-B04
	MLFI50..-C-ZR	WKL-100×100×150-B04
	MKUVE20..-C-ZR-N	WKL-100×100×150-B04
	MKUVE20..-KGT-N	WKL-100×100×150-B04
	MLF32..-ZR	WKL-100×100×150-B04
	MLF52..-ZR	WKL-150×150×150-B05
MLF52..-E-ZR	MLFI25..-ZR	WKL-150×150×150-B02
	MLFI50..-C-ZR	WKL-150×150×150-B02
	MKUVE20..-C-ZR-N	WKL-150×150×150-B02
	MKUVE20..-KGT-N	WKL-150×150×150-B02
	MLF32..-ZR	WKL-150×150×150-B07
	MLF52..-ZR	WKL-150×150×150-B04
	MLF52..-E-ZR	WKL-200×200×200-B04
MLF52..-EE-ZR	MLFI25..-ZR	WKL-150×150×150-B05
	MLFI50..-C-ZR	WKL-150×150×150-B06
	MKUVE20..-C-ZR-N	WKL-150×150×150-B06
	MKUVE20..-KGT-N	WKL-150×150×150-B06
	MLF32..-ZR	WKL-150×150×150-B08
	MLF52..-ZR	WKL-150×150×150-B05
	MLF52..-E-ZR	WKL-200×200×250-B05
	MLF52..-EE-ZR	WKL-200×200×250-B02
MKUVE25..-ZR MKUSE25..-ZR MKUSE25..-KGT	MLFI25..-ZR	WKL-100×100×150-B05
	MLFI50..-C-ZR	WKL-100×100×150-B05
	MKUVE20..-ZR-N	WKL-100×100×150-B05
	MKUVE20..-KGT-N	WKL-100×100×150-B05
	MLF32..-ZR	WKL-100×100×150-B05

Mounting arrangement 1
Allocation, *Figure 4*
(continued)

Base actuator	Combination actuator	Connecting bracket
(continued) MKUVE25..-ZR MKUSE25..-ZR MKUSE25..-KGT	MLF52..-ZR	WKL-150×100×160-B08
	MLF52..-E-ZR	WKL-200×200×250-B06
	MLF52..-EE-ZR	WKL-200×200×250-B04
	MKUVE25..-ZR	WKL-200×200×250-B06
	MKUSE25..-ZR	WKL-200×200×250-B06
	MKUSE25..-KGT	WKL-200×200×250-B06
MKUVE25..-ZR-N MKUSE20..-ZR-N	MLFI25..-ZR	WKL-100×100×150-B03
	MLFI50..-C-ZR	WKL-150×100×160-B03
	MKUVE20..-ZR-N	WKL-150×100×160-B03
	MKUVE20..-KGT-N	WKL-150×100×160-B03
	MLF32..-ZR	WKL-100×100×150-B01
	MLF52..-ZR	WKL-150×100×160-B04
	MLF52..-E-ZR	WKL-200×200×200-B03
	MLF52..-EE-ZR	WKL-200×200×250-B03
	MKUVE25..-ZR	WKL-200×200×250-B05
	MKUSE25..-ZR	WKL-200×200×250-B05
	MKUSE25..-KGT	WKL-200×200×250-B05
	MKUVE25..-ZR	WKL-150×300×150-B01
	MKUVE25..-KGT	WKL-150×300×150-B01
MLFI140..-3ZR..-N MDKUVE15..-3ZR..-N	MLFI50..-C-ZR	WKL-150×100×160-B03
	MKUVE20..-ZR-N	WKL-150×100×160-B03
	MKUVE20..-KGT-N	WKL-150×100×160-B03
	MLF32..-ZR	WKL-100×100×150-B01
	MLF52..-ZR	WKL-150×150×150-B03
	MLF52..-E-ZR	WKL-200×200×200-B04
	MLF52..-EE-ZR	WKL-200×200×250-B03
	MKUVE25..-ZR	WKL-150×150×150-B03
	MKUSE25..-ZR	WKL-150×150×150-B03
	MKUSE25..-KGT	WKL-150×150×150-B03
	MKUVE25..-ZR	WKL-150×150×150-B01
	MKUVE25..-KGT	WKL-150×150×150-B01
	MLFI140..-3ZR..-N	WKL-200×200×200-B01
	MDKUVE15..-3ZR..-N	WKL-200×200×200-B01
MLFI200..-3ZR..-N MDKUVE25..-3ZR..-N MDKUSE25..-3ZR..-N MDKUVE25..-KGT..-N MDKUSE25..-KGT..-N	MKUVE25..-ZR	WKL-150×150×150-B11
	MKUSE25..-ZR	WKL-150×150×150-B11
	MKUSE25..-KGT	WKL-150×150×150-B11
	MKUVE25..-ZR	WKL-150×300×150-B01
	MKUVE25..-KGT	WKL-150×300×150-B01
	MLFI140..-3ZR..-N	WKL-175×175×90-B01
	MDKUVE15..-3ZR..-N	WKL-175×175×90-B01
	MLFI200..-3ZR..-N	WKL-300×400×300-B01
	MDKUVE25..-3ZR..-N	WKL-300×400×300-B01
	MDKUSE25..-3ZR..-N	WKL-300×400×300-B01
	MDKUVE25..-KGT..-N	WKL-300×400×300-B01
	MDKUSE25..-KGT..-N	WKL-300×400×300-B01

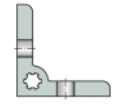

Mounting arrangement 2

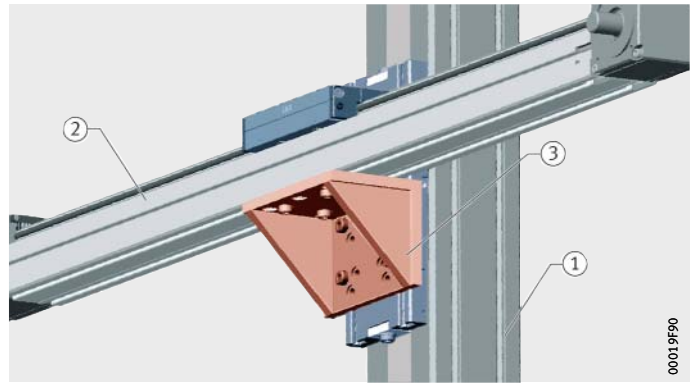

① Base actuator
② Combination actuator
③ Connecting bracket

Figure 5
Mounting arrangement 2
Allocation, see table

Mounting arrangement 2
Allocation, *Figure 5*

Base actuator	Combination actuator	Connecting bracket
MLFI25..-ZR	MLFI25..-ZR	WKL-75×150×75-B03
MLFI50..-C-ZR MKUVE20..-C-ZR..-N MKUVE20..-KGT..-N	MLFI25..-ZR	WKL-75×150×75-B03
	MLFI50..-C-ZR	WKL-150×100×200-B01
	MKUVE20..-C-ZR..-N	WKL-150×100×200-B01
	MKUVE20..-KGT..-N	WKL-150×100×200-B01
MLF32..-ZR	MLFI25..-ZR	WKL-75×150×75-B01
	MLFI50..-C-ZR	WKL-75×150×75-B02
	MKUVE20..-ZR-N/KGT	WKL-75×150×75-B02
	MLF32..-ZR	WKL-100×100×150-B01
MLF52..-ZR	MLFI25..-ZR	WKL-100×100×150-B04
	MLFI50..-C-ZR	WKL-100×100×150-B04
	MKUVE20..-C-ZR..-N	WKL-100×100×150-B04
	MKUVE20..-KGT..-N	WKL-100×100×150-B04
	MLF32..-ZR	WKL-100×100×150-B04
	MLF52..-ZR	WKL-150×150×150-B09
MLF52..-E-ZR	MLFI25..-ZR	WKL-150×150×150-B02
	MLFI50..-C-ZR	WKL-150×150×150-B02
	MKUVE20..-C-ZR..-N	WKL-150×150×150-B02
	MKUVE20..-KGT..-N	WKL-150×150×150-B02
	MLF32..-ZR	WKL-150×150×150-B02
	MLF52..-ZR	WKL-150×150×150-B07
	MLF52..-E-ZR	WKL-150×150×150-B07
MLF52..-EE-ZR	MLFI25..-ZR	WKL-150×150×150-B05
	MLFI50..-C-ZR	WKL-150×150×150-B06
	MKUVE20..-C-ZR..-N	WKL-150×150×150-B06
	MKUVE20..-KGT..-N	WKL-150×150×150-B06
	MLF32..-ZR	WKL-150×150×150-B06
	MLF52..-ZR	WKL-150×150×150-B09
	MLF52..-E-ZR	WKL-150×150×150-B09
	MLF52..-EE-ZR	WKL-150×150×150-B09
MKUVE25..-ZR MKUSE25..-ZR MKUSE25..-KGT	MLFI25..-ZR	WKL-100×100×150-B05
	MLFI50..-C-ZR	WKL-100×100×150-B05
	MKUVE20..-C-ZR-N	WKL-100×100×150-B05
	MKUVE20..-KGT..-N	WKL-100×100×150-B05
	MLF32..-ZR	WKL-100×100×150-B05

Mounting arrangement 2
Allocation, *Figure 5*
(continued)

Base actuator	Combination actuator	Connecting bracket
(continued) MKUVE25..-ZR MKUSE25..-ZR MKUSE25..-KGT	MLF52..-ZR	WKL-150×100×160-B09
	MLF52..-E-ZR	WKL-150×100×160-B09
	MLF52..-EE-ZR	WKL-150×100×160-B09
	MKUVE25..-ZR	WKL-150×100×160-B08
	MKUSE25..-ZR	WKL-150×100×160-B08
	MKUSE25..-KGT	WKL-150×100×160-B08
MKUVE25..-ZR..-N MKUSE25..-ZR..-N	MLFI25..-ZR	WKL-100×100×150-B03
	MLFI50..-C-ZR	WKL-150×100×160-B03
	MKUVE20..-C-ZR-N	WKL-150×100×160-B03
	MKUVE20..-KGT..-N	WKL-150×100×160-B03
	MLF32..-ZR	WKL-100×100×150-B01
	MLF52..-ZR	WKL-150×150×150-B01
	MLF52..-E-ZR	WKL-150×150×150-B01
	MLF52..-EE-ZR	WKL-150×150×150-B01
	MKUVE25..-ZR	WKL-150×300×150-B01
	MKUSE25..-ZR	WKL-150×300×150-B01
	MKUSE25..-KGT	WKL-150×300×150-B01
	MKUVE25..-ZR..-N	WKL-150×300×150-B01
	MKUSE25..-ZR..-N	WKL-150×300×150-B01
MLFI140..-3ZR..-N MDKUVE15..-3ZR..-N	MLFI50..-C-ZR	WKL-150×100×160-B03
	MKUVE20..-C-ZR-N	WKL-150×100×160-B03
	MKUVE20..-KGT..-N	WKL-150×100×160-B03
	MLF32..-ZR	WKL-100×100×150-B01
	MLF52..-ZR	WKL-150×150×150-B01
	MLF52..-E-ZR	WKL-150×150×150-B01
	MLF52..-EE-ZR	WKL-150×150×150-B01
	MKUVE25..-ZR	WKL-150×150×150-B01
	MKUSE25..-ZR	WKL-150×150×150-B01
	MKUSE25..-KGT	WKL-150×150×150-B01
	MKUVE25..-ZR..-N	WKL-150×150×150-B01
	MKUSE25..-ZR..-N	WKL-150×150×150-B01
	MLFI140..-3ZR..-N	WKL-200×200×200-B01
	MDKUVE15..-3ZR..-N	WKL-200×200×200-B01
MLFI200..-3ZR..-N MDKUVE25..-3ZR..-N MDKUSE25..-3ZR..-N MDKUVE25..-KGT..-N MDKUSE25..-KGT..-N	MKUVE25..-ZR	WKL-150×300×150-B01
	MKUSE25..-ZR	WKL-150×300×150-B01
	MKUSE25..-KGT	WKL-150×300×150-B01
	MKUVE25..-ZR..-N	WKL-150×300×150-B01
	MKUSE25..-ZR..-N	WKL-150×300×150-B01
	MLFI140..-3ZR..-N	WKL-175×175×90-B01
	MDKUVE15..-3ZR..-N	WKL-175×175×90-B01
	MLFI200..-3ZR..-N	WKL-300×400×300-B01
	MDKUVE25..-3ZR..-N	WKL-300×400×300-B01
	MDKUSE25..-3ZR..-N	WKL-300×400×300-B01
	MDKUVE25..-KGT..-N	WKL-300×400×300-B01
	MDKUSE25..-KGT..-N	WKL-300×400×300-B01

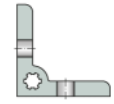

Mounting arrangement 3

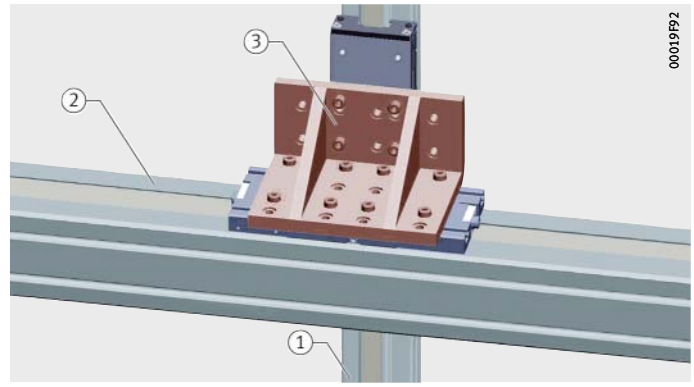

① Base actuator
② Combination actuator
③ Connecting bracket

Figure 6
Mounting arrangement 3
Allocation, see table

Mounting arrangement 3
Allocation, *Figure 6*

Base actuator	Combination actuator	Connecting bracket
MLFI25..-ZR	MLFI25..-ZR	WKL-75×150×75-B03
MLFI50..-C-ZR MKUVE20..-C-ZR..-N MKUVE20..-KGT..-N	MLFI25..-ZR	WKL-100×100×100-B01
	MLFI50..-C-ZR	WKL-150×100×200-B01
	MKUVE20..-C-ZR..-N	WKL-150×100×200-B01
	MKUVE20..-KGT..-N	WKL-150×100×200-B01
MLF32..-ZR	MLFI25..-ZR	WKL-100×100×150-B02
	MLFI50..-C-ZR	WKL-100×100×150-B02
	MKUVE20..-C-ZR..-N	WKL-100×100×150-B02
	MKUVE20..-KGT..-N	WKL-100×100×150-B02
	MLF32..-ZR	WKL-100×100×150-B01
MLF52..-ZR	MLFI25..-ZR	WKL-150×100×160-B05
	MLFI50..-C-ZR	WKL-150×100×160-B04
	MKUVE20..-C-ZR..-N	WKL-150×100×160-B04
	MKUVE20..-KGT..-N	WKL-150×100×160-B04
	MLF32..-ZR	WKL-150×100×160-B04
	MLF52..-ZR	WKL-150×150×150-B05
MLF52..-E-ZR	MLFI25..-ZR	WKL-150×100×200-B06
	MLFI50..-C-ZR	WKL-150×100×200-B07
	MKUVE20..-C-ZR..-N	WKL-150×100×200-B07
	MKUVE20..-KGT..-N	WKL-150×100×200-B07
	MLF32..-ZR	WKL-150×100×200-B06
	MLF52..-ZR	WKL-200×200×200-B03
	MLF52..-E-ZR	WKL-200×200×200-B04
MLF52..-EE-ZR	MLFI25..-ZR	WKL-200×200×250-B01
	MLFI50..-C-ZR	WKL-200×200×250-B03
	MKUVE20..-C-ZR..-N	WKL-200×200×250-B03
	MKUVE20..-KGT..-N	WKL-200×200×250-B03
	MLF32..-ZR	WKL-200×200×250-B01
	MLF52..-ZR	WKL-200×200×250-B04
	MLF52..-E-ZR	WKL-200×200×250-B04
	MLF52..-EE-ZR	WKL-200×200×250-B02
MKUVE25..-ZR MKUSE25..-ZR MKUSE25..-KGT	MLFI25..-ZR	WKL-150×150×150-B12
	MLFI50..-C-ZR	WKL-150×150×150-B12
	MKUVE20..-ZR..-N	WKL-150×150×150-B12
	MKUVE20..-KGT..-N	WKL-150×150×150-B12
	MLF32..-ZR	WKL-150×150×150-B11

Mounting arrangement 3
Allocation, *Figure 6*
(continued)

Base actuator	Combination actuator	Connecting bracket
(continued) MKUVE25..-ZR MKUSE25..-ZR MKUSE25..-KGT	MLF52..-ZR	WKL-200×200×250-B06
	MLF52..-E-ZR	WKL-150×150×150-B04
	MLF52..-EE-ZR	WKL-150×150×150-B10
	MKUVE25..-ZR	WKL-200×200×250-B06
	MKUSE25..-ZR	WKL-200×200×250-B06
	MKUSE25..-KGT	WKL-200×200×250-B06
MKUVE25..-ZR..-N MKUSE25..-ZR..-N	MLFI25..-ZR	WKL-150×100×200-B06
	MLFI50..-C-ZR	WKL-150×100×200-B01
	MKUVE20..-ZR..-N	WKL-150×100×200-B01
	MKUVE20..-KGT..-N	WKL-150×100×200-B01
	MLF32..-ZR	WKL-150×100×200-B02
	MLF52..-ZR	WKL-150×150×150-B09
	MLF52..-E-ZR	WKL-150×150×150-B07
	MLF52..-EE-ZR	WKL-150×150×150-B09
	MKUVE25..-ZR	WKL-150×100×160-B09
	MKUSE25..-ZR	WKL-150×100×160-B09
	MKUSE25..-KGT	WKL-150×100×160-B09
	MKUVE25..-ZR..-N	WKL-150×300×150-B01
	MKUSE25..-ZR..-N	WKL-150×300×150-B01
MLFI140..-3ZR..-N MDKUVE15..-3ZR..-N	MLFI50..-C-ZR	WKL-150×100×200-B01
	MKUVE20..-ZR..-N	WKL-150×100×200-B01
	MKUVE20..-KGT..-N	WKL-150×100×200-B01
	MLF32..-ZR	WKL-150×100×200-B02
	MLF52..-ZR	WKL-150×150×150-B09
	MLF52..-E-ZR	WKL-150×150×150-B07
	MLF52..-EE-ZR	WKL-150×150×150-B09
	MKUVE25..-ZR	WKL-200×200×250-B03
	MKUSE25..-ZR	WKL-200×200×250-B03
	MKUSE25..-KGT	WKL-200×200×250-B03
	MKUVE25..-ZR..-N	WKL-200×200×155-B02
	MKUSE25..-ZR..-N	WKL-200×200×155-B02
	MLFI140..-3ZR..-N	WKL-200×200×200-B01
	MDKUVE15..-3ZR..-N	WKL-200×200×200-B01
MLFI200..-3ZR..-N MDKUVE25..-3ZR..-N MDKUSE25..-3ZR..-N MDKUVE25..-KGT..-N MDKUSE25..-KGT..-N	MKUVE25..-ZR	WKL-200×200×250-B03
	MKUSE25..-ZR	WKL-200×200×250-B03
	MKUSE25..-KGT	WKL-200×200×250-B03
	MKUVE25..-ZR..-N	WKL-150×300×150-B01
	MKUSE25..-ZR..-N	WKL-150×300×150-B01
	MLFI140..-3ZR..-N	WKL-200×200×200-B01
	MDKUVE15..-3ZR..-N	WKL-200×200×200-B01
	MLFI200..-3ZR..-N	WKL-300×400×300-B01
	MDKUVE25..-3ZR..-N	WKL-300×400×300-B01
	MDKUSE25..-3ZR..-N	WKL-300×400×300-B01
	MDKUVE25..-KGT..-N	WKL-300×400×300-B01
	MDKUSE25..-KGT..-N	WKL-300×400×300-B01

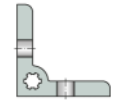

Mounting arrangement 4

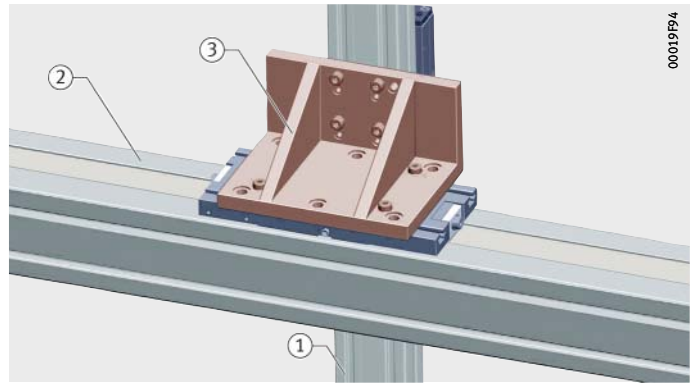

① Base actuator
② Combination actuator
③ Connecting bracket

Figure 7
Mounting arrangement 4
Allocation, see table

Mounting arrangement 4
Allocation, *Figure 7*

Base actuator	Combination actuator	Connecting bracket
MLFI25..-ZR	MLFI25..-ZR	WKL-75×150×75-B03
MLFI50..-C-ZR MKUVE20..-C-ZR..-N MKUVE20..-KGT-N	MLFI25..-ZR	WKL-100×100×100-B01
	MLFI50..-C-ZR	WKL-150×100×200-B01
	MKUVE20..-C-ZR-N	WKL-150×100×200-B01
	MKUVE20..-KGT-N	WKL-150×100×200-B01
MLF32..-ZR	MLFI25..-ZR	WKL-100×100×150-B02
	MLFI50..-C-ZR	WKL-100×100×150-B02
	MKUVE20..-C-ZR-N	WKL-100×100×150-B02
	MKUVE20..-KGT-N	WKL-100×100×150-B02
	MLF32..-ZR	WKL-100×100×100-B01
MLF52..-ZR	MLFI25..-ZR	WKL-150×100×160-B05
	MLFI50..-C-ZR	WKL-150×100×160-B04
	MKUVE20..-C-ZR-N	WKL-150×100×160-B04
	MKUVE20..-KGT-N	WKL-150×100×160-B04
	MLF32..-ZR	WKL-150×100×160-B04
	MLF52-130..-ZR	WKL-150×100×160-B04
MLF52..-E-ZR	MLFI25..-ZR	WKL-150×100×200-B06
	MLFI50..-C-ZR	WKL-150×100×200-B07
	MKUVE20..-C-ZR-N	WKL-150×100×200-B07
	MKUVE20..-KGT-N	WKL-150×100×200-B07
	MLF32..-ZR	WKL-150×100×200-B07
	MLF52-130..-ZR	WKL-200×200×155-B03
	MLF52-145..-ZR	WKL-200×200×155-B03
MLF52..-EE-ZR	MLFI25..-ZR	WKL-200×200×250-B01
	MLFI50..-C-ZR	WKL-200×200×250-B03
	MKUVE20..-C-ZR-N	WKL-200×200×250-B03
	MKUVE20..-KGT-N	WKL-200×200×250-B03
	MLF32..-ZR	WKL-200×200×250-B02
	MLF52..-ZR	WKL-200×200×250-B03
	MLF52..-E-ZR	WKL-200×200×250-B03
	MLF52..-EE-ZR	WKL-200×200×250-B03
MKUVE25..-ZR MKUSE25..-ZR MKUSE25..-ZR	MLFI25..-ZR	WKL-150×150×150-B12
	MLFI50..-C-ZR	WKL-150×150×150-B12
	MKUVE20..-ZR-N	WKL-150×150×150-B12
	MKUVE20..-KGT-N	WKL-150×150×150-B12
	MLF32..-ZR	WKL-150×150×150-B12

Mounting arrangement 4
Allocation, *Figure 7*
(continued)

Base actuator	Combination actuator	Connecting bracket
(continued) MKUVE25..-ZR MKUSE25..-ZR MKUSE25..-ZR	MLF52..-ZR	WKL-150×100×160-B04
	MLF52..-E-ZR	WKL-150×100×160-B04
	MLF52..-EE-ZR	WKL-150×100×160-B04
	MKUSE25..-ZR	WKL-150×100×160-B04
	MKUSE25..-KGT	WKL-150×100×160-B04
MKUVE25..-ZR-N MKUSE20..-ZR-N	MLFI25..-ZR	WKL-150×100×200-B06
	MLFI50..-C-ZR	WKL-150×100×200-B01
	MKUVE20..-ZR-N	WKL-150×100×200-B01
	MKUVE20..-KGT-N	WKL-150×100×200-B01
	MLF32..-ZR	WKL-150×100×200-B07
	MLF52..-ZR	WKL-150×300×150-B01
	MLF52..-E-ZR	WKL-150×300×150-B01
	MLF52..-EE-ZR	WKL-150×300×150-B01
	MKUSE25..-ZR	WKL-150×300×150-B01
	MKUSE25..-KGT	WKL-150×300×150-B01
	MKUVE25..-ZR-N	WKL-150×300×150-B01
	MKUVE25..-KGT-N	WKL-150×300×150-B01
MLFI140..-3ZR..-N MDKUVE15..-3ZR..-N	MLFI50..-C-ZR	WKL-150×100×200-B01
	MKUVE20..-ZR-N	WKL-150×100×200-B01
	MKUVE20..-KGT-N	WKL-150×100×200-B01
	MLF32..-ZR	WKL-200×200×155-B02
	MLF52..-ZR	WKL-200×200×155-B02
	MLF52..-E-ZR	WKL-200×200×155-B02
	MLF52..-EE-ZR	WKL-200×200×155-B02
	MKUSE25..-ZR	WKL-200×200×155-B02
	MKUSE25..-KGT	WKL-200×200×155-B02
	MKUVE25..-ZR	WKL-200×200×155-B02
	MKUVE25..-KGT	WKL-200×200×155-B02
	MLFI140-3ZR	WKL-200×200×200-B01
	MDKU(V)E15..-3ZR	WKL-200×200×200-B01
MLFI200..-3ZR..-N MDKUVE25..-3ZR..-N MDKUSE25..-3ZR..-N MDKUVE25..-KGT..-N MDKUSE25..-KGT..-N	MKUVE25..-ZR	WKL-150×300×150-B01
	MKUSE25..-ZR	WKL-150×300×150-B01
	MKUSE25..-KGT	WKL-150×300×150-B01
	MKUVE25..-ZR	WKL-150×300×150-B01
	MKUVE25..-KGT	WKL-150×300×150-B01
	MLFI140..-3ZR..-N	WKL-175×175×90-B01
	MDKUVE15..-3ZR..-N	WKL-175×175×90-B01
	MLFI200..-3ZR..-N	WKL-300×400×300-B01
	MDKUVE25..-3ZR..-N	WKL-300×400×300-B01
	MDKUSE25..-3ZR..-N	WKL-300×400×300-B01
	MDKUVE25..-KGT..-N	WKL-300×400×300-B01
	MDKUSE25..-KGT..-N	WKL-300×400×300-B01

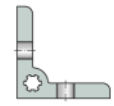

Mounting arrangement 5

① Base actuator
② Combination actuator
③ Connecting bracket

Figure 8
Mounting arrangement 5
Allocation, see table

Mounting arrangement 5
Allocation, *Figure 8*

Base actuator	Combination actuator	Connecting bracket
MLFI25..-ZR	MLFI25..-ZR	WKL-75×150×75-B03
MLFI50..-C-ZR MKUVE20..-C-ZR..-N MKUVE20..-KGT-N	MLFI25..-ZR	WKL-75×150×75-B03
	MLFI50..-C-ZR	WKL-150×100×200-B01
	MKUVE20..-C-ZR-N	WKL-150×100×200-B01
	MKUVE20..-KGT-N	WKL-150×100×200-B01
MLF32..-ZR	MLFI25..-ZR	WKL-75×150×75-B01
	MLFI50..-C-ZR	WKL-75×150×75-B02
	MKUVE20..-C-ZR-N	WKL-75×150×75-B02
	MKUVE20..-KGT-N	WKL-75×150×75-B02
	MLF32..-ZR	WKL-100×100×150-B01
MLF52..-ZR	MLFI25..-ZR	WKL-100×100×150-B03
	MLFI50..-C-ZR	WKL-100×100×150-B03
	MKUVE20..-C-ZR-N	WKL-100×100×150-B03
	MKUVE20..-KGT-N	WKL-100×100×150-B03
	MLF32..-ZR	WKL-100×100×150-B01
	MLF52..-ZR	WKL-150×100×160-B03
MLF52..-E-ZR	MLFI25..-ZR	WKL-100×100×150-B03
	MLFI50..-C-ZR	WKL-100×100×150-B03
	MKUVE20..-C-ZR-N	WKL-100×100×150-B03
	MKUVE20..-KGT-N	WKL-100×100×150-B03
	MLF32..-ZR	WKL-100×100×150-B01
	MLF52..-E-ZR	WKL-150×100×160-B03
	MLF52..-EE-ZR	WKL-200×200×200-B03
MLF52..-EE-ZR	MLFI25..-ZR	WKL-100×100×150-B03
	MLFI50..-C-ZR	WKL-100×100×150-B03
	MKUVE20..-C-ZR-N	WKL-100×100×150-B03
	MKUVE20..-KGT-N	WKL-100×100×150-B03
	MLF32..-ZR	WKL-100×100×150-B01
	MLF52..-ZR	WKL-150×100×160-B03
	MLF52..-E-ZR	WKL-200×200×200-B03
	MLF52..-EE-ZR	WKL-200×200×250-B03
MKUVE25..-ZR MKUSE25..-ZR MKUSE25..-KGT	MLFI25..-ZR	WKL-100×100×150-B03
	MLFI50..-C-ZR	WKL-150×100×160-B03
	MKUVE20..-ZR-N	WKL-150×100×160-B03
	MKUVE20..-KGT-N	WKL-150×100×160-B03
	MLF32..-ZR	WKL-100×100×150-B01

Mounting arrangement 5
Allocation, *Figure 8*
(continued)

Base actuator	Combination actuator	Connecting bracket
(continued) MKUVE25..-ZR MKUSE25..-ZR MKUSE25..-KGT	MLF52..-ZR	WKL-150×100×160-B03
	MLF52..-E-ZR	WKL-200×200×200-B03
	MLF52..-EE-ZR	WKL-200×200×250-B03
	MKUVE25..-ZR	WKL-150×100×160-B04
	MKUSE25..-ZR	WKL-150×100×160-B04
	MKUSE25..-KGT	WKL-150×100×160-B04
MKUVE25..-ZR-N MKUSE20..-ZR-N	MLFI25..-ZR	WKL-100×100×150-B03
	MLFI50..-C-ZR	WKL-150×100×160-B03
	MKUVE20..-ZR-N	WKL-150×100×160-B03
	MKUVE20..-KGT-N	WKL-150×100×160-B03
	MLF32..-ZR	WKL-100×100×150-B01
	MLF52..-ZR	WKL-150×100×160-B03
	MLF52..-E-ZR	WKL-200×200×200-B03
	MLF52..-EE-ZR	WKL-200×200×250-B03
	MKUVE25..-ZR	WKL-200×200×250-B05
	MKUSE25..-ZR	WKL-200×200×250-B05
	MKUSE25..-KGT	WKL-200×200×250-B05
	MKUVE25..-ZR	WKL-150×300×150-B11
	MKUVE25..-KGT	WKL-150×300×150-B11
MLFI140..-3ZR..-N MDKUVE15..-3ZR..-N	MLFI50..-C-ZR	WKL-150×100×160-B03
	MKUVE20..-ZR-N	WKL-150×100×160-B03
	MKUVE20..-KGT-N	WKL-150×100×160-B03
	MLF32..-ZR	WKL-100×100×150-B01
	MLF52..-ZR	WKL-150×150×150-B03
	MLF52..-E-ZR	WKL-200×200×200-B04
	MLF52..-EE-ZR	WKL-200×200×250-B02
	MKUVE25..-ZR	WKL-150×150×150-B03
	MKUSE25..-ZR	WKL-150×150×150-B03
	MKUSE25..-KGT	WKL-150×150×150-B03
	MKUVE25..-ZR	WKL-175×175×90-B01
	MKUVE25..-KGT	WKL-175×175×90-B01
	MLFI140..-3ZR..-N	WKL-200×200×200-B01
	MDKUVE15..-3ZR..-N	WKL-200×200×200-B01
MLFI200..-3ZR..-N MDKUVE25..-3ZR..-N MDKUSE25..-3ZR..-N MDKUVE25..-KGT..-N MDKUSE25..-KGT..-N	MKUVE25..-ZR	WKL-200×200×250-B04
	MKUSE25..-ZR	WKL-200×200×250-B04
	MKUSE25..-KGT	WKL-200×200×250-B04
	MKUVE25..-ZR	WKL-150×300×150-B02
	MKUVE25..-KGT	WKL-150×300×150-B02
	MLFI140..-3ZR..-N	WKL-175×175×90-B01
	MDKUVE15..-3ZR..-N	WKL-175×175×90-B01
	MLFI200..-3ZR..-N	WKL-300×400×300-B01
	MDKUVE25..-3ZR..-N	WKL-300×400×300-B01
	MDKUSE25..-3ZR..-N	WKL-300×400×300-B01
	MDKUVE25..-KGT..-N	WKL-300×400×300-B01
	MDKUSE25..-KGT..-N	WKL-300×400×300-B01

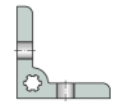

Mounting arrangement 6

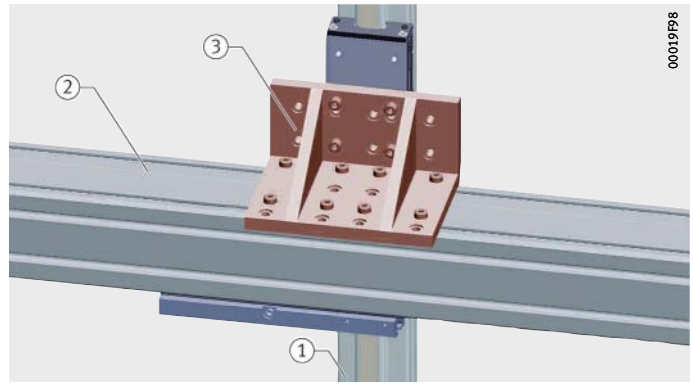

① Base actuator
② Combination actuator
③ Connecting bracket

Figure 9
Mounting arrangement 6
Allocation, see table

Mounting arrangement 6
Allocation, *Figure 9*

Base actuator	Combination actuator	Connecting bracket
MLFI25..-ZR	MLFI25..-ZR	WKL-75×150×75-B03
MLFI50..-C-ZR MKUVE20..-C-ZR..-N MKUVE20..-KGT-N	MLFI25..-ZR	WKL-100×100×100-B01
	MLFI50..-C-ZR	WKL-150×100×200-B01
	MKUVE20..-C-ZR-N	WKL-150×100×200-B01
	MKUVE20..-KGT-N	WKL-150×100×200-B01
MLF32..-ZR	MLFI25..-ZR	WKL-100×100×150-B02
	MLFI50..-C-ZR	WKL-100×100×150-B01
	MKUVE20..-C-ZR-N	WKL-100×100×150-B01
	MKUVE20..-KGT-N	WKL-100×100×150-B01
	MLF32..-ZR	WKL-100×100×150-B01
MLFI52..-ZR	MLFI25..-ZR	WKL-75×150×75-B01
	MLFI50..-C-ZR	WKL-150×100×200-B01
	MKUVE20..-C-ZR-N	WKL-150×100×200-B01
	MKUVE20..-KGT-N	WKL-150×100×200-B01
	MLF32..-ZR	WKL-150×100×200-B02
	MLFI52..-ZR	WKL-150×150×150-B09
MLFI52..-E-ZR	MLFI25..-ZR	WKL-75×150×75-B01
	MLFI50..-C-ZR	WKL-150×100×200-B01
	MKUVE20..-C-ZR-N	WKL-150×100×200-B01
	MKUVE20..-KGT-N	WKL-150×100×200-B01
	MLF32..-ZR	WKL-150×100×200-B02
	MLFI52..-ZR	WKL-150×150×150-B09
	MLFI52..-E-ZR	WKL-150×150×150-B07
MLFI52..-EE-ZR	MLFI25..-ZR	WKL-75×150×75-B01
	MLFI50..-C-ZR	WKL-150×100×200-B01
	MKUVE20..-C-ZR-N	WKL-150×100×200-B01
	MKUVE20..-KGT-N	WKL-150×100×200-B01
	MLF32..-ZR	WKL-150×100×200-B02
	MLFI52..-ZR	WKL-150×150×150-B09
	MLFI52..-E-ZR	WKL-150×150×150-B07
	MLFI52..-EE-ZR	WKL-150×150×150-B09
MKUVE25..-ZR MKUSE25..-ZR	MLFI25..-ZR	WKL-150×100×200-B06
	MLFI50..-C-ZR	WKL-150×100×200-B01
	MKUVE20..-ZR-N	WKL-150×100×200-B01
	MKUVE20..-KGT-N	WKL-150×100×200-B01
	MLF32..-ZR	WKL-150×100×200-B02

Mounting arrangement 6
Allocation, *Figure 9*
(continued)

Base actuator	Combination actuator	Connecting bracket
(continued) MKUVE25..-ZR MKUSE25..-ZR	MLF52..-ZR	WKL-150×150×150-B09
	MLF52..-E-ZR	WKL-150×150×150-B07
	MLF52..-EE-ZR	WKL-150×150×150-B09
	MKUVE25..-ZR	WKL-150×100×160-B08
	MKUSE25..-ZR	WKL-150×100×160-B08
	MKUSE25..-KGT	WKL-150×100×160-B08
MKUVE25..-ZR-N MKUSE20..-ZR-N	MLFI25..-ZR	WKL-150×100×200-B06
	MLFI50..-C-ZR	WKL-150×100×200-B01
	MKUVE20..-ZR-N	WKL-150×100×200-B01
	MKUVE20..-KGT-N	WKL-150×100×200-B01
	MLF32..-ZR	WKL-150×100×200-B02
	MLF52-130..-ZR	WKL-150×150×150-B09
	MLF52-145..-ZR	WKL-150×150×150-B07
	MLF52-155..-ZR	WKL-150×150×150-B09
	MKUVE25..-ZR	WKL-150×100×160-B09
	MKUSE25..-ZR	WKL-150×100×160-B09
	MKUSE25..-KGT	WKL-150×100×160-B09
	MKUVE25..-ZR	WKL-150×300×150-B01
	MKUVE25..-KGT	WKL-150×300×150-B01
MLFI140..-3ZR..-N MDKUVE15..-3ZR..-N	MLFI50..-C-ZR	WKL-150×100×200-B01
	MKUVE20..-ZR-N	WKL-150×100×200-B01
	MKUVE20..-KGT-N	WKL-150×100×200-B01
	MLF32..-ZR	WKL-150×100×200-B02
	MLF52..-ZR	WKL-150×150×150-B09
	MLF52..-E-ZR	WKL-150×150×150-B07
	MLF52..-EE-ZR	WKL-150×150×150-B09
	MKUVE25..-ZR	WKL-200×200×250-B03
	MKUSE25..-ZR	WKL-200×200×250-B03
	MKUSE25..-KGT	WKL-200×200×250-B03
	MKUVE25..-ZR	WKL-200×200×155-B02
	MKUVE25..-KGT	WKL-200×200×155-B02
	MLFI140..-3ZR..-N	WKL-200×200×200-B01
	MDKUVE15..-3ZR..-N	WKL-200×200×200-B01
MLFI200..-3ZR..-N MDKUVE25..-3ZR..-N MDKUSE25..-3ZR..-N MDKUVE25..-KGT..-N MDKUSE25..-KGT..-N	MKUVE25..-ZR	WKL-200×200×250-B06
	MKUSE25..-ZR	WKL-200×200×250-B06
	MKUSE25..-KGT	WKL-200×200×250-B06
	MKUVE25..-ZR	WKL-150×300×150-B02
	MKUVE25..-KGT	WKL-150×300×150-B02
	MLFI140..-3ZR..-N	WKL-200×200×200-B01
	MDKUVE15..-3ZR..-N	WKL-200×200×200-B01
	MLFI200..-3ZR..-N	WKL-300×400×300-B01
	MDKUVE25..-3ZR..-N	WKL-300×400×300-B01
	MDKUSE25..-3ZR..-N	WKL-300×400×300-B01
	MDKUVE25..-KGT..-N	WKL-300×400×300-B01
	MDKUSE25..-KGT..-N	WKL-300×400×300-B01

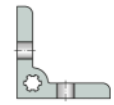

Fixing brackets WKL

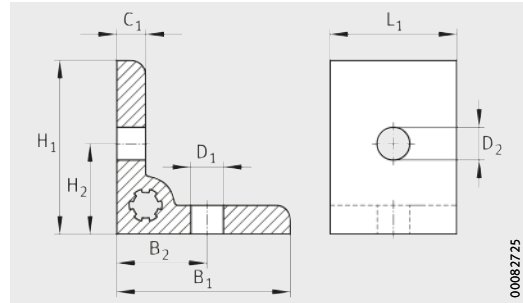

WKL-48×48×35

Dimension table · Dimensions in mm

Designation	Mass	Dimensions									
	m ≈kg	A_1, A_2	A_3, A_4	B_1, H_1	B_2, H_2	B_3, H_3	C_1	C_2	D_1, D_2, D_3	D_4, D_5	L_1
WKL-48×48×35	0,065	–	–	48	25	–	8	–	9	–	35
WKL-65×65×35	0,085	–	–	65	25	50	5	4,5	9	15	35
WKL-65×65×30-N	0,06	40	5,5	65	15	–	5	–	–	–	30
WKL-65×65×35-N	0,065	40	9	65	15	–	5	–	–	–	35
WKL-90×90×35-N	0,130	55	9	90	20	–	7	–	–	–	35
WKL-98×98×35	0,185	–	–	98	25	75	7	7	9	–	35

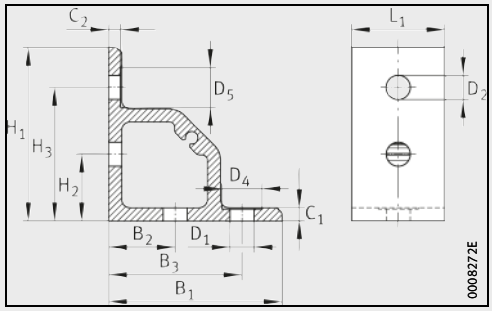

WKL-65×65×35

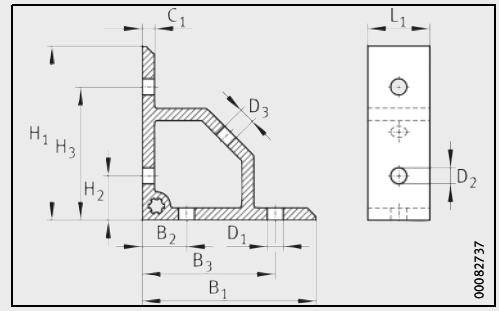

WKL-98×98×35

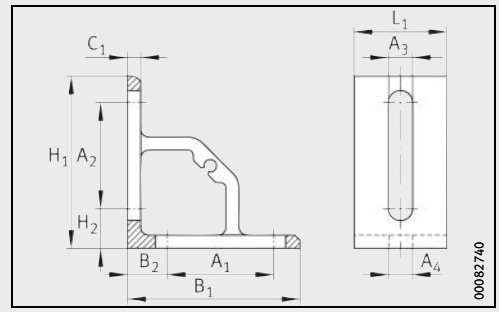

WKL..-N

Connecting brackets for linear actuators

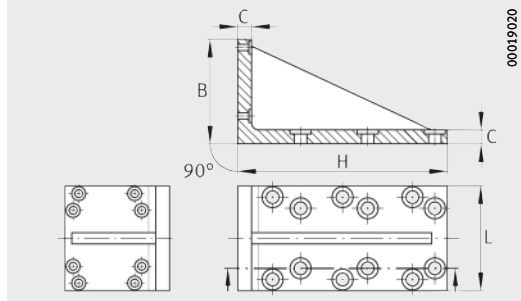

Bracket 1

Dimension table · Dimensions in mm

Designation	Bracket[1)]	Mass m ≈kg	Dimensions B	C	H	L	Possible hole patterns
WKL-75×150×75	1	0,52	75	10	150	75	B01 – B03
WKL-100×100×100	4	0,73	100	10	100	100	B01
WKL-100×100×150	4	0,98	100	10	100	150	B01 – B05
WKL-150×100×160	5	1,89	150	15	100	160	B03 – B05, B08, B09
WKL-150×100×200	3	2,27	150	15	100	200	B01 – B02, B06, B07
WKL-150×150×150	3	2,41	150	18	150	150	B01 – B12
WKL-150×300×150	2	3,85	150	18	300	150	B01 – B02
WKL-175×175×90	1	1,64	175	15	175	90	B01
WKL-200×200×155	5	4	200	22	200	155	B02
WKL-200×200×200	3	5,1	200	22	200	200	B01, B03, B04
WKL-200×200×250	4	6,8	200	20	200	250	B01 – B06
WKL-300×400×300	3	19,5	300	30	400	300	B01

1) Bracket: see Figures 1 to 5.

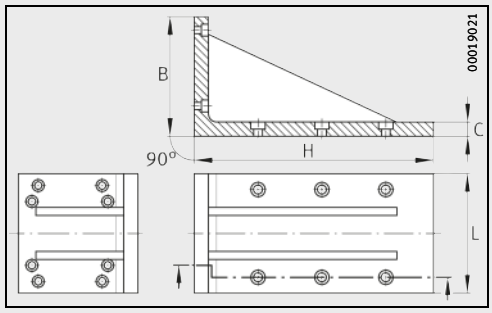

Bracket 2

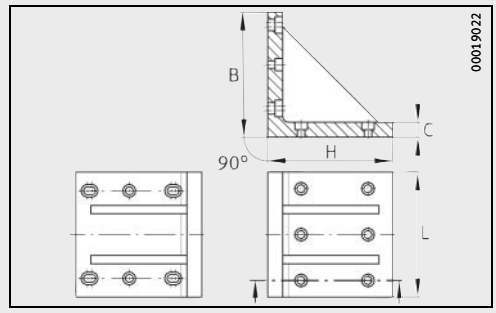

Bracket 3

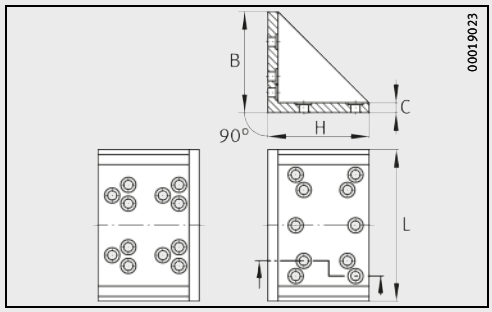

Bracket 4

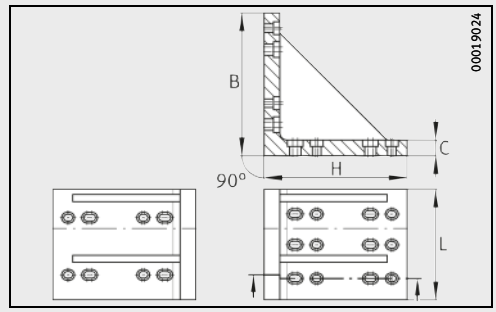

Bracket 5

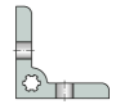

Clamping lugs

SPPR

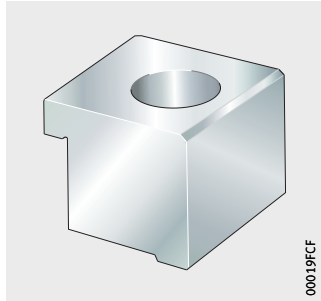

Clamping lugs

Features

Clamping lugs, *Figure 1*, are the best option for mounting the support rails and carriage units on the adjacent construction. Where possible, clamping lugs should be used in preference to fixing brackets for mounting the support rails of linear actuators.

Clamping lugs are made from a high strength aluminium alloy and are anodised on all faces. Clamping lugs are supplied without fixing screws or fixing nuts.

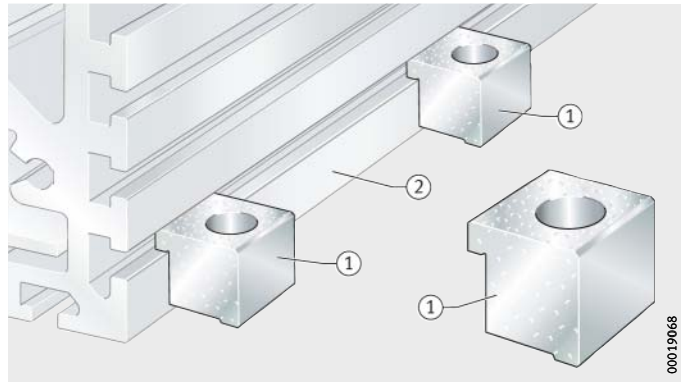

① Clamping lug SPPR
② Support rail

Figure 1
Clamping lug

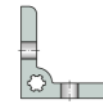

Clamping lugs

Clamping lugs for mounting of support rails

When clamping lugs are used to mount a support rail on the adjacent construction, the maximum spacings must be observed.
The maximum spacings are valid where a horizontal mounting position is used and where the support rail is fully supported.
For other mounting positions, please consult us.

The maximum spacing of clamping lugs in the case of linear actuators and clamping actuators is 500 mm, while in the case of tandem actuators it is 250 mm. The hole pattern must be defined in the design, *Figure 2*, *Figure 3* and table, page 831. The maximum tightening torques for fixing screws must be taken into consideration, see table, page 831.

If heavy load conditions are present or actuators are mounted in an overhead arrangement, the use and quantity of clamping lugs must be checked; in such cases, please consult us.

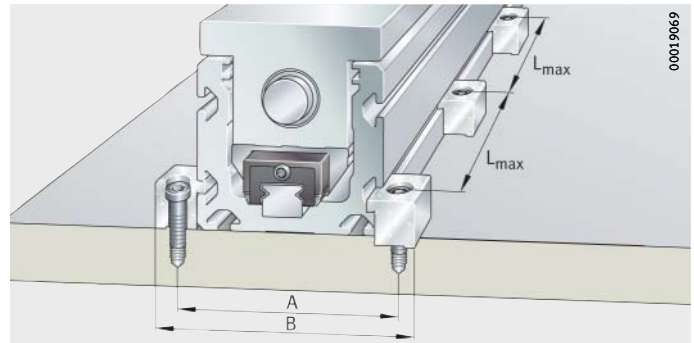

A = hole spacing
B = total width
L_{max} = 500 mm

Figure 2
Maximum spacing of clamping lugs for linear actuators and clamping actuators

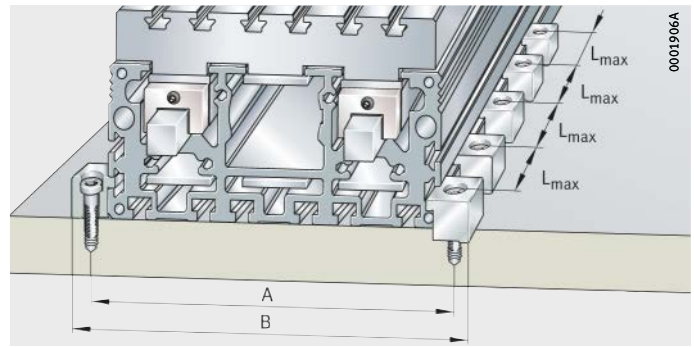

A = hole spacing
B = total width
L_{max} = 250 mm

Figure 3
Maximum spacing of clamping lugs for tandem actuators

Mounting spacing of clamping lugs on support rails

Actuator	Clamping lug	Hole spacing A mm	Total width B mm	Fixing screw to ISO 4762..8.8
MLF32..-ZR MKLF32..-ZR	SPPR-28×30	100	125	M8
MLF52..-ZR MKLF52..-ZR	SPPR-28×30	137	162	M8
MLFI20..-ZR	SPPR-12×20	60	74	M6
MLFI25..-ZR..-N	SPPR-24×20	73	88	M6
MLFI34..-ZR MKUVE15..-ZR MKUVE15..-KGT..-N	SPPR-24×20	80	95	M6
MLFI50..-C-ZR MKUVE20..-C-ZR..-N MKKUSE20..-ZR-N MKUVE20..-KGT..-N MKKUVE20..-KGT..-N	SPPR-23×30	113	138	M8
MKUVE25..-ZR-N MKUSE25..-ZR-N MKUSE25..-KGT..-N	SPPR-28×30	137	162	M8
MLFI140..-3ZR-N MDKUVE15..-3ZR-N MDKUVE15..-KGT..-N	SPPR-28×30	205	230	M8
MLFI200..-3ZR-N MDKUVE25..-3ZR-N MDKUSE25..-3ZR-N MDKUVE25..-KGT..-N MDKUSE25..-KGT..-N	SPPR-28×30	285	310	M8
MDKUVE35..-3ZR-N MDKUVE35..-KGT..-N	SPPR-34×36	444	472,5	M12
MKUVS32..-KGT	SPPR-12×20	100	114	M6
MSDKUVE15..-KGT	SPPR-12×30	155	169	M6
MTKUSE25..-ZS	SPPR-28×30	195	220	M8

Maximum tightening torques of fixing screws

Fixing screw to ISO 4762, grade 8.8	Tightening torque Nm
M5	5,5
M6	9,5
M8	23
M12	60

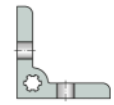

Clamping lugs

Clamping lugs for mounting of carriage unit

Clamping lugs can also be used to mount the stationary carriage unit on the adjacent construction. This applies to actuators with monorail guidance system and ball screw drive (with the exception of MKUSE25..-KGT and MDKUVE25..-3ZR), *Figure 4*. In this case, maximum spacings apply.

Before the spacings of the clamping lugs for location of the carriage unit are determined, it must be checked how many clamping lugs are required in order to support the load. If necessary, additional means of location must be provided. The hole pattern must be defined in the design. The maximum tightening torques for fixing screws must be taken into consideration, see table, page 831.

① Clamping lug
② Carriage unit

A = hole spacing
B = total width

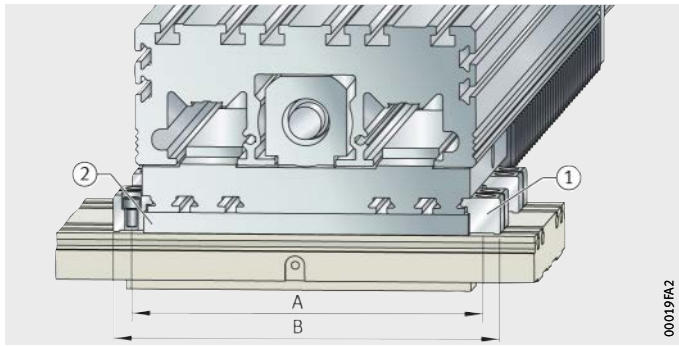

Figure 4
Location of the carriage unit directly on the adjacent construction

Mounting spacings for clamping lugs on carriage unit

Actuator	Clamping lug	Hole spacing A mm	Total width B mm	Fixing screw to ISO 4762..8.8
MKUVE15..-KGT..-N	SPPR-10,5×20	80	97	M5
MKUVE20..-KGT..-N MKKUVE20..-KGT..-N	SPPR-13,5×20	103	120	M6
MDKUVE15..-KGT..-N	SPPR-22×20	193	210	M6
MDKUVE25..-KGT..-N MDKUSE25..-KGT..-N	SPPR-26×30	275	300	M8
MDKUVE35..-KGT..-N	SPPR-31×30	435	460	M8

Multi-axis arrangement

Where actuators are used in the construction of multi-axis systems, clamping lugs are suitable for mounting of the actuators, *Figure 5*.

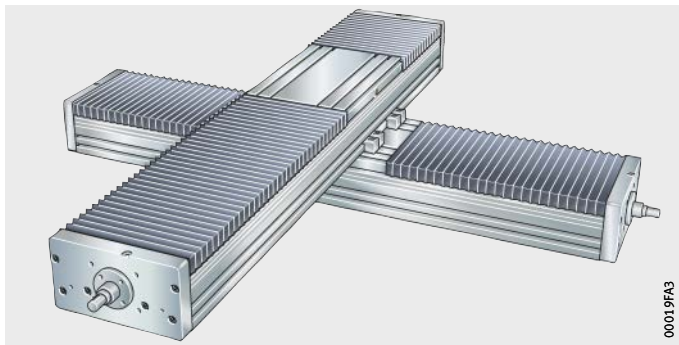

Figure 5
Clamping lug as connector

Clamping lugs

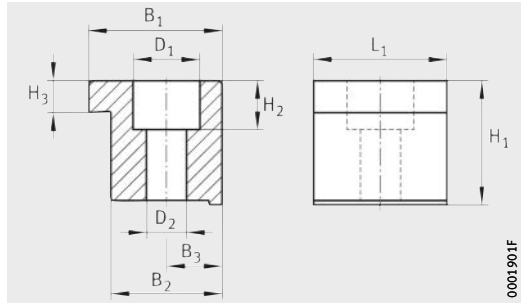

Clamping lugs SPPR

Dimension table · Dimensions in mm

Designation	Mass	Dimensions								
	m ≈kg	B_1	B_2	B_3	D_1 ∅	D_2 ∅	H_1	H_2	H_3	L_1
SPPR-10,5×20	0,009	20	17	8,5	9	5,5	10,5	6	3,85	20
SPPR-12×20	0,008	20	15	7	11	7	12	5,5	8	20
SPPR-13,5×20	0,01	20	17	8,5	11	6,6	13,5	7	3,85	20
SPPR-22×20	0,02	22	17	8,5	11	6,6	22	7	4,7	20
SPPR-24×20	0,017	20	15	7,5	11	6,6	24	6,8	4,4	20
SPPR-23×30	0,03	30	25	12,5	15	9	23	11	7,2	30
SPPR-26×30	0,05	30	25	12,5	15	9	26	11	7,2	30
SPPR-28×30	0,051	30	25	12,5	15	9	28	11	7,2	30
SPPR-31×30	0,06	30	25	12,5	15	9	31	11	7,2	30
SPPR-34×36	0,07	36	28,5	14,25	20	13,5	33,5	14,5	8,9	34

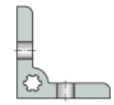

T-nuts
T-bolts

MU

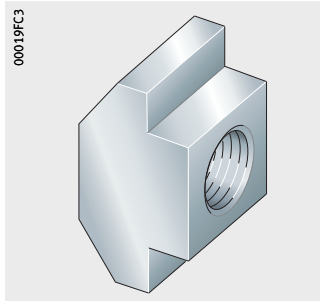

SHR

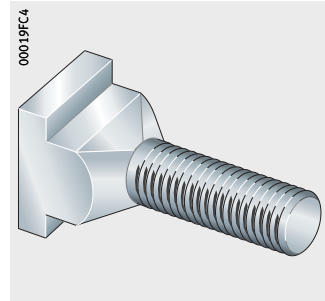

Rotatable T-nuts
Positionable T-nuts

MU..-RHOMBUS

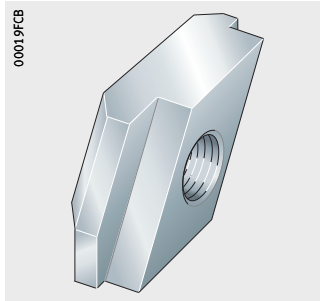

MU..-POS

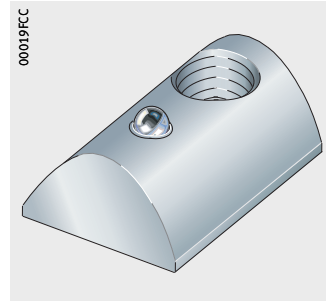

T-strips
Connector set

LEIS

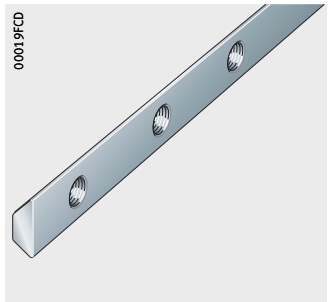

VBS

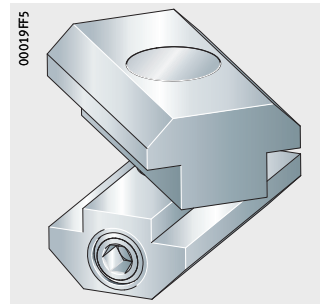

Slot closing strip

NAD

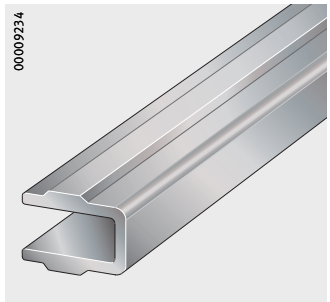

Fasteners

Features

Fasteners are fitted in the slots in support rails and carriage units for mounting of accessories on the linear actuators or for fixing linear actuators to the adjacent construction.

T-nuts MU

T-nuts are made from bright quenched and tempered steel of grade 8 or from corrosion-resistant steel, *Figure 1*. T-nuts have an internal thread. They are inserted in the slots via the filling openings or the end faces.

T-nuts are supplied without screws.

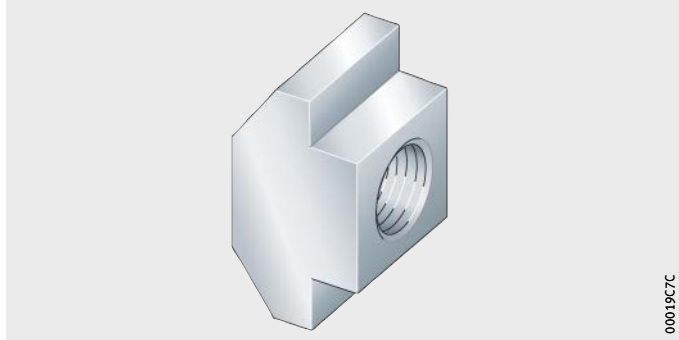

Figure 1
T-nut MU

T-bolts SHR

T-bolts are made from quenched and tempered steel of grade 8.8, *Figure 2*. They are inserted in the slots via the filling openings or the end faces.

T-bolts are supplied without nuts and washers.

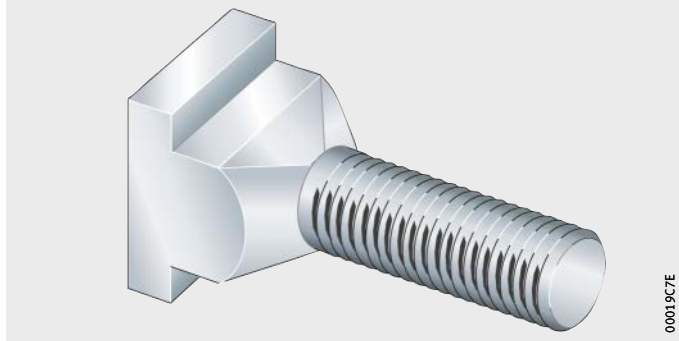

Figure 2
T-bolt SHR

Rotatable T-nuts MU..-RHOMBUS

Rotatable T-nuts can be used for mounting of accessories on the support rail or carriage unit. Rotatable T-nuts are made from quenched and tempered steel.

These T-nuts can be fitted by rotation at any point in the slot, *Figure 3*. A filling opening is not necessary and there is no need for access to the end faces of the slots.

Rotatable T-nuts are supplied without screws.

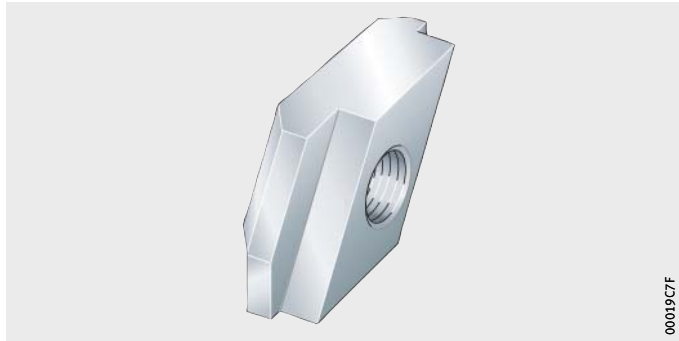

Figure 3
Rotatable T-nut
MU..-RHOMBUS

Positionable T-nut MU..-POS

Positionable T-nuts can be used for mounting of accessories on the support rail or carriage unit. The T-nut is held in place by means of a ball that is pressed against the slot wall by a spring. Positionable T-nuts are made from zinc-plated steel.

These T-nuts can be fitted by tilting at any point in the slot, *Figure 4*. A filling opening is not necessary and there is no need for access to the end faces of the slots.

Positionable T-nuts are supplied without screws.

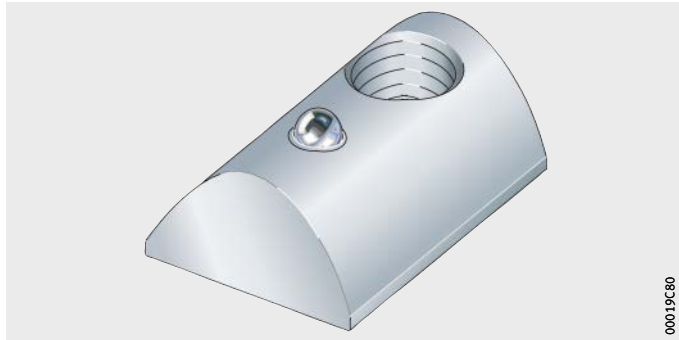

Figure 4
Positionable T-nut
MU..-POS

Hexagon nuts

Conventional hexagon nuts can be used for the mounting of accessories on the support rail or carriage unit.

T-strips LEIS

T-strips can be used for fixing support rails or carriage units to the adjacent construction and for mounting of accessories on the support rail or carriage unit.

These T-strips have threaded holes arranged with a uniform pitch, *Figure 5*. The hole pattern in the adjacent construction must be matched to this pitch.

The T-strips are made from profiled steel or from aluminium. Some designs are slid into the slot via the end face. Other designs can be fitted in the slot by means of tilting on their longitudinal side.

In comparison with T-nuts, T-strips have the following advantages:

- Handling of fasteners during mounting is simplified
- Time can be saved during mounting since there is no need for individual alignment of the fasteners
- The contact pressure in the slot is lower than for T-nuts or T-bolts under the same screw tightening torque, since the clamping force is distributed over a larger area.

Figure 5
T-strip LEIS

Connector sets VBS

Connector sets can be used to connect linear actuators with each other. Connector sets are available for actuators with 8 mm and 10 mm slots.

A connector set comprises an upper part and lower part that are slid into the T-slots, *Figure 6*. These two parts are connected by a pin and a grub screw. When tightened, the grub screws are pressed into a cone. This causes clamping of the connection.

Connector sets can be used to connect linear actuators with each other in any angular position. The sets can be moved and aligned retrospectively.

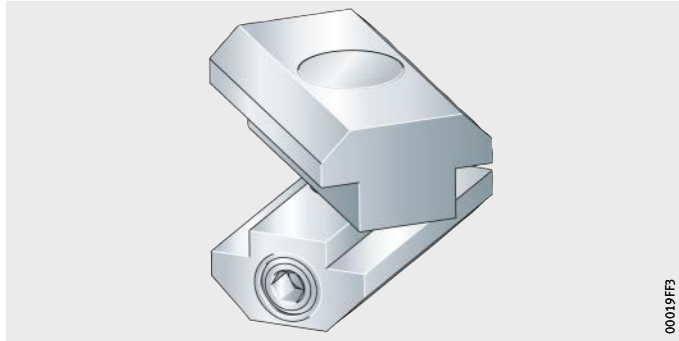

Figure 6
Connector set VBS

Slot closing strips NAD

Slot closing strips are used to protect the slots in support rails and carriage units against liquids and contaminants, *Figure 7*. The slot closing strips give a clear, smooth structure especially on visible surfaces.

Slot closing strips are made from plastic and rubber. They are pressed into the slot. Slot closing strips are supplied in pieces with a length of 2 m.

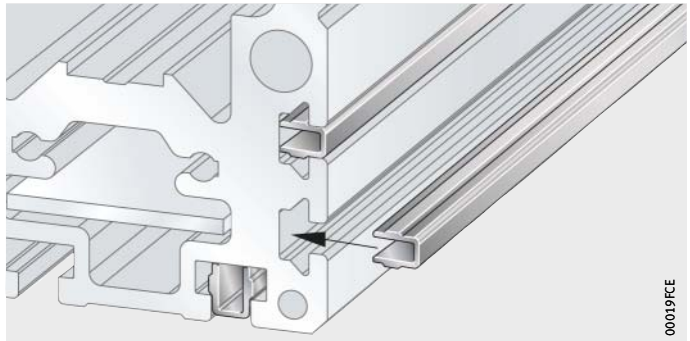

Figure 7
Slot closing strip NAD

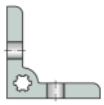

T-nuts
T-bolts

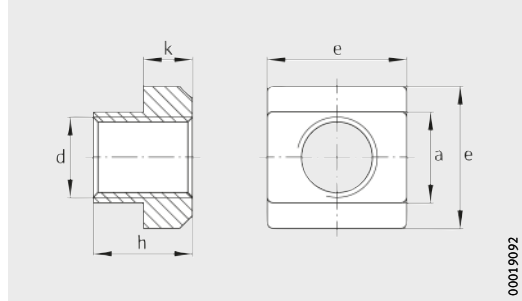

T-nuts according to DIN 508

Dimension table · Dimensions in mm

Designation	Mass	Dimensions									
	m ≈kg	d ∅	a	e	d_2 ∅	h	k	b	h_1	e_1	l
MU-DIN508-M4×5	0,0025	M4	5	9	–	6,5	3	–	–	–	–
MU-M3×5[1]	0,003	M3	5	9	–	6,5	3	–	–	–	–
MU-DIN508-M4×5-RB	0,0025	M4	5	9	–	6,5	3	–	–	–	–
MU-DIN508-M6×8	0,018	M6	8	13	–	10	6	–	–	–	–
MU-M4×8[1]	0,009	M4	8	13	–	10	6	–	–	–	–
MU-DIN508-M6×8-RB	0,008	M6	8	13	–	10	6	–	–	–	–
MU-DIN508-M8×10	0,018	M8	10	15	–	12	6	–	–	–	–
MU-M6×10[1]	0,014	M6	10	15	–	12	6	–	–	–	–
MU-DIN508-M8×10-RB	0,012	M8	10	15	–	12	6	–	–	–	–
SHR-DIN787-M5×5×25	0,005	M5	5	–	10	–	3	18	6,5	9	25
SHR-DIN787-M8×8×32	0,02	M8	8	–	16	–	6	22	12	13	32
SHR-DIN787-M10×10×40	0,04	M10	10	–	20	–	6	30	14	15	40

[1] T-nuts similar to DIN 508, T-bolts in accordance with DIN 787.

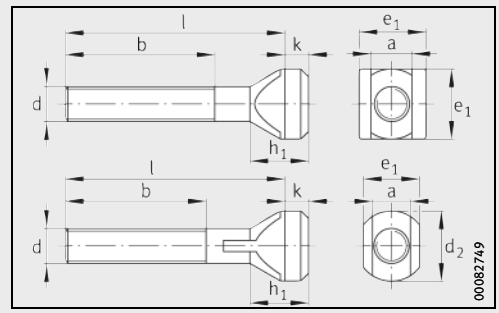

T-bolts in accordance with DIN 787
(both head designs possible)

Rotatable T-nuts
Positionable T-nuts

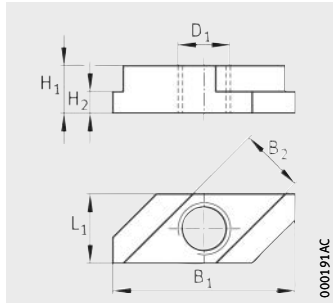

MU..-RHOMBUS · Rotatable T-nut

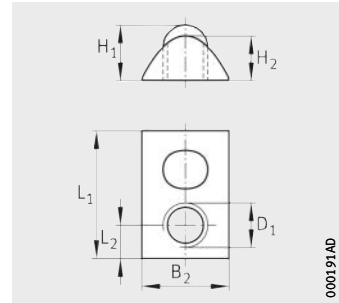

MU..-POS · Positionable T-nut

Dimension table · Dimensions in mm

Designation	Mass	Dimensions							
	m ≈kg	B_1 ±0,2	B_2 ±0,2	D_1 ∅	H_1	H_2	L_1	L_2	Suitable slot
MU-M3×5-RHOMBUS	0,0035	10	5	M3	5	3,5	5	–	5
MU-M4×8-RHOMBUS	0,0055	18,8	8,8	M4	8,5	5	7,9	–	8
MU-M6×8-RHOMBUS	0,005	21,8	7,6	M6	10	6	7,6	–	8
MU-M8×10-RHOMBUS	0,009	26,4	9,6	M8	12	6	9,6	–	10
MU-M4×5-POS	0,002	–	8	M4	5	4	11,5	3	5
MU-M5×5-POS	0,002	–	8	M5	5	4	11,5	4	5
MU-M6×8-POS	0,01	–	13,8	M6	8,2	7,3	23	6,5	8
MU-M8×8-POS	0,0095	–	13,8	M8	8,2	7,3	23	7,5	8
MU-M4×8-POS	0,011	–	13,8	M4	8,2	7,3	23	7,5	8
MU-M5×8-POS	0,011	–	13,8	M5	8,2	7,3	23	7,5	8
MU-M6×10-POS	0,009	–	14	M6	9,1	7,4	22,5	6,8	10
MU-M8×10-POS	0,01	–	14	M8	9,1	7,4	22,5	6,8	10

T-strips

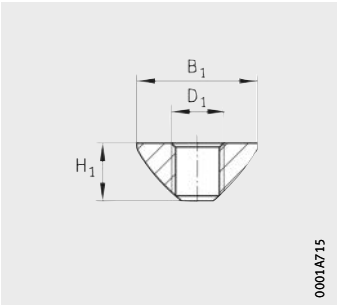

LEIS..-T-NUT-SB-ST
Swivel type

Dimension table · Dimensions in mm

Designation	Suitable slot	Dimensions		
		B_1	B_2	D_1
LEIS-M4/5-T-NUT-SB-ST[1]	5	8	–	M4
LEIS-M6/8-T-NUT-SB-ST[1]	8	13,7		M6
LEIS-M8/8-T-NUT-SB-ST[1]				M8
LEIS-M4/5-T-NUT-HR-ALU[2]	5	8	5	M4
LEIS-M6/8-T-NUT-HR-ST[2]	8	17	8	M6
LEIS-M6/8-T-NUT-HR-ALU[2]				
LEIS-M4/5-T-NUT-ST[3]	5	9	4,6	M4
LEIS-M6/8-T-NUT-ST[3]	8	13	7,6	M6
LEIS-M8/10-T-NUT-ST[3]	10	15	9,6	M8

Material: Steel to grade 8 (bright), $R_m \geqq 700$ N/mm^2.

1) Swivel type T-strip.
2) Semicircular T-strip for sliding in via end face.
3) T-strips similar to DIN 508 for sliding in via end face.
4) n = number of threaded holes.

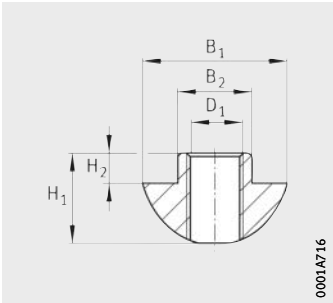

LEIS..-T-NUT-HR
Semicircular

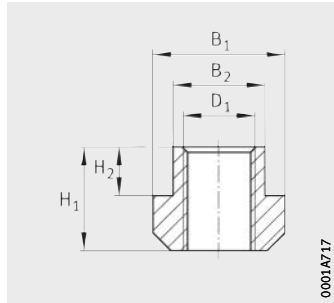

LEIS..-T-NUT-ST
Similar to DIN 508

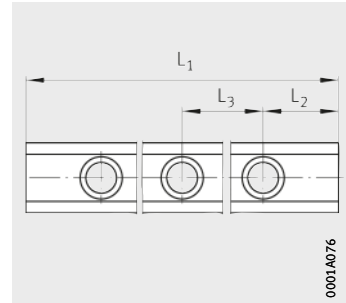

Top view

H_1	H_2	L_1 [4)]	L_1 −3		L_2 Standard	L_2 −1,5		L_3
			max.	min.		max.	min.	
4	–	$n \cdot L_3 + 2 \cdot L_2$	500	100	20	45	≧25	50
7			2 000					
4,5	0,6	$n \cdot L_3 + 2 \cdot L_2$	2 000	100	20	45	≧25	50
10,5	3,5							
6,5	3,5	$n \cdot L_3 + 2 \cdot L_2$	2 000	100	20	45	≧25	50
10	4							
12	6							

Connector set
Parallel connectors

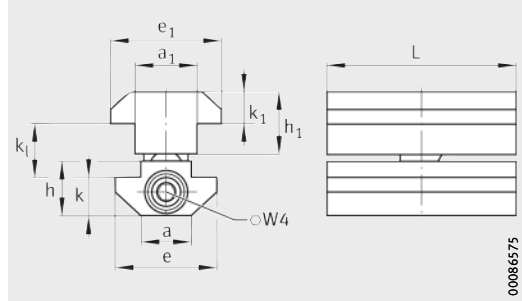

VBS

Dimension table · Dimensions in mm

Designation	Mass	Dimensions										
	m	a	a_1	e	e_1	h	h_1	k	k_1	k_l		L
	≈kg									min.	max.	
VBS-PVB8	0,052	8	8	16	16	9	9	6,4	6,4	≈7	≈11	30
VBS-PVB10	0,060	10	10	17,4	17,4	10,5	10,5	5,4	5,4	≈8	≈12	30
VBS-PVB8/10	0,058	8	10	16	17,4	9	10,5	6,4	5,4	≈10	≈13	30

Both T-nuts of the parallel connector can be rotated relative to each other by 360°.

Slot closing strip NAD

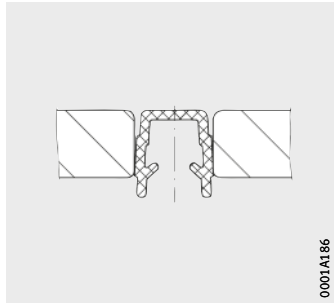

NAD-5×5,7

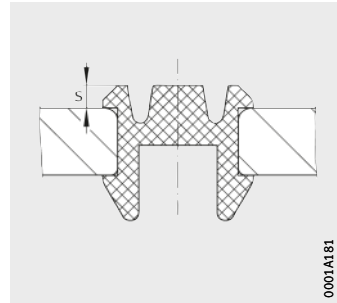

NAD-8×4,5

Dimension table · Dimensions in mm

Designation	Mass	Dimensions	
	m	Suitable slot	Max. projection
	kg/m		
NAD-5×5,7	0,014	5	0
NAD-8×4,5	0,052	8	1,5
NAD-8×11,5	0,018	8	0
NAD-10×6,5	0,051	10	0,5

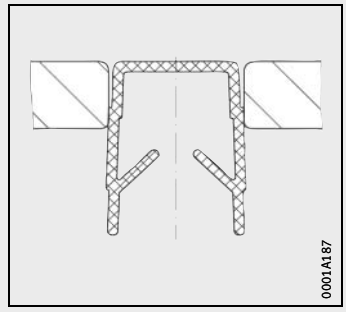

NAD-8×11,5

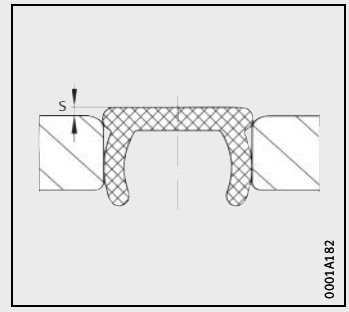

NAD-10×6,5

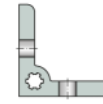

Belt transmission

VG

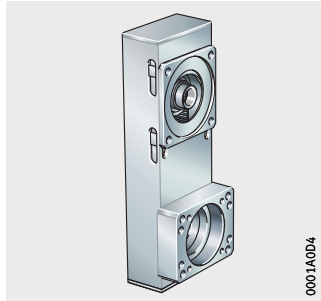

Couplings

KUP

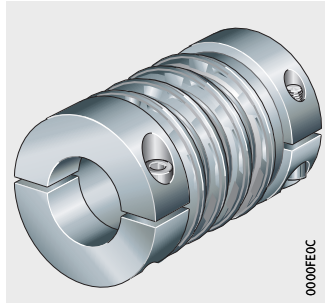

Coupling housings

KGEH

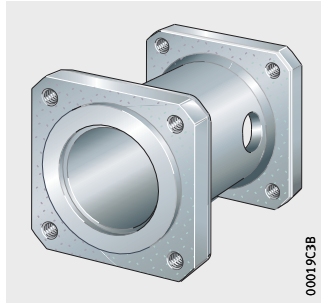

Intermediate shaft couplings

KUP-EZ2-ZW

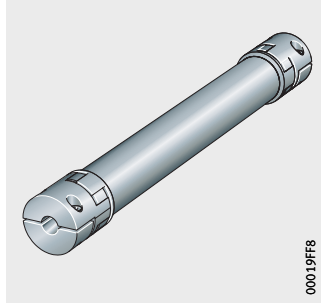

KUP-EAZ-ZW

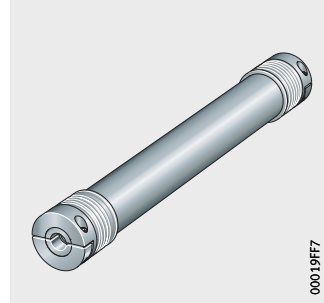

Drive elements

Features

Drive elements such as belt transmissions, couplings, intermediate shaft couplings and coupling housings are optimally matched to the linear actuators and linear tables. The possible combinations are shown in the dimension tables.

Belt transmission VG

Belt transmissions are toothed belt drives. These belt transmissions are used in order to connect servo motors on the one side and linear actuators or linear tables with ball screw drive on the other side. The transmissions are specially matched to linear actuators and linear tables from Schaeffler. Servo motors are particularly suitable for use with the belt transmission, page 759.

With the aid of the belt transmission, the motor is arranged relative to the linear actuator such that the total length of the linear axis is increased by only a very small amount, *Figure 1*. A belt transmission is therefore particularly suitable in applications with restricted mounting space.

The belt transmission has a light, compact housing. The housing is closed on all faces and gives safe encapsulation of the belt drive. The mounting flange for the servo motor can be displaced such that the belt can be tensioned.

The force is transmitted between the motor shaft and the ball screw drive by means of a wear-resistant toothed belt of high dimensional accuracy. The toothed pulleys are of a spaced tooth design with low backlash. This construction reduces wrap errors to a minimum. The toothed belt in the belt transmission also gives damping of vibrations and shocks. Various ratios are available: i = 1, i = 1,5 and i = 2.

The shaft of the ball screw drive and the motor shaft are connected to the toothed pulleys with form fit by means of feather keys. The belt transmission is flange mounted on the linear actuator by means of four screws. The motor is also flange mounted on the other side by means of four screws. The belt transmission thus also functions as a motor carrier.

Belt transmissions are suitable for temperatures from 0 °C to +80 °C.

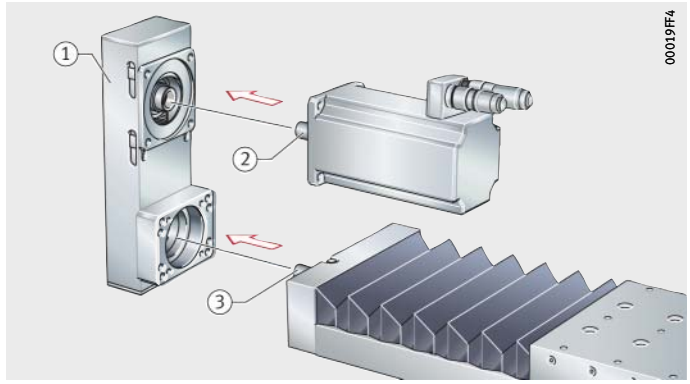

① Belt transmission
② Shaft of servo motor
③ Ball screw drive of linear actuator

Figure 1
Belt transmission VG

Alignment

The belt transmission can be flange mounted on the linear actuator in four different directions. The servo motor can also be mounted in four positions, *Figure 2* and *Figure 3*. The position of the belt transmission and servo motor can be defined at the time of mounting.

Intermediate positions are not possible with the belt transmission and servo motor.

AO, AL, AU, AR = positions of belt transmission
S1, S2, S3, S4 = positions for motor cable connectors

① Locating bore for drive spindle

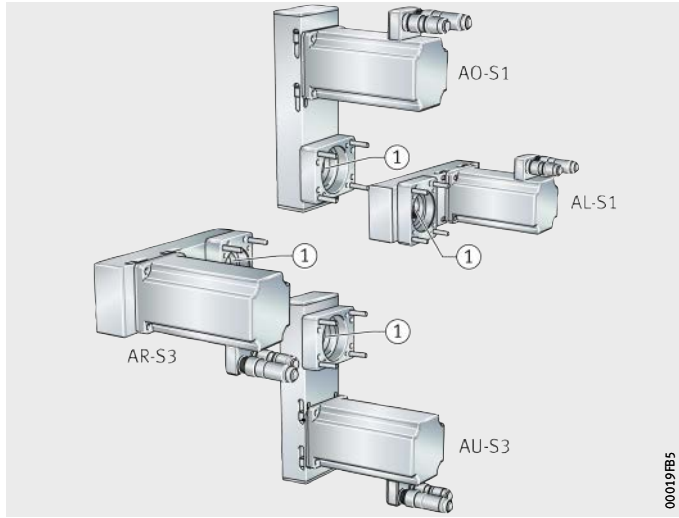

Figure 2
Alignment of belt transmission and servo motor

AO, AL, AU, AR = positions of belt transmission
S1, S2, S3, S4 = positions for motor cable connectors

① Locating bore for drive spindle

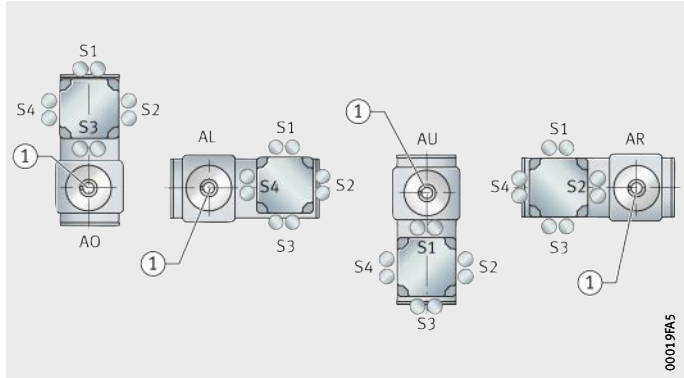

Figure 3
Alignment of belt transmission and servo motor

Scope of delivery

Belt transmissions are supplied as individual parts. Servo motors must be ordered separately. The belt transmission and servo motor can also be supplied as a completely assembled unit together with the linear actuator or linear table. In this case, the positions of the belt transmission and the motor cable connectors must be stated at the time of ordering.

Couplings KUP

These clearance-free, highly compact metallic bellow couplings have two clamping hubs made from high strength aluminium. The metallic bellows is made from high-grade steel. The clamping hubs have a bore with a fit of H7. Other bores or designs with slots are available as special designs, please contact us in such cases.

Due to their high torsional rigidity of the couplings, they transmit the rotational angle with very high precision. The couplings have a low moment of inertia and allow high speeds. The couplings are free from maintenance and wear and have a permissible temperature of –30 °C to +90 °C.

The couplings are suitable where a slight radial and axial shaft offset is present. They also allow small angular errors.

Figure 4
Coupling KUP

Performance data of couplings

Designation	Nominal torque	Torsional rigidity	Permissible lateral shaft offset	Mass moment of inertia	Mass	Screw tightening torque
	Nm	kNm/rad	mm	kg · cm^2	kg	Nm
KUP-51-25	5	0,24	0,1	0,028	0,04	1,2
KUP-34-40	13,5	4,1	0,25	0,0348	0,14	7
KUP-50-40-2	14,5	5,6	0,17	0,031	0,11	7
KUP-560-56	50	19	0,2	2	0,7	14
KUP-560-56.1	74	28	0,2	2,1	0,7	14
KUP-560-56.2	90	35	0,2	2,1	0,7	14
KUP-560-66	96	33	0,2	3,9	0,58	25
KUP-560-66.1	155	84	0,2	4,1	0,58	25
KUP-560-66.2	175	95	0,2	4,3	0,58	25
KUP-KM170	170	60	0,38	8,3	0,84	65
KUP-KM600	600	230	0,3	47	2,2	200
KUP-KM900	900	360	0,3	90	3,3	200

Coupling housings KGEH

These coupling housings are made from aluminium. Due to the precise flange geometry, the shaft offset in an axial direction is reduced to a minimum. The coupling housing is mounted between the linear actuator and the motor by means of the flanges on both sides.

The coupling housing has mounting holes, *Figure 5*. These holes are used to screw mount the metallic bellow or helical beam couplings to the drive shafts.

The coupling housing completely encloses the rotating coupling and thus prevents the risk of accidents.

① Mounting hole

Figure 5
Coupling housing KGEH

Scope of delivery

The coupling housing is supplied together with the fixing material.

Intermediate shaft coupling KUP..-ZW

Intermediate shaft couplings are used to connect the drives of two linear axes moving in parallel. This is advisable, for example, in the case of planar surface gantry systems. An intermediate shaft coupling comprises a rigid shaft with a shaft coupling on both ends. The construction ensures that the necessary drive torques are transmitted without backlash.

The length of each intermediate shaft coupling must be matched to the application. The coupling is designed with two half-shells, which gives easier mounting. The intermediate shaft couplings can transmit high torques without backlash. They are maintenance-free and are suitable for mounting in a horizontal or vertical position. Furthermore, they can also compensate shaft offsets.

KUP-EZ2-ZW
KUP-EAZ-ZW

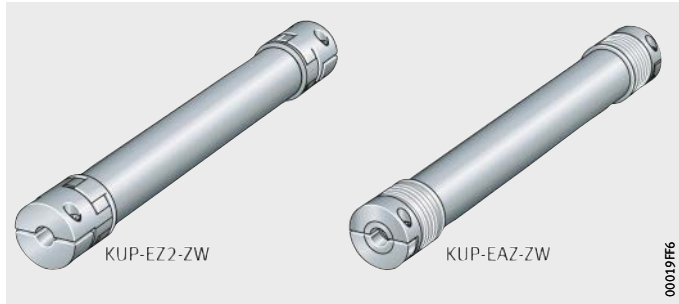

Figure 6
Intermediate shaft couplings

Intermediate shaft couplings must be provided with protective covers to prevent contact on the machine side.

Intermediate shaft coupling KUP-EZ2-ZW

This torsionally elastic and vibration damping intermediate shaft coupling has an elastomer ring with a Shore hardness of 98 SH A. This design also has a low mass moment of inertia.

The rigid shaft is made from aluminium. The coupling hubs are also made from aluminium. In the case of size KUP-EZ2-ZW-800, the hubs are made from steel. The maximum length of the intermediate shaft coupling is 4 000 mm if no intermediate support is provided.

The intermediate shaft coupling is suitable for a temperature range from –30 °C to +100 °C. If temperatures of more than +30 °C are present, for example as a result of radiated heat, please consult us.

Intermediate shaft coupling KUP-EAZ-ZW

This torsionally rigid intermediate shaft coupling has a metallic bellows made from highly elastic high-grade steel. In order to relieve the load on the metallic bellows, a cardanic internal support is present as a special feature.

The rigid shaft is made from aluminium, while in the case of size KUP-EAZ-ZW-300 and above the shaft is made from steel. The small coupling hubs are made from aluminium, while in the case of size KUP-EAZ-ZW-150 and above the hubs are made from steel. The maximum length of the intermediate shaft coupling is 6 000 mm if no intermediate support is provided.

The intermediate shaft coupling is suitable for a temperature range from –30 °C to +100 °C.

Shaft offset

The intermediate shaft couplings are also suitable if a radial and axial shaft offset is present or in the case of angular errors.
The maximum radial shaft offset must be calculated from the length. The parameters and maximum values are given in the dimension tables.

ΔK_r = radial shaft offset
ΔK_w = angular error
ΔK_a = axial shaft offset

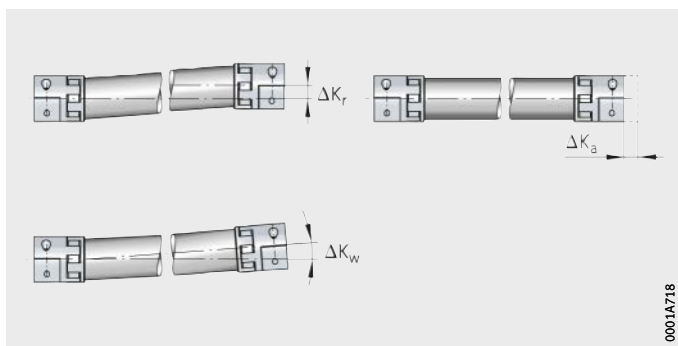

Figure 7
Shaft offset

$$\Delta K_r = 0{,}01746 \cdot (A - L_{Kr})$$

ΔK_r mm
Radial shaft offset
A mm
Total length of intermediate shaft coupling
L_{Kr} mm
Maximum shaft offset.

Total torsional rigidity

The torsional rigidity of intermediate shaft couplings is dependent on the length of the rigid shaft and the two couplings. The necessary parameters are given in the dimension tables.

$$C_T^{ZA} = \frac{C_T^B \cdot \frac{C_T^{ZWR}}{A - 2 \cdot H}}{C_T^B + \frac{C_T^{ZWR}}{A - 2 \cdot H}}$$

$$\varphi = \frac{180 \cdot T_{AS}}{\pi \cdot C_T^{ZA}}$$

C_T^{ZA} Nm/mrad
Total torsional rigidity
C_T^B Nm/mrad
Torsional rigidity of both bellows bodies, see dimension table
C_T^{ZWR} Nm/mrad
Torsional rigidity per m of intermediate tube, see dimension table
A mm
Total length of intermediate shaft coupling
H mm
Bellows body length, see dimension table
φ °
Torsion angle
T_{AS} Nm
Peak torque on drive side.

Mass

The mass of the intermediate shaft coupling comprises the masses of the two couplings and the rigid shaft, *Figure 8*. The necessary parameters are given in the dimension tables.

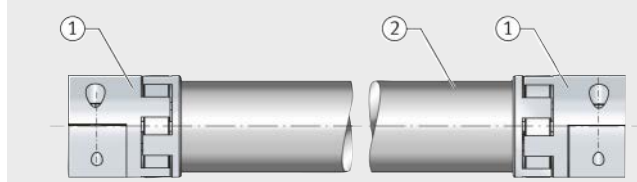

① Coupling
② Rigid shaft

Figure 8
Masses
of intermediate shaft coupling

$$m_{tot} = (A - 2 \cdot H) \cdot m + M$$

m_{tot} kg
Radial shaft offset
A mm
Total length of intermediate shaft coupling
H mm
Length of coupling, see dimension table
m kg/m
Mass of rigid shaft measured relative to length, see dimension table
M kg
Mass of both couplings, see dimension table.

Belt transmission VG

For linear actuators and
linear tables with ball screw drive

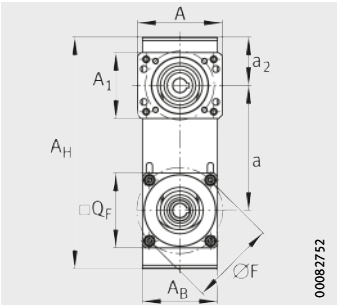

VG

Dimension table · Dimensions in mm

Designation	Combined with		Ratio	Dimensions			
	Linear actuator Linear table	Servo motor	i	a	a_2	A	A_B
VG2010	**MKUVE20..-KGT..-N MDKUVE15..-KGT..-N MKKUVE20..-KGT..-N**	**MOT-SMH82**	1:1	137	59	92	80
VG2015			1:1,5	136,6			
VG2020			1:2	128,8			
VG2010-L	**MDKUVE15..-KGT..-N**	**MOT-SMH82**	1:1	204,4	59	92	80
VG2015-L			1:1,5	199,2			
VG2020-L			1:2	196,4			
VG2010-LTP	**LTP15 LTPG15**	**MOT-SMH82**	1:1	137	59	92	80
VG2015-LTP			1:1,5	136,6			
VG2020-LTP			1:2	128,8			
VG2010-L-LTP	**LTP15 LTPG15**	**MOT-SMH82**	1:1	204,4	59	92	80
VG2015-L-LTP			1:1,5	199,2			
VG2020-L-LTP			1:2	196,4			
VG2510	**MKUSE25..-KGT MDKUVE25..-KGT..-N MDKUSE25..-KGT..-N LTP25 LTPG25**	**MOT-SMH100**	1:1	167	65	110	100
VG2515			1:1,5	154			
VG2520			1:2	158,5			
VG2510-A	**MKUVE20..-KGT..-N MKKUVE20..-KGT..-N**	**MOT-SMH100**	1:1	167	65	99	100
VG2515-A			1:1,5	154			
VG2520-A			1:2	158,5			
VG2510-L	**MDKUVE25..-KGT..-N MDKUSE25..-KGT..-N LTP25-325**	**MOT-SMH100**	1:1	302	65	110	100
VG2515-L			1:1,5	299,2			
VG2520-L			1:2	294			

1) Mounting dimension A_5 valid for servo motor without brake.

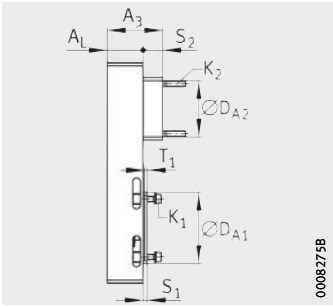

VG

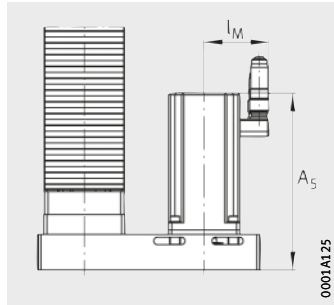

VG

			Mounting dimensions												
A_H	A_L	A_3	A_1	A_5 1)	$ØD_{A1}$ H8	$ØD_{A2}$ H8	ØD K7	ØF	K_1	K_2	l_M	Q_F	S_1	S_2	T_1
268	40	54	74	209,5	80	60	14	100	M6	M6	81	82	6	14	4
335	40	54	74	208	80	60	14	100	M6	M6	81	82	6	14	4
268	40	54	74	209,5	80	60	14	100	M6	M6	81	82	6	14	4
335	40	54	74	209,5	80	60	14	100	M6	M6	81	82	6	14	4
310	50	82,5	88	247,5	95	75	19	115	M8	M8	91	100	6	24	4
310	50	63	86	247,5	95	60	19	115	M8	M6	91	100	6	13	4
460	50	74	88	247,5	95	75	19	115	M8	M8	91	100	6	24	4

Belt transmission VG

For linear actuators and linear tables
with ball screw drive
Performance data

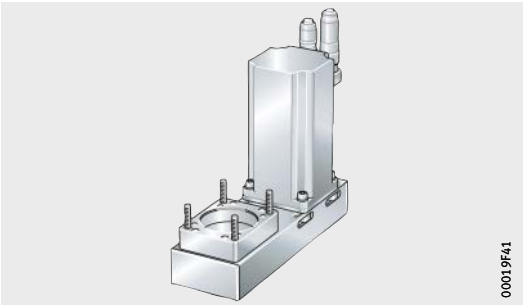

VG

Performance data					
Designation	Mass	Combined with		Permissible drive speed on motor speed for spindle pitch P[2) 3)]	
	Belt transmission	Linear actuator Linear table	Servo motor	P = 5	P = 10
	m_{VG}[1)] ≈kg			n min^{-1}	n min^{-1}
VG2010	1,26	**MKUVE20..-KGT..-N** **MDKUVE15..-KGT..-N** **MKKUVE20..-KGT..-N**	**MOT-SMH82**	3 500	3 000[4)]
VG2015	1,25			2 330	2 000[4)]
VG2020	1,25			1 750	1 500[4)]
VG2010-L	1,42	**MDKUVE15..-KGT..-N**	**MOT-SMH82**	3 500	3 000
VG2015-L	1,4			2 330	2 000
VG2020-L	1,4			1 750	1 500
VG2010-LTP	1,26	**LTP15** **LTPG15**	**MOT-SMH82**	3 500	3 000
VG2015-LTP	1,25			2 330	2 000
VG2020-LTP	1,25			1 750	1 500
VG2010-L-LTP	1,42	**LTP15** **LTPG15**	**MOT-SMH82**	3 500	3 000
VG2015-L-LTP	1,4			2 330	2 000
VG2020-L-LTP	1,4			1 750	1 500
VG2510	1,96	**MKUSE25..-KGT** **MDKUVE25..-KGT..-N** **MDKUSE25..-KGT..-N** **LTP25** **LTPG25**	**MOT-SMH100**	2 600	2 600
VG2515	2,1			1 730	1 730
VG2520	2,13			1 300	1 300
VG2510-A	1,73	**MKUVE20..-KGT..-N** **MKKUVE20..-KGT..-N**	**MOT-SMH100**	3 500	3 000[4)]
VG2515-A	1,98			2 330	2 000[4)]
VG2520-A	1,9			1 750	1 500[4)]
VG2510-L	2,44	**MDKUVE25..-KGT..-N** **MDKUSE25..-KGT..-N** **LTP25-325**	**MOT-SMH100**	2 600	2 600
VG2515-L	2,6			1 730	1 730
VG2520-L	2,63			1 300	1 300

1) m_{VG} = mass of belt transmission including motor adapter flange and actuator adapter flange.

2) Note the critical spindle speed.

3) The maximum possible motor drive speed is dependent on the maximum permissible spindle speed or critical whirling spindle speed and the reduction ratio of the belt transmission.

4) Spindle pitch not possible in the case of MKKUVE20..-KGT.

			Drive		
P = 20 n min^{-1}	P = 40 n min^{-1}	P = 50 n min^{-1}	Toothed gears and gearboxes Reduced mass moment of inertia of both synchronising pulleys J_{VG} $kg \cdot cm^2$	Ratio i	Toothed belt
3 500[4)]	–	3 500[4)]	0,2692	1:1	16AT5
2 330[4)]		2 330[4)]	0,4361	1:1,5	
1 750[4)]		1 750[4)]	0,2171	1:2	
3 500	–	3 500	0,2692	1:1	16AT5
2 330		2 330	0,4361	1:1,5	
1 750		1 750	0,2171	1:2	
3 500	–	3 500	0,2692	1:1	16AT5
2 330		2 330	0,4361	1:1,5	
1 750		1 750	0,2171	1:2	
3 500	–	3 500	0,2692	1:1	16AT5
2 330		2 330	0,4361	1:1,5	
1 750		1 750	0,2171	1:2	
2 600	2 600	–	0,8582	1:1	25AT5
1 730	1 730		1,346	1:1,5	
1 300	1 300		0,6431	1:2	
3 500[4)]	–	3 500[4)]	0,8785	1:1	25AT5
2 330[4)]		2 330[4)]	1,298	1:1,5	
1 750[4)]		1 750[4)]	0,6162	1:2	
2 600	2 600	–	0,8785	1:1	25AT5
1 730	1 730		1,298	1:1,5	
1 300	1 300		0,6162	1:2	

Metallic bellows couplings and helical beam couplings

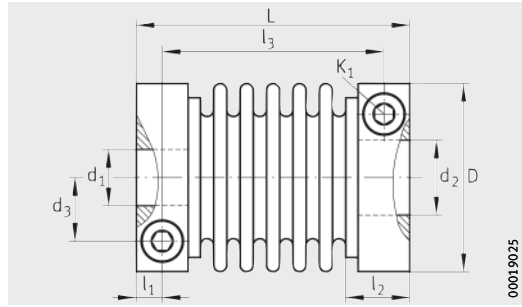

Coupling KUP

Dimension table · Dimensions in mm

Designation	Dimensions										
	D	L	d_1 H7	d_2 H7	d_1, d_2 H7 min.	d_1, d_2 H7 max.	d_3	K_1	l_1	l_2	l_3
KUP-50-25-5H7/11H7	25	36	5	11	–	–	7,5	M3	4,5	12	27
KUP-50-25-10H7/11H7			10								
KUP-50-25-d1H7/d2H7			–	–	6	14					
KUP-34-40-9H7/11H7	40	50	12	11	–	–	13,5	M5	5,5	11	39
KUP-34-40-12H7/14H7				14							
KUP-34-40-d1H7/d2H7			–	–	6	19					
KUP-50-40-2-9H7/19H7	40	58	9	19	–	–	13	M5	5,7	15,7	47,6
KUP-50-40-2-9H7/14H7				14							
KUP-50-40-2-10H7/11H7	40	58	10	11	–	–	13	M5	5,7	15,7	47,6
KUP-50-40-2-10H7/14H7				14							
KUP-50-40-2-10H7/19H7				19							
KUP-50-40-2-11H7/11H7	40	58	11	11	–	–	13	M5	5,7	15,7	47,6
KUP-50-40-2-11H7/13H7				13							
KUP-50-40-2-11H7/14H7				14							
KUP-50-40-2-11H7/16H7				16							
KUP-50-40-2-11H7/19H7				19							
KUP-50-40-2-12H7/16H7	40	58	12	16	–	–	13	M5	5,7	15,7	47,6
KUP-50-40-2-13H7/14H7	40	58	13	14	–	–	13	M5	5,7	15,7	47,6
KUP-50-40-2-13H7/19H7				19							
KUP-50-40-2-14H7/16H7	40	58	14	16	–	–	13	M5	5,7	15,7	47,6
KUP-50-40-2-14H7/19H7				19							
KUP-50-40-2-16H7/19H7	40	58	16	19	–	–	13	M5	5,7	15,7	47,6
KUP-50-40-2-19H7/19H7			19								
KUP-50-40-2-d1H7/d2H7			–	–	6	20					

Metallic bellows couplings and helical beam couplings

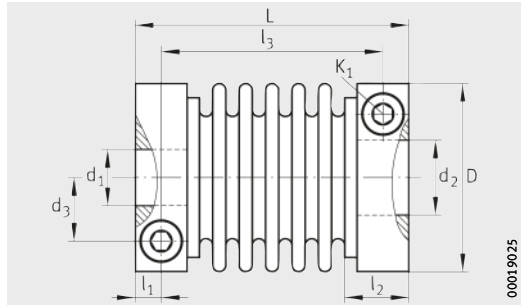

Coupling KUP

Dimension table (continued) · Dimensions in mm

Designation	Dimensions										
	D	L	d_1 H7	d_2 H7	d_1, d_2 H7 min.	d_1, d_2 H7 max.	d_3	K_1	l_1	l_2	l_3
KUP-560-56-13H7/24H7	56	81	13	–	–	–	19	M6	7,5	25,5	66
KUP-560-56-16H7/19H7	56	81	16	19	–	–	19	M6	7,5	25,5	66
KUP-560-56-16H7/20H7				20							
KUP-560-56.1-16H7/19H7				19							
KUP-560-56-16H7/24H7				24							
KUP-560-56-16H7/25H7				25							
KUP-560-56-19H7/24H7	56	81	19	24	–	–	19	M6	7,5	25,5	66
KUP-560-56-20H7/22H7	56	81	20	22	–	–	19	M6	7,5	25,5	66
KUP-560-56.1-20H7/25H7				25							
KUP-560-56.1-20H7/22H7				22							
KUP-560-56-22H7/25H7	56	81	22	25	–	–	19	M6	7,5	25,5	66
KUP-560-56.1-22H7/25H7											
KUP-560-56.2-22H7/25H7											
KUP-560-56-d1H7/d2H7	56	81	–	–	15	28	19	M6	7,5	25,5	66
KUP-560-56.1-d1H7/d2H7					18						
KUP-560-56.2-d1H7/d2H7					22						
KUP-560-66-20H7/22H7	66	87	20	22	–	–	22	M8	9,5	27	68
KUP-560-66-20H7/32H7				32							
KUP-560-66.1-20H7/32H7											
KUP-560-66-22H7/32H7	66	87	22	32	–	–	22	M8	9,5	27	68
KUP-560-66.1-22H7/32H7											
KUP-560-66.1-25H7/32H7	66	87	25	32	–	–	22	M8	9,5	27	68
KUP-560-66-32H7/32H7	66	87	32	32	–	–	22	M8	9,5	27	68
KUP-560-66.1-32H7/32H7											
KUP-560-66.2-32H7/32H7											
KUP-560-66-d1H7/d2H7	66	87	–	–	22	32	22	M8	9,5	27	68
KUP-560-66.1-d1H7/d2H7					25						
KUP-560-66.2-d1H7/d2H7					28						
KUP-KM170-d1H7/d2H7	82	92	–	–	22	43	28,5	M10	10,5	26	71
KUP-KM600-40H7/50H7	122	116	40	50	–	–	43,5	M14	13,5	32	89
KUP-KM600-d1H7/d2H7			–	–	35	70					
KUP-KM900-50H7/55H7	133	143	50	55	–	–	47	M14	18,5	45	106
KUP-KM900-d1H7/d2H7			–	–	40	75					

Elastomer coupling

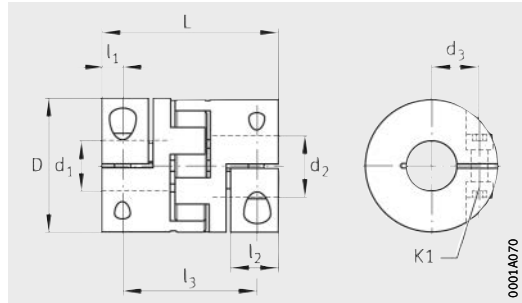

Elastomer coupling

Dimension table · Dimensions in mm

Designation	Dimensions		Mounting dimensions						
	D[1]	L	d_1, d_2 H7		d_3	l_1	l_2	l_3	K_1
			min.	max.					
KUP-EKM8-d1H7/d2H7	32	40	8	15	10,5	6	13,5	28	M4
KUP-EK2/20/A-d1H7/d2H7	44,5	66	8	25	15,5	8,5	25	49	M5
KUP-EK2/60/A-d1H7/d2H7	57	78	12	32	21	10	30	58	M6
KUP-EK2/150/A-d1H7/d2H7	68	90	19	36	24	12	35	66	M8
KUP-EK2/450/A-d1H7/d2H7	105	126	20	45	38	17,5	50	91	M12
KUP-EK2/800/A-d1H7/d2H7	139	162	35	80	50,5	23	65	116	M16

[1] Largest outside diameter across screw head.

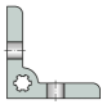

Elastomer coupling

Technical data

Dimension table · Dimensions in mm

Designation	Mass ≈kg	Nominal torque[1)] Nm	Hardness of elastomer ring	Torsional rigidity kNm/rad
KUP-EKM8-d1H7/d2H7	0,06	8	98Sh-A	0,1
KUP-EK2/20/A-d1H7/d2H7	0,15	17	98Sh-A	2,54
KUP-EK2/60/A-d1H7/d2H7	0,35	60	98Sh-A	7,94
KUP-EK2/150/A-d1H7/d2H7	0,6	130[2)] 160	98Sh-A	13,4
KUP-EK2/450/A-d1H7/d2H7	1,7	530	98Sh-A	23,7
KUP-EK2/800/A-d1H7/d2H7	2,5	800	98Sh-A	41,27

1) Nominal torque valid for temperature range from –10 °C to 30 °C
(In the case of low or higher ambient temperatures, an appropriate temperature factor must be taken into consideration).

2) Restricted by clamping hub diameter ≦ d_1 at d_2 = 20 mm, d_1 and d_2 see page 860.

Maximum radial shaft offset	Mass moment of inertia	Tightening torque		Suitable for
	kg · cm^2		Nm	
0,1	0,00001	M4	4	MLFI20..-ZR
0,1	0,32	M5	8	MLFI25..-ZR-N, MKUVE15..-KGT-N, MKUVE20..-KGT-N, MKUSE25..-KGT
				MDKUVE15..-KGT-N, MDKU(S,V)E25..-KGT-N
0,12	1	M6	15	M(K)LF32..-ZR, M(K)LF52..-ZR, MLFI50..-C-ZR-N, MKUVE20..-C-ZR-N
				MKUVE20..-KGT-N, MKUSE25..-KGT-N
				MDKUVE15..-KGT-N, MDKU(S,V)E25..-KGT-N
				MLFI140..-3ZR-N, MDKUVE15..-3ZR-N
				MKUSE25..-ZR-N, MKUVE25..-ZR, MDKUVE25..-ZR-N
0,15	2,6	M8	35	MLF52..-ZR, MKUSE25..-ZR, MDKUSE25..-ZR-N, MDKUVE25..-3ZR-N, MKUVE25..-ZR, MDKUVE25..-ZR-N
				MLFI200..-3ZR-N, MDKUSE25..-3ZR-N
				MDKUSE25..-3ZR-N, MDKUVE25..3ZR-N
0,18	18	M12	120	MDKUVE35..-3ZR-N
0,1	52	M14	185	MDKUVE35..-3ZR-N

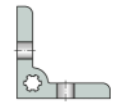

Coupling housings

For linear units
with ball screw drive

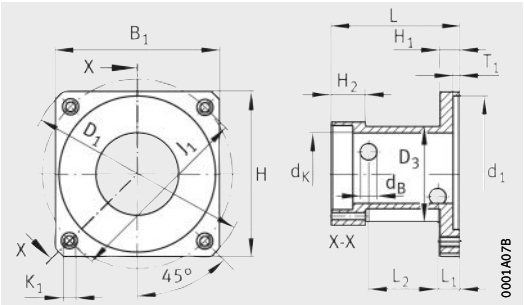

KGEH

Dimension table · Dimensions in mm

Designation	Suitable	Combined with	
	Linear actuators Linear tables	Coupling	Servo motor
KGEH15/36000-MKUVE-KGT	**MKUVE15..-KGT..-N**	**KUP-50-40-2-10H7/14H7**	**MOT-SMH82-SINCOS**
KGEH15/36100-MKUVE-KGT		**KUP-50-40-2-10H7/11H7**	**MOT-SMH60-C7-SINCOS**
KGEH15/36200-MKUVE-KGT		**KUP-50-40-2-10H7/19H7**	**MOT-SMH100-SINCOS**
KGEH20/36000-MKUVE-KGT	**MKUVE20..-KGT..-N, MDKUVE15..-KGT..-N, LTE30..-A(B)-20, LTS30..-20, LTP15..-20**	**KUP-50-40-2-13H7/14H7**	**MOT-SMH82-SINCOS**
KGEH20/36100-MKUVE-KGT		**KUP-50-40-2-13H7/19H7**	**MOT-SMH100-SINCOS**
KGEH20/36200-MKUVE-KGT		**KUP-50-40-2-11H7/13H7**	**MOT-SMH60-C7-SINCOS**
KGEH20/36300-MKUVE-KGT		**KUP-560-56-13H7/24H7**	**MOT-MH145-SINCOS**
KGEH25/36000-MKUE-KGT	**MKUSE25..-KGT, MDKUVE25..-KGT..-N, MDKUSE25..-KGT..-N, LTP25**	**KUP-50-40-2-14H7/19H7**	**MOT-SMH82-SINCOS**
KGEH25/36100-MKUE-KGT		**KUP-560-56-19H7/24H7**	**MOT-MH145-08-SINCOS**
KGEH25/36300-MKUE-KGT		**KUP-50-40-2-19H7/19H7**	**MOT-SMH100-SINCOS**
KGEH35/36000-MDKUSE-KGT	**MDKUVE35..-KGT..-N**	**KUP-560-66.2-24H7/25H7**	**MOT-SMH145**
KGEH16/36000-LTS-KGT	**LTS16..-12, LTE16..-A(B)-12**	**KUP-50-25-5H7/11H7**	**MOT-SMH60-C7-SINCOS**
KGEH20/36100-LTS-KGT	**LTS20..-KGT, LTE20..-A(B)-KGT**	**KUP-34-40-9H7/11H7**	**MOT-SMH60-C7-SINCOS**
KGEH20/36200-LTS-KGT		**KUP-34-40-9H7/14H7**	**MOT-SMH82-SINCOS**
KGEH20/36300-LTS-KGT		**KUP-50-40-2-9H7/19H7**	**MOT-SMH100-SINCOS**
KGEH25/36000-LTS-KGT	**LTS25..-16, LTE25..-A(B)-16**	**KUP-34-40-9H7/11H7**	**MOT-SMH60-C7-SINCOS**
KGEH25/36100-LTS-KGT		**KUP-34-40-9H7/14H7**	**MOT-SMH82-SINCOS**
KGEH25/36200-LTS-KGT		**KUP-50-40-2-9H7/19H7**	**MOT-SMH100-SINCOS**
KGEH40/36000-LTS-KGT/25	**LTS40..-25, LTE40..-A(B)-25, LTS50..-25, LTE50..-A(B)-25**	**KUP-50-40-2-11H7/16H7**	**MOT-SMH60-C7-SINCOS**
KGEH40/36100-LTS-KGT/25		**KUP-50-40-2-14H7/16H7**	**MOT-SMH82-SINCOS**
KGEH40/36200-LTS-KGT/25		**KUP-560-56-16H7/19H7**	**MOT-SMH100-SINCOS**
KGEH40/36000-LTS-KGT/32	**LTS40..-32, LTE40..-A(B)-32, LTS50..-32, LTE50..-A(B)-32**	**KUP-50-40-2-14H7/16H7**	**MOT-SMH82-SINCOS**
KGEH40/36100-LTS-KGT/32		**KUP-50-40-2-16H7/19H7**	**MOT-SMH100-SINCOS**
KGEH40/36200-LTS-KGT/32		**KUP-560-56-16H7/24H7**	**MOT-MH145-08-SINCOS**

Other coupling housings may be available by agreement.

Mass	Dimensions				Mounting dimensions										
	B_1	H	d_K	L	d_1 H7	d_B	D_1	D_3	H_1	H_2	J_1	K_1	L_1	L_2	T_1
≈kg															
0,28	82	82			80		112				100	M6			4
0,25	70	70	50	78	60	10	95	58	12	21	75	M5	13	42	3,5
0,2	100	100			95		135				115	M8			4
0,66	96	96	50	90	80		125				100	M6	18	44	4
0,54	100	100	60	105	95	10	135	68	12	28	115	M8	13	64	
0,57	75	75	50	90	60		90				75	M5	18	44	3,5
1,25	145	145	70	140	130	16	200	85	15	28	165	M10	25	65	4
0,35	92	92	50	115	80		125	65			100	M6	67	0	4
1,32	142	142	70	140	130	16	190	58	15	23	165	M10	25	65	4,5
0,95	105	105	50	115	95		135	65			115	M8	67	0	3
1,97	140	140	85	160	130	0	200	105	20	20	165	M10	0	0	6
0,17	70	70	30	70	60	10	92	38	8	15	75	M5	17	30	3,5
0,28	70	70	45	90	60	15	92		8		75	M5	17	42	3,5
0,33	82	82	42	80	80	10	112	55	10	15	100	M6	52,5	0	4
0,49	100	100	45	90	95		135		15		115	M8	0	0	
0,26	72	72	42	80	60		90	52	10		75	M5	17	0	
0,27	82	82	44	83	80	10	112			15	100	M6	15,5	42	4
0,43	100	100	46	90	95		135	56	12		115	M8	18	47	
0,34	70	70	46	90	60		92	56			75	M5	13	45	3,5
0,38	82	82			80	12	112		12	15	100	M6			4
0,53	100	100	60	115	95		135	70			115	M8	15	66	
0,5	96	96	46	96	80		120	56			100	M6	63		
0,51	100	100			95	12	135		12	20	115	M8		0	4
0,83	145	145	60	115	130		200	70			165	M10	82		

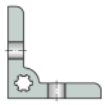

Coupling housings

For linear units
with toothed belt drive

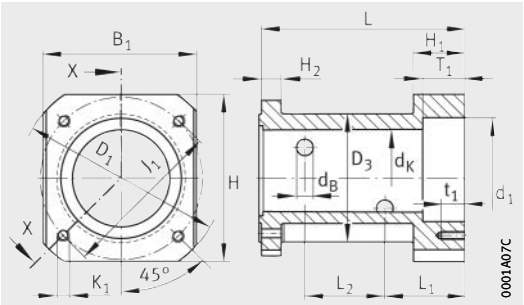

KGEH

Dimension table · Dimensions in mm

Designation	Suitable Linear actuators	Combined with Coupling	Planetary gearbox Servo motor
KGEH32/36000-MLF-ZR	**MLF32..-ZR, MKLF32..-ZR, MKKUSE20..-ZR..-N**	**KUP-560-56-20H7/16H7**	**GETR-PLN70**
KGEH32/43000-MLF-ZR		**KUP-560-56-20H7/16H7**	**GETR-PLE60-70**
KGEH52/43300-MLF-ZR	**MLF52..-ZR, MKLF52..-ZR, MKUVE25..-ZR, MKUVE25..-ZR..-N, MKUSE25..-ZR, MKUSE25..-ZR..-N**	**KUP-560-56-16H7/20H7**	**GETR-PLN70**
KGEH52/43400-MLF-ZR		**KUP-560-66-20H7/32H7**	**GETR-PLN115**
KGEH52/49100-MLF-ZR		**KUP-560-66-20H7/22H7**	**GETR-PLN90**
KGEH20/36000-MLFI-ZR	**MLFI20..-ZR**	**KUP-51-25-10H7/11H7**	**MOT-SMH60**
KGEH25/36000-MLFI-ZR	**MLFI25..-ZR..-N**	**KUP-50-40-2-12H7/16H7**	**MOT-SMH82**
KGEH25/36100-MLFI-ZR		**KUP-34-40-12H7/14H7**	**GETR-PLE60-70**
KGEH25/43000-MLFI-ZR		**KUP-50-40-2-12H7/16H7**	**GETR-PLN70**
KGEH50/43100-MLFI-B-ZR	**MLFI50..-C-ZR..-N, MKUVE20..-C-ZR..-N**	**KUP-560-56-20H7/22H7**	**GETR-PLN90**
KGEH50/43110-MLFI-B-ZR		**KUP-560-56-20H7/32H7**	**GETR-PLN115**
KGEH50/43300-MLFI-B-ZR		**KUP-560-56-16H7/20H7**	**GETR-PLN70**
KGEH32/36000-MLF-ZR	**MLFI140..-3ZR..-N, MDKUVE15..-3ZR..-N**	**KUP-560-56-16H7/25H7**	**GETR-PLN70**
KGEH32/43100-MLF-ZR		**KUP-560-56.2-22H7/25H7**	**GETR-PLN90**
KGEH32/43300-MLF-ZR		**KUP-560-56.1-22H7/25H7**	**GETR-PLN90**
KGEH15/43200-MDKUVE-ZR		**KUP-560-66.1-25H7/32H7**	**GETR-PLN115**
KGEH25/43200-MDKUE-ZR	**MLFI200..-3ZR..-N, MDKUVE25..-3ZR..-N, MDKUSE25..-3ZR..-N**	**KUP-560-66(.1)-32H7/32H7**	**GETR-PLN115**
KGEH52/49100-MLF-ZR		**KUP-560-66(.1)-22H7/32H7**	**GETR-PLN90**
KGEH35/43000-MDKUSE-3ZR	**MKUVE35..-3ZR..-N**	**KUP-KM900-50H7/55H7**	**GETR-PLN190**
KGEH35/43100-MDKUSE-3ZR		**KUP-KM600-40H7/50H7**	**GETR-PLN142**

Other coupling housings may be available by agreement.

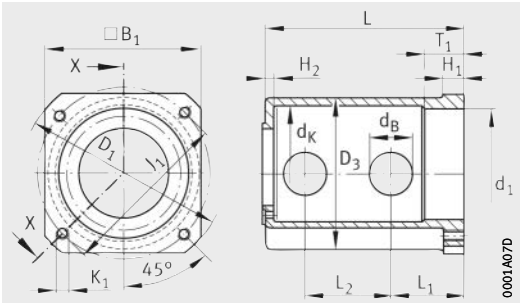

KGEH

Mass	Dimensions				Mounting dimensions										
≈kg	B_1	H	d_K	L	d_1 H7	d_B	D_1	D_3	H_1	H_2	J_1	$K_1 \times t_1$	L_1	L_2	T_1
0,37	70	–	60	106	60	15	92	70	12	10	68	M5×12	31,5	–	20
0,4		–	58	98				66	10		75	M5×10	22	–	3,2
0,9	75	–	60	120	60	16	90	75	25	15	68	M5×12	37,5	–	20
1,2	101	–	70	140	90		135	85	40	10	120	M8×16	52,5	68	32
0,9	85	–		122	70		107		20		85	M6×14	33	–	21
0,16	70	–	29	41	60	8	90	36	8	8	75	M6×8	13	–	3
0,18	70	–	42	75	60	15	92	48	8	5	75	M5×8	60,5	–	3,2
0,2	91	–	41	65	80	10	114		15	7	100	M6×15	51	–	4
	70	–	42	95	60	15	92		28	5	75	M5×28	80,5	–	23,2
0,6	79	–	60	108	70	16	97	68	25	15	85	M6×12	35	–	21
0,85	101	–	70	140	90		135	80	35	12	120	M8×16	55	65	31
0,39	70	–	62	108	60	10	92	68	25	8	75	M5×12	31	63	20
0,37	70	–	60	106	60	15	92	70	12	10	68	M5×12	31,5	–	20
0,46	90	–	58	98	80		116	66	10		100	M6×10	22	–	3,2
0,5	78	–		111	70		100		27		85	M6×27	35	–	19
0,84	110	–	90	138	90	30	140	105	15	94	120	M8×15	52	60	28
1,9	124	114	72	153	90	12	150	95	39	15	120	M8×18	120	–	32
0,9	85	–	70	122	70	16	107	85	20	10	85	M6×14	33	–	21
3,6	190	–	139	207	160	25	240	155	40	27	215	M12×40	60	103	29
2,9	142	–	127	184	130		185	142	25		165	M10×25	51	88	29

Intermediate shaft coupling

Elastomer design
Backlash-free

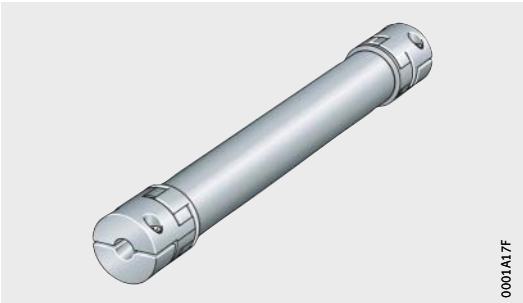

KUP-EZ2-ZW

Dimension table · Dimensions in mm

Designation	Standard actuator	Diameter of drive stud h7	Maximum drive torque Nm
KUP-EZ2-ZW-10-A-10H7/10H7	**MLFI20..-ZR**	10	2,3
KUP-EZ2-ZW-10-A-12H7/12H7	**MLFI25..-ZR..-N**	12	5,6
KUP-EZ2-ZW-60-A-20H7/20H7	**MLFI50..-C-ZR..-N**	20	68,8
	MKUVE20..-C-ZR..-N		
KUP-EZ2-ZW-60-A-20H7/20H7	**MLF32..-ZR**	20	18
	MKLF32..-ZR		
KUP-EZ2-ZW-60-A-20H7/20H7	**MLF52..-ZR**	20	73,5
	MKLF52..-ZR		
KUP-EZ2-ZW-60-A-20H7/20H7	**MKKUSE20..-ZR..-N**	20	18
KUP-EZ2-ZW-60-A-20H7/20H7	**MKU(S)VE25..-ZR**	20	75
KUP-EZ2-ZW-150-A-20H7/20H7			
KUP-EZ2-ZW-150-A-25H7/25H7	**MLFI140..-3ZR..-N**	25	115
	MDKUVE15..-3ZR..-N		
KUP-EZ2-ZW-150-A-32H7/32H7	**MLFI200..-3ZR..-N**	32	207
KUP-EZ2-ZW-300-A-32H7/32H7	**MDKUVE25..-3ZR..-N, MDKUSE25..-3ZR..-N**		
KUP-EZ2-ZW-800-A-50H7/50H7	**MDKUVE35..-3ZR..-N**	50	850

1) Attention!
The maximum drive torque of the actuator is decisive.

2) P is the distance between the shaft end faces.

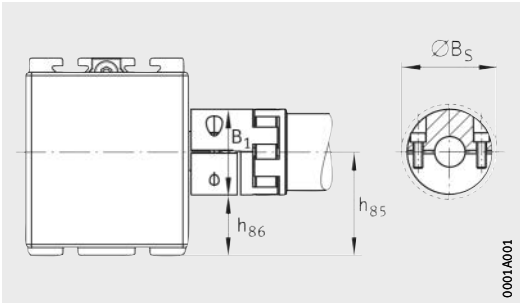

KUP-EZ2-ZW

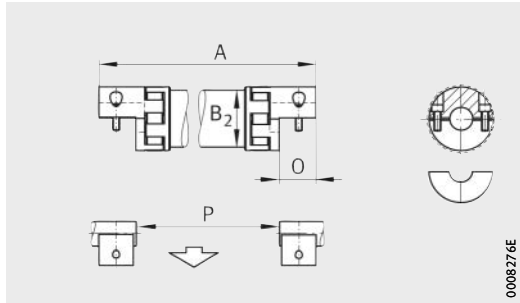

KUP-EZ2-ZW · Mounting length

Position of drive shaft h_{85}	Nominal torque Nm	Clearance diameter B_S of coupling	Remaining section height $h_{86}(h_{85} - B_1/2)$	Mounting length A[2)]
18,8	12,5[1)]	32	2,8	P + 2 · O – 20
24,2	12,5[1)]	32	8,2	P + 2 · O – 2
53,4	60	57	24,9	P + 2 · O – 4
41,5	60[1)]	57	13	P + 2 · O – 16
60,6	60	57	32,1	P + 2 · O – 4
–	60	57	–	P + 2 · O – 16
58	60	57	29,5	P + 2 · O – 4
	160[1)]	68	24	P + 2 · O – 2
44	160[1)]	68	10	P + 2 · O – 2
63	160	68	29	P + 2 · O – 4
	325[1)]	85	20,5	P + 2 · O – 2
88	950[1)]	139	18,5	P + 2 · O – 2

Intermediate shaft coupling

Metallic bellows design
Backlash-free

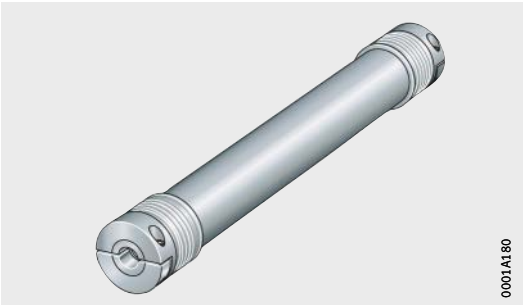

KUP-EAZ-ZW

Dimension table · Dimensions in mm

Designation	Standard actuator	Diameter of drive stud h7	Maximum drive torque Nm
KUP-EAZ-ZW-10-10H7/10H7	**MLFI20..-ZR**	10	2,3
KUP-EAZ-ZW-10-12H7/12H7	**MLFI25..-ZR..-N**	12	5,6
KUP-EAZ-ZW-60-20H7/20H7	**MLFI50..-C-ZR..-N**	20	68,8
	MKUVE20..-C-ZR..-N		
KUP-EAZ-ZW-30-20H7/20H7	**MLF32..-ZR**	20	18
	MKLF32..-ZR		
KUP-EAZ-ZW-60-20H7/20H7	**MLF52..-ZR**	20	73,5
KUP-EAZ-ZW-150-20H7/20H7	**MKLF52..-ZR**		
KUP-EAZ-ZW-30-20H7/20H7	**MKKUSE20..-ZR..-N**	20	18
KUP-EAZ-ZW-60-20H7/20H7	**MKU(S)VE25..-ZR**	20	75
KUP-EAZ-ZW-150-20H7/20H7			
KUP-EAZ-ZW-150-25H7/25H7	**MLFI140..-3ZR..-N**	25	115
	MDKUVE15..-3ZR..-N		
KUP-EAZ-ZW-150-32H7/32H7	**MLFI200..-3ZR..-N**	32	207
KUP-EAZ-ZW-300-32H7/32H7	**MDKUVE25..-3ZR..-N, MDKUSE25..-3ZR..-N**		
KUP-EAZ-ZW-800-50H7/50H7	**MDKUVE35..-3ZR..-N**	50	850

1) Attention!
The maximum drive torque of the actuator is decisive.

2) Attention!
The actuator must be supported appropriately as necessary.

3) P is the distance between the shaft end faces.

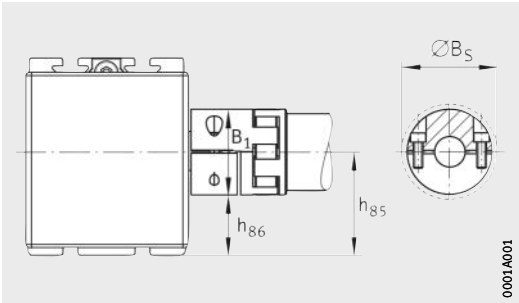

KUP-EZ2-ZW

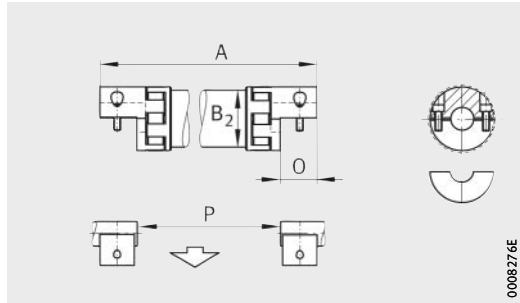

KUP-EZ2-ZW · Mounting length

Position of drive shaft h_{85}, H_3	Nominal torque[1)] Nm	Largest outside diameter B of coupling	Remaining section height $h_{86}(h_{85} - B/2)$	Mounting length A[3)]
18,8	10	40	–1,2[2)]	P + 2 · O – 10
24,2	10	40	4,2	P + 2 · O – 2
53,4	60	66	20,4	P + 2 · O – 2
41,5	30	55	14	P + 2 · O – 2
60,6	60	66	27,6	P + 2 · O – 2
	150	81	20,1	
–	30	55	–	P + 2 · O – 2
58	60	66	25	P + 2 · O – 2
	150	81	17,5	
44	150	81	3,5	P + 2 · O – 2
63	150	81	22,5	P + 2 · O – 2
	300	110	8	
88	800	133	21,5	P + 2 · O – 2

Intermediate shaft coupling

Elastomer design
Backlash-free

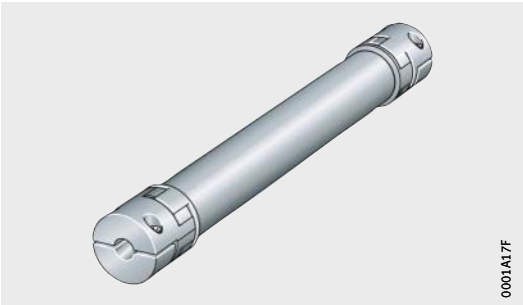

KUP-EZ2-ZW

Dimension table · Dimensions in mm

Designation	Mass[1]		Dimensions								
	Shaft m ≈kg/mm	Both couplings M ≈kg	A_{min}	A_{max}	$\varnothing B_1$	$\varnothing B_2$	$\varnothing B_5$	C	E	Tightening torque Nm	F
KUP-EZ2-ZW-10-A-10H7/10H7	0,0009	0,08	95	4 000	32	28	32	20	4×M4	4	10,5
KUP-EZ2-ZW-10-A-12H7/12H7		0,09									
KUP-EZ2-ZW-60-A-20H7/20H7	0,003	0,52	175	4 000	56	50	57	40	4×M6	15	21
KUP-EZ2-ZW-150-A-20H7/20H7	0,004	0,88	200	4 000	66,5	60	68	47	4×M8	35	24
KUP-EZ2-ZW-150-A-25H7/25H7		0,84									
KUP-EZ2-ZW-150-A-32H7/32H7		0,76									
KUP-EZ2-ZW-300-A-32H7/32H7	0,005	1,44	245	4 000	82	76	85	55	4×M10	70	29
KUP-EZ2-ZW-800-A-50H7/50H7	0,011	16	320	4 000	136,5	120	139	79	4×M16	290	50,5

1) Calculation of total mass, see page 853.
2) Calculation of maximum shaft offset, see page 852.
3) P is the distance between the shaft end faces.

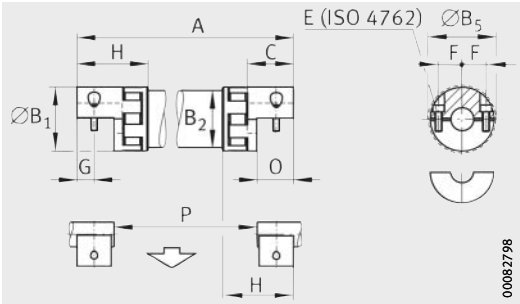

KUP-EZ2-ZW · Mounting length

			Performance data								Mounting length A[3)]
G	H	O	Torsional rigidity		Mass moment of inertia		Maximum shaft offset[2)]			n_{max}	
			Both couplings C_T^B kNm/rad	Shaft C_T^{ZWR} kNm/(rad · m)	Both coupling parts $J_{1,2}$ kg · cm²	Shaft J_3 kg · cm²/m	ΔL_{Kr} For ΔK_r[2)] mm	ΔK_w °	ΔK_a mm	min⁻¹	
7,5	34	16,6	0,27	0,32	0,1	0,75	52	≈2	2	1 500	P + 2 · O – 20
											P + 2 · O – 2
15	63	32	3,97	6,63	1,5	6,6	98	≈2	3	1 500	P + 2 · O – 4
17,5	73	37	6,7	11,81	2,1	11,8	114	≈2	4	1 500	P + 2 · O – 2
20	86	42	11,85	20,23	10,2	24,8	134	≈2	4	1 500	P + 2 · O – 2
30	125	62	41,3	392,8	170	380	188	≈2	6	1 500	P + 2 · O – 2

Intermediate shaft coupling

Metallic bellows design
Backlash-free

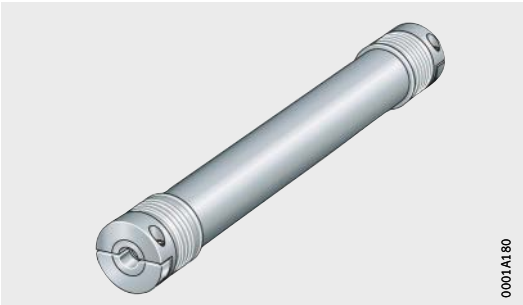

KUP-EAZ-ZW

Dimension table · Dimensions in mm

Designation	Mass[1]		Dimensions									
	Shaft m ≈kg/mm	Both couplings M ≈kg	A_{min}	A_{max}	∅B	C	∅$D_{1,2}$	E	Tightening torque Nm	F	G	H
KUP-EAZ-ZW-10-10H7/10H7	0,002	0,12	100	6 000	40	16	10	M4	5	15	5	39,5
KUP-EAZ-ZW-10-12H7/12H7		0,11					12					
KUP-EAZ-ZW-30-20H7/20H7	0,003	0,3	130	6 000	55	27	20	M6	15	19	7,5	52
KUP-EAZ-ZW-60-20H7/20H7	0,004	0,58	160	6 000	66	31	20	M8	40	23	9,5	64
KUP-EAZ-ZW-150-20H7/20H7	0,005	2,68	180	6 000	81	34,5	20	M10	70	27	12	72
KUP-EAZ-ZW-150-25H7/25H7		2,52					25					
KUP-EAZ-ZW-150-32H7/32H7		2,24					32					
KUP-EAZ-ZW-300-32H7/32H7	0,009	6	240	6 000	110	42	32	M12	130	39	14	83
KUP-EAZ-ZW-800-50H7/50H7	0,11	8,72	250	6 000	133	47	50	M16	250	48	19	95

1) Calculation of total mass, see page 853.
2) Calculation of maximum shaft offset, see page 852.
3) P is the distance between the shaft end faces.

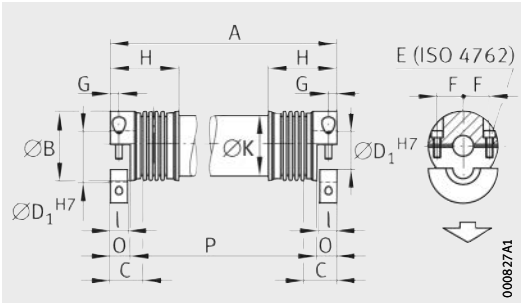

KUP-EAZ-ZW · Mounting length

			Performance data								Mounting length A[3]
l	ØK	O	Torsional rigidity		Mass moment of inertia		Maximum shaft offset[2]			n_{max}	
			Both bellows bodies C_T^B	Shaft C_T^{ZWR}	Both coupling parts $J_{1,2}$	Shaft J_3	ΔL_{Kr} For ΔK_r[2]	ΔK_w	ΔK_a		
			kNm/rad	kNm/(rad · m)	kg · cm²	kg · cm²/m	mm	°	mm	min⁻¹	
10	35	11,5	4,53	1,53	0,08	1,8	50	≈2	2	1 500	P + 2 · O – 10
											P + 2 · O – 2
15	50	17	19,5	6,63	0,7	6,6	68	≈2	2	1 500	P + 2 · O – 2
19	60	21	38	11,81	1,1	11,8	82	≈2	3	1 500	P + 2 · O – 2
22	76	24	87,5	20,23	12,5	24,8	94	≈2	4	1 500	P + 2 · O – 2
28	100	30	250,5	222,7	42,5	218	112	≈2	4	1 500	P + 2 · O – 2
37,5	120	40	475	392,8	121,5	380	128	≈2	6	1 500	P + 2 · O – 2

Addresses

Algeria

Schaeffler Technologies GmbH & Co. KG
Georg-Schäfer-Straße 30
97421 Schweinfurt
Germany
Tel. +(49) 9721 91-0
Fax +(49) 9721 91-3435
faginfo@schaeffler.com

Angola

Schaeffler Technologies GmbH & Co. KG
Georg-Schäfer-Straße 30
97421 Schweinfurt
Germany
Tel. +(49) 9721 91-0
Fax +(49) 9721 91-3435
faginfo@schaeffler.com

Antigua and Barbuda

FAG Interamericana
2655 Le Jeune Rd.
Gable International Plaza
Suite #319
Coral Gables, FL 33134
USA
Tel. +(1) 305 779 4807
Fax +(1) 305 779 4808
Alejandro.Troetsch@schaeffler.com

Argentina

Schaeffler Argentina S.R.L.
Av. Alvarez Jonte 1938
C1416EXR Buenos Aires
Tel. +(54) 11 / 40 16 15 00
Fax +(54) 11 / 45 82 33 20
info-ar@schaeffler.com

Armenia

Schaeffler Ukraine GmbH
Zhylyanskaya Str. 75, 5. Stock,
Businesscenter «Eurasia»
01032 Kiew
Ukraine
Tel. +(380) 44 520 13 80
Fax +(380) 44 520 13 81
info.ua@schaeffler.com

Australia

Schaeffler Australia Pty Ltd
Level 1, Bldg 8, Forest Central
Business Park
49 Frenchs Forest Road
Frenchs Forst, NSW 2086
Tel. +(61) 2 8977 1000
Fax +(61) 2 9452 4242
sales.au@schaeffler.com

Schaeffler Australia Pty Limited
Suite 14, Level 3
74 Doncaster Road
North Balwyn, VIC 3104
Tel. +(61) 3 9859 8020
Fax +(61) 3 9859 8767
milos.grujic@schaeffler.com

Schaeffler Australia Pty Ltd
Unit 3, 47 Steel Place
Morningside, QLD 4170
Tel. +(61) 7 3399 9161
Fax +(61) 7 3399 9351
martin.grosvenor@schaeffler.com

Schaeffler Australia Pty Ltd
2/188 Fullarton Road
Dulwich, SA 5065
Tel. +(61) 8 8366 0704
Fax +(61) 8 8331 0755
www.schaeffler.com.au

Schaeffler Australia Pty
3 /54 Kewdale Road
Welshpool, WA 6106
Tel. +(61) 8 6254 1000
Fax +(61) 8 6254 1010
jeff.gordon@schaeffler.com

Austria

Schaeffler Austria GmbH
Ferdinand-Pölzl-Straße 2
2560 Berndorf-St. Veit
Tel. +(43) 2672 202-0
Fax +(43) 2672 202-1003
info.at@schaeffler.com

Azerbaijan

Schaeffler Russland GmbH
Leningradsky Prospekt 47, Bau 3
Business-Center Avion
125167 Moscow
Russia
Tel. +(7) 495 7 37 76 60
Fax +(7) 495 7 37 76 61
info.ru@schaeffler.com

Bahamas

FAG Interamericana
2655 Le Jeune Rd.
Gable International Plaza
Suite #319
Coral Gables, FL 33134
USA
Tel. +(1) 305 779 4807
Fax +(1) 305 779 4808
Alejandro.Troetsch@schaeffler.com

Bahrain

Schaeffler Middle East FZE
Road SE101, Schaeffler Building
Jebel Ali Free Zone – Southside
Postbox 261808
Dubai UAE
United Arab Emirates
Tel. +(971) 4 81 44 500
Fax +(971) 4 81 44 601
info.ae@schaeffler.com

Bangladesh

Schaeffler Technologies GmbH & Co. KG
Georg-Schäfer-Straße 30
97421 Schweinfurt
Germany
Tel. +(49) 9721 91-0
Fax +(49) 9721 91-3435
faginfo@schaeffler.com

Barbados

FAG Interamericana
2655 Le Jeune Rd.
Gable International Plaza
Suite #319
Coral Gables, FL 33134
USA
Tel. +(1) 305 779 4807
Fax +(1) 305 779 4808
Alejandro.Troetsch@schaeffler.com

Belarus

Schaeffler Technologies GmbH & Co. KG
Repräsentanz Weißrussland
Odoewskogo 117, office 317
220015 Minsk
Tel. +(375) 17 269 94 81
Fax +(375) 17 269 94 82
info.by@schaeffler.com

Belgium

Schaeffler Belgium S.P.R.L./B.V.B.A.
Avenue du Commerce, 38
1420 Braine L'Alleud
Tel. +(32) 2 3 89 13 89
Fax +(32) 2 3 89 13 99
info.be@schaeffler.com

Belize

FAG Interamericana
2655 Le Jeune Rd.
Gable International Plaza
Suite #319
Coral Gables, L 33134
USA
Tel. +(1) 305 779 4807
Fax +(1) 305 779 4808
Alejandro.Troetsch@schaeffler.com

Benin

Schaeffler Technologies GmbH & Co. KG
Georg-Schäfer-Straße 30
97421 Schweinfurt
Germany
Tel. +(49) 9721 91-0
Fax +(49) 9721 91-3435
faginfo@schaeffler.com

Bhutan

Schaeffler Technologies GmbH & Co. KG
Georg-Schäfer-Straße 30
97421 Schweinfurt
Germany
Tel. +(49) 9721 91-0
Fax +(49) 9721 91-3435
faginfo@schaeffler.com

Bolivia

Schaeffler Chile Ltda.
Jose Tomas Rider 1051
Providencia
7501037 Santiago
Chile
Tel. +(56) 2 477 5000
Fax +(56) 2 435 9079
sabine.heijboer@schaeffler.com

Bosnia-Herzegovina

Schaeffler Hrvatska d.o.o.
Ogrizovićeva 28b
10000 Zagreb
Croatia
Tel. +(385) 1 37 01 943
Fax +(385) 1 37 64 473
info.hr@schaeffler.com

Botswana

Schaeffler Technologies GmbH & Co. KG
Georg-Schäfer-Straße 30
97421 Schweinfurt
Germany
Tel. +(49) 9721 91-0
Fax +(49) 9721 91-3435
faginfo@schaeffler.com

Brazil

Schaeffler Brasil Ltda.
Av. Independência, 3500-A
Bairro Éden
18087-101 Sorocaba, SP
Tel. 0800 11 10 29
Fax +(55) 1533 35 19 60
sac.br@schaeffler.com

Bulgaria

Schaeffler Bulgaria OOD
Dondukov-Blvd. No 62
Eing. A, 6. Etage, App. 10
1504 Sofia
Tel. +(359) 2 946 3900
+(359) 2 943 4008
Fax +(359) 2 943 4134
info.bg@schaeffler.com

Burkina Faso

Schaeffler Technologies GmbH & Co. KG
Georg-Schäfer-Straße 30
97421 Schweinfurt
Germany
Tel. +(49) 9721 91-0
Fax +(49) 9721 91-3435
faginfo@schaeffler.com

Burundi

Schaeffler Technologies GmbH & Co. KG
Georg-Schäfer-Straße 30
97421 Schweinfurt
Germany
Tel. +(49) 9721 91-0
Fax +(49) 9721 91-3435
faginfo@schaeffler.com

Canada

Schaeffler Canada Inc.
100 Alexis Nihon Suite 390
Montréal, QC H4M 2N8
Tel. +(1) 514-748-5111
800-361-5841 Toll Free
Fax +(1) 514-748-6111
info.ca@schaeffler.com

Schaeffler Canada Inc.
2871 Plymouth Drive
Oakville, ON L6H 5S5
Tel. +(1) 905-829-2750
800-263-4397 Toll Free
Fax +(1) 905-829-2563
info.ca@schaeffler.com

Schaeffler Canada Inc.
#106, 7611 Sparrow Drive
Leduc, AB T9E 0H3
Tel. +(1) 780-980-3016
800-663-9006 Toll Free
Fax +(1) 780-980-3037
info.ca@schaeffler.com

Schaeffler Group USA Inc.
5370 Wegman Drive
Valley City, OH 44280-9700
USA
Tel. 800 / 274 5001
Fax +(1) 330 / 273 3522
luk-ina-fag-as.us@schaeffler.com

Central African Republic

Schaeffler Technologies GmbH & Co. KG
Georg-Schäfer-Straße 30
97421 Schweinfurt
Germany
Tel. +(49) 9721 91-0
Fax +(49) 9721 91-3435
faginfo@schaeffler.com

Chad

Schaeffler Technologies GmbH & Co. KG
Georg-Schäfer-Straße 30
97421 Schweinfurt
Germany
Tel. +(49) 9721 91-0
Fax +(49) 9721 91-3435
faginfo@schaeffler.com

Chile

Schaeffler Chile Rodamientos Ltda.
Jose Tomas Rider 1051
Providencia
7501037 Santiago
Tel. +(56) 2 477 5000
info-cl@schaeffler.com

China

Schaeffler Holding (China) Co., Ltd.
No. 1 Antuo Road
(west side of Anhong Road)
AnTing, JiaDing District
201804 Shanghai
Tel. +(86) 21 3957 6666
Fax +(86) 21 3957 6600
info_china@schaeffler.com

Schaeffler Trading (Shanghai) Co., Ltd
Industrial Service(F'IS)
No. 1 An Tuo Road
AnTing, JiaDing District
201804 Shanghai
Tel. +(86) 21 3957 6500
Fax +(86) 21 3957 6600
zzSTS-Industrial-Service@
schaeffler.com

Schaeffler Hong Kong Co., Ltd.
Unit 3404-5 34/Floor,
Tower One Lippo Center
89 Queensway
Hong Kong
Tel. +(85) 2 2371 2680
Fax +(85) 2 2371 2680
sales_hk@cn.fag.com

Schaeffler Trading (Shanghai) Co., Ltd.
Taiyuan Office
Room 1209, 12th Floor,
Shanxi International Trade Center
West Tower
No 69 Fuxi Street
030002 Taiyuan, Shanxi
Tel. +(86) 351 8689260
Fax +(86) 351 8689261
info.cn-taiyuan@Schaeffler.com

Schaeffler Trading (Shanghai) Co., Ltd.
Shenyang Office
Unit H/I 14 Floor,
Huaxin International Tower
No.219 Qingnian Avenue,
Shenhe District
110016 Shenyang, Liaoning
Tel. +(86) 24 23962633
Fax +(86) 24 23962533
info.cn-shenyang@Schaeffler.com

Schaeffler Trading (Shanghai) Co., Ltd.
Dalian Office
Unit 31F/05, Xiwang Tower
136 Zhongshan Road
116011 Dalian, Liaoning
Tel. +(86) 411 83681011
Fax +(86) 411 83681012
info.cn-dalian@Schaeffler.com

Schaeffler Trading (Shanghai) Co., Ltd.
Harbin Office
Unit G 21F, Always Development Plaza
No. 15 Hongjun Street, Nangang
150001 Harbin
Tel. +(86) 451 53009368
Fax +(86) 451 53009370
www.schaeffler.cn

Schaeffler Trading (Shanghai) Co., Ltd.
Shanghai Office
No. 1 Antuo Road
(west side of Anhong Road)
Anting, Jiading District
201804 Shanghai
Tel. +(86) 21 3957 6500
Fax +(86) 21 3959 3205
info.cn-shanghai@Schaeffler.com

Schaeffler Trading (Shanghai) Co., Ltd.
Nanjing Office
33-G,H, Nanjing IFC,
1 Hanzhong Road, Baixia District
210005 Nanjing, Jiangsu
Tel. +(86) 25 8312 3070
Fax +(86) 25 8312 3072
info.cn-nanjing@Schaeffler.com

Schaeffler Trading (Shanghai) Co., Ltd.
Jinan Office
Room 430, CITIC Plaza
No. 150 Luoyuan Avenue
250011 Ji'nan, Shandong
Tel. +(86) 531 8518 0435
Fax +(86) 531 8518 0438
info.cn-jinan@Schaeffler.com

Schaeffler Trading (Shanghai) Co., Ltd.
Hangzhou Office
Room 1507, Jiahua International
Business Center
No. 15, Hangda Road
310007 Hangzhou, Zhejiang
Tel. +(86) 571 8717 4820/21/22/30
Fax +(86) 571 8717 4833
info_cn-hangzhou@schaeffler.com

Addresses

Schaeffler Trading (Shanghai) Co., Ltd.
Chongqing Office
9-2 Future International Building, No. 6
1st Branch
Jianxin North Road, Jiangbei District
400200 Chongqing
Tel. +(86) 23 67755574
Fax +(86) 23 67755524
info.cn-chongqing@Schaeffler.com

Schaeffler Trading (Shanghai) Co., Ltd.
Changsha Office
Room 1602, Yunda International Square
No. 478 Rurong Mid.Rd
410001 Changsha, Hunan
Tel. +(86) 731 85139138
Fax +(86) 731 85467042
info.cn-changsha@Schaeffler.com

Schaeffler Trading (Shanghai) Co., Ltd.
Wuhan Office
Room 3015, New World International
Trade Center
No 568 Jianshe Avenue,
Jianghan District
430022 Wuhan, Hubei
Tel. +(86) 27 8526 7335
Fax +(86) 27 8526 7339
info.cn-wuhan@Schaeffler.com

Schaeffler Trading (Shanghai) Co., Ltd.
Zhengzhou Office
Room 2007, 20F
No.226 Jinshui Rd.
Kineer International Mansion
450008 Zhengzhou, Henan
Tel. +(86) 371 86110766
Fax +(86) 371 86110799
info.cn-zhengzhou@schaeffler.com

Schaeffler Trading (Shanghai) Co., Ltd.
Guangzhou Office
Room 2906-2908,
Goldlion Digital Network Centre
No. 138 East Tiyu Road
510620 Guangzhou, Guangdong
Tel. +(86) 20 3878 1467
Fax +(86) 20 8761 0032
www.schaeffler.cn

Schaeffler Trading (Shanghai) Co., Ltd.
Chengdu Office
Room 2815, CCB Sichuan Building
No 88 Tidu Street
610016 Chengdu, Sichuan
Tel. +(86) 28 8676 6718
Fax +(86) 28 8676 6728
info.cn-chengdu@Schaeffler.com

Schaeffler Trading (Shanghai) Co., Ltd.
Xi'an Office
Room 1202, HIBC
No 33 Keji Road, Hi-tech Zone Xi'an City
710075 Xi'an, Shaanxi
Tel. +(86) 29 88337696 99
Fax +(86) 29 88337707
info.cn-xian@Schaeffler.com

Schaeffler (China) Co., Ltd.
18 Chaoyang Road, Taicang
Jiangsu Province
215400 Taicang , Jiangsu
Tel. +(86) 512 5395 7700
Fax +(86) 512 5357 4064
www.schaeffler.cn

Colombia

Schaeffler Colombia Ltda.
Cra. 10 N° 97A 13 Torre A
Ofic 209 Bogotá Trade Center
Bogotá
Tel. +(57) 1 621 53 00
Fax +(57) 1 621 03 22
info-co@schaeffler.com

Costa Rica

INA México, S.A. de C.V. -
Rodamientos FAG, S.A. de C.V.
Henry Ford #141
Col. Bondojito
Deleg. Gustavo A. Madero
07850 Mexico D.F.
Mexico
Tel. +(52) 55 5062 6085
Fax +(52) 55 5739 5850
distr.indl.mx@schaeffler.com

Croatia

Schaeffler Hrvatska d.o.o.
Ogrizovićeva 28b
10000 Zagreb
Tel. +(385) 1 37 01 943
Fax +(385) 1 37 64 473
info.hr@schaeffler.com

Cuba

INA México, S.A. de C.V.
Rodamientos FAG, S.A. de C.V.
Henry Ford #141
Col. Bondojito
Deleg. Gustavo A. Madero
07850 Mexico D.F.
Mexico
Tel. +(52) 55 5062 6085
Fax +(52) 55 5739 5850
distr.indl.mx@schaeffler.com

Czech Republic

Schaeffler CZ s.r.o.
Průběžná 74a
100 00 Praha 10
Tel. +(420) 267 298 111
Fax +(420) 267 298 110
info.cz@schaeffler.com

Denmark

Schaeffler Danmark ApS
Jens Baggesens Vej 90P
8200 Aarhus N
Tel. +(45) 70 15 44 44
Fax +(45) 70 15 22 02
info.dk@schaeffler.com

Djibouti

Schaeffler Technologies GmbH & Co. KG
Georg-Schäfer-Straße 30
97421 Schweinfurt
Germany
Tel. +(49) 9721 91-0
Fax +(49) 9721 91-3435
faginfo@schaeffler.com

Dominica

FAG Interamericana
2655 Le Jeune Rd.
Gable International Plaza
Suite #319
Coral Gables, FL 33134
USA
Tel. +(1) 305 779 4807
Fax +(1) 305 779 4808
Alejandro.Troetsch@schaeffler.com

Ecuador

Schaeffler Colômbia Ltda.
Cra. 10 N° 97A 13 Torre A
Ofic 209 Bogotá Trade Center
Bogotá
Colombia
Tel. +(57) 1 621 53 00
Fax +(57) 1 621 03 22

REPRESENTACIONES ARCOS S.A.
Calle 93 Bis No. 19-40, Of. 403
Bogotá
Colombia
Tel. +(57) 1 / 6 18 51 31
Fax +(57) 1 / 6 35 96 73
arcoscol@latino.net.co

Egypt

Delegation Office
Schaeffler Technologies
25, El Obour Buildings – Floor 18 – Flat 4
Salah Salem St.
11371 Cairo
Tel. +(20) 2 24012432
Fax +(20) 2 22612637
schaeffleregypt@schaeffleregypt.com

El Salvador

INA México, S.A. de C.V. -
Rodamientos FAG, S.A. de C.V.
Henry Ford #141
Col. Bondojito
Deleg. Gustavo A. Madero
07850 Mexico D.F.
Mexico
Tel. +(52) 55 5062 6085
Fax +(52) 55 5739 5850
distr.indl.mx@schaeffler.com

Equatorial Guinea

Schaeffler Technologies GmbH & Co. KG
Georg-Schäfer-Straße 30
97421 Schweinfurt
Germany
Tel. +(49) 9721 91-0
Fax +(49) 9721 91-3435
faginfo@schaeffler.com

Eritrea

Schaeffler Technologies GmbH & Co. KG
Georg-Schäfer-Straße 30
97421 Schweinfurt
Germany
Tel. +(49) 9721 91-0
Fax +(49) 9721 91-3435
faginfo@schaeffler.com

Estonia

Schaeffler Technologies
Repräsentanz Baltikum
Duntes iela 23a
1005 Riga
Latvia
Tel. +(371) 67 06 37 95
Fax +(371) 67 06 37 96
info.lv@schaeffler.com

Ethiopia

Schaeffler Technologies GmbH & Co. KG
Georg-Schäfer-Straße 30
97421 Schweinfurt
Germany
Tel. +(49) 9721 91-0
Fax +(49) 9721 91-3435
faginfo@schaeffler.com

Fiji

Schaeffler New Zealand
(Unit R, Cain Commercial Centre)
20 Cain Road
1135 Penrose
New Zealand
Tel. +(64) 9 583 1280
+(64) 021 324 247
(Call out fee applies)
Fax +(64) 9 583 1288
sales.nz@schaeffler.com

Finland

Schaeffler Finland Oy
Lautamiehentie 3
02770 Espoo
Tel. +(358) 207 36 6204
Fax +(358) 207 36 6205
info.fi@schaeffler.com

France

Schaeffler France SAS
93, route de Bitche, BP 30186
67506 Haguenau
Tel. +(33) 3 88 63 40 40
Fax +(33) 3 88 63 40 41
info.fr@schaeffler.com

Gabon

Schaeffler Technologies GmbH & Co. KG
Georg-Schäfer-Straße 30
97421 Schweinfurt
Germany
Tel. +(49) 9721 91-0
Fax +(49) 9721 91-3435
faginfo@schaeffler.com

Gambia

Schaeffler Technologies GmbH & Co. KG
Georg-Schäfer-Straße 30
97421 Schweinfurt
Germany
Tel. +(49) 9721 91-0
Fax +(49) 9721 91-3435
faginfo@schaeffler.com

Georgia

Schaeffler Russland GmbH
Leningradsky Prospekt 47, Bau 3
Business-Center Avion
125167 Moscow
Russia
Tel. +(7) 495 7 37 76 60
Fax +(7) 495 7 37 76 61
info.ru@schaeffler.com

Germany

Schaeffler Technologies GmbH & Co. KG
Industriestraße 1 – 3
91074 Herzogenaurach
Tel. +(49) 9132 82-0
Fax +(49) 9132 82-4950
info.de@schaeffler.com

Schaeffler Technologies GmbH & Co. KG
Georg-Schäfer-Str. 30
97421 Schweinfurt
Tel. +(49) (9721) 91-0
Fax +(49) (9721) 91-3435
faginfo@schaeffler.com

Schaeffler Technologies GmbH & Co. KG
Geschäftsbereich Lineartechnik
Berliner Straße 134
66424 Homburg (Saar)
Tel. +(49) 6841 701-0
Fax +(49) 6841 701-2625
info.linear@schaeffler.com

INA – Drives & Mechatronics
GmbH & Co. KG
Mittelbergstraße 2
98527 Suhl
Tel. +(49) 3681 7574-43

Ghana

Schaeffler Technologies GmbH & Co. KG
Georg-Schäfer-Straße 30
97421 Schweinfurt
Germany
Tel. +(49) 9721 91-0
Fax +(49) 9721 91-3435
faginfo@schaeffler.com

Guatemala

INA México, S.A. de C.V. -
Rodamientos FAG, S.A. de C.V.
Henry Ford #141
Col. Bondojito
Deleg. Gustavo A. Madero
07850 Mexico D.F.
Mexico
Tel. +(52) 55 5062 6085
Fax +(52) 55 5739 5850
distr.indl.mx@schaeffler.com

Guinea

Schaeffler Technologies GmbH & Co. KG
Georg-Schäfer-Straße 30
97421 Schweinfurt
Germany
Tel. +(49) 9721 91-0
Fax +(49) 9721 91-3435
faginfo@schaeffler.com

Guinea-Bissau

Schaeffler Technologies GmbH & Co. KG
Georg-Schäfer-Straße 30
97421 Schweinfurt
Germany
Tel. +(49) 9721 91-0
Fax +(49) 9721 91-3435
faginfo@schaeffler.com

Haiti

FAG Interamericana
2655 Le Jeune Rd.
Gable International Plaza
Suite #319
Coral Gables, FL 33134
USA
Tel. +(1) 305 779 4807
Fax +(1) 305 779 4808
Alejandro.Troetsch@schaeffler.com

Honduras

INA México, S.A. de C.V. -
Rodamientos FAG, S.A. de C.V.
Henry Ford #141
Col. Bondojito
Deleg. Gustavo A. Madero
07850 Mexico D.F.
Mexico
Tel. +(52) 55 5062 6085
Fax +(52) 55 5739 5850
distr.indl.mx@schaeffler.com

Hungary

Schaeffler Magyarország Ipari Kft.
Rétköz u.5
1118 Budapest
Tel. +(36) 1 4 81 30 50
Fax +(36) 1 4 81 30 53
budapest@schaeffler.com

Iceland

Schaeffler Technologies GmbH & Co. KG
Georg-Schäfer-Str. 30
97421 Schweinfurt
Germany
Tel. +(49) (9721) 91-0
Fax +(49) (9721) 91-3435
faginfo@schaeffler.com

India

FAG Bearings India Limited
Lodhi Tower, Mall Road
Ludhiana
Tel. +(91) 9779010791
info.fag.delhi@schaeffler.com

FAG Bearings India Limited
B-1504, Statesman House,
148, Barakhamba Road
New Dehli 110 001
Tel. +(91) 11 237382-77/-78
+(91) 11 415214-76/-77
Fax +(91) 11 515214-78
info.fag.delhi@schaeffler.com

INA Bearings India Pvt. Ltd.
Gahlot Farm House,
Opposite House No. 525
Sector-47, Haryana
Gurgaon 122001
Tel. +(91) 12 44160600
rajeev.kaushik@schaeffler.com

Addresses

FAG Bearings India Limited
201, Kan Chamber, Civil Lines
Kanpur 208001
info.fag.delhi@schaeffler.com

FAG Bearings India Limited
203, Riddhi Siddhi Complex
Madhban
Udaipur 313 001
Tel. +(91) 29 4320 5482
info.fag.udaipur@schaeffler.com

FAG Bearings India Limited
Maneja
Vadodara 390 013
Tel. +(91) 26 52 6426-51
Fax +(91) 26 52 6388-04/-10
info.fag.in@schaeffler.com

FAG Bearings India Limited
Nariman Bhavan, 8th Floor, 227,
Backbay Reclamation Nariman Point
Mumbai 400 021
Tel. +(91) 22 6681-4444
Fax +(91) 22 2202 7022
info.fag.mumbai@schaeffler.com

FAG Bearings India Limited
101 & 103 - Akshay Complex –
Dhole Patil Road
Pune 411 011
Tel. +(91) 20 2612 2272
Fax +(91) 20 2612 2229
info.fag.pune@schaeffler.com

FAG Bearings India Limited
Flat No. 102, Sai Mitra Constructions,
Door No. 10-3-55/1, Street No. 4,
Lane 1 East Marredpally
Secunderabad 500 026
Tel. +(91) 40 42624150
Fax +(91) 40 40250256
info.fag.scd@schaeffler.com

FAG Bearings India Limited
18, Gr. Floor, Wst View
77, R.V. Road, Basavanagudi
Bangalore 560 004
Tel. +(91) 80 2657-5120
Fax +(91) 80 2657-4866
info.fag.bangalore@schaeffler.com

INA Bearings India Pvt. Ltd.
Site No. 1, Sri Nrusimha Towers,
First Floor,
Amruthnagar Main Road
Next to Sub-registrar's Office,
Konanakunte
Bangalore 560 062
Tel. +(91) 80 4260 6999
Fax +(91) 80 4260 6922
Sales.bangalore@schaeffler.com

FAG Bearings India Limited
710, 7th Floor, Phase II
Spencer Plaza
769 - Anna Salai
Chennai 600 002
Tel. +(91) 44 28 4935-82/-83/-84/-85
Fax +(91) 44 284975-77
info.fag.chennai@schaeffler.com

FAG Bearings India Limited
Flat No.10, 3rd Floor,
Krishnakamalam Pride Complex
391/392, Bharathiar Road
Coimbatore 641 004
Tel. +(91) 42 2252 8220
+(91) 42 2421 0080
info.fag.cbe@schaeffler.com

FAG Bearings India Limited
Jasmine Towers, 5th Floor
Room No. 502B, 31
Shakespeare Sarani
Kolkata 700 017
Tel. +(91) 33 22 8900-26/-27
+(91) 33 22 8332-27
Fax +(91) 33 22 89 00-97
info.fag.kolkata@schaeffler.com

INA Bearings India Pvt. Ltd.
369, Block 'K' 2nd Floor
New Alipore
Kolkata 700 053
Tel. +(91) 33 4060 8051
Fax +(91) 33 4060 8052
chanchal.khan@schaeffler.com

FAG Bearings India Limited
No. 308, 3rd Floor
Akashdeep Plaza, Golmuri
Jamshedpur 831 003
Tel. +(91) 65 7234 1186
info.fag.jmd@schaeffler.com

INA Bearings India Pvt. Ltd.
Plot No. A-3 Talegaon Industrial &
Floriculture Park
Village Ambi, Navalakha Umbre,
Taluka Maval
Pune 410 507
Tel. +(91) 20 3061 4100
Fax +(91) 20 3061 4308
info.in@schaeffler.com

LuK India Private Ltd.
P.B. No. 20, Royakottah Road
Hosur 635 109
Tel. +(91) 4344 222313
Fax +(91) 4344 222296
luk-oe.in@schaeffler.com

Iran

Schaeffler Technologies GmbH & Co. KG
Georg-Schäfer-Str. 30
97421 Schweinfurt
Germany
Tel. +(49) (9721) 91-0
Fax +(49) (9721) 91-3435
faginfo@schaeffler.com

Iraq

Schaeffler Technologies GmbH & Co. KG
Georg-Schäfer-Straße 30
97421 Schweinfurt
Germany
Tel. +(49) 9721 91-0
Fax +(49) 9721 91-3435
faginfo@schaeffler.com

Israel

Schaeffler Israel Ltd.
5 Ha'Karmel St.20692
Yokneam Illit
Tel. +972 4 8114146
Fax +972 4 8114103
david.rechler@schaeffler.com

Italy

Schaeffler Italia S.r.l.
Via Dr. Georg Schaeffler, 7
28015 Momo (Novara)
Tel. +(39) 3 21 92 92 11
Fax +(39) 3 21 92 93 00
info.it@schaeffler.com

Ivory Coast

Schaeffler Technologies GmbH & Co. KG
Georg-Schäfer-Straße 30
97421 Schweinfurt
Germany
Tel. +(49) 9721 91-0
Fax +(49) 9721 91-3435
faginfo@schaeffler.com

Japan

Schaeffler Japan Co., Ltd.
New Stage Yokohama 1-1-32
Shinurashima-cho
221-0031 Yokohama
Tel. +(81) 45 274 8211
Fax +(81) 45 274 8221
info-japan@schaeffler.com

Korea

Schaeffler Korea Corporation
14F, Kyobo life insurance Bldg.
#1,Jongno-gu
Seoul, 110-714
Tel. +(82) 2 311-3440
Fax +(82) 505-073-2042
sangnam.lee@schaeffler.com

Schaeffler Korea Corporation –
Guro Office
A-501, 1258, Guro-dong, Guro-gu,
Seoul, 152-721
Tel. +(82) 2 2625-8572
Fax +(82) 2 2611-6075

Schaeffler Korea Corporation –
Busan Office (Changwon)
577-7, Gwaebeop-dong,
Sasang-gu,
Busan, 617-809
Tel. +(82) 51 328-9386
Fax +(82) 51 324-0382

Schaeffler Korea Corporation –
Seobu Office
402, 3-ga Palbok-dong, Deokjin-gu,
Jeonju-si, Jeollabuk-do, 561-724
Tel. +(82) 63 211-5770
Fax +(82) 63 211-5791

Schaeffler Korea Corporation –
Daegu Office
Shindongyeong Bldg., 17-1
Bukseongno 1-ga Jung-gu,
Daegu, 100-864
Tel. +(82) 53 256-4068
Fax +(82) 53 253-5229

Latvia

Schaeffler Technologies
Repräsentanz Baltikum
Duntes iela 23a
1005 Riga
Tel. +(371) 7 06 37 95
Fax +(371) 7 06 37 96
info.lv@schaeffler.com

Lesotho

Schaeffler South Africa (Pty.) Ltd.
1 End Street Ext. Corner Heidelberg Road
2000 Johannesburg
South Africa
Tel. +(27) 11 225 3000
Fax +(27) 11 334 1755
info.co.za@schaeffler.com

Liberia

Schaeffler Technologies GmbH & Co. KG
Georg-Schäfer-Straße 30
97421 Schweinfurt
Germany
Tel. +(49) 9721 91-0
Fax +(49) 9721 91-3435
faginfo@schaeffler.com

Libya

Schaeffler Technologies GmbH & Co. KG
Georg-Schäfer-Straße 30
97421 Schweinfurt
Germany
Tel. +(49) 9721 91-0
Fax +(49) 9721 91-3435
faginfo@schaeffler.com

Lithuania

Schaeffler Technologies
Repräsentanz Baltikum
Duntes iela 23a
1005 Riga
Latvia
Tel. +(371) 7 06 37 95
Fax +(371) 7 06 37 96
info.lv@schaeffler.com

Luxembourg

Schaeffler Belgium S.P.R.L./B.V.B.A.
Avenue du Commerce, 38
1420 Braine L'Alleud
Belgium
Tel. +(32) 2 3 89 13 89
Fax +(32) 2 3 89 13 99
info.be@schaeffler.com

Macedonia

Schaeffler Technologies GmbH & Co. KG
Georg-Schäfer-Straße 30
97421 Schweinfurt
Germany
Tel. +(49) 9721 91-0
Fax +(49) 9721 91-3435
faginfo@schaeffler.com

Madagascar

Schaeffler Technologies GmbH & Co. KG
Georg-Schäfer-Straße 30
97421 Schweinfurt
Germany
Tel. +(49) 9721 91-0
Fax +(49) 9721 91-3435
faginfo@schaeffler.com

Malawi

Schaeffler Technologies GmbH & Co. KG
Georg-Schäfer-Str. 30
97421 Schweinfurt
Germany
Tel. +(49) 9721 91-0
Fax +(49) 21 / 91-3347
faginfo@schaeffler.com

Malaysia

Schaeffler Bearings (Malaysia) Sdn. Bhd.
5-2 Wisma Fiamma, No. 20 Jalan 7A/62A
Bandar Menjalara
52200 Kuala Lumpur
Tel. +(60) 3-6275 0620
Fax +(60) 3 6275 6421
marketing_my@schaeffler.com

Schaeffler Bearings (Malaysia) Sdn. Bhd.
(Penang Branch)
No. B-02-28, 2nd Floor, Krystal Point
303, Jalan Sultan Azlan Shah
11900 Sungai Nibong
Tel. +(60) 4 642 3708/3781
Fax +(60) 4 642 3724

Maldives

Schaeffler Technologies GmbH & Co. KG
Georg-Schäfer-Straße 30
97421 Schweinfurt
Germany
Tel. +(49) 9721 91-0
Fax +(49) 9721 91-3435
faginfo@schaeffler.com

Mali

Schaeffler Technologies GmbH & Co. KG
Georg-Schäfer-Straße 30
97421 Schweinfurt
Germany
Tel. +(49) 9721 91-0
Fax +(49) 9721 91-3435
faginfo@schaeffler.com

Malta

Schaeffler Technologies GmbH & Co. KG
Georg-Schäfer-Straße 30
97421 Schweinfurt
Germany
Tel. +(49) 97 21 / 91-35 27
Fax +(49) 9721 91-3435
faginfo@schaeffler.com

Marshall Islands

Schaeffler New Zealand
(Unit R, Cain Commercial Centre)
20 Cain Road
1135 Penrose
New Zealand
Tel. +(64) 9 583 1280
+(64) 021 324 247
(Call out fee applies)
Fax +(64) 9 583 1288
sales.nz@schaeffler.com

Mauritania

Schaeffler Technologies GmbH & Co. KG
Georg-Schäfer-Straße 30
97421 Schweinfurt
Germany
Tel. +(49) 9721 91-0
Fax +(49) 9721 91-3435
faginfo@schaeffler.com

Mauritius

Schaeffler Technologies GmbH & Co. KG
Georg-Schäfer-Str. 30
97421 Schweinfurt
Germany
Tel. +(49) 9721 91-0
Fax +(49) 9721 91-3435
faginfo@schaeffler.com

Mexico

INA México, S.A. de C.V. -
Rodamientos FAG, S.A. de C.V.
Henry Ford #141
Col. Bondojito
Deleg. Gustavo A. Madero
07850 Mexico D.F.
Tel. +(52) 55 5062 6085
Fax +(52) 55 5739 5850
distr.indl.mx@schaeffler.com

Micronesia

Schaeffler New Zealand
(Unit R, Cain Commercial Centre)
20 Cain Road
1135 Penrose
New Zealand
Tel. +(64) 9 583 1280
+(64) 021 324 247
(Call out fee applies)
Fax +(64) 9 583 1288
sales.nz@schaeffler.com

Moldavia

Schaeffler Ukraine GmbH
Zhylyanskaya Str. 75, 5-er Stock
Businesscenter «Eurasia»
01032 Kiew
Ukraine
Tel. +(380) 44-520 13 80
Fax +(380) 44-520 13 81
info.ua@schaeffler.com

Mongolia

Schaeffler Hong Kong Co., Ltd.
Unit 3404-5, 34/Floor,
Tower One, Lippo Centre
No 89 Queensway
Hong Kong
China
Tel. +(852) 2371 2680
Fax +(852) 2371 2680
sales_hk@cn.fag.com

Morocco

Schaeffler Technologies GmbH & Co. KG
Georg-Schäfer-Straße 30
97421 Schweinfurt
Germany
Tel. +(49) 9721 91-0
Fax +(49) 9721 91-3435
faginfo@schaeffler.com

Mozambique

Schaeffler Technologies GmbH & Co. KG
Georg-Schäfer-Str. 30
97421 Schweinfurt
Germany
Tel. +(49) 9721 91-0
Fax +(49) 9721 91-3435
faginfo@schaeffler.com

Namibia

Schaeffler Technologies GmbH & Co. KG
Georg-Schäfer-Str. 30
97421 Schweinfurt
Germany
Tel. +(49) 9721 91-0
Fax +(49) 9721 91-3435
faginfo@schaeffler.com

Nauru

Schaeffler New Zealand
(Unit R, Cain Commercial Centre)
20 Cain Road
1135 Penrose
New Zealand
Tel. +(64) 9 583 1280
+(64) 021 324 247
(Call out fee applies)
Fax +(64) 9 583 1288
sales.nz@schaeffler.com

Nepal

Schaeffler Technologies GmbH & Co. KG
Georg-Schäfer-Straße 30
97421 Schweinfurt
Germany
Tel. +(49) 9721 91-0
Fax +(49) 9721 91-3435
faginfo@schaeffler.com

Netherlands

Schaeffler Nederland B.V.
Gildeweg 31
3771 NB Barneveld
Tel. +(31) 342 40 30 00
Fax +(31) 342 40 32 80
info.nl@schaeffler.com

New Zealand

Schaeffler New Zealand
(Unit R, Cain Commercial Centre)
20 Cain Road
1135 Penrose
Tel. +(64) 9 583 1280
+(64) 021 324 247
(Call out fee applies)
Fax +(64) 9 583 1288
sales.nz@schaeffler.com

Nicaragua

INA México, S.A. de C.V. -
Rodamientos FAG, S.A. de C.V.
Henry Ford #141
Col. Bondojito
Deleg. Gustavo A. Madero
07850 Mexico D.F.
Mexico
Tel. +(52) 55 5062 6085
Fax +(52) 55 5739 5850
distr.indl.mx@schaeffler.com

Niger

Schaeffler Technologies GmbH & Co. KG
Georg-Schäfer-Straße 30
97421 Schweinfurt
Germany
Tel. +(49) 9721 91-0
Fax +(49) 9721 91-3435
faginfo@schaeffler.com

Nigeria

Schaeffler Technologies GmbH & Co. KG
Georg-Schäfer-Straße 30
97421 Schweinfurt
Germany
Tel. +(49) 9721 91-0
Fax +(49) 9721 91-3435
faginfo@schaeffler.com

Norway

Schaeffler Norge AS
Grenseveien 107B
0663 Oslo
Tel. +(47) 23 24 93 30
Fax +(47) 23 24 93 31
info.no@schaeffler.com

Oman

Schaeffler Middle East FZE
Road SE101, Schaeffler Building
Jebel Ali Free Zone – Southside
Postbox 261808
Dubai UAE
United Arab Emirates
Tel. +(971) 4 81 44 500
Fax +(971) 4 81 44 601
info.ae@schaeffler.com

Pakistan

Schaeffler Technologies GmbH & Co. KG
Georg-Schäfer-Straße 30
97421 Schweinfurt
Germany
Tel. +(49) 9721 91-0
Fax +(49) 9721 91-3435
faginfo@schaeffler.com

Pakistan Liaison Office of
Schaeffler Technologies GmbH & Co. KG
B-11, KDA Sch # 1, Shahrah-e-Faisal
75350 Karachi
Tel. +(92) 21 3437 6041-2
Fax +(92) 21 3437 6043
Pakistan@Schaeffler.com

Palau

Schaeffler New Zealand
(Unit R, Cain Commercial Centre)
20 Cain Road
1135 Penrose
New Zealand
Tel. +(64) 9 583 1280
+(64) 021 324 247
(Call out fee applies)
Fax +(64) 9 583 1288
sales.nz@schaeffler.com

Panama

INA México, S.A. de C.V. -
Rodamientos FAG, S.A. de C.V.
Henry Ford #141
Col. Bondojito
Deleg. Gustavo A. Madero
07850 Mexico D.F.
Mexico
Tel. +(52) 55 5062 6085
Fax +(52) 55 5739 5850
distr.indl.mx@schaeffler.com

Papua-New Guinea

Schaeffler Australia Pty Ltd
Level 1, Bldg 8
Forest Central Business Park
49 Frenchs Forest Road
Frenchs Forest, NSW 2086
Australia
Tel. +(61) 2 89 77 10 00
Fax +(61) 2 94 52 42 42
sales.au@schaeffler.com

Paraguay

Schaeffler Brasil Ltda.
Av. Independência, 3500-A
Bairro Éden
18087-101 Sorocaba, SP
Brazil
Tel. 0800 11 10 29
Fax +(55) 15 33 35 19 60
sac.br@schaeffler.com

Perú

Schaeffler Perú S.A.C.
Av. José Pardo 513 - Of. 1101
Miraflores, Lima
Tel. +(51) 1 243 1303
info-pe@schaeffler.com

Philippines

Schaeffler Philippines Inc
5th Floor, Optima Building
221 Salcedo Street, Legaspi Village
1229 Makati City
Tel. +(63) 2 759 3583
Fax +(63) 2 759 3578
marketing_ph@schaeffler.com

Schaeffler Philippines Inc –
Branch Office
Unit A- 202, S.A Bldg.,
Plaridel St., Alang-Alang,
Mandaue City
Tel. +(63) 32 236 2404
Fax +(63) 32 344 3644

Poland

Schaeffler Polska Sp. z o.o.
Budynek E
ul. Szyszkowa 35/37
02-285 Warszawa
Tel. +(48) 22 8 78 41 20
Fax +(48) 22 8 78 41 22
info.pl@schaeffler.com

Portugal

INA Rolamentos Lda.
Arrábida Lake Towers
Rua Daciano Baptista Marques Torre C,
181, 2º piso
4400-617 Vila Nova de Gaia
Tel. +(351) 22 5 32 08 00
Fax +(351) 22 5 32 08 60
info.pt@schaeffler.com

Romania

S.C. Schaeffler Romania S.R.L.
Aleea Schaeffler Nr. 3
507055 Cristian/Brasov
Tel. +(40) 268 505000
Fax +(40) 268 505848
info.ro@schaeffler.com

Russia

Schaeffler Russland GmbH
Leningradsky Prospekt 47, Bau 3
Business-Center Avion
125167 Moscow
Tel. +(7) 495 7 37 76 60
Fax +(7) 495 7 37 76 61
info.ru@schaeffler.com

Schaeffler Russland GmbH -
Automotive Aftermarket
Leningradsky Prospekt 47, Bau 3
Business-Center Avion
125167 Moscow
Tel. +(7) 495 73776-60
Fax +(7) 495 73776 61
info.ru@schaeffler.com

Schaeffler Russland GmbH
Piskarevsky prospect, 2, build.3, letter A
Business-center "Benua", office 207
195027 St. Petersburg
Tel. +(7) 812 633 36 44
Fax +(7) 812 633 3645
info.spb@schaeffler.com

Schaeffler Russland GmbH
Ul. Gagarina 116, office 204
350000 Krasnodar
Tel. +(7) 861 219 53-18
Fax +(7) 861 219-53-18
lebeddit@schaeffler.com

Schaeffler Russland GmbH
ul. Clara Zetkin, 8, build 27/a,
office 421, BC "Admiraltejsky"
420030 Kazan
Tel. +(7) 843 511 46 12
Fax +(7) 843 511 46 12
gataursh@schaeffler.com

Schaeffler Russland GmbH
ul. Marshala Zhukova 35, Floor 4,
Office 5
445051 Togliatti
Tel. +(7) 8482 93 13 22
Fax +(7) 8482 93 13 29
info.volga@schaeffler.com

Schaeffler Russland GmbH
ul. Chelyuskincev, 2, floor 9, office 95,
BC "Micron"
620012 Ekaterinburg
Tel. +(7) 343 247 11 43
Fax +(7) 343 247 11 43
ekaterinburg@schaeffler.com

Schaeffler Russland GmbH
Oktyabr'skaya magistral, 2, office 808
630007 Nowosibirsk
Tel. +(7) 383 328 01 53
Fax +(7) 383 328 01 54
nowosibirsk@schaeffler.com

Rwanda

Schaeffler Technologies GmbH & Co. KG
Georg-Schäfer-Straße 30
97421 Schweinfurt
Germany
Tel. +(49) 9721 91-0
Fax +(49) 9721 91-3435
faginfo@schaeffler.com

Samoa

Schaeffler New Zealand
(Unit R, Cain Commercial Centre)
20 Cain Road
1135 Penrose
New Zealand
Tel. +(64) 9 583 1280
+(64) 021 324 247
(Call out fee applies)
Fax +(64) 9 583 1288
sales.nz@schaeffler.com

São Tomé and Príncipe

Schaeffler Technologies GmbH & Co. KG
Georg-Schäfer-Straße 30
97421 Schweinfurt
Germany
Tel. +(49) 9721 91-0
Fax +(49) 9721 91-3435
faginfo@schaeffler.com

Saudi Arabia

Schaeffler Middle East FZE
Road SE101, Schaeffler Building
Jebel Ali Free Zone – Southside
Postbox 261808
Dubai UAE
United Arab Emirates
Tel. +(971) 4 81 44 500
Fax +(971) 4 81 44 601
info.ae@schaeffler.com

Senegal

Schaeffler Technologies GmbH & Co. KG
Georg-Schäfer-Straße 30
97421 Schweinfurt
Germany
Tel. +(49) 9721 91-0
Fax +(49) 9721 91-3435
faginfo@schaeffler.com

Serbia

Schaeffler Technologies
Repräsentanz Serbien
Branka Krsmanovica 12
11118 Beograd
Tel. +(381) 11 308 87 82
Fax +(381) 11 308 87 75
fagbgdyu@sezampro.yu

Seychelles

Schaeffler Technologies GmbH & Co. KG
Georg-Schäfer-Straße 30
97421 Schweinfurt
Germany
Tel. +(49) 9721 91-0
Fax +(49) 9721 91-3435
faginfo@schaeffler.com

Sierra Leone

Schaeffler Technologies GmbH & Co. KG
Georg-Schäfer-Straße 30
97421 Schweinfurt
Germany
Tel. +(49) 9721 91-0
Fax +(49) 9721 91-3435
faginfo@schaeffler.com

Singapore

Schaeffler (Singapore) Pte. Ltd.
151 Lorong Chuan, #06-01
New Tech Park, Lobby A
556741 Singapore
Tel. +(65) 6540 8600
Fax +(65) 6540 8668
info.sg@schaeffler.com

Slovak Republic

Schaeffler Slovensko, spol. s r.o.
Ulica Dr. G. Schaefflera 1
02401 Kysucké Nové Mesto
Tel. +(421) 41 4 20 59 11
Fax +(421) 41 4 20 59 18
info.sk@schaeffler.com

Schaeffler Slovensko, spol. s r.o.
Nevädzova 5
821 01 Bratislava
Tel. +(421) 2 43 294 260
Fax +(421) 2 48 287 820
info.sk@schaeffler.com

Slovenia

Schaeffler Slovenija d.o.o.
Glavni trg 17/b
2000 Maribor
Tel. +(386) 2 22 82 070
Fax +(386) 2 22 82 075
info@schaeffler.si

Solomon Islands

Schaeffler New Zealand
(Unit R, Cain Commercial Centre)
20 Cain Road
1135 Penrose
New Zealand
Tel. +(64) 9 583 1280
+(64) 021 324 247
(Call out fee applies)
Fax +(64) 9 583 1288
sales.nz@schaeffler.com

Somalia

Schaeffler Technologies GmbH & Co. KG
Georg-Schäfer-Straße 30
97421 Schweinfurt
Germany
Tel. +(49) 9721 91-0
Fax +(49) 9721 91-3435
faginfo@schaeffler.com

Addresses

South Africa

Schaeffler South Africa (Pty.) Ltd.
1 End Street Ext. Corner Heidelberg Road
2000 Johannesburg
Tel. +(27) 11 225 3000
Fax +(27) 11 334 1755
info.co.za@schaeffler.com

Schaeffler South Africa (Pty.) Ltd.
58-64 Burman Road
Deal Party Estate
6012 Port Elizabeth
Tel. +(27) 41 407 5000
Fax +(27) 41 407 5109
info-za@schaeffler.com

Spain

Schaeffler Iberia, s.l.u. –
División Industria
C/ Foment, 2
Polígono Ind. Pont Reixat
08960 Sant Just Desvern – Barcelona
Tel. +(34) 93 4 80 34 10
Fax +(34) 93 3 72 92 50
info.es@schaeffler.com

Sri Lanka

Schaeffler Technologies GmbH & Co. KG
Georg-Schäfer-Straße 30
97421 Schweinfurt
Germany
Tel. +(49) 9721 91-0
Fax +(49) 9721 91-3435
faginfo@schaeffler.com

St. Kitts and Nevis

FAG Interamericana
2655 Le Jeune Rd.
Gable International Plaza
Suite #319
Coral Gables, FL 33134
USA
Tel. +(1) 305 779 4807
Fax +(1) 305 779 4808
Alejandro.Troetsch@schaeffler.com

St. Lucia

FAG Interamericana
2655 Le Jeune Rd.
Gable International Plaza
Suite #319
Coral Gables, FL 33134
USA
Tel. +(1) 305 779 4807
Fax +(1) 305 779 4808
Alejandro.Troetsch@schaeffler.com

St. Vincent and the Grenadines

FAG Interamericana
2655 Le Jeune Rd.
Gable International Plaza
Suite #319
Coral Gables, FL 33134
USA
Tel. +(1) 305 779 4807
Fax +(1) 305 779 4808
Alejandro.Troetsch@schaeffler.com

Sudan

Schaeffler Technologies GmbH & Co. KG
Georg-Schäfer-Straße 30
97421 Schweinfurt
Germany
Tel. +(49) 9721 91-0
Fax +(49) 9721 91-3435
faginfo@schaeffler.com

Surinam

Schaeffler Brasil Ltda.
Av. Independência, 3500-A
Bairro Éden
18087-101 Sorocaba, SP
Brazil
Tel. 0800 11 10 29
Fax +(55) 15 33 35 19 60
sac.br@schaeffler.com

Swaziland

Schaeffler South Africa (Pty.) Ltd.
1 End Street Ext. Corner Heidelberg Road
2000 Johannesburg
South Africa
Tel. +(27) 11 225 3000
Fax +(27) 11 334 1755
info.co.za@schaeffler.com

Sweden

Schaeffler Sverige AB
Charles gata 10
195 61 Arlandastad
Tel. +(46) 8 59 51 09 00
Fax +(46) 8 59 51 09 60
info.se@schaeffler.com

Switzerland

HYDREL GmbH
Badstrasse 14
8590 Romanshorn
Tel. +(41) 71 4 66 66 66
Fax +(41) 71 4 66 63 33
info.ch@schaeffler.com

Syria

Schaeffler Technologies GmbH & Co. KG
Georg-Schäfer-Straße 30
97421 Schweinfurt
Germany
Tel. +(49) 9721 91-0
Fax +(49) 9721 91-3435
faginfo@schaeffler.com

Tadzhikistan

Schaeffler Russland GmbH
Leningradsky Prospekt 47, Bau 3
Business-Center Avion
125167 Moscow
Russia
Tel. +(7) 495 7 37 76 60
Fax +(7) 495 7 37 76 61
info.ru@schaeffler.com

Tanzania

Schaeffler Technologies GmbH & Co. KG
Georg-Schäfer-Straße 30
97421 Schweinfurt
Germany
Tel. +(49) 9721 91-0
Fax +(49) 9721 91-3435
faginfo@schaeffler.com

Thailand

Schaeffler (Thailand) Co., Ltd.
388 Exchange Tower, 34th Floor
Sukhumvit Road, Klongtoey
Bangkok, 10110
Tel. +(66) 2697 0000
Fax +(66) 2697 0001
info.th@schaeffler.com

Togo

Schaeffler Technologies GmbH & Co. KG
Georg-Schäfer-Straße 30
97421 Schweinfurt
Germany
Tel. +(49) 9721 91-0
Fax +(49) 9721 91-3435
faginfo@schaeffler.com

Tonga

Schaeffler New Zealand
(Unit R, Cain Commercial Centre)
20 Cain Road
1135 Penrose
New Zealand
Tel. +(64) 9 583 1280
+(64) 021 324 247
(Call out fee applies)
Fax +(64) 9 583 1288
sales.nz@schaeffler.com

Trinidad and Tobago

INA México, S.A. de C.V. -
Rodamientos FAG, S.A. de C.V.
Henry Ford #141
Col. Bondojito
Deleg. Gustavo A. Madero
07850 Mexico D.F.
Mexico
Tel. +(52) 55 5062 6085
Fax +(52) 55 5739 5850
distr.indl.mx@schaeffler.com

Turkey

Schaeffler Rulmanlari Ticaret Limited
Sirketi
Aydin Sokak Dagli Apt. 4/4
1. Levent
34340 Istanbul
Tel. +(90) 212 2 79 27 41
+(90) 212 280 77 98
Fax +(90) 212 281 66 45
+(90) 212 280 94 45
info.tr@schaeffler.com

Turkmenistan

Schaeffler Russland GmbH
Leningradsky Prospekt 47, Bau 3
Business-Center Avion
125167 Moscow
Russia
Tel. +(7) 495 7 37 76 60
Fax +(7) 495 7 37 76 61
info.ru@schaeffler.com

Schaeffler Russland GmbH -
Automotive Aftermarket
Leningradsky Prospekt 47, Bau 3
Business-Center Avion
125167 Moscow
Russia
Tel. +(7) 495 73776-60
Fax +(7) 495 73776 61
info.ru@schaeffler.com

Tuvalu

Schaeffler New Zealand
(Unit R, Cain Commercial Centre)
20 Cain Road
1135 Penrose
New Zealand
Tel. +(64) 9 583 1280
+(64) 021 324 247
(Call out fee applies)
Fax +(64) 9 583 1288
sales.nz@schaeffler.com

Uganda

Schaeffler Technologies GmbH & Co. KG
Georg-Schäfer-Straße 30
97421 Schweinfurt
Germany
Tel. +(49) 9721 91-0
Fax +(49) 9721 91-3435
faginfo@schaeffler.com

UAE United Arab Emirates

Schaeffler Middle East FZE
Road SE101, Schaeffler Building
Jebel Ali Free Zone – Southside
Postbox 261808
Dubai UAE
Tel. +(971) 4 81 44 500
Fax +(971) 4 81 44 601
info.ae@schaeffler.com

Ukraine

Schaeffler Ukraine GmbH
Zhylyanskaya Str. 75, 5. Stock,
Businesscenter «Eurasia»
01032 Kiew
Tel. +(380) 44 520 13 80
Fax +(380) 44 520 13 81
info.ua@schaeffler.com

TOV Schaeffler Ukraine
Jilyanskayastr. 75, 5-er Stock
Bussines Center «Eurasia»
01032 Kiew
Tel. +(380) 44-5201380
Fax +(380) 44-5201381
info.ua@schaeffler.com

United Kingdom

Schaeffler (UK) Ltd
Forge Lane, Minworth
Sutton Coldfield B76 1AP
Tel. +(44) 121 3 13 58 70
Fax +(44) 121 3 13 00 80
info.uk@schaeffler.com

LuK (UK) Ltd.
Waleswood Road Wales Bar
Sheffield S26 5PN
Tel. +(44) 19 09 51 05 00
Fax +(44) 19 09 51 51 51
www.luk.co.uk

Uruguay

Schaeffler Argentina S.r.l.
Av. Alvarez Jonte 1938
C1416EXR Buenos Aires
Argentina
Tel. +(54) 11 40 16 15 00
Fax +(54) 11 45 82 33 20
info-ar@schaeffler.com

USA

Schaeffler Group USA Inc.
200 Park Avenue
P.O. Box 1933
Danbury, CT 06813-1933
Tel. +(1) 203 790 5474
Fax +(1) 203 830 8171
Walter.Newton@schaeffler.com

The Barden Corporation
200 Park Avenue
P.O. Box 2449
Danbury, CT 06813-2449
Tel. +(1) 203 744 2211
Fax +(1) 203 744 3756
sales@bardenbearings.com

Schaeffler Group USA Inc.
308 Springhill Farm Road
Corporate Offices
Fort Mill, SC 29715
Tel. +(1) 803 548 8500
Fax +(1) 803 548 8599
info.us@schaeffler.com

Schaeffler Group USA Inc.
5370 Wegman Drive
Valley City, OH 44280-9700
Tel. +(1) 800 274 5001
Fax +(1) 330 273 3522
luk-ina-fag-as.us@schaeffler.com

Uzbekistan

Schaeffler Russland GmbH
Leningradsky Prospekt 47, Bau 3
Business-Center Avion
125167 Moscow
Russia
Tel. +(7) 495 7 37 76 60
Fax +(7) 495 7 37 76 61
info.ru@schaeffler.com

Schaeffler Russland GmbH -
Automotive Aftermarket
Leningradsky Prospekt 47, Bau 3
Business-Center Avion
125167 Moscow
Russia
Tel. +(7) 495 73776-60
Fax +(7) 495 73776 61
info.ru@schaeffler.com

Vanuatu

Schaeffler New Zealand
(Unit R, Cain Commercial Centre)
20 Cain Road
1135 Penrose
New Zealand
Tel. +(64) 9 583 1280
+(64) 021 324 247
(Call out fee applies)
Fax +(64) 9 583 1288
sales.nz@schaeffler.com

Venezuela

Schaeffler Venezuela C.A.
Urbanización San José de Tarbes
Torre BOD, Piso 14, Oficina 14-1
Valencia
Tel. +(58) 58 241 825 9250
Fax +(58) 58 241 825 9705
ana.acevedo@schaeffler.com

Vietnam

Schaeffler Vietnam Co., Ltd –
Ho Chi Minh Sales Office
6th Floor, TMS Building.
172 Hai Ba Trung street, Da Kao Ward,
District 1.
Ho Chi Minh City
Tel. +(84) 8 22 20 2777
Fax +(84) 8 22 20 2776
marketing_vn@schaeffler.com

Schaeffler Vietnam Co., Ltd –
Hanoi Sales Office
Charm Vit Tower, 18th Floor
No. 117 Tran Duy Hung Street,
Cau Giay District
Ha Noi
Tel. +(84) 4 3556 0930
Fax +(84) 4 3556 0931
marketing_vn@schaeffler.com

Zambia

Schaeffler Technologies GmbH & Co. KG
Georg-Schäfer-Straße 30
97421 Schweinfurt
Germany
Tel. +(49) 9721 91-0
Fax +(49) 9721 91-3435
faginfo@schaeffler.com

Zimbabwe

Schaeffler Technologies GmbH & Co. KG
Georg-Schäfer-Straße 30
97421 Schweinfurt
Germany
Tel. +(49) 9721 91-0
Fax +(49) 9721 91-3435
faginfo@schaeffler.com

Schaeffler Technologies GmbH & Co. KG

Linear Technology Division
Berliner Straße 134
66424 Homburg/Saar
Germany
Internet www.ina.com
E-mail info.linear@schaeffler.com

In Germany:
Phone 0180 5003872
Fax 0180 5003873

From other countries:
Phone +49 6841 701-0
Fax +49 6841 701-2625

MATNR 083780076-0000 / AL 1 / GB-D / 201408